GALVESTON COUNTY

RULES, REGULATIONS AND REQUIREMENTS RELATING TO THE APPROVAL AND ACCEPTANCE OF IMPROVEMENTS IN SUBDIVISIONS OR RE-SUBDIVISIONS

GALVESTON COUNTY
ENGINEERING DEPARTMENT

MARCH 3, 1997
Amendment No. 1, effective October 3, 2005

ORIGINAL REGULATIONS EFFECTIVE MARCH 3, 1997 MAY BE FOUND ON FILM CODE #300-20-2062-300-20-271 OF THE OFFICIAL PUBLIC RECORDS OF THE COMMISSIONERS' COURT FOUND IN THE OFFICE OF THE COUNTY CLERK OF GALVESTON COUNTY, TEXAS

TABLE OF CONTENTS

SECTION	TITLE	PAGE
I	ADMINISTRATIVE PROCEDURES IN THE REVIEW OF SUBDIVISION PLATS AND CONSTRUCTION DRAWINGS	1
II	DRAWING REQUIREMENTS	23
III	DRAINAGE DESIGN REQUIREMENTS	27
IV	PAVING DESIGN REQUIREMENTS	50
V	STRUCTURES	60
VI	INSPECTION	62
VII	TESTING REQUIREMENTS	64
VIII	ACCEPTANCE OF IMPROVEMENTS WITHIN SUBDIVISIONS	71
IX	PAVING & DRAINAGE, STANDARD DRAWINGS	75

SECTION I

ADMINISTRATIVE PROCEDURES IN THE REVIEW OF SUBDIVISION PLATS AND CONSTRUCTION DRAWINGS

A. Administrative Procedures in the Review of Subdivision Plats and Construction Drawings.

Note: For properties located within the extraterritorial jurisdiction (ETJ) of an incorporated city or town and subject to the jurisdiction of the Planning and Zoning Commission of that city or town, general subdivision design criteria and layout requirements as established by the applicable Commission will apply.

1. Preliminary plat and preliminary drawings, five copies, to be submitted to the applicable Galveston County Drainage District and County Engineering Department for review and recommendations for changes to conform to their requirements, if necessary. Abutting owners and property lines will be shown. A table showing the acreage in each tract and total acreage will be shown.

2. Final plat shall be submitted complete with drawings and specifications including details, cross-sections and profiles showing line and grade of all streets, roads, bridges, sewers, ditches, utility easements and the course and location of existing pipelines or pipeline easements through such proposed subdivision (five copies). The design engineer shall furnish the proposed location of sewage disposal facilities and the source of water supply.

3. The final plat and drawings will be reviewed and the drawings either will be approved or recommendations made for further changes.

4. Upon approval of the plat and drawings by the County Engineer's Office, the final plat pursuant to plat recordation requirements will be submitted to Commissioners' Court for approval and will be delivered by Galveston County personnel to the County Clerk's Office for recording in the Map Records of Galveston County, Texas. The plat will be recorded by the County Clerk upon receipt of the required fee. The plat will be a maximum size of 24" x 36", be the original mylar signed with black non water soluble ink and contain a graphic scale. No sepias are acceptable.

   The owner of the subdivision is required to post a bond or make a financial guarantee in lieu of the bond before the plat may be approved by the Commissioners' Court.

5. After recordation and before construction begins on the subdivision, the proper development permits will be obtained from the Galveston Floodplain Administrator.

B. PLAT RECORDATION REQUIREMENTS

The original plat drawing submitted to the County Engineering Department prior to approval by Commissioners' Court and recordation in the Galveston County Map Records is required to be accompanied by the following:

1. A title report, statement, or opinion, title policy or certificate or letter from a title company authorized to do business in the State of Texas or an attorney licensed as such in the State of Texas must be provided indicating ownership of the property, all liens against same, and any easements; said title information shall not have been executed more than sixty (60) days prior to the time the plat is received in the County Engineering Department.

2. A certificate from each tax collector of a political subdivision in which the property is located showing that all taxes owed to the County, School District, Utility District and/or any other political subdivision have been paid in full to date.

3. A letter to the County Engineer, signed by the County Health Officer, certifying that the subdivision's water and sewage treatment system has been approved in accordance with the requirements of the Texas Department of Health and existing laws.

4. A letter from the County Tax Assessor-Collector certifying that the name of the subdivision to be presented to the Commissioners' Court is not in conflict with any other subdivision previously recorded; this requirement applies to the first section only of multi-section subdivisions and is not applicable to street dedication plats designated by the street name.

5. If a portion of the plat lies within the 100-year floodplain, a letter is required from the developer/owner stating he is aware of the fact and will advise all prospective property owners of the fact. The same will apply to the 100-year floodway.

6. Two sets of approved construction drawings are to be on file in the County Engineering Department at the time the plat is submitted to Commissioners' Court; however, in the event a tract of land is being platted to create reserves for the purposes of sale only and there are no immediate plans for construction of improvements on said reserves, then a note shall be placed on the face of the plat stating the following:

"site drainage drawings for the future development of this reserve must be approved by the applicable Galveston County Drainage District and Galveston County Engineering Department."

7. A letter, statement or other instrument from the owner of any privately owned easement or fee strip within the plat boundaries where such easements or fee strips are proposed to be crossed by streets (either public or private) or public utility or drainage easements, stating that the owner of such easement or fee strip approves such crossing of the private easement or fee strip for the purposes intended and depicted upon the plat.

8. A bond with the owner of the subdivision named as Principal, this bond shall:

   8.1 be made payable to the County Judge and the Judge's successor(s) in office;
   8.2 be in the total amount of proposed paving and appurtenant drainage improvements;
   8.3 be executed with sureties as may be approved by the court;
   8.4 be executed by a company authorized to do business as a surety in this state; and
   8.5 be conditioned that the roads and streets will be constructed in accordance with the specifications adopted by Commissioners' Court; in the event that all paving and drainage improvements have not been constructed and accepted within three years from the date of plat recordation, the owner of the subdivision shall provide Galveston County with an equivalent substitute bond.
   8.6 The bond will be reviewed and approved by the County Legal Department.

9. In lieu of a bond an owner may deposit cash or a letter of credit issued by a federally insured financial institution. If a letter of credit is used, it must:

   A. list as the sole beneficiary the County Judge of Galveston County, and

   B. be conditioned that the owner of the tract of land to be subdivided will construct any roads, streets and drainage in the subdivision:

      1. in accordance with the specifications adopted by the Commissioner's Court; and

      2. within a reasonable time as set by the Commissioners' Court.

10. Additional information may be required by the County Engineering Department to clarify or support any of the aforementioned requirements.

11. A letter from the developer stating if street lighting is installed he is aware that he will have to pay the installation, maintenance, and monthly usage costs.

12. A letter from the developer stating if sidewalks and landscape berms or medians are installed he is aware that he will have to pay the installation and maintenance costs.

13. A letter from the developer stating he is aware that all other requirements and permits are his responsibility including, but not limited to, Corps permits for work in wetlands or navigable waters, EPA, CMP, GLO, Texas Attorney General, TNRCC, local and state health agencies.

14. If any portion of a proposed or planned street, collector or thoroughfare traverses any part of the land being subdivided, that portion of the street at the proposed ROW width shall be incorporated into the subdivision plan and shall be dedicated to the appropriate governmental entity.

15. If any portion of a proposed ditch, channel or drainage improvement traverses any part of the land being subdivided, that portion of the ditch, channel or drainage improvement as planned, at the proposed ROW width, shall be incorporated into the subdivision plan and shall be dedicated or conveyed to the appropriate governmental entity.

16. If the proposed subdivision necessitates the need for a FEMA FIRM or Floodway map amendment or revision the developer shall provide the engineering and all costs for these. The amendment or revision shall be completed and approved by FEMA before the subdivision can be approved.

17. All development shall conform to FEMA's National Flood Insurance Program and Related Regulations which have been adopted by Galveston County as a requirement to participate in the National Flood Insurance Program.

18. All development shall conform to the County Dune Protection & Beach Access Rules.

19. The State of Texas Engineering Practice Act should be reviewed in conjunction with these regulations.

20. The State of Texas Professional Land Surveying Practices Act should be reviewed in conjunction with these regulations.

21. No building permits will be issued in any subdivision until the road and drainage have been constructed per the approved plans and specifications and inspected and accepted by the county for compliance with the same.

22. All development shall conform to the State’s Coastal Management Plan.

C. PLAT DEDICATION STATEMENTS AND CERTIFICATES

OWNERS ACKNOWLEDGEMENT

EXAMPLE FORM

STATE OF TEXAS

COUNTY OF (Name of County in which plat is located)

We, (Name of owner or owners) acting by and through (Name and title of officer) being officers of (Name of company or corporation), owner (or owners) hereinafter referred to as Owners (whether one or more) of the (Number of acres) tract described in the above and foregoing map of (Name of subdivision or development), do hereby make and establish said subdivision and development plan of said property according to all lines, dedications, restrictions and notations on said maps or plat and hereby dedicate to the use of the public forever, all streets (except those streets designated as private streets), alleys, parks, water courses, drains, easements and public places shown thereon for the purposes and considerations therein expressed; and do hereby bind ourselves, our heirs, successors and assigns to warrant and forever defend the title to the land so dedicated.

FURTHER, Owners have dedicated and by these presents do dedicate to the use of the public for public utility purposes forever unobstructed aerial easements. The aerial easements shall extend horizontally an additional eleven feet, six inches (11' 6") for ten feet (10' 0") perimeter ground easements or five feet six inches (5' 6") for sixteen feet (16' 0") perimeter ground easements, from a plane sixteen feet (16' 0") above ground level upward, located adjacent to and adjoining said public utility easements that are designated with aerial easements (U.E. & A.E.) as indicated and depicted hereon, whereby the aerial easement totals twenty one feet, six inches (21' 6") in width.

FURTHER, Owners have dedicated and by these presents do dedicate to the use of the public for public utility purposes forever unobstructed aerial easements. The aerial easements shall extend horizontally an additional ten feet (10' 0") for ten feet (10' 0") back-to-back ground easements or seven feet (7' 0") for sixteen feet (16' 0") back-to-back ground easements, from a plane sixteen feet (16' 0") above ground level upward, located adjacent to both sides and adjoining said public utility easements that are designated with aerial easements (U.E. & A.E.) as indicated and depicted hereon, whereby the aerial easement totals thirty feet (30' 0") in width.

FURTHER, Owners do hereby declare that all parcels of land designated as lots on this plat are originally intended for the construction of residential dwelling units thereon (or the placement of mobile home subdivision) and shall be restricted for same under the terms and conditions of such restrictions filed separately.

FURTHER, Owners do hereby covenant and agree that all of the property within the boundaries of this plat shall be restricted to prevent the drainage of any septic tanks into any public or private street, road or alley or any drainage ditch, either directly or indirectly.

FURTHER, Owners do hereby dedicate to the public a strip of land thirty (30') feet wide on each side of the center line of any and all bayous, creeks, gullies, ravines, draws, sloughs or other natural drainage courses located in said plat, as easements for drainage purposes, giving the City of (Name of City), Galveston County, or any other governmental agency, the right to enter upon said easement at any and all times for the purpose of construction and maintenance of drainage facilities and structures.

FURTHER, Owners do hereby covenant and agree that all of the property within the boundaries of this plat and adjacent to any drainage easement, ditch, gully, creek or natural drainage way shall hereby be restricted to keep such drainage ways and easements clear of fences, buildings, planting and other obstructions to the operations and maintenance of the drainage facility and that such abutting property shall not be permitted to drain directly into this easement except by means of an approved drainage structure.

ADDITIONAL PARAGRAPHS TO BE ADDED AS APPROPRIATE AND AS FOLLOWS:

(When streets within the plat are to be developed without concrete pavement, gutters and storm sewers the following paragraph is appropriate:)

FURTHER, Owners do hereby covenant and agree that all of the property within the boundaries of this plat shall be restricted to provide that drainage structures under private driveways shall have a net drainage opening area of sufficient size to permit the free flow of water without backwater and in no instance have a drainage opening of less than one and three quarters (1-3/4) square feet (18" diameter) with culverts or bridges to be provided for all private driveways or walkways crossing such drainage facilities.

(When plat indicates building setback lines and public utility easements are to be established in adjacent acreage owned by the subdivider the following paragraph is appropriate:)

FURTHER, Owners do hereby certify that we are the owners of all property immediately adjacent to the boundaries of the above and foregoing plat of (name of subdivision) where building setback lines or public utility easements are to be established outside the boundaries of the above and foregoing plat and do hereby make and establish all building setback lines and dedicate to the use of the public forever all public utility easements shown in said adjacent acreage.

(When private streets are established within the plat the following paragraph is appropriate:)

FURTHER, Owners do hereby covenant and agree that those streets located within the boundaries of this plat specifically noted as private streets, shall be hereby established and maintained as private streets by the owners, heirs, successors and assigns to property located within the boundaries of this plat and always available for the general use of said owners and to the public for firemen, fire fighting equipment, police and other emergency vehicles of whatever nature at all times and do hereby bind ourselves, our heirs, successors and assigns to warrant and forever defend the title to the land so designated and established as private streets.

FURTHER, Owners certify and covenant that they have complied with or will comply with the existing Galveston County regulations heretofore on file with the Galveston County Engineer and adopted by the Commissioners' Court of Galveston County.

(When the acknowledgment is attached to replat under the provisions of Section 232.009, Local Government Code, the following paragraph is appropriate:)

FURTHER, the Owners hereby certify that this replat does not attempt to alter, amend, or remove any covenants or restrictions; we further certify that no portion of the preceding plat was limited by deed restriction to residential use for not more than two (2) residential units per lot.

EXECUTION OF OWNERS ACKNOWLEDGEMENT

EXAMPLE FORM

(When owner is an individual or individuals)

WITNESS my (or our) hand in the City of (Name of City), Texas, this (number) day of (month), (year).

(signature of owner or owners)
(Names to be printed)

(When owner is a company or corporation)

IN TESTIMONY WHEREOF, the (Name of Company) has caused these presents to be signed by (Name of President), its President, thereunto authorized, attested by its Secretary (or authorized trust officer), (Name of Secretary or authorized trust officer), and its common seal hereunto affixed this (number) day of (month), (year).

_____
(Name of Company)

By: (Signature of President)
President (print name)

or Attest: (Signature of Secretary authorized trust officer)
(print name)
Title

(affix corporate seal if appropriate)

Note: All owners' signatures shall be acknowledged by a Notary Public.

LIENHOLDERS ACKNOWLEDGEMENT AND SUBORDINATION STATEMENT

Note: Holders of all liens against the property being platted must execute the final plat or prepare separate instruments which shall be filed for record with the plat.

EXAMPLE FORM

I (or we), (Name of mortgagee or names of mortgagees), owner and holder (or owners and holders) of a lien (or liens) against the property described in the plat known as (name of plat), said lien (or liens) being evidenced by instrument of record in the Clerk's File No._____ of Galveston County, Texas, do hereby in all things subordinate our interest in said property to the purposes and effects of said plat and the dedications and restrictions shown herein to said plat and I (or we) hereby confirm that I am (or we are) the present owner (or owners) of said lien (or liens) and have not assigned the same nor any part thereof.

By: (Signature of Lienholder)
(Name to be printed)

Note: All lienholder signatures shall be acknowledged by a Notary Public.

NOTARY PUBLIC ACKNOWLEDGEMENT FOR ALL SIGNATURES

EXAMPLE FORM

STATE OF _____

COUNTY OF _____

BEFORE ME, the undersigned authority, on this day personally appeared (Names of persons signing the plat or instrument), (corporation titles if appropriate), known to me to be the persons whose names are subscribed to the foregoing instrument and acknowledged to me that they executed the same for the purposes and considerations therein expressed (add for corporations, "and in the capacity therein and herein stated, and as the act and deed of said corporation.")

GIVEN UNDER MY HAND AND SEAL OF OFFICE, this (number) day of (month), (year).

(Signature of Notary Public)
Notary Public in and for the State of

(Print Name)

(Affix Notary Seal)

My Commission expires:

_____

CERTIFICATE FOR SURVEYOR

EXAMPLE FORM

I, (name of surveyor), am authorized (or registered) under the laws of the State of Texas to practice the profession of surveying and hereby certify that the above subdivision is true and correct; was prepared from an actual survey of the property made under my supervision on the ground; that all boundary corners, angle points, points or curvature and other points of reference have been marked with iron (or other suitable permanent metal) pipes or rods having an outside diameter of not less than three quarter (3/4) inch and a length of not less than three (3) feet; and that the plat boundary corners have been tied to the nearest survey corner.

_____
(Signature of Surveyor)
(Print Name)

Texas Registration No._____
(Affix Seal)

CERTIFICATE FOR PLANNING AND ZONING COMMISSION

EXAMPLE FORM

This is to certify that the Planning and Zoning Commission of the City of _____, Texas has approved this plat (or instrument when appropriate) and subdivision of (name of subdivision) in conformance with the laws of the State of Texas and the ordinances of the City of _____ as shown hereon and authorized the recording of this plat (or instrument when appropriate) this (number), day of (month), (year).

Signature of the Chairman
By: or Vice Chairman
(Chairman or Vice Chairman)

Signature of Secretary
Director of Department of
By: Planning and Development
(Secretary)

(Affix Commission Seal)

CERTIFICATE FOR COUNTY ENGINEER FOR GALVESTON COUNTY

EXAMPLE FORM

I, (name of engineer), County Engineer of Galveston County, do hereby certify that the plat of this subdivision complies with all of the existing rules and regulations of this office as adopted by the Galveston County Commissioners' Court.

_____
(Print Name)
County Engineer

CERTIFICATE FOR GALVESTON COUNTY DRAINAGE DISTRICT

EXAMPLE FORM

I, (name of director), Director (or Chairman) of Galveston County Drainage District No._____, Galveston County, Texas, do hereby certify that the plat of this subdivision complies with requirements for drainage as adopted by the District.

_____
(Print Name)
Director (or Chairman)

CERTIFICATE FOR GALVESTON COUNTY SURVEYOR

EXAMPLE FORM

I, (Name of County Surveyor), Galveston County Surveyor, do hereby certify that the plat of this subdivision complies as to land ties as shown.

_____
(Print Name)
Galveston County Surveyor

CERTIFICATE FOR GALVESTON COUNTY COMMISSIONERS' COURT

EXAMPLE FORM

APPROVED for filing, wherein Galveston County assumes no obligation for drainage, streets, roads or making any other improvements in said subdivision.

_____	_____
(Print Name)	(Print Name)
Commissioner, Precinct No.___	County Judge

The above subdivision titled (name of subdivision) as mapped, approved by the Commissioners' Court of Galveston County, Texas, by order dated _____, 19____.

_____
(Print Name)
County Clerk
of Galveston County, Texas

COUNTY CLERK FILING ACKNOWLEDGEMENT STATEMENT

EXAMPLE FORM

I, (Name of County Clerk), County Clerk of Galveston County, Texas, do hereby certify that the written instrument was filed for record in my office on (date and month), (year), at (time) o'clock (a.m. or p.m.), and duly recorded on (date and month), (year), at (time) o'clock (a.m. or p.m.), in plat record _____ map number_____, Galveston County Map Records.

Witness my hand and seal of office, at Galveston, the day and date last above written.

_____
(Print Clerk's Name)

County Clerk of Galveston County, Texas

By:_____
Deputy

VACATION OF SUBDIVISION PLAT

EXAMPLE FORM

STATE OF TEXAS

COUNTY OF GALVESTON

KNOW ALL MEN BY THESE PRESENTS:

I (or we), (Name of owner or owners if individuals) or (Name of President and Secretary or authorized trust officer of a company or corporation), being the sole owner (owners) and proprietor of the following described property in (Name of City and County), Texas, to wit:

(Provide legal description of the property including, but not limited to, the acreage, the name of the recorded subdivision, the name of the Survey and Abstract Number, and recording references.)

do hereby desire and declare that said plat, subdivision and dedication thereon be vacated and canceled so as to convert all of said platted property to acreage tracts as same existed before such property was platted, subdivided and recorded.

(At this point any rights-of-way, easements or any other feature established in the subdivision being vacated which will not be canceled as a result of this vacation action should be described.)

AMENDING PLAT CERTIFICATES

Note: The following certificates and acknowledgments are requirements to be placed upon the face of all amending plats.

I, (name of surveyor), hereby certify that the following corrections were necessary to eliminate errors which appear on the plat of volume (number), page (number), of the Galveston County Map Records (or when applicable, film code numbers of the Map Records of Galveston County, Texas):

(Provide brief explanation of corrections required)

(Signature of surveyor)
(Print Name)

Texas Registration No.____

(Affix Seal)

I (we), name(s) of owner(s), owner(s) of the property directly affected by this amending plat, being lot(s)_____ out of the block(s) _____ as indicted hereon, do hereby consent to this amending plat for the purposes herein expressed.

(Signature of Owner(s)
(Print Name)

Note: All owners signatures shall be acknowledged by a Notary Public.

APPROVED BY THE (Name of City) PLANNING AND ZONING COMMISSION on (date, month and year).

(Signature of the Chairman or Vice Chairman)
(Print Name)

(Signature of Secretary-Director Dept of Planning & Development)
(Print Name)

(Affix Commission Seal)

APPROVED BY THE GALVESTON COUNTY ENGINEER on (date, month and year).

(Print Name)

_____

County Engineer

APPROVED BY THE GALVESTON COUNTY COMMISSIONERS' COURT on (date, month and year).

_____

(Print Name)
Commissioner, Precinct No.___

_____

(Print Name)
County Judge

SECTION II

DRAWING REQUIREMENTS

A. GENERAL

1. The Professional Engineer, registered in the State of Texas, is required to seal, date and sign each sheet of the drawings in accordance with rules set forth by the Texas State Board of Registration for Professional Engineers. The seal must reproduce on all sheets.

B. CONSTRUCTION PLANS

1. All projects shall be tied to National Geodetic Survey (NGS) Datum adjustment which matches the Federal Emergency Management Agency (FEMA) rate maps or the most current NGVD which matches the FEMA rate maps. In the event GPS surveying is used to establish bench marks, at least two references to bench marks relating to the FEMA rate maps must be identified. Equations may be used to translate other datum adjustments to the required adjustment.

2. Indicate right-of-way widths, pavement widths and thickness, type of roadway materials, curbs, intersection radii, curve data, stationing, existing and proposed utilities - type, location, etc. on each plan sheet.

3. Stationing must run from left to right except for short streets or lines originating from a major intersection where the full length can be shown on one sheet.

4. A North arrow is required on all sheets and should be generally oriented either upward or to the right.

5. Identify all adjacent property and owners, show all lot lines, property lines and rights-of-way lines, etc.

6. A cover sheet shall be required for all projects involving three or more plan and profile sheets. All plan sheet numbers should be included on the cover sheet or area map. A vicinity map should always be included to show the project location.

7. If a roadway exists where drawings are being prepared to improve or construct new pavement or to construct a utility, this roadway should be labeled as to its existing width, type of surfacing and base thickness if available without destruction of pavement.

8. A copy of the final plat should be included with the final drawings when the design drawings are submitted for final approval.

9. Drawings submitted for Galveston County approval shall be on mylar or linen.

10. Do not place match lines in intersections.

11. All utility lines four inches (4") in diameter or larger within the right-of-way or construction easement should be shown in the profile view. All utility lines, regardless of size, should be shown in the plan view. Resolve all known conflicts of proposed utilities with existing utilities.

12. Show flow line elevations and direction of flow of all existing ditches.

13. Show natural ground profiles at each right-of-way or easement line.

    13.1 Center line profiles of natural ground will be satisfactory for rights-of-way or easements except where there is a difference of 0.50 feet or more from one right-of-way or easement line to the other; in which case, dual profiles will be required.

14. Drawings for street and/or public improvements shall be standard 24"x 36" overall dimensions for all design in rights-of-way or easements.

15. Details of special structures not covered by approved standard drawings, such as stream and gully crossings, special manholes, etc., should be drawn with the horizontal and vertical scales equal to each other.

16. Drawings shall be drawn to accurate scale, showing proposed pavement typical cross sections and details, lines and grades, and all existing topography within the street rights-of-way; and at intersections, the cross street shall be shown at sufficient distance in each direction along the cross street for designing adequate street crossings.

17. Grades should be labeled for the top of the curb except at railroad crossings. Gutter elevation shall be shown at Railroad Crossings. Center line elevations are acceptable only on streets without curb and gutters.

18. Curb return elevations for turnouts shall be shown in the profile.

19. Station all esplanade noses, both existing and proposed.

20. The design of both roadways is required on all pavement sections with an esplanade.

21. Station all P.C.'s, P.T.'s, radius returns and grade change P.I.'s in the plan view. Station all radius returns and grade change P.I.'s in the profile with their respective elevations.

22. The standard scales permitted for plans and profiles of paving and utility drawings are as follows:

    22.1 Major thoroughfares or special intersections/ situations:

    1" = 2' Vertical; 1" = 20' Horizontal

    22.2 Minor streets:

    1" = 5' Vertical; 1" = 50' Horizontal
    or
    1" = 4' Vertical; 1" = 40' Horizontal

    (for reconstruction on minor streets, a larger scale may be required to show detail)

23. The above scales of paragraph 22.1 are the minimum, and larger scales may be used to show details of construction.

24. Deviations to these scales can only be allowed with the specific approval of the County Engineer.

25. In addition to the plan and profile sheets described above, where applicable, each set of construction drawings shall contain a separate key paving and drainage drawing and a key utility drawing indexing specific plan and profile sheets.

26. It is preferable that key overall layouts be drawn at a scale of 1" = 100' or 1" = 200'. Smaller scale may be used where appropriate for the project with prior approval.

27. Drafting principals, conventions, techniques shall be those generally recognized int contemporary literature, and in common practice in the engineering practice.

28. Graphic standards shall be in accordance with those currently used in common engineering practice.

SECTION III

DRAINAGE DESIGN REQUIREMENTS

DRAINAGE DESIGN REQUIREMENTS

A. General: All storm sewers and appurtenant construction shall conform to the City of Houston Department of Public Works and Engineering Standard Construction Details for Wastewater Collection, Water Lines, Storm Drainage and Street Paving (See section F2 of this chapter) and all subsequent revisions. Any storm sewers and sanitary sewers which are located underneath or within one (1) foot of the paving section shall be bedded and backfilled with cement stabilized sand which meets or exceeds minimum 100 psi and contains not less than 1-1/2 sack cement per ton of sand. Backfill with cement sand to within one (1) foot of subgrade. Water lines to be bedded and backfilled in accordance with City of Houston Technical Specifications.

Trench excavation shall comply with all provisions contained in Article 1015Q (Texas Civil Statutes, Annotated).

B. Requirements Unique to Major Thoroughfares

1. The high point of top of curb should be at or not more than 3" below finished grade and the gutter to slope to inlet on minimum 0.25% grade.

2. Paving elevations, grades and storm sewer design shall be such that not more than one traffic lane of water shall pond in the low gutter of curbed sections during a 25 year event rainfall.

3. Storm sewers shall be designed from the following criteria:

   A minimum 150' wide strip each side of and adjacent to the proposed road right-of-way shall be considered an impervious surface contributing runoff to the storm sewer and an in depth study of runoff and characteristics shall be made of all land areas contributing runoff to the roadway. The contributing runoff from all areas outside the two 150' wide strips shall be computed according to section C below.

C. General Design Requirements

1. Design Rainfall Intensities

   1.1 The 2-year storm, as derived from the National Weather Service Technical Paper 40 and Hydrometeorological Report 35 publications, shall be used for storm sewer and roadside ditch design in Galveston County. The 2-year rainfall intensity may be computed using the following equation:

$$i = \frac{b}{(d + TC)^e}$$

Where I = rainfall intensity (inches per hour)

TC = Time of Concentration (minutes)

b = 75.01; d = 16.2; e = 0.8315

For example, the rainfall intensity for an area that has a TC of 25 minutes would be 3.42 inches per hour.

1.2 Determination of Time of Concentration

Time of concentration can be calculated from the following formula:

$$TC=10a^{0.1761}+15$$

Where: TC = Time of Concentration (minutes)
a = the subarea in acres

For example, the Time of Concentration for a 2-acre subarea would be 26.3 minutes.

1.3 Rational Method

The Rational method calculates the peak runoff for a storm drain system using the following equation for runoff:

Q = Sum(CA)i

Where:

C = Runoff Coefficient

A = Area (acres)

i = Rainfall Intensity (inches per hour)

The rational method will be used for design on all storm sewered areas up to 600 acres in size. The Rational Method will be considered applicable for all storm sewered areas up to 1,200 acres and for areas served by roadside ditches to 500 acres in size.

1.3 Calculation of Runoff Coefficient

The runoff coefficient "C" values in the Rational Method formula will vary based on the land use. Land use types and "C" values which can be used are as follows:

Land Use Type	Runoff Coefficient
Residential Districts	
Lots more than 1/2 acre	0.35
Lots 1/4-1/2 acre	0.45
Lots less than 1/4 acre	0.55
Multi-Family Areas	
Less than 20 DU/AC	0.65
20 DU/AC or Greater	0.80
Business Districts	0.80
Industrial Districts	
Light Areas	0.65
Heavy Ares	0.75
Railroad Yard Areas	0.30
Parks/Open Areas	0.18

Alternatively, the runoff coefficient "C" in the Rational Method formula can be calculated from the equation:

$$C=0.6I_a+0.2$$

Where:

C=watershed coefficient

I_a=percent impervious area.

For example, if the percent impervious is 0.9, then the runoff coefficient would be 0.74.

If this alternate equation is used rather than the values tabulated above, the details of the computation of C are to be provided as part of the drainage calculations.

2. Offsite Flows: Runoff originating outside the development's limit, but entering the development's system, shall be designed at 1 cfs/acre or at a rate determined by complete study of the area using the Harris County Flood Control District Site Runoff Curves for a 25-year storm event (Figure 1).

In the event a swale ditch is needed to intercept runoff and direct it to the proper storm sewer system or drainage outfall ditch utilize the following guidelines:

2.1 Provide Contour Map showing area to be drained along with calculations to support ditch size and grades.

2.2 Locate in an easement sufficient in width to allow for proper maintenance operations. See drainage standard drawings.

3. Mapping Requirements: Provide a Contour Map and Drainage Area Map for all areas which are to be drained by the proposed drainage system.

4. Drainage Calculations and Roughness Coefficients: Submit drainage calculations to support line sizes and slopes. The "n" coefficient in Manning's Formula shall be 0.013 for concrete pipe and 0.024 for corrugated metal pipe.

5. Hydraulic Grade Line: A graphical plot and calculations of the hydraulic gradient shall be furnished by the design engineer. The hydraulic gradient shall be calculated assuming the top of the outfall pipe as the starting water surface. At drops in pipe invert, should the upstream pipe be higher than the hydraulic grade line, then the hydraulic grade line shall be recalculated assuming the starting water surface to be at the top of pipe at that point. For the design storm, the hydraulic gradient shall at all times be below the gutter line for all newly developed areas. For approved streets with ditch sections, the hydraulic gradient shall be 0.5' below the edge of pavement or natural ground elevation, whichever is lower.

6. Storm Sewer Pipe Sizes: The minimum size for storm sewers and inlet leads shall be twenty-four inches (24") inside diameter pipe or equivalent cross section area. Box culverts shall be at least 2' by 2'.

7. Storm Sewer Flow Velocities: Storm sewers shall be designed to have a minimum velocity of three feet per second (3'/sec) when flowing full. Storm sewers should be constructed to flow in subcritical hydraulic conditions if possible. Maximum velocities should not exceed 8 feet per second without use of energy dissipation downstream. Maximum velocities should not exceed 12 feet per second.

8. Storm Sewer Junctions: Larger pipes upstream should not flow into smaller pipes downstream unless construction constraints prohibit the use of a larger pipe downstream, or the improvement are outfalling into an existing system, or the upstream system is intended for use in detention.

Match crowns of pipe at any size change unless severe depth constraints prohibit.

9. Soil Borings and Bedding: For all storm sewers having a cross sectional area equivalent to a forty-two inch (42") inside diameter pipe or larger, soil borings with logs shall be made along the alignment of the storm sewer at intervals not to exceed five-hundred feet (500') and to a depth not less than three feet (3') below the flowline of the sewer. The required bedding of the storm sewer as determined from these soil borings shall be shown in the profile of each respective storm sewer. When the trench is opened, if in the judgement of the Design Engineer, conditions differ from the design bases, he may authorize changes in the bedding indicated on the drawings. Such changes shall be shown on the record drawings.

10. Roadside Ditches:

10.1 Design Flows: The rainfall runoff criteria shall be determined based on the projected land use, and the rational method as described above. The design storm event for the roadside ditches shall be a 2-year rainfall. Design capacity for a roadside ditch shall be to 0.5 feet below the edge of pavement or the natural ground at the right-of-way line, whichever is lower. The design must include and extreme event analysis to indicate that structures will not be flooded.

10.2 Slide Slopes: The minimum preferred unlined or unimproved roadside ditch section should have a side slope no steeper than three (3) horizontal to one (1) vertical configuration. Steeper slopes will be allowed when the existing right of way is limited or other construction features dictate the design. The steepest slope shall not exceed two (2) horizontal to one (1) vertical.

10.3 Bottom widths: The minimum bottom width for roadside ditches should be two fee (2') unless design hydraulics will support a narrower or vee ditch configuration.

10.4 Roughness Coefficients: The "n" coefficient in Manning's Formula for ditch calculations shall be based on the surface treatment of the completed channel section with 0.040 as the minimum coefficient for unlined dirt ditches and 0.025 for ditches with paved inverts.

10.5 Flowline Slope: The minimum grade or slope of roadside ditches shall be 0.10 percent (0.1 foot per 100 feet).

For grass lined sections, the maximum design velocity shall be 3.0 feet per second during the design event.

10.6 Allowable Depth: The minimum depth of roadside ditches shall be eighteen inches (18") from the top of the pavement, and the maximum depth shall be not more than four feet (4'). Extreme conditions may warrant a deeper ditch, specific approval of which must be obtained from the County Engineer.

10.7 Culvert Capacity: Culverts will be placed at all driveway and roadway crossings, and other locations where appropriate. A graphic plot and calculations of the hydraulic gradient employing culvert design parameters shall be shown for each drainage ditch section and shall be 0.50' below the edge of pavement or natural ground elevation, whichever is lower. Head losses in culverts shall conform to TxDOT Hydraulic Manual, Chapter 4-Culverts, or equivalent. Culverts will be designed assuming inlet control.

10.8 Culvert Size: The minimum size culvert shall have a cross section area equal to or greater than an eighteen-inch (18") inside diameter pipe. Roadside culverts are to be sized based on drainage area. Calculations are to be provided for each block based on drainage calculations. Pipe culverts shall conform to ASTM Specifications C-76, Class III, for reinforced concrete pipe. All proposed and reasonably expected future culverts shall be included in the hydraulic profile. The size of culvert used shall not create an additional head loss of more than 0.20' greater than the normal water surface profile prior to placement of the culvert. All driveways to have culverts; no paved dips for driveways.

10.9 Erosion Protection: Erosion control methods acceptable to the County Engineer shall be utilized in ditch designs where the velocities of flow are calculated to be greater than five feet (5') per second or where soil conditions indicate their need. All ditches and channels require seeding, fertilizing, hydromulching with a short and long term grass in accordance with section K of this chapter. Ditch invert protection will be used at the upstream and downstream ends of all culverts.

10.10 Outfalls: Outfalls from storm sewers and ditches shall enter at the grade of the outfall ditch or in a manner acceptable to the applicable Galveston County Drainage District and Galveston County Engineer. If necessary, drop type outfall structures shall be used to prevent erosion.

10.11 Shoulder Width: The shoulder widths for roadways shall be a minimum of 6 feet (6') from the edge of pavement to the adjacent edge of ditch bank.

10.12 Right-of-way: The minimum distance between the right-of-way line and adjacent edge of the bank of ditch shall be two feet (2').

10.13 Storm Sewer Inlets: Storm water discharging from a ditch into a storm sewer system must be received by use of an approved structure (i.e., stubs with ring grate or type "E" Manholes. The capacity of type "E" inlet is 20 cfs.).

10.14 Lot Drainage: All side lot or back lot drainage facilities shall be underground storm sewers constructed in accordance with the specifications herein. Individual lot drainage shall be exempted from this requirement.

11. Major Channels: Major drainage ways through a subdivision shall be designed and constructed to accommodate the 100-year peak rate of runoff, in the manner prescribed by the applicable Galveston County Drainage District and the Galveston County Engineer. For channels with drainage areas of 300 acres or less, the site runoff curves (Figure 2) may be used. For larger drainage areas, a more detailed hydrologic analysis should be performed. A minimum of 20' to 30' maintenance berm is required on each side and must be seeded, mulched, and fertilized. If topsoil is needed to obtain a successful stand of grass, it shall be provided. Water surface elevation shall be calculated using Manning's Equation and the continuity equation. For the design storm event, the water surface should be calculated to remain within banks.

12. Major Channel Structures: If the developer proposes to construct major structures, such as box culverts or bridges across drainage channels, such structures shall conform to drawings and specifications of TxDOT as well as the County Engineer. See Section V.A-1, Structures. Head losses in culverts shall conform to TxDOT Hydraulic Manual, Chapter 4-Culverts, or equivalent. Generally, corrugated metal pipe will not be approved for permanent installation of culverts in Galveston County right-of-way except at railroad crossings.

D. Flood Plain Development Guidelines and Procedures

The following requirements shall apply to all developments planned within the 100-year flood plain:

1. Any construction and/or fill that would obstruct flow and cause any increase in flood levels must be fully offset with conveyance improvements.

2. Flood plain storage volumes shall not be reduced by way of fill. Where flood plain fill is proposed and is demonstrated not to adversely affect conveyance, compensatory storage equal in volume and effect shall be excavated.

Specific procedures to be followed for analysis of development proposed within the flood plain are outlined below:

1. The existing designated 100-year flood plain and floodway should be plotted on a map of the proposed development. The designated flood levels and floodway may be obtained from the Galveston County Engineering Department or the appropriate Galveston County Drainage District.

2. A hydraulic profile should be developed utilizing the HEC-2 computer program or other acceptable hydraulic modeling technique which provides a reasonable comparison with the designated flood levels and floodway.

3. The effect of the proposed development and the encroachment into the flood plain area should be incorporated into the hydraulic model and the resulting flood plain determined. Careful consideration should be given to providing an accurate modeling of effective flow areas taking into account the expansion and contraction of the flow.

4. The required channel improvements or other means of off-setting increases in flood plain elevations should then be incorporated into the hydraulic model. The resulting flood levels should be determined to verify that the improvements sufficiently offset the encroachment.

5. Once it has been determined that the proposed improvements adequately offset the encroachment, a revised floodway for the stream must be computed and delineated.

6. All hydraulic model data should be submitted with appropriate supporting information and computations to the Galveston County Engineer and/or the appropriate Galveston County Drainage District for review.

E. DOWNSTREAM IMPACT ANALYSIS

The following paragraphs describe general procedures to be used to determine the effect a proposed development has on downstream flood conditions.

General Criteria

The task of determining what downstream areas may be impacted by a proposed development is not an easy one. Varying rainfall patterns over a watershed and changing land-use conditions in other areas of the watershed may affect the extent and area of impact due to a proposed development. Also, developments of a similar nature located in different parts of a watershed may have different downstream impacts.

Because of these various factors and uncertainties, the criteria outlined below are general in nature. Specific projects should be closely coordinated with Galveston County Engineer and/or the appropriate Galveston County Drainage District from their inception in order to avoid costly revisions and delays in project completion.

The following are generally recommended criteria and procedures to be followed:

1. The location of the proposed project should be submitted by the project engineer to the Galveston County Engineer and/or the appropriate Galveston County Drainage District for comment.

2. The Galveston County Engineer and/or the appropriate Galveston County Drainage District will indicate the downstream areas which are considered to be of concern with respect to the potential impact of the proposed project.

3. The project engineer will then determine the impact on the areas of concern and present data to satisfy the Galveston County Engineer and/or the appropriate Galveston County Drainage District that no adverse impact will result.

To satisfy the Galveston County Engineer and/or the appropriate Galveston County Drainage District that no adverse impact will result, three potential courses of action may be followed:

1. Provide channel improvements through the area of concern which fully offset the increased flow rates caused by the proposed development, or;

2. A detention basin or other acceptable detention system may be designed to eliminate any increase in peak flow rates to the receiving stream, or;

3. A flood routing study may be performed which shows that the proposed project will not increase peak flow rates through the critical area under reasonable assumptions regarding rainfall distribution and land use within the watershed.

These three alternative courses of action are not intended to be mutually exclusive. A combination of solutions involving these approaches may be obtained. For example, a combination of some downstream channel improvements and detention storage may be used. A detailed routing study may show that the proposed development may increase downstream flow rates to a minor extent which may be compensated for by minor channel improvements or a small detention system. However, in lieu of a detailed routing study; the design of offsetting channel improvements or detention will be based on the assumption that the peak runoff rate from the proposed development occurs at the same time as the peak runoff rate for the receiving stream through the critical reach. The design of improvements under items (1) and (2) above shall follow the procedures in common engineering practice at that time.

Regarding routine studies to evaluate the impact on downstream critical reaches, the following general guidelines shall be followed:

1. Rainfall distribution over the watershed shall be in accordance with the HEC-1 default triangular distribution.

   However, the Galveston County Engineer and/or the appropriate Galveston County Drainage District may require additional analyses under different rainfall assumptions if it feels such analyses are warranted.

2. Channel improvements planned to be completed within a two-year period may be considered in the routine procedures.

3. Future land-use conditions within the watershed to be used in the routing study shall be defined by the Galveston County Engineer and/or appropriate Galveston County Drainage District.

4. Unless a alternative method is specifically approved by the Galveston County Engineer and/or the appropriate Galveston County Drainage District, the Corps of Engineers' HEC-1 program shall be used for performing the routing analysis. Optional routing methodologies should be reviewed with the Galveston County Engineer and/or the appropriate Galveston County Drainage District. Sub-area runoff computations and associated routing shall be performed on sub-areas which are of a size that allow reasonable determination of the timing of flows from the development in comparison with the overall timing of flood flows from the watershed. The sub-area breakdown, hydrograph coefficients, routing methodology, etc. should be submitted to the Galveston County Engineer and/or the appropriate Galveston County Drainage District for approval prior to performing detailed calculations.

F. Materials:

1. All storm sewers shall be constructed with reinforced concrete pipe, either precast pipe, box conduits or cast in place pipe. The use of corrugated galvanized metal pipe, or other approved equal, may be used only at the storm sewer outfall into unlined channels. The length of the outfall shall be determined on an individual basis as dictated by the construction requirements.

2. All storm sewer construction shall conform to the City of Houston, Department of Public Works and Engineering "Storm Sewer Standard Details Date 1996", City of Houston Drawings 02081-01 through 02081-10, 02084-02 through 02084-09,02317-03 through 02317-07, 02317-09, 02362-01 through 02362-10, 02633-01,06333-02,02641-01, 02642-01 and all subsequent revisions.

G. Storm Sewer Alignments

1. All cast in place concrete storm sewers shall follow the alignment of the right-of-way or easement.

2. All precast concrete pipe storm sewers should be designed in a straight line and tops of pipes should be matched at all pipe sized changes.

3. All storm sewer inlet leads shall be designed in a straight line.

4. Storm sewers shall be located in public street rights-of-way or in approved easements. Back lot easements are discouraged.

5. In all easements restricted to storm sewers, the pipe shall be centered within the limits of the easement. Minimum width of easement shall be 20 feet (20'). In the event of extreme depth and/or large sewers, additional width will be required to allow for proper maintenance operations. Bedding shall be provided in accordance with City of Houston requirements stated previously.

6. For storm sewers located in easements adjacent to public street rights-of-way, the minimum width of the easement shall be ten feet (10'). The minimum width shall be increased for larger pipe or conduit with the requirement that a minimum distance of five feet (5') shall be maintained from the easement line to the outside edge of the sewer, and a minimum distance of two feet (2') shall be maintained from the right-of-way line to the outside edge of the sewer pipe or conduit.

H. <u>Manholes shall be located at:</u>

1. All pipe size or cross section changes. Tops of pipe should be matched.

2. All pipe sewer intersections or P.I.'s.

3. All pipe sewer grade changes (precast pipe only).

4. All street intersections.

5. A maximum of seven-hundred feet (700') measured along the center line of the pipe sewer. Manholes are not required where inlet leads intersect a monolithic concrete storm sewer; however, manholes may be required as necessary to provide access for adequate maintenance of lead lines.

6. All inlet lead and conduit intersections with the pipe sewer where precast concrete pipe sewers are designed. Manholes are not required where inlet leads intersect a monolithic concrete storm sewer;however, manholes may be required as necessary to provide access for adequate maintenance of lead lines.

I. Inlets:

1. Shall be located at all low points on gutter gradient.

2. Inlet Spacing: Inlets must be spaced to serve the runoff calculated using the Rational Method as applied according to Section III.C of this document. Curb inlets shall be spaced so that the maximum travel distance of water in
the gutter will not exceed seven-hundred feet (700') one way for residential streets and three-hundred feet (300') one way on major thoroughfares and streets within commercial developments. It is preferable that curb inlets be located on intersecting side streets instead of major thoroughfares on all original designs or developments. Do not place inlets in circular portion of cul-de-sac streets unless special conditions warrant otherwise. Place inlets at the end of proposed pavement, if drainage will enter or leave pavement. Do not locate inlets adjacent to esplanade openings. Special conditions warranting other locations of curb inlets shall be determined on a case by case basis by the County Engineer.

3. Standard Inlet Type and Construction: Type "BB" Inlet or equal is to be used as a curb inlet on curbed streets. The capacity of a Type "BB" Inlet is 5 cfs and valley gutters are not permitted on public streets (public alleys exempted) on all original designs or developments. All inlets are to be constructed of brick masonry, cast concrete in place, or may be precast as approved by the County Engineer. Minimum lead size is 24".

4. Other Inlet Types: Certain instances may bring about the need for utilization of inlet types other than the standard "BB" and will be used only after receiving approval of the County Engineer. Do not use "Beehive" grate inlets or other "specialty" inlets. Do not use grate top inlets in unlined roadside ditch.

J. Consideration of Overland Flow

1. Design Frequency

The design frequencies for consideration of overland sheet flow will consider extreme storm events which exceed the capacity of the underground storm sewer system resulting in ponding and overland sheet flow through the development to the primary outlet.

2. Relationship of Structures to Street

All structures will be higher than the highest level of ponding anticipated resulting from the extreme event analysis.

3. Calculation of Flow

a. Streets will be designed so that consecutive high points in the street will provide for a gravity flow of drainage to the ultimate outlet.

b. The maximum depth of ponding at high points will be six inches above top of curb.

c. The maximum depth of ponding at low points will be 18 inches above top of curb.

d. Sheet flow between lots can be provided only through a defined drainage easement.

e. A map shall be provided to delineate extreme event flow direction through a proposed development and how this flow is discharged to the primary drainage outlet.

f. In areas where ponding occurs and no sheet flow path exists, then a calculation showing that runoff from the 100-year event can be conveyed and remain in compliance with the other terms of this section must be provided.

K. <u>Seeding and Fertilizing for Erosion Control</u>

1. Description

This item shall consist of preparing ground, providing and hydromulching seeds and fertilizer, rolling and other management practices along and across such areas that are required to be reseeded as designated as on the plans and in accordance with these specifications. A complete uniform and mowable stand of grass must result or the area will be immediately re-seeded until such is the result.

2. Materials

Seed: All seed must meet the requirements of the Texas Seed Law Including the labeling requirements for showing pure live seed (PLS=purity + germination) name and type of seed. Seed furnished shall be of previous season's crop and the date of analysis shown on each bag shall be within nine months of the time of use on the project.

Each variety of seed shall be furnished and delivered in separate bags or containers. A sample of each variety of seed shall be furnished for analysis and testing when directed by the Engineer. Seeding shall be a combination of Bermuda grass (hulled) at 15 lbs/acre and Rye grass 25 lbs/acre for a total of 40 lbs/acre.

Fertilizer: Fertilizer shall be delivered in bags or containers clearly labeled showing the analysis. The fertilizer is subject to testing In accordance with the Texas Fertilizer Law. Fertilizer that is powered or caked will be rejected. A pelleted or granulated fertilizer which has an analysis of 12-12-12, (percent of nitrogen, phosphoric acid, and potash nutrients) shall be uniformly applied at a rate of 830 lbs/acre. In the event it is necessary to substitute a fertilizer of different analysis, the total amount of nutrients furnished and applied per acre shall equal that specified for each nutrient. Any such substitutions shall be approved in advance by the Engineer.

Mulch: Mulch for use with hydraulic application of grass seed and fertilizer shall consist of specially prepared wood cellulose fiber or shredded paper fiber. It shall be processed in such a manner that it will not contain germination or growth inhibiting factors. It shall be dyed green to allow visual metering of its application. The fibers shall have the property of becoming evenly dispersed and suspended when agitated in water. When sprayed uniformly on the surface of the soil, the fibers shall form a blotter-like ground cover, which readily absorbs water, and allows infiltration to the underlying soil. Weight specifications from suppliers, and for all applications, shall refer only to air dry weight of the fiber, a standard equivalent to 10 percent moisture. The mulch material shall be supplied in packages having a gross weight not in excess of 100 pounds, and shall be marked by the manufacturer to show the air dry weight content. Suppliers shall be prepared to certify that laboratory and field testing of their product has been accomplished, and that it meets all of the foregoing requirements.

Topsoil: As needed 3" in depth spread and rolled on exposed slopes and other exposed areas.

The topsoil shall be fertile loam, easily cultivated and free from objectionable material, and shall have a relatively high erosion resistance and be readily able to support the growth of the planting, seeding or sodding specified.

The County shall be notified at least 2 weeks in advance of obtaining topsoil from any material source to permit inspection and to prepare for a necessary checking and measurement.

Trash, wood, brush, stumps and other objectionable materials encountered shall be removed and disposed of as directed by the Engineer prior to beginning of work required by this item. Material may be stockpiled in the designated areas only. The source and stockpile areas shall be kept drained, insofar as practicable, during the period of use. Trash, wood, brush, stumps and other objectionable materials must not be allowed to contaminate the stockpiled topsoil so the site must be cleared and cleaned by the Contractor prior to stockpiling the topsoil and kept clean while the job is in progress.

The selected topsoil material shall be used to improve designated areas for planting and seeding purposes.

The spreading of the topsoil shall be undertaken as soon as the grading operations have been completed. Topsoil shall be spread, so as to form a uniform cover 3 inches thick prior to rolling. After topsoil has been placed, shaped, and rolled it shall be seeded within 48 hours. The stockpile areas shall be cleaned, regraded to preconstruction condition, and seeded at that time.

3. Construction Methods

All exposed topsoil shall be seeded. All areas to be seeded shall be cultivated to a depth of 4 inches. The seed bed shall be firmed with a roller not exceeding 90 pounds for each foot of roller width and then cultivated sufficiently to reduce the soil to a state of good tilth when the soil particles on the surface are small enough and lie closely enough together to prevent the seed from being covered too deep for optimum germination. The proper cross-section shall be maintained throughout the process of cultivation and any necessary reshaping shall be done prior to any planting of seed.

Seeding and fertilizing shall be accomplished by hydromulching only.

The application of the mulch slurry shall be made with hydraulic equipment, which has a built-in agitation system with an operating capacity sufficient to

agitate, suspend and homogeneously mix slurry. The slurry distribution lines shall be large enough to prevent

stoppage and shall be equipped with hydraulic spray nozzles which provide even distribution of the slurry on the slopes to be seeded. The fiber mulch shall be applied at the rate of 2,000 pounds per acre in combination with water, fertilizer, and seed, and shall be sprayed over the soil in a uniform coat. The mulch shall be kept moist by daily application of water if necessary, until the seeds in the mulch have germinated and rooted in the soil and are visible growing above the soil surface.

4. Sprinkle Irrigation

Description

This item shall consist of providing and properly applying water on all seeded areas, and any other area as directed by the Engineer and as herein specified.

Materials

Water shall be clean and free of industrial wastes and other substances harmful to the growth of grass.

Construction Methods

This works shall be done within 24 hours after rolling the seed bed or as directed by the Engineer. The developer will furnish and operate sprinklers, nozzles, or other approved equipment which will insure the distribution of water in a uniform and controllable rate of application. The developer shall apply the water as necessary to cause the seed to germinate and sprout and without causing erosion or displacement of the topsoil.

5. Acceptance

Seeding shall not be accepted until the planted seed has germinated, rooted in the soil, and is visibly growing above the surface of the topsoil. The developer shall be responsible for the establishment and proper care of a stand of grass over the entire seeded area. It is the intent of these specifications to have a good, thick, mowable stand over the entire project and before final acceptance of same.

L. STRUCTURAL DESIGN CRITERIA

1. GENERAL

The structural design of flood control facilities encompasses all aspects of the design of modifications to existing channels and streams or new channels, from the selection of side slopes for earthen channels to major structures, such as bridges, culverts, drop structures, and retaining walls. Hydraulic structures should convey stormwater safely, control erosion, be cost effective, require minimal maintenance, and add safety and esthetics to the drainage system.

The intent of this section is to present recommended standard structural details and to outline the criteria and calculations required for approval of non-standard structures. Discussed in the sections to follow is the structural design of drainage channels (both lined and unlined), culverts, bridges, drop structures, closed conduits, backslope drains, sheet flow interceptors, and storm sewer outlets.

2. DESIGN CONSIDERATION

The structural design of any non-standard drainage structure will require an independent structural analysis in accordance with the recommendations of a geotechnical study. The construction drawings should include a scaled drawing of sufficient size of the particular structure with appropriate typical sections, dimensions, and construction specifications and notes. In the design of such structures, the following effects should be considered as minimum:

a. Lateral earth pressures.

b. Buoyant forces.

c. Bank stability, including channel bottom rotational stability, when designing vertical drop structures.

d. Scour and erosion forces.

e. Dead loads, live loads, and impact loads.

f. Wheel loadings in accordance with HS20-44.

g. Bearing capacity of soils.

h. Backfill effects, especially when expansive soils are involved.

i. Negative pressure at drop structure overflow nappe.

j. Fault lines.

k. Construction loadings

The latest applicable standards should always be used in the design of hydraulic structures.

Structures should generally be able to be built by local contractors using common construction techniques in the Galveston County area. Construction techniques not common to the area or patented building materials and processes should be avoided. Structures should also be designed so contract bidding will be competitive.

3. SOILS CONSIDERATIONS

General Geotechnical Requirements

A subsurface soils investigation should be an integral part of improvement projects in Galveston County, Texas. A detailed subsurface investigation should be made by taking soil samples and analyzing the samples for various conditions that will affect the structural integrity of proposed structures. The field effort should define soil stratifications and groundwater conditions. Soil borings will be required at a minimum of every 1,000 feet along a channel in which improvements are proposed as well as at all proposed major structures. Each boring should be a minimum of 1.5 times the proposed channel depth or conduit invert.

Galveston County is essentially divided into two broad zones with regard to the surface soils. Those areas, which lie generally on the Mainland, tend to be more clayey, while those generally on the Island and Peninsula tend to be sandier. A major problem with the sandy soils is that they are highly erosive. The clay soils tend to be very expansive and can generate large soil pressures on structures.

Channel Side Slope Stability

Laboratory test should be conducted to measure the undrained and drained shear strengths of appropriate soil strata and evaluate the grain size, permeability

and competence of cohesionless zones. Index testing can be utilized along with specific test results to select proper soil parameters. All tests should be performed in accordance with American Society for Testing and Materials (ASTM) procedures where appropriate.

Slope stability should be analyzed for the design cases as follows:

a. End of Construction Case, which models the initial undrained condition of the soil.

b. Long Term Design Case, which represents steady state piezometric and stress conditions. When a ditch slope is excavated, altered stress conditions create pore pressure changes within the slope and the undrained strength of the bank soils is mobilized. With time, the soil pore pressures adjust to the imposed stress and piezometric conditions, and the bank soils rely on their available strength for long term stability.

c. Rapid Dragdown Case, which models the condition where high flood waters saturate and piezometrically "load" a ditch slope, and then quickly recede leaving a large unbalance of piezometric head in the bank slope.

4. CHANNEL DESIGNS

General

Flood control channels vary widely in make-up from totally earthen channels where adequate right-of-way exists to totally concrete lined where right-of way is very limited. In some instances, the channel section is a combination of these two extremes. This section defines the parameters for the design of these various channel sections.

Earthen Channels

The most common flood control channel in Galveston County is a totally earthen channel. This is generally the most economical design except in the already developed areas where land costs are extremely high. The initial construction cost for a concrete lined channel is generally three to four times that of an earthen channel.

In the design of an earthen channel, consideration of long term maintenance has a very strong influence on design parameters. The following are minimum requirements to be used in the design of all earthen channels: Refer to Exhibit D-5-1.

a. Maximum earthen side slopes should be 3 (horizontal) to 1 (vertical). Slopes flatter than 3 to 1 may be necessary in some areas due to local soil conditions.

b. Minimum bottom width is six (6) feet.

c. A minimum maintenance berm is required on either side of the channel of between 20 to 30 feet depending on channel size. For top widths less than 60 feet, 20-foot berms are acceptable and for top widths more than 60 feet, 30-foot berms are required.

d. Backslope drains or interceptor structures are necessary at a minimum of 1,000 feet intervals to prevent sheet flow over the ditch slopes. A standard detail is presented in Exhibit D-5-2.

e. Channel slopes must be revegetated immediately after construction to minimize bank erosion.

f. Flow from roadside ditches must be conveyed to the channel through a roadside ditch interceptor structure and pipe (Exhibit D-5-3).

Concrete-Lined Trapezoidal Channels

In instances where flow velocities are excessive, channel confluences create a significant erosion potential, or right-of-way is limited, fully or partially concrete lined channels may be necessary. The degree of structural analysis required varies significantly depending on the intended purpose and the steepness of the slope on which paving is being placed.

Presented below are minimum requirements for partially and fully concrete lined trapezoidal channels (Exhibit D-5-4):

1. All slope paving should include a minimum 18-inch toe wall at the top and sides and a 24-inch toe wall across or along the channel bottom for clay soils. In sandy soils, a 36-inch toe wall is recommended across the channel bottom.

2. Fully lined cross-sections should have a minimum bottom width of eight (8) feet.

3. Concrete slope protection placed on 3:1 slopes should have a minimum thickness of 4 inches and 6 x 6 x W 2.9 x W2.9 welded wire fabric or equivalent reinforcing.

4. Concrete slope protection placed on 2:1 slopes should have a minimum thickness of 4-inches and 6 x 6 x W4.5 x W10 welded wire fabric or equivalent reinforcing.

5. Concrete slope protection placed on 1.5:1 slopes should have a minimum thickness of 5-inches and 4 x 4 x W4 x W10 reinforcement or equivalent. Poured in place concrete side slopes should not be steeper than 1.5:1.

6. In instances where the channel is fully lined, no backslope drainage structures are required. Partially lined channels will require backslope drainage structures as outlined.

7. Weep holes should be used to relieve hydrostatic head behind lined channel sections. Refer to Exhibit D-5-5.

8. Where construction is to take place under conditions of mud and/or standing water, a seal of slab of Class C concrete should be placed in channel bottom prior to placement of concrete slope paving. Refer to Exhibit D-5-4.

9. For bottom widths of twenty (20) feet and greater, transverse grade beams shall be installed at twenty (20) feet spacing on center. Grade beams shall be one foot wide, one foot-six inches deep, and run the width of the channel bottom. Refer to Exhibit D-5-4.

SECTION IV

PAVING DESIGN REQUIREMENTS

PAVING DESIGN REQUIREMENTS

General:

Both concrete pavement, flexible base pavement and the subgrade for both shall be designed and constructed in accordance with applicable "TxDOT Standard Specifications for the Construction of Roads and Bridges" (1993). Where conflicts occur, the requirements set forth in these guidelines shall supersede. Flex base shall be TxDOT Item 247 TyA, Grl.

Treatment of the subgrade shall be determined by a certified geotechnical engineer, accredited by the American Association for Laboratory Accreditation (A2LA). Recommendations(s) of the certified geotechnical engineer shall be adhered to unless the specified treatment is not consistent with conditions found during construction, at which time the geotechnical engineer will be required to make adjustments, as needed.

The following design requirements are applicable to all pavement under Galveston County's jurisdiction that is to be constructed by the development community.

A. Typical Sections

1. Roadway cross sections, curb and gutter streets, shall conform to "Geometric Design Guidelines for Subdivision Streets, Harris County and City of Houston" and any subsequent revisions thereto. MINIMUM R.O.W. IS 60'.

2. Roadway cross sections for streets with ditches:

   2.1 Major thoroughfares shall be two (2) divided traffic lanes of twenty-four (24') edge to edge for each lane with minimum six foot (6') shoulder on each side.

   2.2 Minimum width of the paving section for low density single family developments shall be twenty two feet (22') with a six foot (6') shoulder on each side. Thickness, cement content and reinforcement requirements, see IV.B-1 (below). All other roadways shall be designed in such a manner that the combined width of the paving and the shoulders is equal to or grater than the width requirements for a curb and gutter street with identical land use being planned for adjacent property. Thickness and reinforcement for such streets shall be seven inches (7") thick and

reinforced with #4 (1/2") bars 18" on center each way. In no case shall minimum width of roadway be less than 28 feet (28') edge to edge of paving in any development with the exception of Low Density Single Family Residential Subdivisions. The County shall determine which subdivisions are low density single family type.

B. Minimum Thickness and Reinforcement Requirements for Concrete Pavement

1. For pavement less than thirty feet (30') F/F of curb, the concrete pavement is to be a minimum of six inch (6") uniform thickness, 5.0 sacks of Portland Cement per cubic yard, reinforced with #4 (1/2") deformed steel reinforcing bars spaced a maximum of 18" center to center each way.

2. Pavement thickness and reinforcement for major thoroughfare streets shall be designed in accordance with item 5, below, and shall have minimum width of twenty-four feet (24') F/F of curb for each one-half of the roadway section. The concrete pavement shall be a minimum of 8" uniform thickness, 5.0 sacks of Portland Cement, reinforced with #4 (1/2") deformed steel reinforcing bars spaced a maximum of 18" center to center each way.

3. For all other curb and gutter streets, the concrete pavement shall be a minimum of 7" uniform thickness, 5.0 sacks of Portland Cement, reinforced with #4 (1/2") deformed steel reinforcing bars spaced 18" center to center each way.

4. All reinforcing steel shall conform to TxDOT Specifications Item 440, Reinforcing Steel.

5. In the event special circumstances and engineering analysis indicate the need of a stronger pavement than those listed above, pavement thickness and reinforcement shall be supported by design analysis. Design method and loading requirements shall conform to current TxDOT or AASHTO Methods.

C. Flexible Base Pavement with Ditches

1. Minimum thicknesses are as follows:

1.1 6" subgrade as specified in the applicable TxDOT Item 260 or Item 275.

1.2 8" of compacted base; crushed limestone, or approved equal(s). TxDOT Item 247, TyA, Grl.

1.3 1-1/2" of Hot Mix Hot Laid Asphaltic Concrete Pavement. TxDOT Item 340, TyD.

2. Flexible Base Pavement for all developments other than Low Density Single Family residential shall be supported by design analysis conducted by a certified geotechnical engineer. Recommendation of the geotechnical engineer shall be strictly followed. Design method and loading requirements shall conform to current TxDOT or AASHTO Methods.

3. Pavement Width:

3.1 Minimum shall be twenty two feet (22') edge to edge of paving with a six foot (6') shoulder on each side. (Low Density Single Family Residential).

3.2 Roadway widths shall be designed in accordance with criteria set forth in "Roadway Cross Sections for Streets with Ditches". See Section IV-A.

3.3 Ditch sections will follow requirements given under drainage.

D. Grade Design Requirements

1. Curb and Gutter Sections:

1.1 Minimum gradient on gutter shall be 0.25 percent.

1.2 Maximum drop of grade tangents from opposite directions to a common inlet shall be 1.5 feet.

1.3 The maximum allowable curb run to an inlet shall be seven hundred feet (700') one way for residential streets and three hundred feet (300') one way for major thoroughfares or streets within commercial developments.

1.4 Maximum cut from finished grade at property line to top of curb shall be 1.75 feet.

1.5 Minimum one percent (1%) fall around intersection turnout for a minimum radius of twenty-five feet (25'). Grade for larger radius shall be determined on an individual basis.

1.6 Vertical curves shall be installed when algebraic difference in grades exceeds one percent (1%). Elevations shall be shown at ten-foot (10') intervals through vertical curves.

1.7 Radius of cul-de-sac pavement:

7.1 Residential shall be a minimum of forty-two feet (42') to face of curb.

7.2 Commercial shall be a minimum of fifty feet (50') to face of curb.

1.8 When a curb and gutter intersects a drainage ditch, the grade of gutter shall be above the designed water surface of the ditch in accordance with requirements of Galveston County and the applicable Galveston County Drainage District.

1.9 Minimum grade for cul-de-sac shall be 0.60 percent along gutter.

1.10 Major thoroughfares shall be superelevated in accordance with sound engineering practice whenever the center line radius of lanes or rights-of-way are less than 2,000 feet.

1.11 For boulevard sections, the amount of cross slope over the pavement section should be shown on the drawings. The usual cross slope is one-fourth inch (1/4") per foot from curb line to curb line, and one-eighth-inch (1/8") per foot for left turn lanes and esplanade crossovers. For streets with single paving sections, the amount of cross slope over the pavement section shall be 1/4" per foot from center to edge of pavement.

1.12 A minimum gradient of 0.40 percent around the longest radius is required on an L-type street intersection.

1.13 When meeting an existing curbed street, top-of-curb grades should be laid to meet an elevation six inches (6") above the existing gutter, except at inlets.

1.14 Grades should be laid to match the top of the curb of an existing inlet.

1.15 Vertical curves should be labeled every ten feet (10'). Maintain minimum of 0.03 feet on ten-foot (10') intervals by altering the calculated elevations.

1.16 When the curb grades are not laid below the natural ground, fill lines shall be shown on the drawings and shall be of a sufficient height to insure a minimum of three-eighths-inch (3/8") per

foot transverse slope toward the curb from the property line between a point two feet (2') outside right-of-way and top of the curb. If this type fill is required and the pavement is adjacent to a non-participating property owner, fill easements from this property owner shall be obtained, filed, and a copy of the easements shall accompany the final drawings.

1.17 Grades should be labeled for all top of curbs except at railroad crossings. Center line grades are acceptable for approved streets with ditch sections only.

1.18 Gutter elevations are required for vertical curves where a railroad track is being crossed.

1.19 The gradient for tangents to vertical curves at railroad crossings shall be a maximum of 3.5 percent and 4.0 percent at bridges, box culverts and pedestrian tunnels.

1.20 Where railroad crossings are not at right angles to the pavement slab, vertical curves should be calculated for each curb line and should be posted at ten-foot (10') intervals in the profile.

1.21 Valley Gutters are not permitted.

2. Roadway Sections with Ditches:

2.1. Minimum grade on ditches - 0.10 percent

2.2 Ditch design to handle runoff as determined in Section III.C-10, "Drainage Design Requirements".

2.3 Side slopes of ditch not steeper than 3:1 for unimproved ditches. Steeper slopes may be allowed when existing right-of-way is limited or other construction features dictate the design.

2.4 Culverts shall be designed to carry ditch discharge, but not less than eighteen-inch (18") pipe and all driveways shall have culverts or bridges; no paved dips for driveways.

E. Inlets:

1. Type "BB" inlets or equal shall be used on all curb and gutter sections unless certain conditions exist which warrant the use of other standard inlets. See Section III.

2. Inlets at all low points on gutter gradient.

3. Inlets should be placed away from the major thoroughfare and on the side streets at street intersections.

4. Attempt to keep the proposed inlets away from the esplanade openings and out of major thoroughfare intersections. Also attempt to keep inlets out of future driveways.

5. Inlets shall be placed at the end of pavement in order to eliminate drainage from the pavement gutter into a ditch when the drainage is toward the end of the pavement or from the ditch to the pavement gutter.

6. When meeting a ditch, storm water must be received by use of an approved structure. See Section III.C-9.13.

F. Curbs, Sidewalks and Driveways

1. Curbs:

1.1 Standard curb height is six inches (6"), constructed in accordance with Galveston County Subdivision Standards.

1.2 Curbs are to be decreased from six inches (6") to zero inches (0") in ten feet (10') when approaching railroad tracks or existing roadway without curbs.

2. Sidewalks and Driveways

2.1 All sidewalks and driveways shall conform to handicap requirements of the state and with the ADA.

2.2 Sidewalk Construction in Esplanade: When concrete sidewalks are constructed in esplanades, they shall be six inches (6") thick.

G. Requirements for Intersections, Turnouts, Transitions and Thoroughfares

1. At a "T" intersection with a street that has not been improved to its ultimate width, concrete pavement should be stopped either at the right-of-way line or the end of the curb return, whichever would require less concrete removal at a future date.

2. When roadway turnouts are placed where an existing cross street intersects, the turnout should be sized to fit the ultimate pavement width and then transitioned to the existing roadway utilizing same materials as exist on the existing road/street. Length of transition shall conform to "Geometric Guidelines for Subdivision Streets, Harris County and City of Houston", and any subsequent revisions thereto.

3. When paving only one (1) roadway of a proposed two (2) roadway thoroughfare, all left turn lanes and esplanade crossovers in the one half (1/2) of the right-of-way where the roadway is being paved shall be paved to center line of the street right-of-way.

4. When meeting an existing concrete street at right angles, the existing street shall be saw cut in a V-shape extending from the curb returns to a point where the centerline of the proposed pavement intersects the quarter point of the existing street in order to create a crowned intersection. In the event that this construction causes excessively rough riding condition making adequate control of the vehicle difficult, a special design will be considered to eliminate this condition.

5. All traffic signs, striping, channelization devices, etc. must comply with the Manual on Uniform Traffic Control Devices.

H. Miscellaneous Paving Requirements

1. If driveways are to be constructed with the paving project, show locations on the drawings and post a center line for the driveway at the property line with elevation for each drive.

2. Private streets should be treated as if they were driveways, and the sidewalk area should be honored with no curb extending through this area.

3. Standard paving headers shall be placed at the end of all concrete slabs.

4. All concrete to be removed shall be removed either to an existing joint or a sawed joint.

5. A thirty (30) mph minimum sight distance shall be used on all crest vertical curves. Forty (40) mph minimum for major thoroughfares.

6. Standard City of Houston Type III barricades shall be placed at the end of all dead-end streets not terminating in a cul-de-sac and other locations where applicable.

7. Traffic Signs and Street Name Signs: Prior to final acceptance of the improvements, the owner of the development must furnish and install the traffic signs and street name signs for all intersections. The street name signs shall be standard City of Houston type. The traffic signs shall be the standard TxDOT type for small roadway signs.

8. Approval of all affected agencies must be obtained prior to approval of County Engineer.

9. A letter of agreement approving the construction plan crossing is required when paving is placed over a transmission pipeline.

10. Horizontal dowels are required when meeting concrete pavement that has no exposed steel.

    10.1 Dowels should be #6 bars, twenty four (24") long, twenty-four inches (18") center to center, embedded twelve inches (12") and epoxied.

    10.2 As an alternate to 10.1 above, saw cut and remove existing concrete to expose a minimum of twelve inches (12") of steel (longitudinal to the new construction) with an equivalent cross section area of steel equal to the proposed pavement steel.

11. Dead-end streets designed to be extended in the future shall have fifteen inches (15") of reinforcing steel exposed beyond the pavement, coated with asphalt and wrapped with burlap for future pavement tie. Maximum cul-de-sac length is 1000’ for single family, 800’ for all others.

12. Guidelines set forth in the Manual on Uniform Traffic Control Devices shall be strictly followed.

13. "Cold" joints are not allowed.

14. When any of the roads or streets of a subdivision or re-subdivision are constructed over, across or along any existing oil, gas, sulphur, chemical or other pipeline running through the subdivision or re-subdivision, such pipeline shall be lowered and cased in such a manner as to meet the minimum requirements of the pipeline company and Galveston County.

15. Road rights-of-way shall be staked with three fourths inch (3/4") iron rods at all P.C.'s, P.T.'s, block corners and dead end streets prior to acceptance of the improvements. Lot corners may be staked with minimum five eighths inch (5/8") iron rods (or other suitable metal pipes).

16. The following City of Houston, Department of Public Works and Engineering Standard Construction Details for Street Paving, dated September 1996 are adopted as part of these subdivision regulations: 02632-11, 02754-01,02754-02, 02763-01, 02763-02, 02775-01, 02775-02, 02902-01.

SECTION V

STRUCTURES

STRUCTURES

A. Bridges or other ditch type crossings may be required in order to maintain a smooth flow of vehicular traffic through any given area.

   In the event uncertainty exists concerning whether or not a bridge will be required, it is advisable to contact the County Engineer regarding same so that the issue can be resolved while the project is in the planning stage.

B. All bridges and box culverts to be designed to minimum H20 or HS-20 as applicable load design.

C. Bridge Widths:

   1. Where there are no curbs on approach pavement, the width of bridge face to face of curbs to be out to out distance of approach road pavement edges plus two feet (2') each side, plus walk or walks.

   2. Where curbs are on approach pavement, the width of bridge face to face of curbs to same as the distance between curb faces on the approach road.

   3. Individual one way traffic bridges on esplanade boulevards shall have one walk on the outside and two way traffic bridges shall have a walk on each side.

   4. Bridges of widths covered by condition (1) above are to have four feet (4') clear width sidewalks.

      Bridges of widths covered by condition (2) above are to have six feet (6') clear width sidewalks.

D. All bridges to be of reinforced concrete design unless specific application require other materials and then only at the approval of the County Engineer.

E. Bridge railings to be of galvanized or stainless steel on reinforced concrete parapet wall.

F. Galvanized Flex Beam Guard Rails shall be designed and constructed in accordance with the TxDOT Item for this item.

G. Design and construction shall be in conformance with TxDOT Item 420, "Concrete Structures".

H. Where culverts are used, the headwall shall be of sufficient height to allow construction of the guardrail and sidewalk at the elevation of the roadway.

SECTION VI

INSPECTION

INSPECTION

A. Developer or his/her engineer will notify the County Engineer's Office and the applicable Galveston County Drainage District by letter seven (7) days prior to when construction of improvements is to begin. Contractor shall provide a minimum of twenty-four (24) hours advance notice to County Engineer, of each day's construction. Failure to do so may result in rejection, by County, for acceptance and maintenance. Inspections shall be scheduled on normal County working days Monday through Friday.

   1. To insure conformance with the final subdivision plat and drawings as approved by the Commissioners' Court, a representative of the County Engineer will inspect the subdivision during construction and after construction is completed. The applicable Galveston County Drainage District may monitor construction related to their jurisdiction.

   2. The Inspectors, under the direct supervision of the applicable Galveston County Drainage District and the County Engineer will report their findings and note variations from the approved drawings. If the developer fails to correct these variations, the subdivision may not be accepted by the Commissioners' Court or the Drainage District.

B. Inspection costs will be paid by the Developer to the County before the subdivision plat is approved by the Commissioners' Court and recorded in the County Clerk's office. These costs will be determined on a case by case basis by the County.

SECTION VII

TESTING REQUIREMENTS

TESTING REQUIREMENTS

Note: A recognized laboratory, referenced throughout these specifications, means that the laboratory must be accredited by the American Association for Laboratory Accreditation (A2LA) in the field of construction materials testing. Testing costs will be paid by the developer to the county before the subdivision plat is approved by the Commissioners' Court and recorded in the County Clerk's office. These costs will be determined using the testing frequency specified here in by the County plus a 10% contingency.

A. General

1. Construction materials and operations shall be under controlled testing and inspection by a recognized laboratory in accordance with provisions set forth herein as well as all other applicable standards. All laboratory personnel shall be NICET approved and certified, Level II minimum for soils & ACI approved & certified for concrete.

2. Upon completion of the work and prior to acceptance of the work by Galveston County, the recognized laboratory shall submit, to the County Engineer, a written, certification sealed by a Professional Engineer registered in the state of Texas, that all construction materials and operations as specified above were under controlled testing and inspection by the laboratory and same complies with all specifications applicable to the project.

3. Testing of materials used for bedding and backfill of storm sewers as well as other utilities, when located underneath or within one (1) foot of subgrade shall be conducted to insure compliance with other provisions contained in Section III "Drainage Design Requirements" (General).

B. Testing Requirements for Flexible Base Pavement

Thickness of flexible base pavement shall conform to requirements given in Section IV-C.

1. Subgrade

1.1 Densities shall be made on each three hundred linear feet or less as conditions may require. 95% Modified Proctor density (ASTM 1557) shall be uniformly achieved.

1.2 In the event of rainwater standing on the subgrade after densities are made, or other conditions beyond contractors's control, additional densities

as specified above will be required prior to progressing with the work.

1.3 In no case shall there be less than three (3) density tests made for each day's activity and there shall be a minimum of three (3) density tests made for each street, unless approved otherwise by resident inspector.

1.4 The Contractor is required to have subgrade density test reports in his/her possession at the construction site at the time of placement of base material. Date of same shall be clearly marked.

2. Base Materials

Approved base material shall be spread and uniformly compacted to 95% Modified Proctor density (ASTM 1557) prior to commencing surfacing. Quantity of test(s) in accordance with above.

3. Surfacing

Surfacing shall be in accordance with Section IV "Paving Design Requirements".

4. Roadway section shall conform to provisions contained in Section IV "Paving Design Requirements".

5. All applicable portions of VII-B 1.2 and 3 contained in this section shall be strictly followed without exception.

C. Testing Requirements for Concrete Pavement

1. Subgrade

1.1 Densities shall be made on each three hundred (300) linear feet or less as conditions may require. Preparation of the subgrade shall be in accordance with applicable County and TxDOT specification item 260 or item 275. A minimum of 95% Modified Proctor density (ASTM 1557) shall be uniformly achieved. Gradation shall be 1¾"-100%, ¾"-85%, No.4-60%.

1.2 In the event of excessive rain water standing on the subgrade after densities are made and before

concrete is placed on the prepared subgrade, or other conditions beyond Contractor's control, additional densities as specified above will be required prior to placement of the concrete.

1.3 In no case shall there be less than three (3) density tests made for each day's activity and there shall be a minimum of three (3) density tests made for each street, unless otherwise approved by the resident inspector.

1.4 The Contractor is required to have density test reports in his/her possession at the construction site prior to placement of concrete. Date of same shall be clearly marked.

2. Concrete Test Requirements (General)

2.1 The testing laboratory shall review the mix design for each project utilizing criteria regarding cement content set forth in Section IV "Paving Design Requirements". Proportioning of concrete shall be in accordance with all applicable portions of the TxDOT Item "Concrete Pavement" Item 360.

2.2 Unless otherwise permitted, the concrete mix design shall be proportioned to provide a slump of4”±1”, when tested. A slump test will be made for each new concrete load or when consistency of the mix changes, at the point of discharge.

2.3 The laboratory shall inspect and confirm batch design proportions at the plant site each day prior to placement of that day's concrete.

2.4 Pavement mix designs shall meet compressive strength requirements of four thousand (4000) psi at twenty eight (28) days.

2.5 Traffic will not be allowed until 3500 psi is achieved.

3. Testing Requirements (Cylinders)

3.1 A minimum of four (4) cylinders shall be made for each seven hundred fifty (750) square yards, or less, of pavement placed each day. Samples to be taken in accordance with TxDOT STDS and molded and cured in accordance with TxDOT STDS. Any deviations from these requirements shall be recorded on the test report.

3.2 Test specimens in accordance with TxDOT STDS. One specimen shall be tested at 7 days and two shall be tested at 28 days. The acceptance testresults shall be the average of the strengths of the two specimens tested at 28 days. If one specimen in a test manifests evidence of improper sampling, handling, molding or testing, it shall be discarded and the strength of the remaining specimens shall be considered the test result. Should both specimens in a test show any of the above defects, the entire test shall be discarded and cores from the area in question may be required by Galveston County in accordance with "Method of Obtaining and Testing Drilled Cores and Sawed Beams of Concrete" (ASTM C42). These cores & tests will be at no expense to Galveston County. If the average seven day break and the twenty eight (28) day breaks do not meet minimum requirement, even though evidence of improper procedures as outlined above are not apparent, the County Engineer may, again, require cores from area in question in accordance with ASTM C42.

3.3 In the event low strength concrete is confirmed, pavement in the area in question will not be accepted.

3.4 Additional cylinders may be required due to concrete placing conditions, or for adequately determining the strength of concrete when the early opening of the pavement to traffic is necessary and/or desirable. See TxDOT specification item 360, "Concrete Pavement".

4. Concrete Test Requirements (Cores)

4.1 After the pavement has been in place for a minimum of fourteen days, one (1) core shall be taken for each 1000 square yards of pavement, or portions thereof, except that not less than one (1) core shall be taken on each street. Cores shall be taken alternately in each one-half section of the pavement in order to obtain a representative sample for thickness. Location of cores shall be selected by the Resident Inspector.

Paving Thickness: Pavement thicknesses contained herein and in the Pavement Design Section (Section IV-B, 1, 2, 3 and 5) are <u>minimums</u>. Therefore, there should not be a need for any tolerance for pavement that is too thin, or less than plan requirements. However, in the event pavement the

thickness of which is less than plan requirements is determined, the following shall apply:

The thickness of individual cores shall be determined in accordance with ASTM C174 by averaging no less than three (3) such measurements. Any core, the thickness of which is equal to or greater than one-quarter-inch (1/4") less than the thickness shown on the approved drawings shall be considered one of deficient thickness. Cores drilled for thickness measurements shall be a minimum of four inches (4") in diameter.

If a core is determined to be deficient in thickness, additional cores shall be taken at ten-foot (10') intervals on either side of the deficient core to establish the length of the deficient section. The length of the deficient section shall be the distance between the nearest cores of satisfactory thickness, and the width shall be the entire width of the pavement. That pavement shall be removed and replaced with concrete that meets or exceeds requirements. This shall be done at no cost to Galveston County.

Other testing requirements and procedures will be given under the Section titled "Testing Requirements".

Defective Concrete. Any defective concrete discovered, after the forms have been removed, shall be removed immediately and replaced. If the surface of the concrete is bulged, uneven or shows excessive honeycombing or form marks, which in the opinion of the Engineer and the County Engineer cannot be repaired satisfactorily, the entire section shall be removed or renewed in a manner which is satisfactory to Galveston County.

4.2 Cores shall be broken at minimum 28 days in accordance with ASTM C42. A minimum compressive strength of 4000 psi is required.

Thickness shall conform to minimum requirements contained in Section IV-B, subsection 1, 2, 3 and 5.

4.3 If a core fails to meet minimum strength requirements, additional cores may be required by the County Engineer and tested in accordance with procedures outlined above (ASTM C42).

In the event low strength concrete is confirmed, pavement in the area in question will not be accepted.

In the event minimum thickness is not attained, pavement will not be accepted.

D. Testing Requirements (Structures)

1. Bridges and box culvert testing shall be in accordance with TxDOT Specification Item 421 "Portland Cement Concrete", and others as they apply.

E. Copies of all test reports to be submitted to the County Engineer in an expeditious manner

SECTION VIII

ACCEPTANCE OF IMPROVEMENTS WITHIN SUBDIVISIONS

ACCEPTANCE OF IMPROVEMENTS WITHIN SUBDIVISIONS

A. At the time pavement and drainage facilities have been completed, the following documents shall be submitted to the County Engineer on behalf of the owner/developer by the Professional Engineer who received County Engineer approval of drawings for construction of the improvements.

1. A letter from the Professional Engineer requesting acceptance of the improvements.

2. One reproducible mylar set and 3 prints of complete "record" construction drawings shall be provided and shall become a part of the permanent file to be maintained by the County Engineer and the applicable Drainage District. The following information shall be added to the original drawings approved by the County Engineer.

2.1 Crown and gutter line elevations of the roadway, flow line elevations and grade of all inlets and storm sewers shall be shown. Each drawing shall be stamped as a "Record Drawing".

EXAMPLE

Drawings, as approved prior to construction	Record drawings, subsequent to construction
T.C. = 101.50	T.C. = 101.50
	101.49
	G 100.89
flowline = 94.50	flowline = 94.50
	94.52

2.2 Top elevations of storm sewer manholes as well as all crude oil, gas and product pipelines shall be shown. Technique shall be similar to that prescribed above.

3. A letter signed and sealed by the Professional Engineer certifying that the elevations and grades were taken by an on-site survey on a certain date and that all pavement, inlets, manholes and appurtenances are constructed to grade as shown on the record drawings and in compliance with the approved plans & specifications. The letter shall also certify that all trunk storm sewers, and leads are of the proper size and that all improvements are capable of performance as

designed and approved. Any deviations from the approved construction drawings to actual construction shall be noted for evaluation by the County Engineer.

4. A letter from the applicable Galveston County Drainage District stating that the drainage facilities are constructed in accordance with the approved plans and specifications and are acceptable to them.

5. Certification letter from the recognized laboratory as described in Section VII-A, 2, "Testing Requirements", Sub-Section B, as well as copies of testing results as specified in Section VII-A, 2.

6. Construction costs for the pavement and drainage improvements.

B. Upon receipt of the above listed documentation, the County Engineer or designated representative(s) shall complete review of the material and an on-site inspection shall be scheduled.

1. At the time of inspection, should any deficiencies be found, the County Engineer shall notify the applicant, in writing, of the deficiencies requiring correction. Re-inspection by the County Engineer will be made following receipt of a letter from the Professional Engineer stating that all noted deficiencies have been corrected. If more than three months have passed since the date of the first deficiency report released by the County Engineer, the project is subject to a complete re-inspection and all noted deficiencies found at that time shall be identified and reported to the Professional Engineer for correction.

2. At the time all corrective work is completed and the County Engineer has found the streets and drainage improvements have been constructed in accordance with the approved plans and specifications, the County Engineer shall certify to such.

C. Bond

1. At the request of the developer's engineer the County Engineer or designated representative(s) shall re-inspect these road, street and drainage improvements on or after one (1) year after the date of certification stated in B.2 above.

2. At the time of re-inspection, should any deficiencies be found, the County Engineer shall notify the owner/developer as principal on the bond, in writing, of the deficiencies requiring correction. Re-inspection by the County Engineer will be made following receipt of a letter from the Professional Engineer stating that all noted deficiencies have been corrected. If more than three months have passed since the date of the first deficiency report released by the County Engineer, the project is subject to a complete re-inspection and all noted deficiencies found at that time shall be identified and reported to the Professional Engineer for correction.

3. At the time all corrective work is completed and the County Engineer has found the streets and drainage improvements are in compliance with the approved plans and specifications, the County Engineer shall recommend to Commissioners' Court that the bond be terminated. Upon action by Commissioners' Court, the County Engineer, by letter, will transmit a copy of the Court Order terminating the bond to all concerned parties.

4. The County Road Administrator shall place the roads and drainage on the road maintenance system.

SECTION IX

PAVING & DRAINAGE
STANDARD DRAWINGS

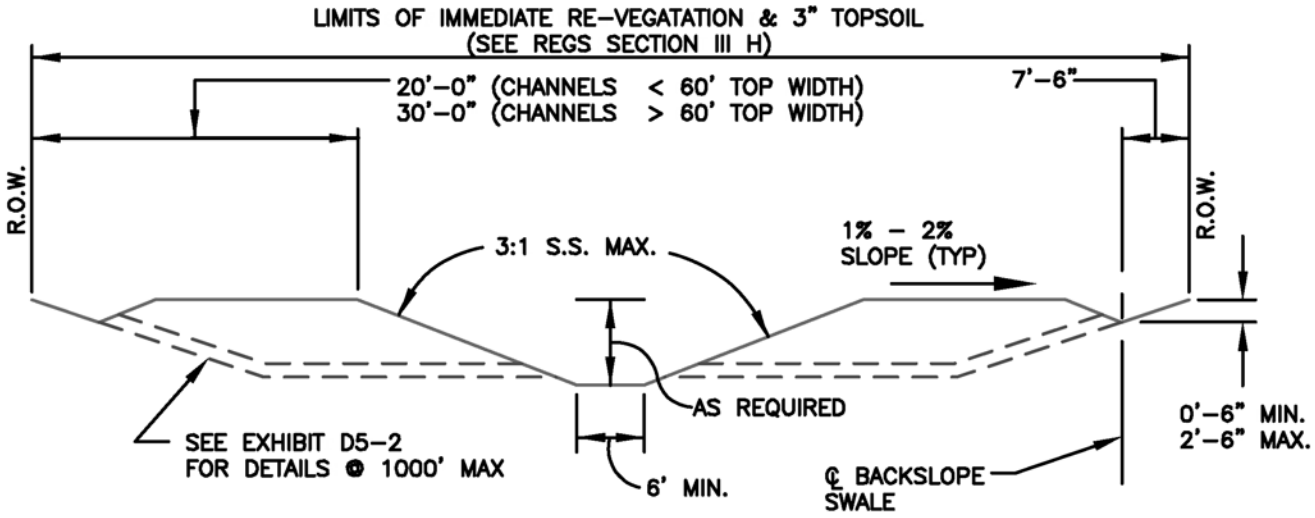

* NO FENCES, TREES, STRUCTURES, BUILDINGS, UTILITIES OR ANY OTHER OBSTRUCTIONS OR ANY OTHER ITEMS ARE ALLOWED WITHIN THE R.O.W. OR EASEMENT.

SUBDIVISION STANDARDS FOR DRAINAGE

TYPICAL SECTION
GRASS-LINED TRAPEZOIDAL

N.T.S.

DATE: SEPTEMBER 1996 PREPARED BY GALVESTON COUNTY ENGINEERING DEPARTMENT DRAWNING D5-1

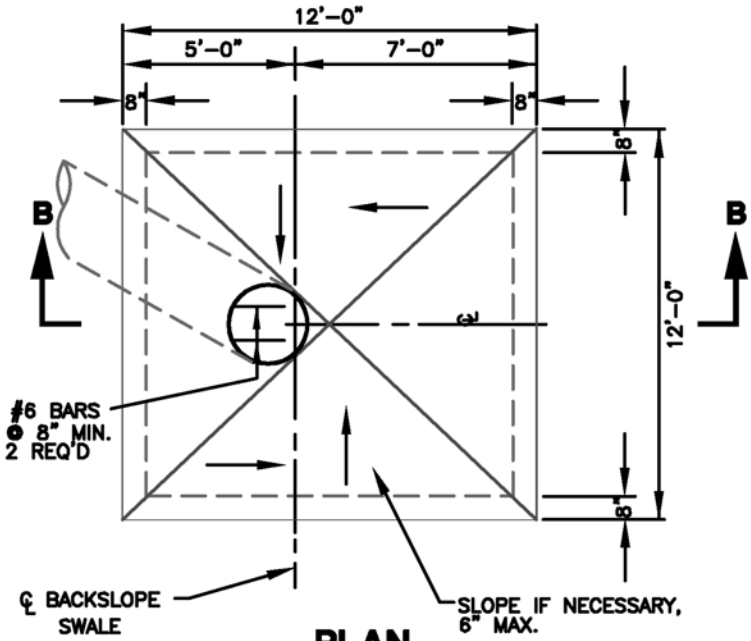

PLAN

PIPE DIA.	SLOPE
18 IN.	0.6%
MAX. 24-30 IN.	0.3%

* IN COASTAL OR CORROSIVE LOCATIONS CORRUGATED PLASTIC PIPE IS REQUIRED. SUBMIT SPECIFICATIONS & PIPE DATA FOR PRE-APPROVAL.

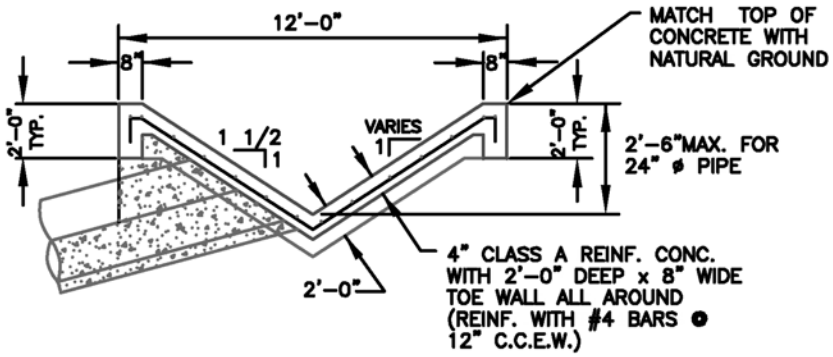

BACKSLOPE DRAIN SECTION B - B

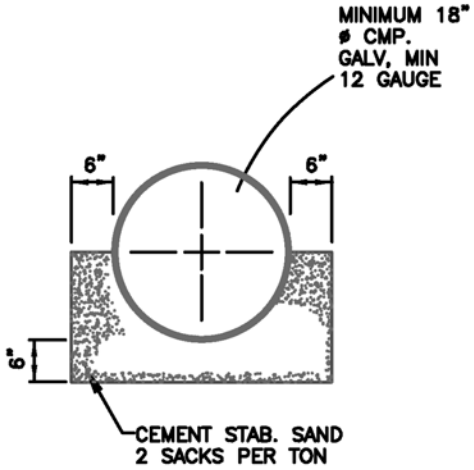

SECTION A - A

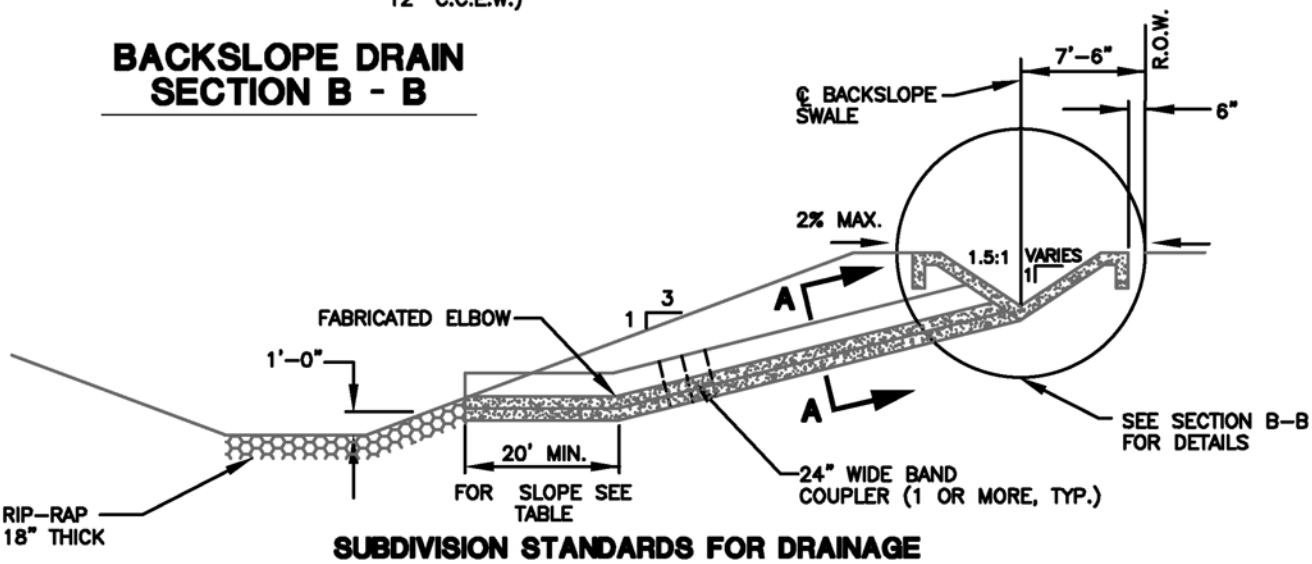

SUBDIVISION STANDARDS FOR DRAINAGE

TYPICAL BACKSLOPE SWALE INTERCEPTOR STRUCTURE

N.T.S.

DATE: SEPTEMBER 1996 PREPARED BY GALVESTON COUNTY ENGINEERING DEPARTMENT DRAWNING D5-2

PIPE DIA.	SLOPE
18 IN.	0.6%
36 IN.	0.3%
MAX. 42 IN.	0.2%

OUTFALLS LARGER THAN 42" WILL REQUIRE AN INDIVIDUALLY DESIGNED STRUCTURE.

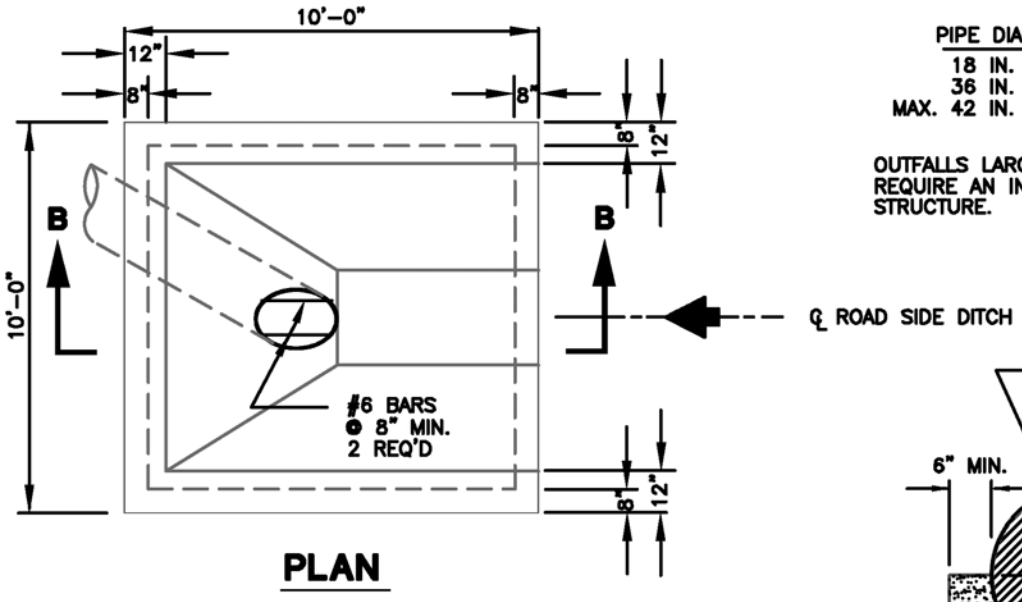

PLAN

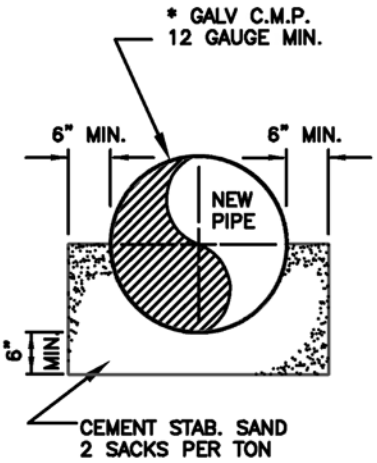

SECTION A - A

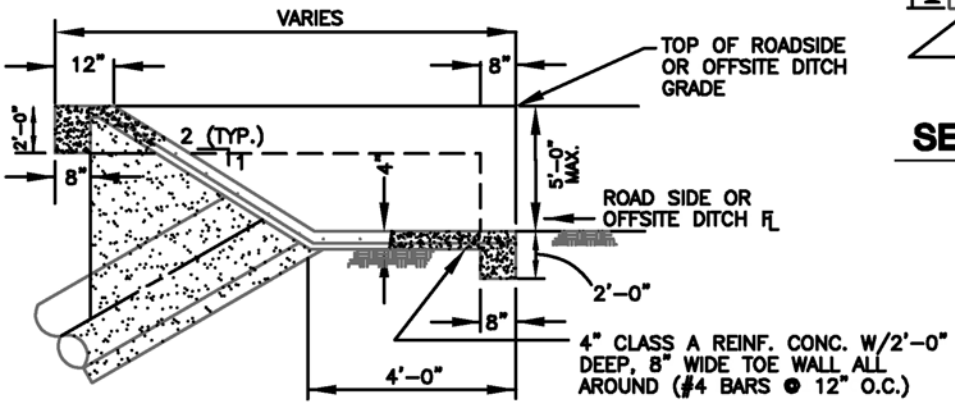

SECTION B - B

* IN COASTAL OR CORROSIVE LOCATIONS CORRUGATED PLASTIC PIPE IS REQUIRED. SUBMIT SPECIFICATIONS & PIPE DATA FOR PRE-APPROVAL.

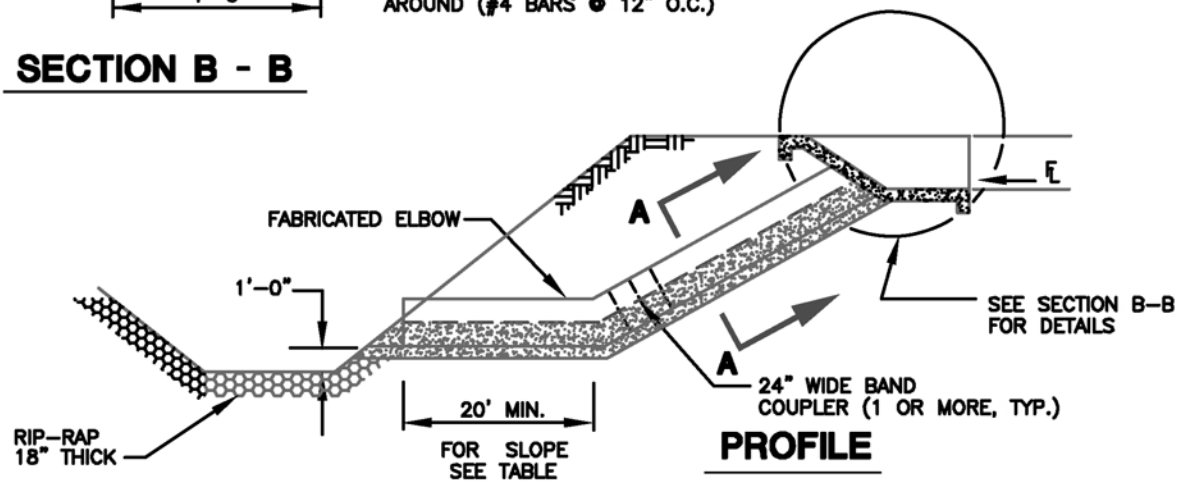

PROFILE

SUBDIVISION STANDARDS FOR DRAINAGE

TYPICAL ROADSIDE OR OFFSITE DITCH INTERCEPTOR STRUCTURE

N.T.S.

DATE: SEPTEMBER 1996 PREPARED BY GALVESTON COUNTY ENGINEERING DEPARTMENT DRAWNING D5-3

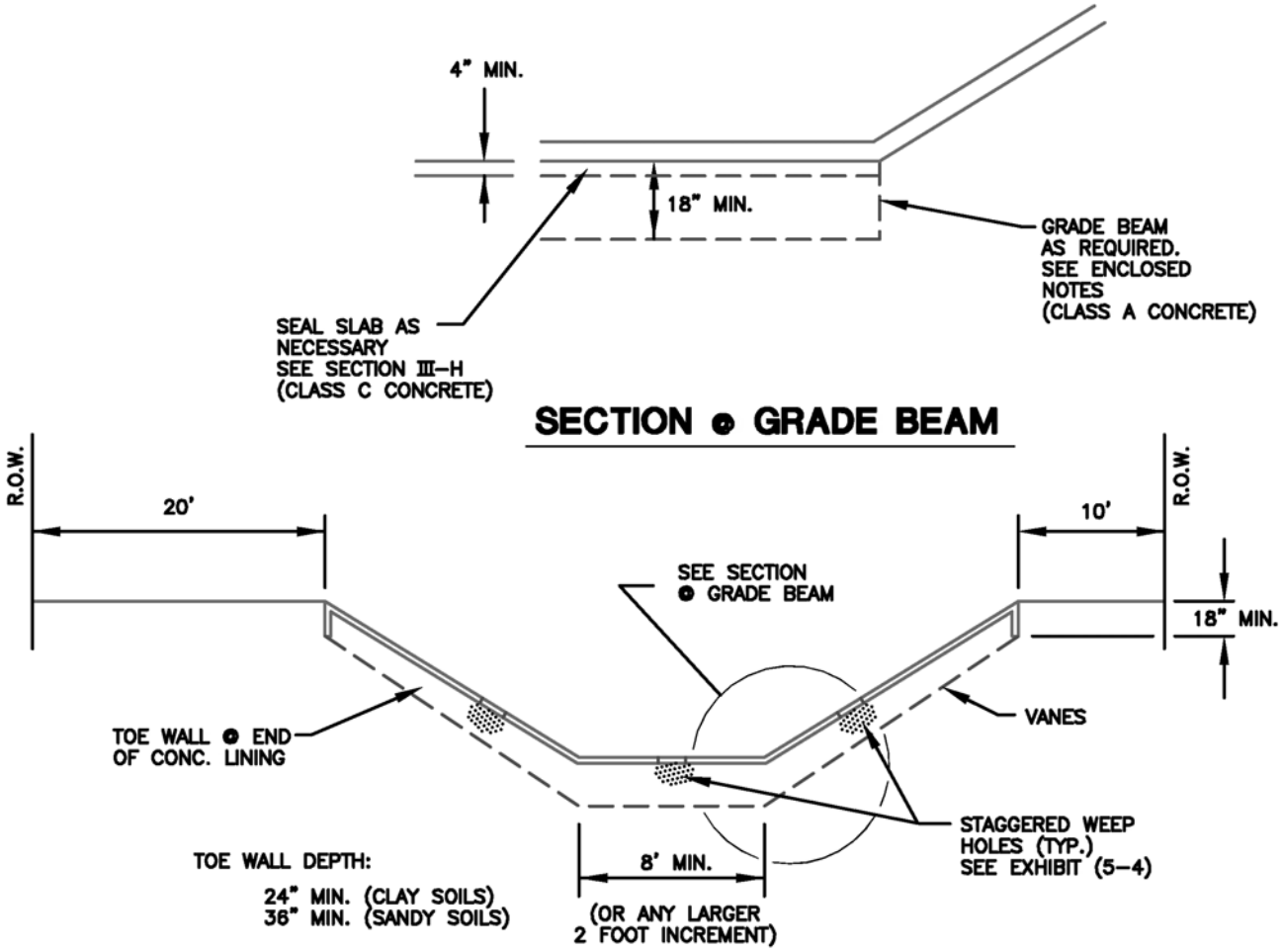

A) MAX. SIDE SLOPE 1-1/2:1 (SEE SECTION III-H)
B) NARROW MAINTENANCE BERM-ONE SIDE ONLY
C) NO BACKSLOPE DRAINS REQUIRED
D) SLOPE PAVING THICKNESS MIN. 4"
E) CONCRETE, CLASS A, EXCEPT AS NOTED

* NO FENCES, TREES, STRUCTURES, BUILDINGS, OR ANY OTHER OBSTRUCTIONS OR ANY OTHER ITEMS ARE ALLOWED WITHIN THE R.O.W. OR EASEMENT.

SUBDIVISION STANDARDS FOR DRAINAGE

TYPICAL SECTION
CONCRETE TRAPEZOIDAL

N.T.S.

DATE: SEPTEMBER 1996 PREPARED BY GALVESTON COUNTY ENGINEERING DEPARTMENT DRAWNING D5 – 4

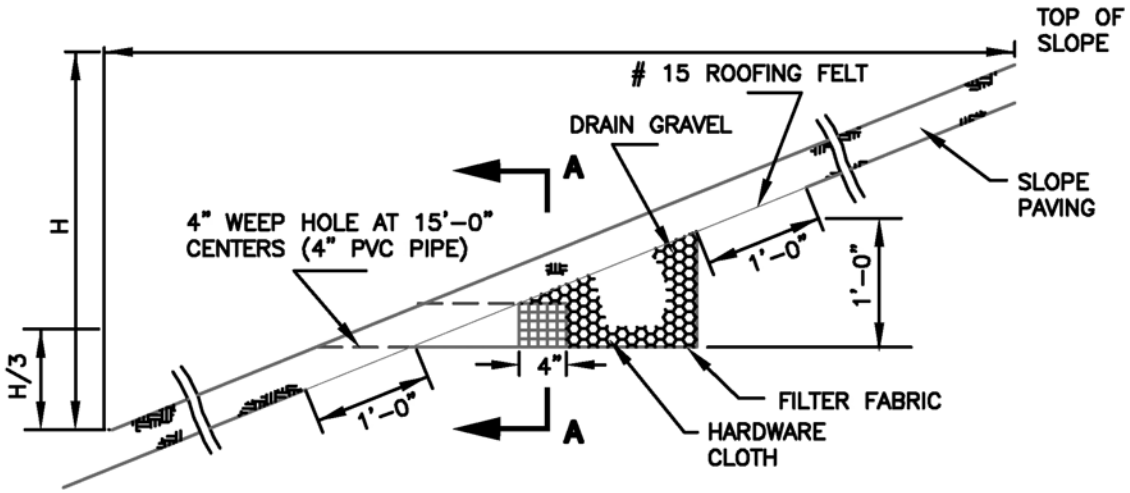

SLOPE DETAIL

DRAIN GRAVEL	
SIEVE SIZE	% FINER
3/4"	100
3/8"	55 – 100
NO. 4	15 – 100
NO. 8	0 – 50
NO. 16	0 – 15
NO. 20	0 – 5
NO. 200	0 – 5

HARDWARE CLOTH	
MAX. WIDTH OF MESH OPENING	1/4"
MIN. WIDTH OF MESH OPENING	1/16"

FILTER FABRIC	
MAX. EQUIVALENT OPENING SIEVE	NO. 70 SIEVE
MIN. EQUIVALENT OPENING SIEVE	NO. 100 SIEVE

* P.C.V. PIPE SHALL BE SCHEDULE 40.

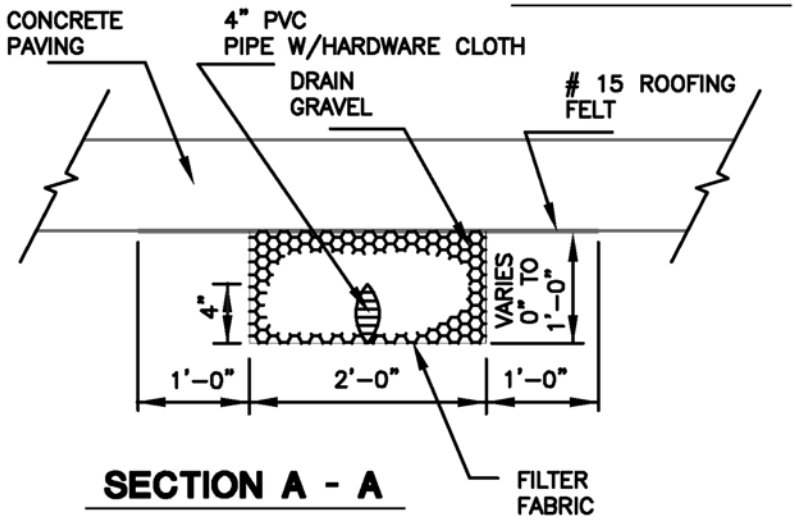

SECTION A - A

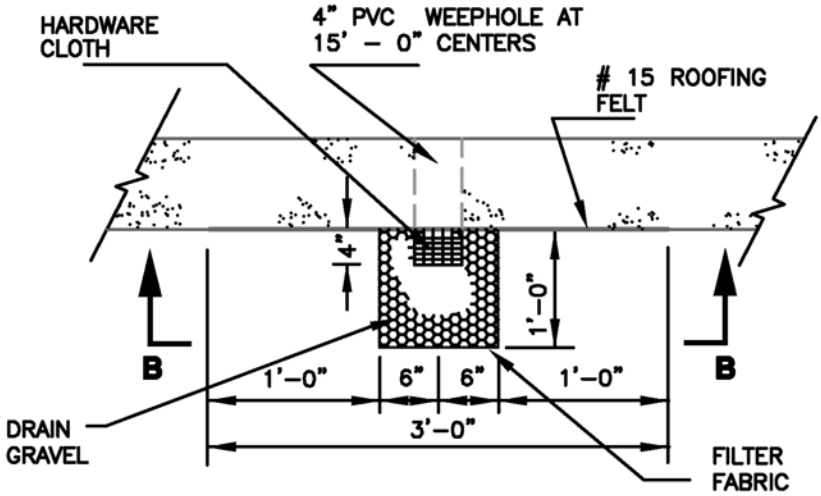

BOTTOM SLAB DETAIL

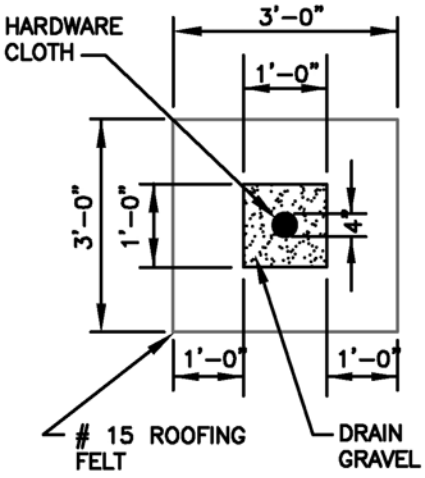

SECTION B - B

SUBDIVISION STANDARDS FOR DRAINAGE

TYPICAL WEEP HOLE DETAIL

N.T.S.

DATE: SEPTEMBER 1996 PREPARED BY GALVESTON COUNTY ENGINEERING DEPARTMENT DRAWNING D5–5

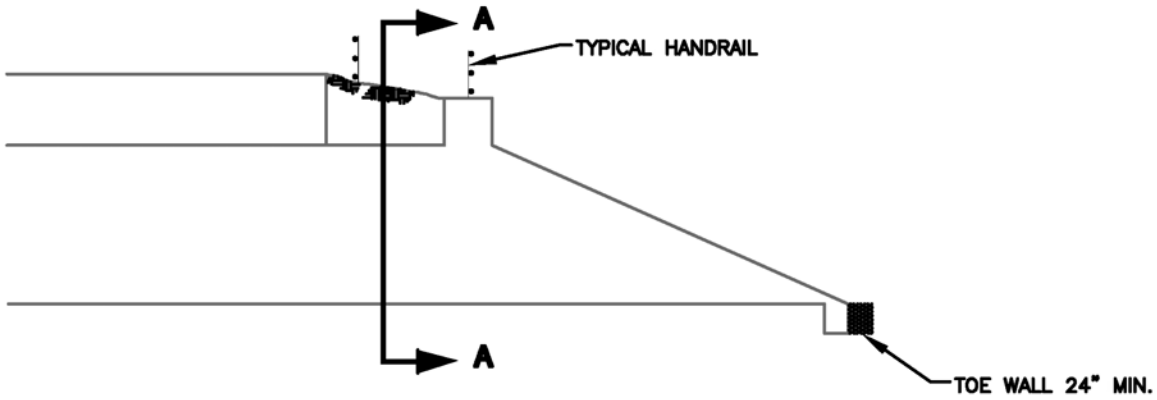

PROFILE

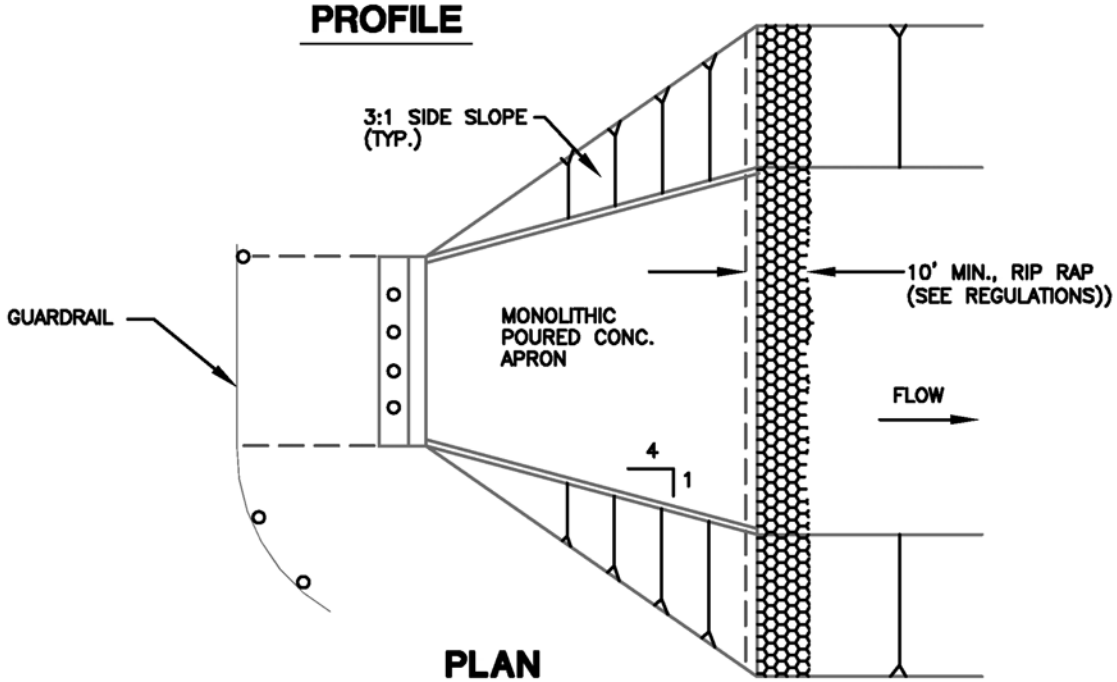

PLAN

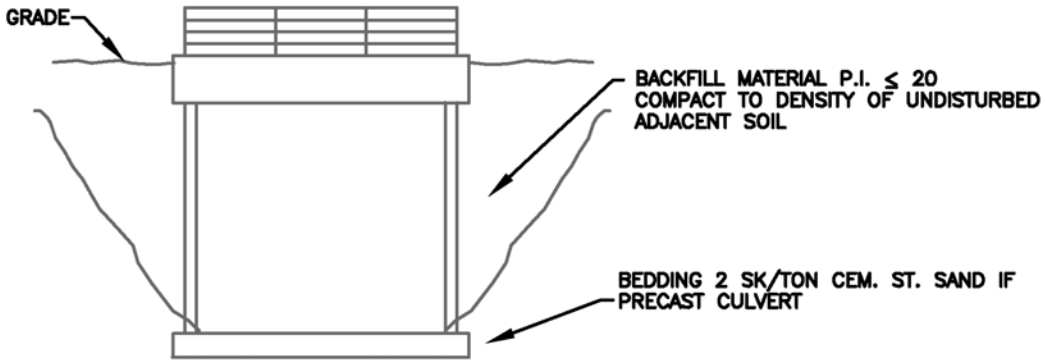

SECTION A - A

SUBDIVISION STANDARDS FOR DRAINAGE

TYPICAL BOX CULVERT SCHEMATIC

N.T.S.

DATE: SEPTEMBER 1996 PREPARED BY GALVESTON COUNTY ENGINEERING DEPARTMENT DRAWNING D5 – 6

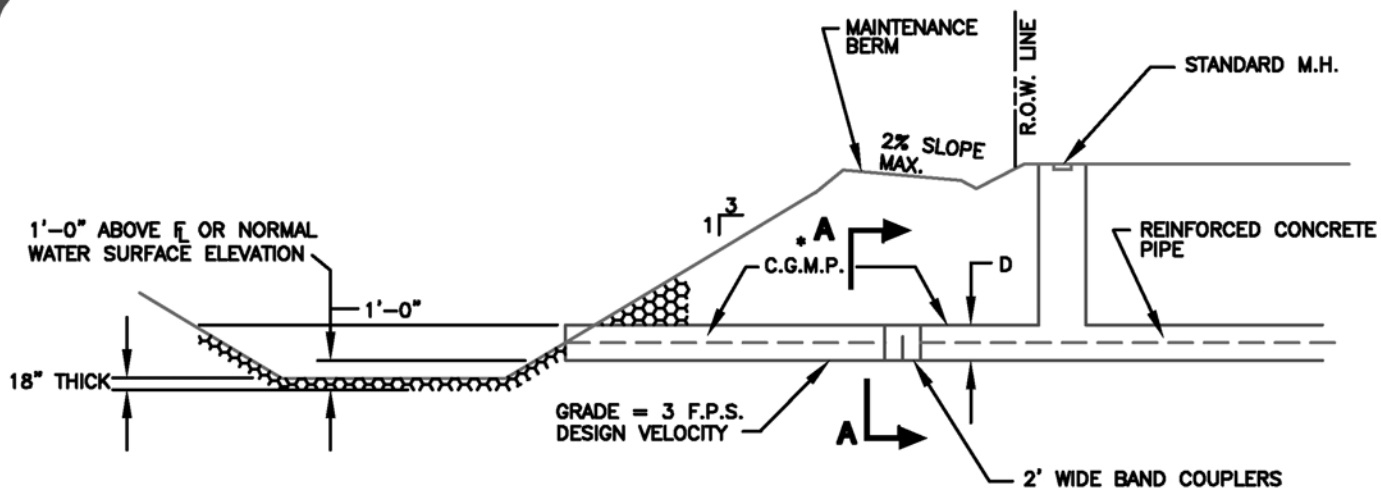

ELEVATION

* IN COASTAL OR CORROSIVE LOCATIONS CORRUGATED PLASTIC PIPE IS REQUIRED. SUBMIT SPECIFICATIONS & PIPE DATA FOR PRE-APPROVAL

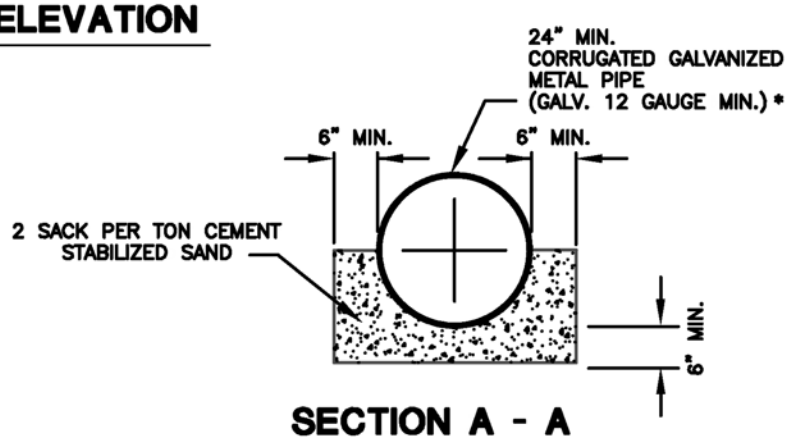

SECTION A - A

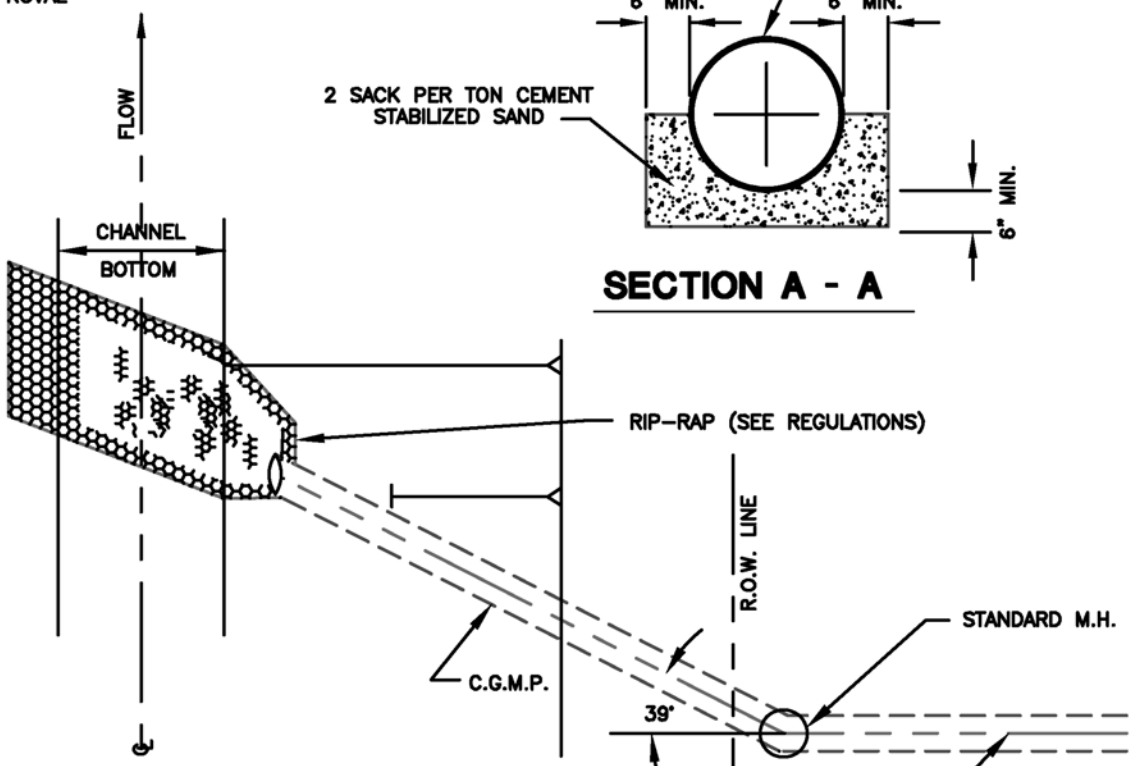

PLAN

SUBDIVISION STANDARDS FOR DRAINAGE

TYPICAL STORM SEWER OUTFALL STRUCTURE-

24-INCH TO 42-INCH DIAMETER

N.T.S.

DATE: SEPTEMBER 1996 PREPARED BY GALVESTON COUNTY ENGINEERING DEPARTMENT DRAWNING D5 – 7

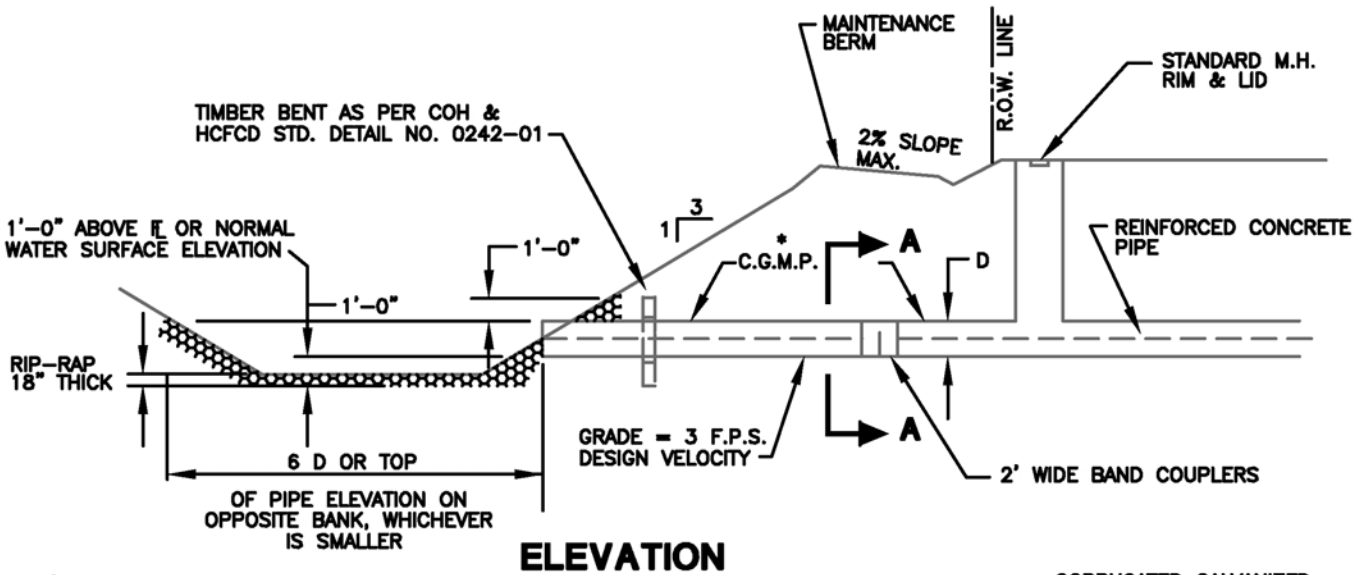

ELEVATION

* IN COASTAL OR CORROSIVE AREAS LOCATIONS CORRUGATED PLASTIC PIPE IS REQUIRED.

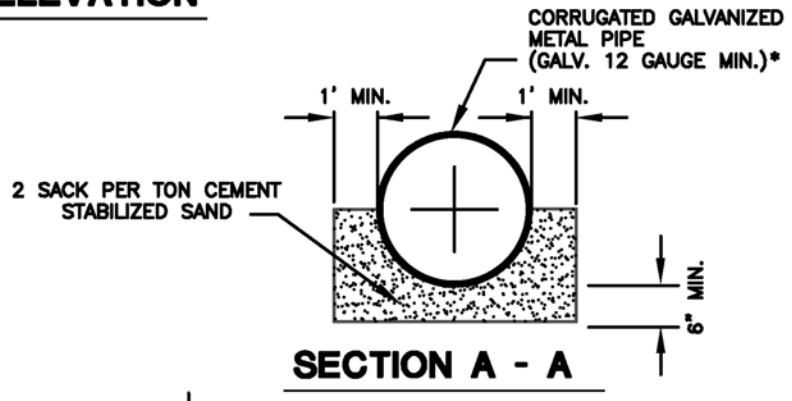

SECTION A - A

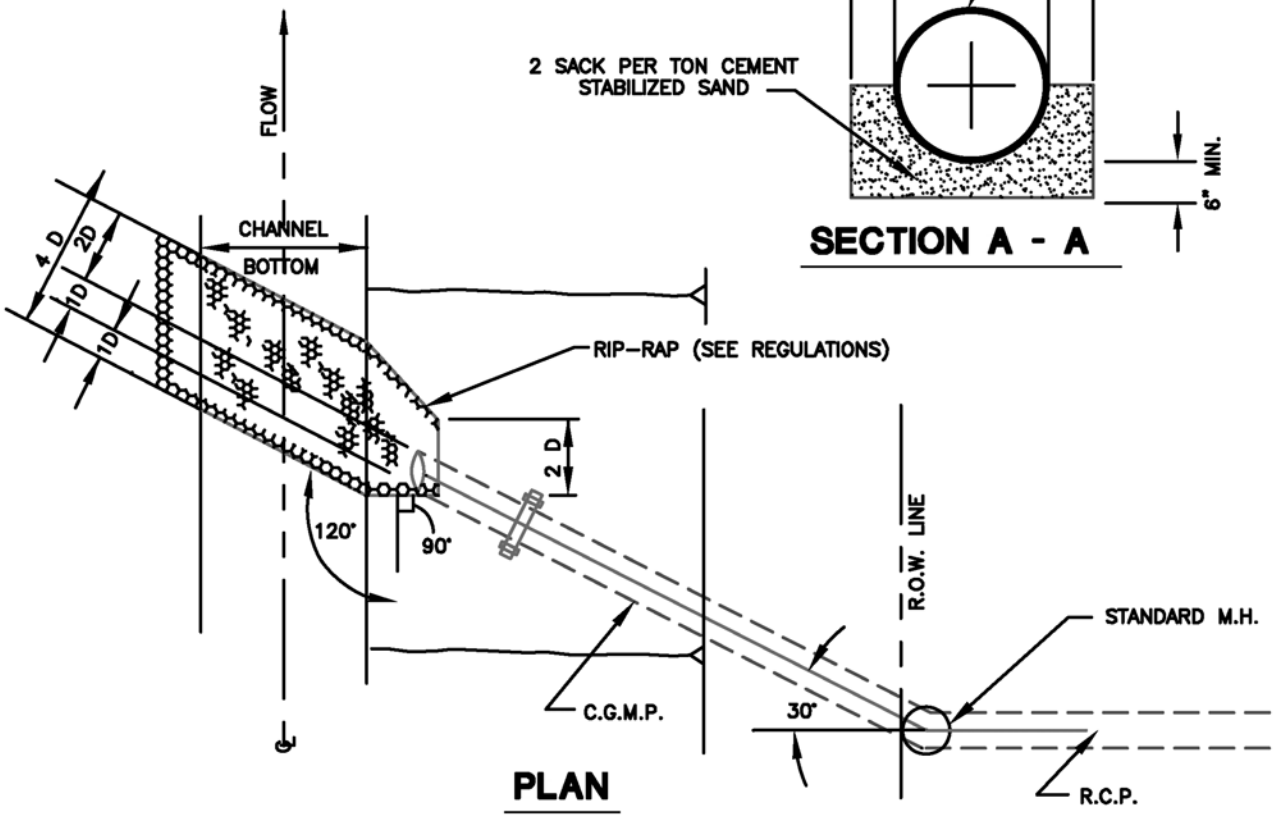

PLAN

SUBDIVISION STANDARDS FOR DRAINAGE

TYPICAL STORM SEWER OUTFALL STRUCTURE

48-INCH AND LARGER DIAMETER

N.T.S.

DATE: SEPTEMBER 1996 PREPARED BY GALVESTON COUNTY ENGINEERING DEPARTMENT DRAWNING D5-8

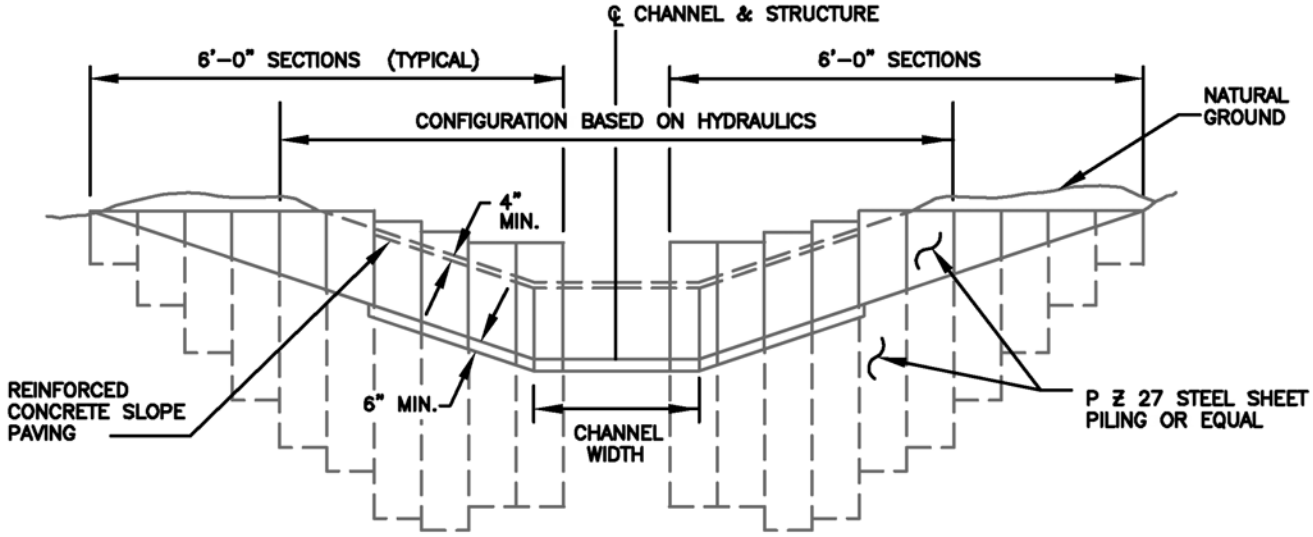

SECTION

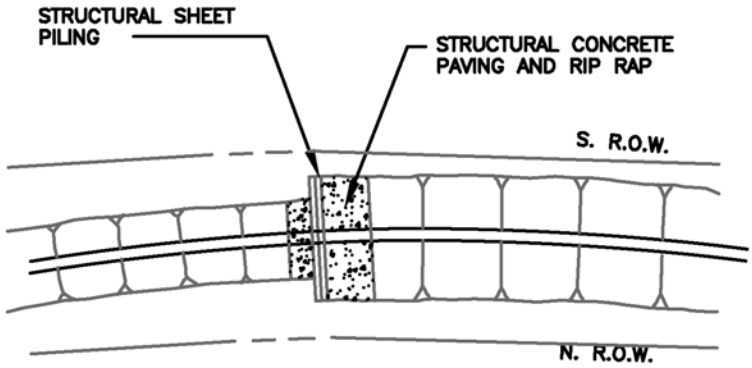

PLAN

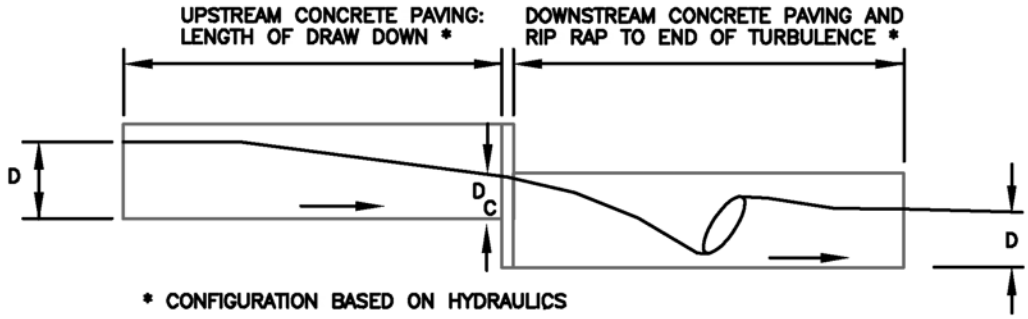

PROFILE

SUBDIVISION STANDARDS FOR DRAINAGE

STEEL SHEET PILING DROP STRUCTURE

N.T.S.

DATE: SEPTEMBER 1996 PREPARED BY GALVESTON COUNTY ENGINEERING DEPARTMENT DRAWNING D5 – 9

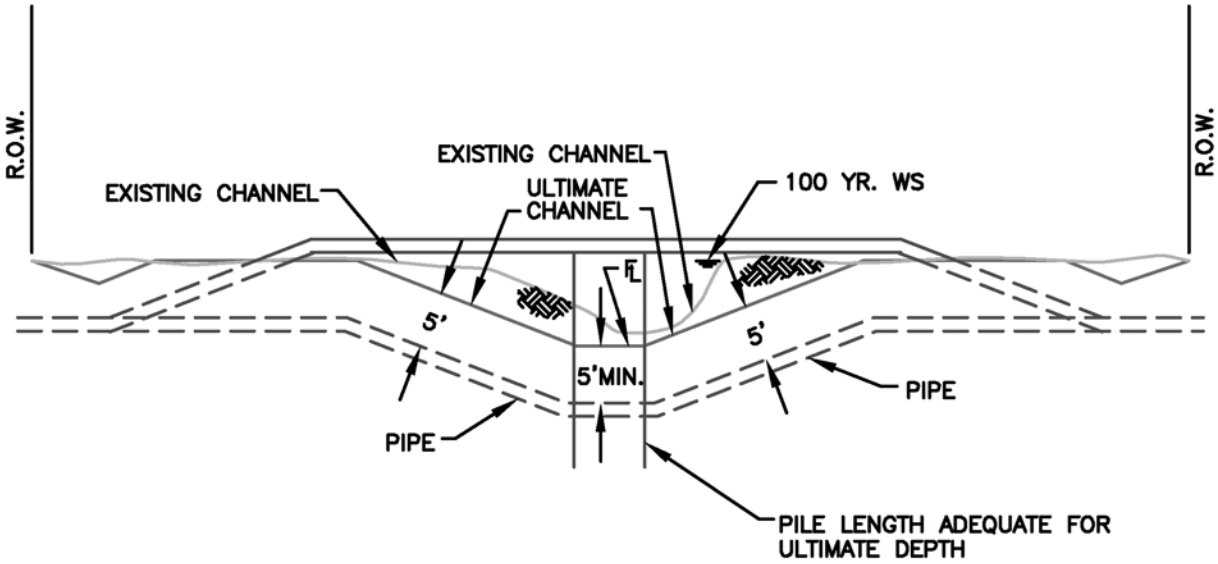

SUBDIVISION STANDARDS FOR DRAINAGE

TYPICAL SECTION UTILITY CROSSING

N.T.S.

DATE: SEPTEMBER 1996 PREPARED BY GALVESTON COUNTY ENGINEERING DEPARTMENT DRAWNING D5–10

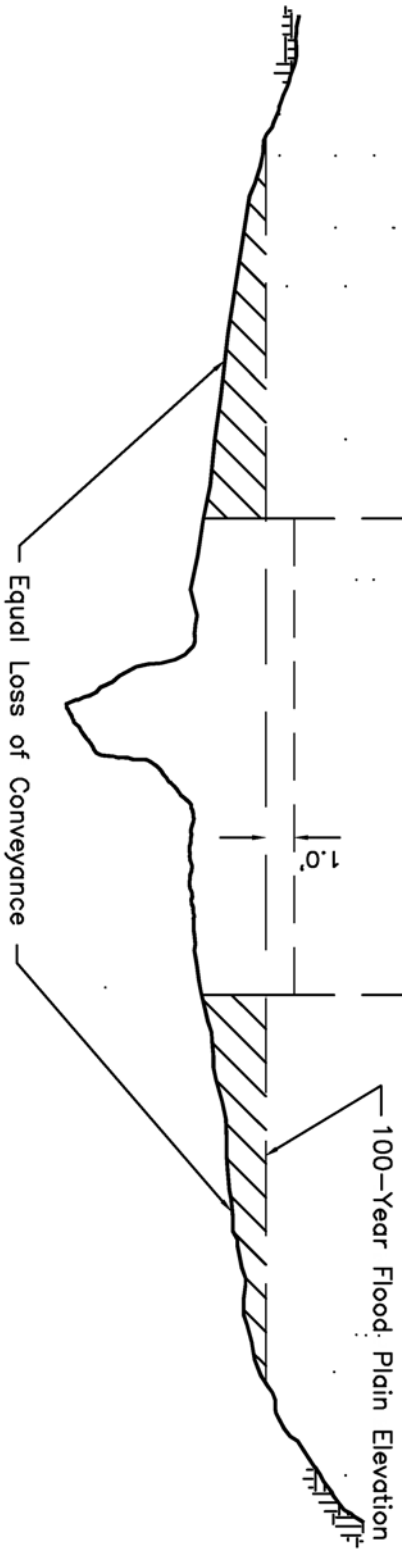

PREPARED BY GALVESTON COUNTY ENGINEERING DEPARTMENT

GALV. CO.
FLOOD PLAIN
ADMINISTRATOR

N.T.S.
1996

DEFINITION OF 100-YEAR FLOOD PLAIN AND FLOODWAY

t = THICKNESS OF CONCRETE PAVEMENT
REFER TO SUBDIVISION RULES AND
REGULATIONS

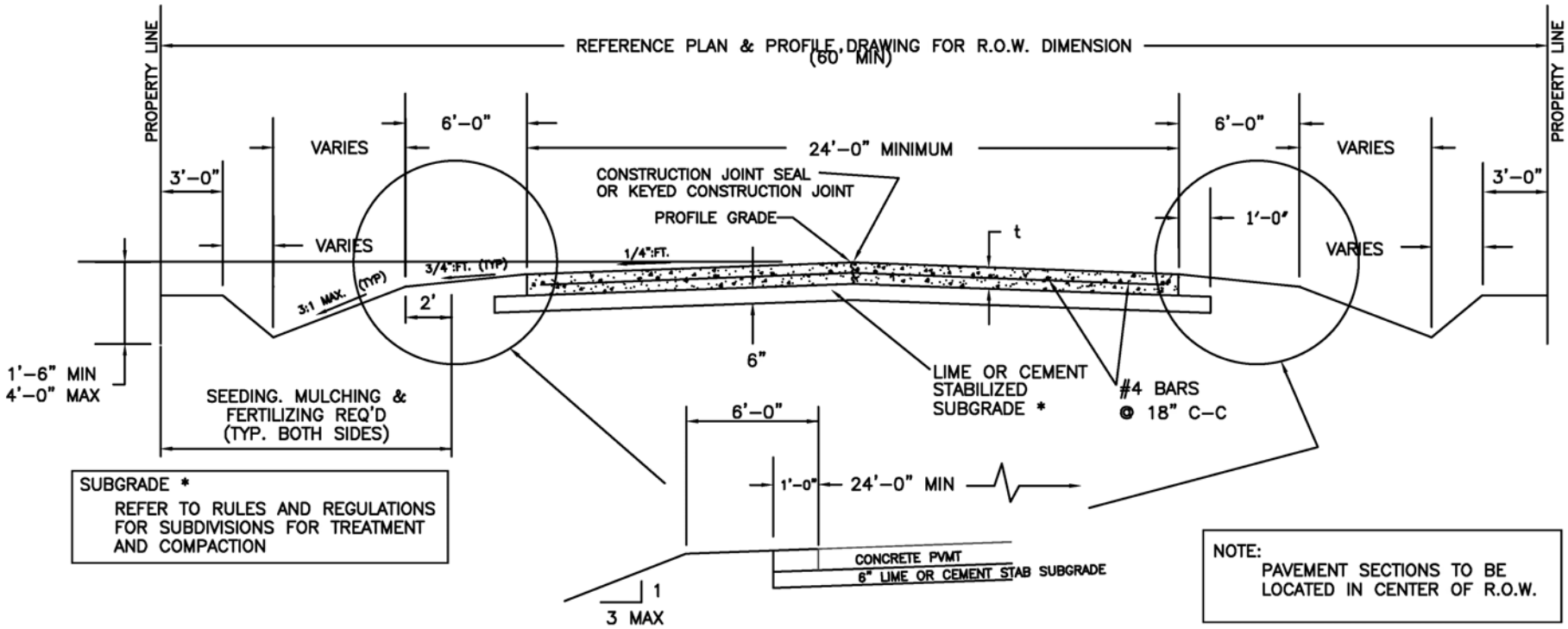

SUBGRADE *
REFER TO RULES AND REGULATIONS
FOR SUBDIVISIONS FOR TREATMENT
AND COMPACTION

NOTE:
PAVEMENT SECTIONS TO BE
LOCATED IN CENTER OF R.O.W.

SUBDIVISION STANDARDS FOR

CONCRETE PAVEMENT

DITCH SECTION

N.T.S.

DATE: 7-10-96 PREPARED BY GALVESTON COUNTY ENGINEERING DEPARTMENT DRAWNING P - 2

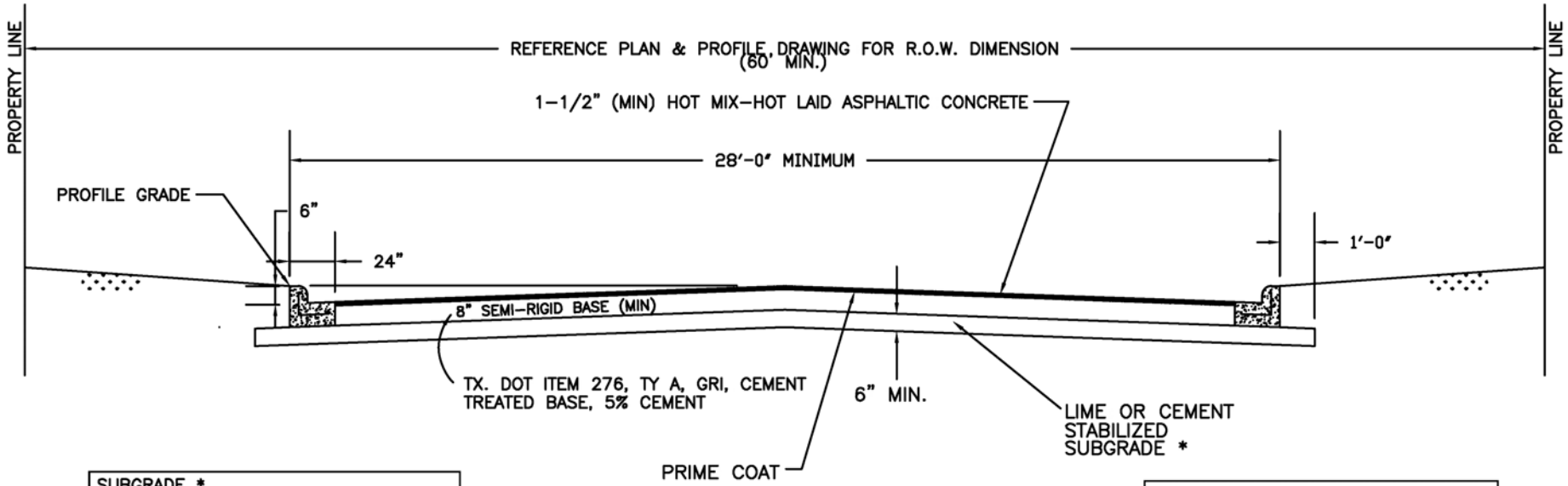

SUBGRADE *
REFER TO RULES AND REGULATIONS FOR SUBDIVISIONS FOR TREATMENT AND COMPACTION

NOTE:
PAVEMENT SECTIONS TO BE LOCATED IN CENTER OF R.O.W.

SUBDIVISION STANDARDS FOR

SEMI-RIGID BASE PAVEMENT

CURB & GUTTER SECTION

N.T.S.

DATE: 7-10-96 PREPARED BY GALVESTON COUNTY ENGINEERING DEPARTMENT DRAWNING P - 3

t = THICKNESS OF CONCRETE PAVEMENT
REFER TO SUBDIVISION RULES AND
REGULATIONS

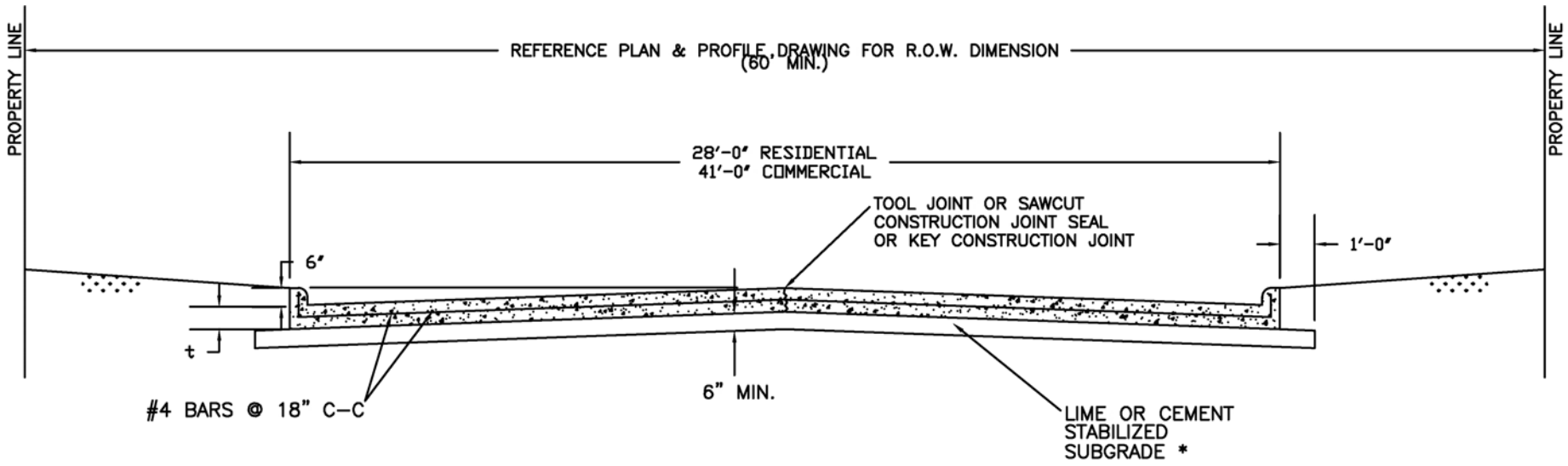

SUBGRADE *
REFER TO RULES AND REGULATIONS
FOR SUBDIVISIONS FOR TREATMENT
AND COMPACTION

NOTE:
PAVEMENT SECTIONS TO BE
LOCATED IN CENTER OF R.O.W.

SUBDIVISION STANDARDS FOR

CONCRETE PAVEMENT

CURB & GUTTER SECTION

PARBOLIC CROWN IS AN ACCEEPTABLE OPTION

N.T.S.

DATE: 7-10-96 PREPARED BY GALVESTON COUNTY ENGINEERING DEPARTMENT DRAWNING P - 4

4" X 12" MONOLITHIC AND TRANSITION CURB NOTES:

1. 6– INCH CONCRETE CURB TO BE CONSTRUCTED ON ALL ESPLANADES, ISLANDS AND NON–RESIDENTIAL STREETS. RESIDENTIAL STREETS MAY BE CONSTRUCTED WITH EITHER 6–INCH CONCRETE CURB OR 4– INCH X 12–INCH CONCRETE CURB AS NOTED ON PLANS.
2. ALL 4–INCH X 12–INCH CONCRETE CURBS TO BE POURED MONOLITHICLY WITH PROPOSED CONCRETE PAVEMENT.
3. TRANSITIONS FROM 6–INCH CONCRETE CURB TO 4–INCH CONCRETE CURB TO BE ACCOMPLISHED WITHIN 10 FEET, UNLESS OTHERWISE SHOWN. IF THIS 10–FOOT TRANSITION CURB IS NOT POURED MONOLITHICLY WITH THE PAVEMENT THEN REINFORCING STEEL AS SHOWN IN TYPICAL DETAIL 4–INCH X 12–INCH TRANSITION CURB IS TO BE INSTALLED.

t = THICKNESS OF CONCRETE PAVEMENT REFER TO SUBDIVISION RULES AND REGULATIONS

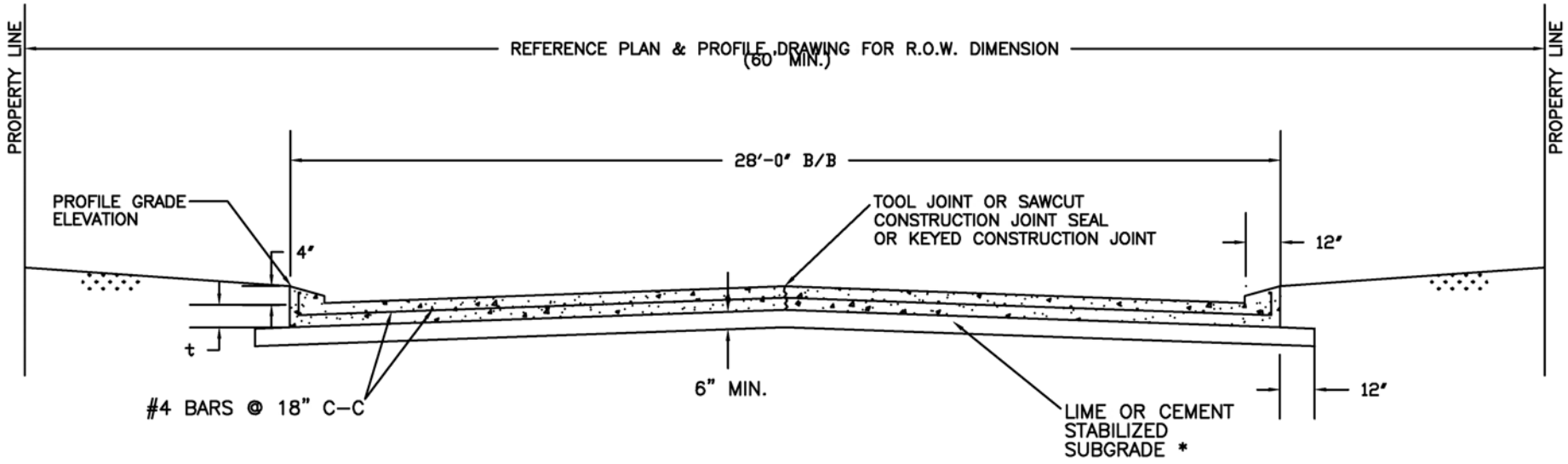

SUBGRADE *
REFER TO RULES AND REGULATIONS FOR SUBDIVISIONS FOR TREATMENT AND COMPACTION

NOTE:
PAVEMENT SECTIONS TO BE LOCATED IN CENTER OF R.O.W.

SUBDIVISION STANDARDS FOR

TYPICAL SECTION FOR CONCRETE PAVEMENT WITH 4" X 12" MONOLITHIC CURB FOR RESIDENTIAL STREETS

N.T.S.

DATE: 7–10–96 PREPARED BY GALVESTON COUNTY ENGINEERING DEPARTMENT DRAWNING P – 5

4" X 12" MONOLITHIC AND TRANSITION CURB NOTES:

1. 6– INCH CONCRETE CURB TO BE CONSTRUCTED ON ALL ESPLANADES, ISLANDS AND NON–RESIDENTIAL STREETS. RESIDENTIAL STREETS MAY BE CONSTRUCTED WITH EITHER 6–INCH CONCRETE CURB OR 4– INCH X 12–INCH CONCRETE CURB AS NOTED ON PLANS.
2. ALL 4–INCH X 12–INCH CONCRETE CURBS TO BE POURED MONOLITHICLY WITH PROPOSED CONCRETE PAVEMENT.
3. TRANSITIONS FROM 6–INCH CONCRETE CURB TO 4–INCH CONCRETE CURB TO BE ACCOMPLISHED WITHIN 10 FEET, UNLESS OTHERWISE SHOWN. IF THIS 10–FOOT TRANSITION CURB IS NOT POURED MONOLITHICLY WITH THE PAVEMENT THEN REINFORCING STEEL AS SHOWN IN TYPICAL DETAIL 4–INCH X 12–INCH TRANSITION CURB IS TO BE INSTALLED.

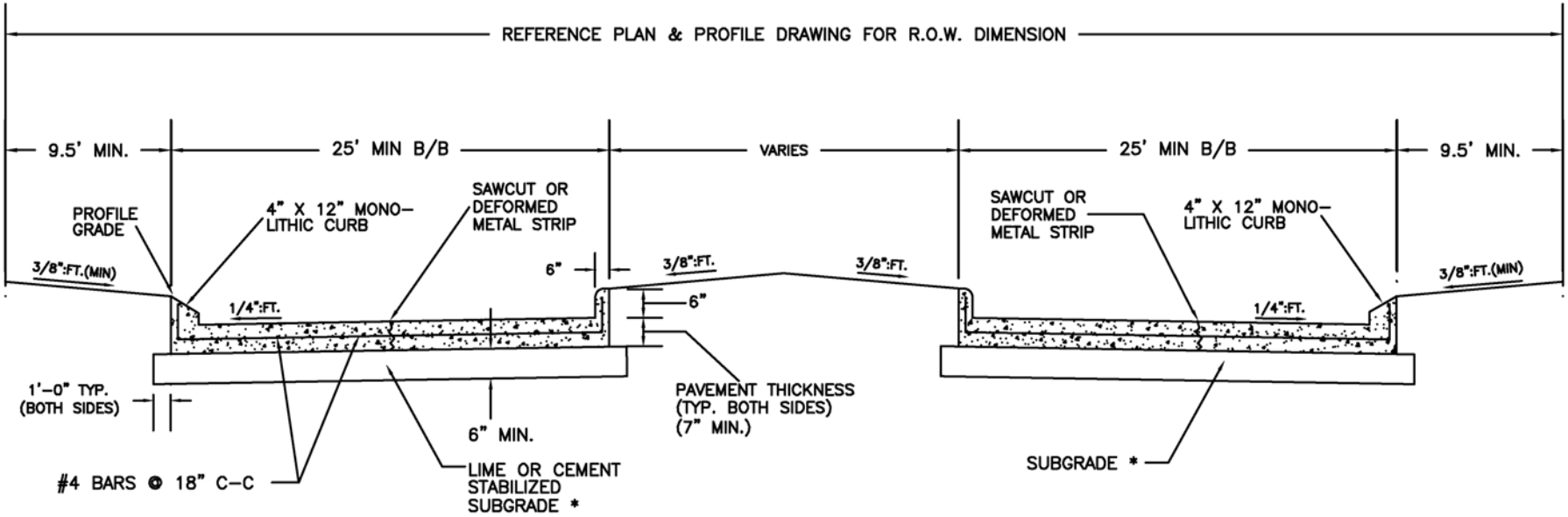

SUBGRADE *
REFER TO RULES AND REGULATIONS FOR SUBDIVISIONS FOR TREATMENT AND COMPACTION

SUBDIVISION STANDARDS FOR

TYPICAL SECTION FOR COMBINATION CURB AND DIVIDED RESIDENTIAL STREETS

N.T.S.

DATE: 7–10–96 PREPARED BY GALVESTON COUNTY ENGINEERING DEPARTMENT DRAWNING P – 6

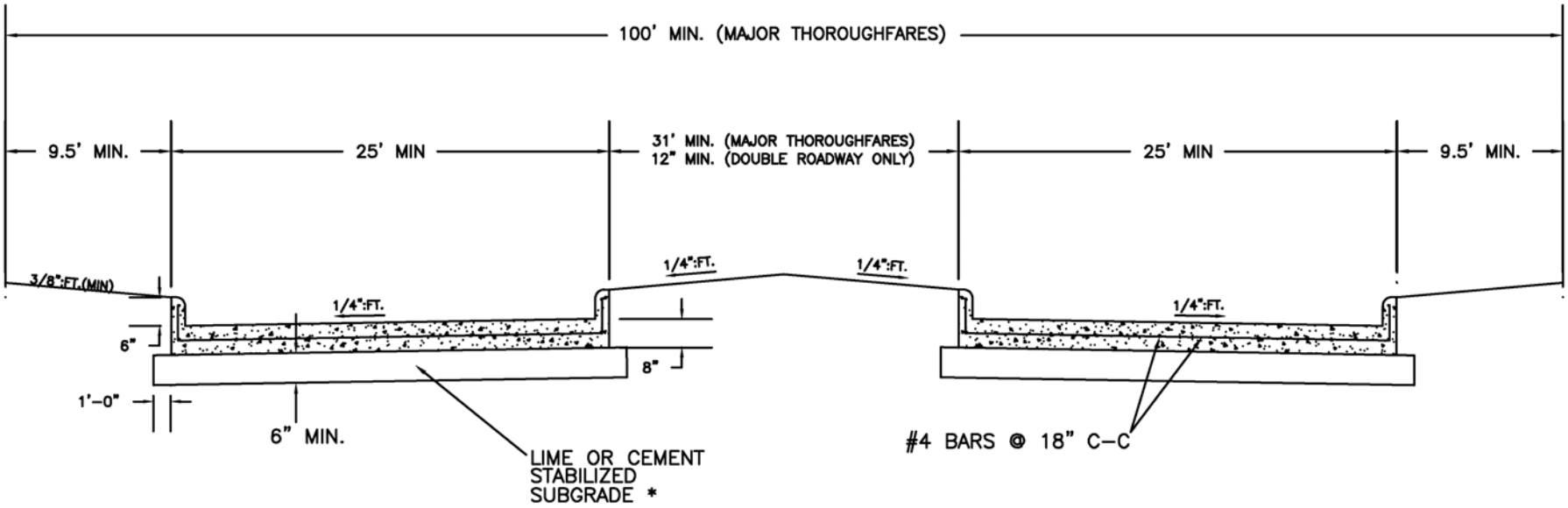

SUBGRADE *

REFER TO RULES AND REGULATIONS FOR SUBDIVISIONS FOR TREATMENT AND COMPACTION

SUBDIVISION STANDARDS FOR

TYPICAL SECTIONS FOR MAJOR THOROUGHFARES AND ROADWAYS

N.T.S.

DATE: 7-10-96 PREPARED BY GALVESTON COUNTY ENGINEERING DEPARTMENT DRAWNING P - 7

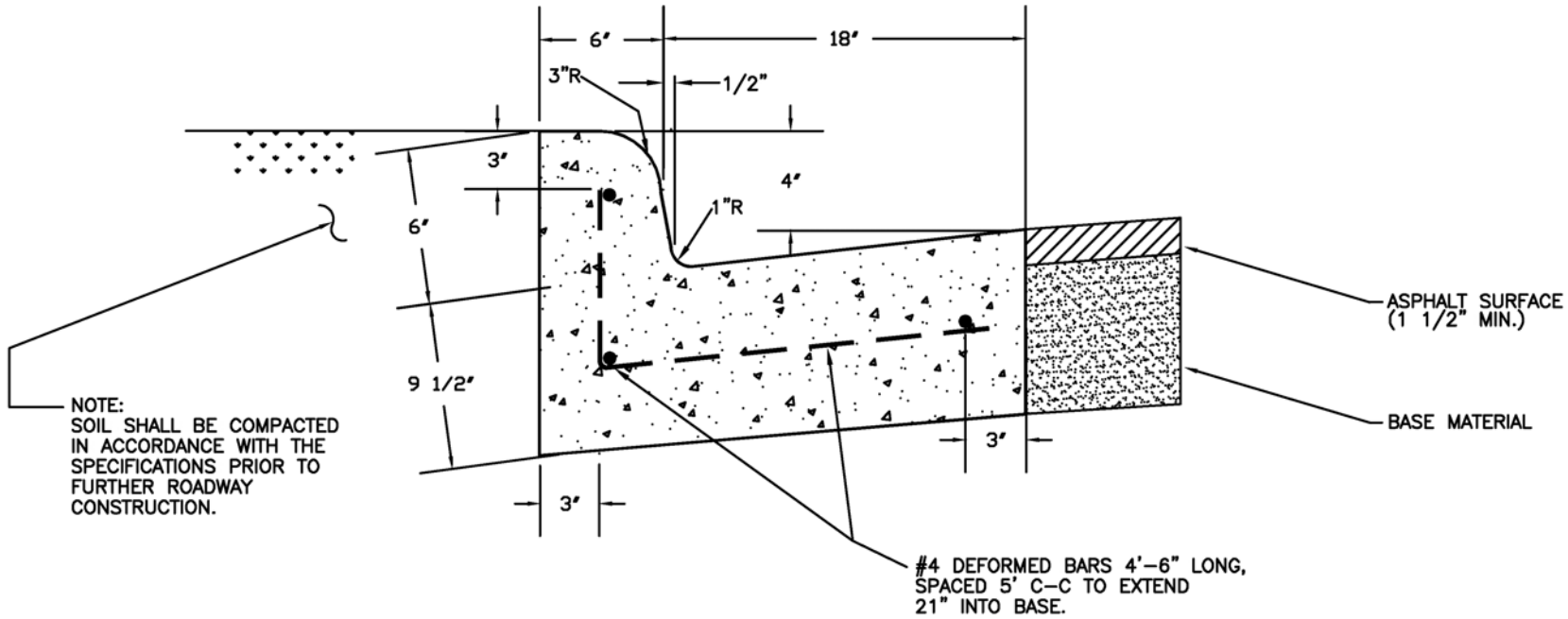

SUBDIVISION STANDARDS FOR

MONOLITHIC CURB AND GUTTER

N.T.S.

DATE: 7-10-96 PREPARED BY GALVESTON COUNTY ENGINEERING DEPARTMENT DRAWNING P - 8

4" x 12" MONOLITHIC AND TRANSITION CURB NOTES:

1. 6–INCH CONCRETE CURB TO BE CONSTRUCTED ON ALL ESPLANADES, ISLANDS AND NON–RESIDENTIAL STREETS. RESIDENTIAL STREETS MAY BE BE CONSTRUCTED WITH EITHER 6–INCH CONCRETE CURB OR 4–INCH x 12–INCH CONCRETE CURB AS NOTED ON PLANS.
2. ALL 4–INCH x 12–INCH CONCRETE CURBS TO BE POURED MONOLITHICLY WITH PROPOSED CONCRETE PAVEMENT.
3. TRANSITIONS FROM 6–INCH CONCRETE CURB TO 4–INCH x 12–INCH CONCRETE CURB TO BE ACCOMPLISED WITHIN 10 FEET, UNLESS OTHERWISE SHOWN. IF THIS 10–FOOT TRANSITION CURB IS NOT POURED MONOLITHICLY WITH THE PAVEMENT, THEN REINFORCING STEEL AS SHOWN BELOW IN TYPICAL DETAIL 4–INCH x 12–INCH TRANSITION CURB IS TO BE INSTALLED.

t = THICKNESS OF CONCRETE PAVEMENT REFER TO SUBDIVISION RULES AND REGULATIONS

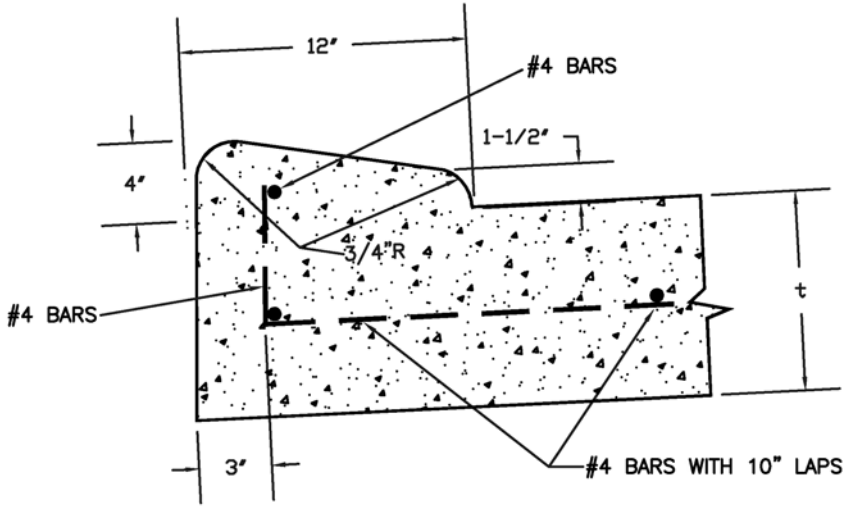

SUBDIVISION STANDARDS FOR

TYPICAL DETAIL

4" x 12" MONOLITHIC CURB

N.T.S.

4" x 12" MONOLITHIC AND TRANSITION CURB NOTES:

1. 6–INCH CONCRETE CURB TO BE CONSTRUCTED ON ALL ESPLANADES, ISLANDS AND NON–RESIDENTIAL STREETS. RESIDENTIAL STREETS MAY BE BE CONSTRUCTED WITH EITHER 6–INCH CONCRETE CURB OR 4–INCH x 12–INCH CONCRETE CURB AS NOTED ON PLANS.
2. ALL 4–INCH x 12–INCH CONCRETE CURBS TO BE POURED MONOLITHICLY WITH PROPOSED CONCRETE PAVEMENT.
3. TRANSITIONS FROM 6–INCH CONCRETE CURB TO 4–INCH x 12–INCH CONCRETE CURB TO BE ACCOMPLISED WITHIN 10 FEET, UNLESS OTHERWISE SHOWN. IF THIS 10–FOOT TRANSITION CURB IS NOT POURED MONOLITHICLY WITH THE PAVEMENT, THEN REINFORCING STEEL AS SHOWN BELOW IN TYPICAL DETAIL 4–INCH x 12–INCH TRANSITION CURB IS TO BE INSTALLED.

t = THICKNESS OF CONCRETE PAVEMENT REFER TO SUBDIVISION RULES AND REGULATIONS

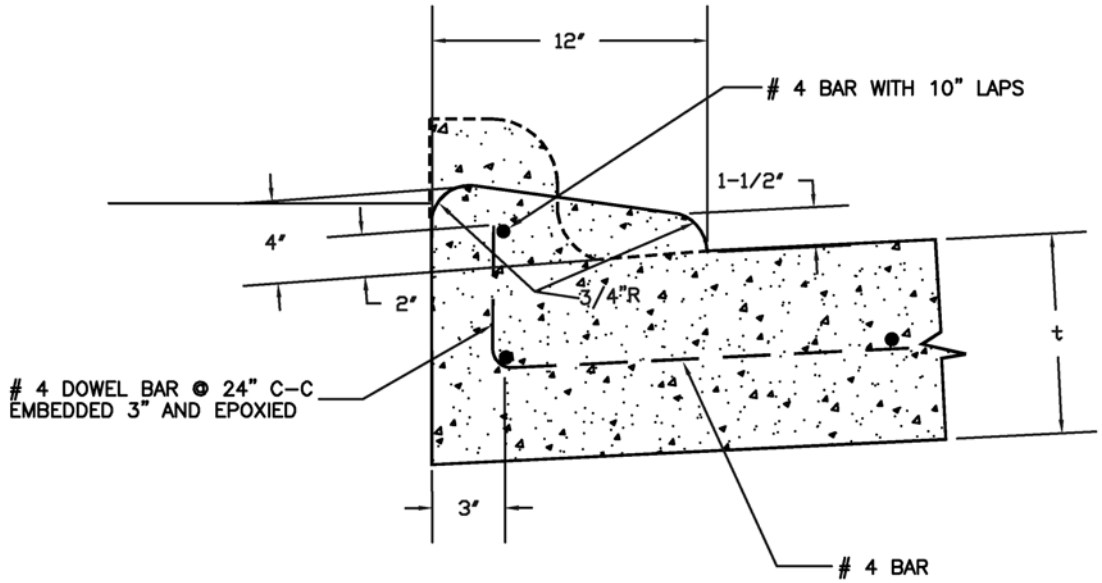

SUBDIVISION STANDARDS FOR

TYPICAL DETAIL

4" x 12" TRANSITION CURB

N.T.S.

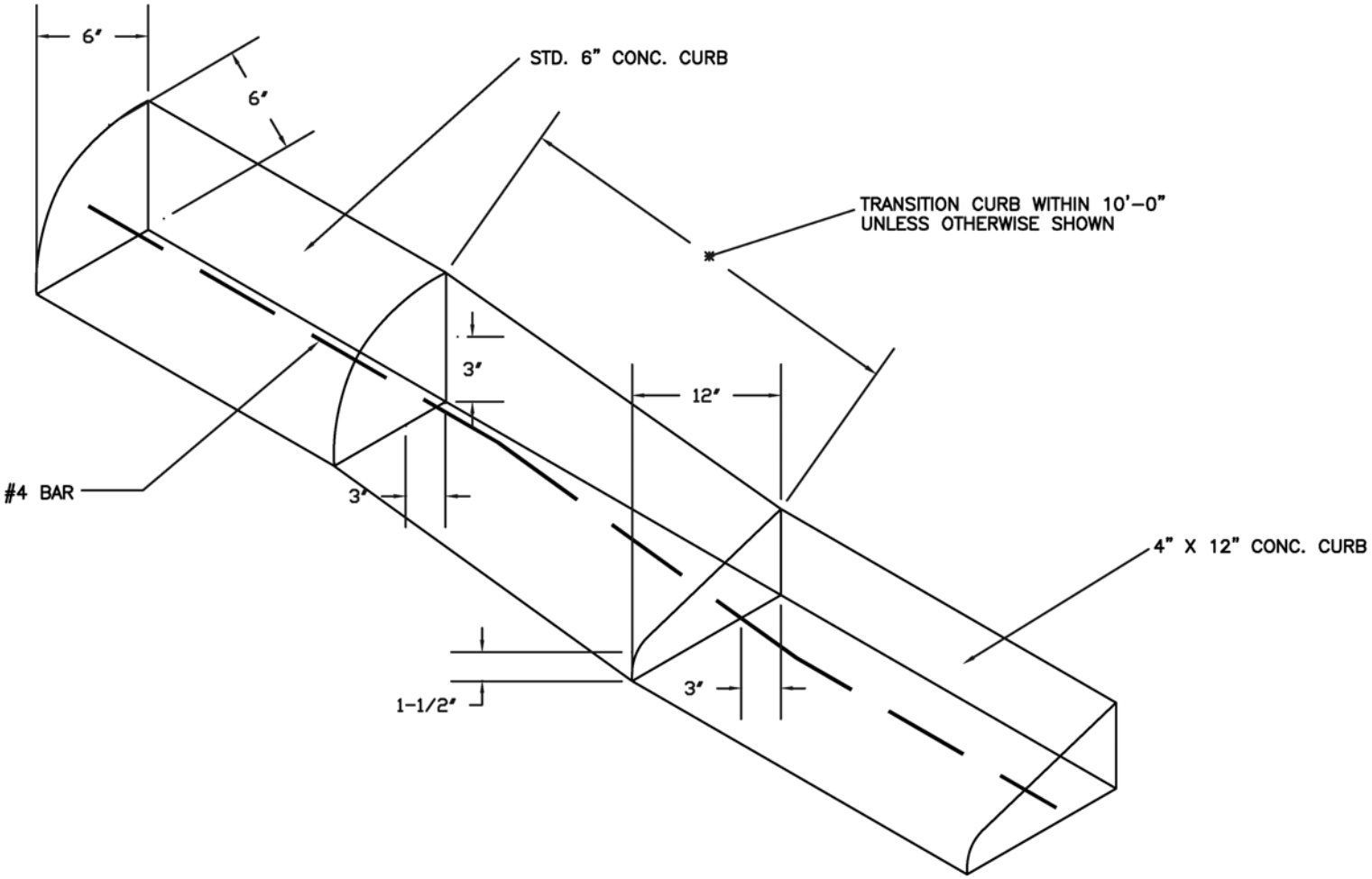

SUBDIVISION STANDARDS FOR

TYPICAL CURB TRANSITION

N.T.S.

DATE: 7-10-96 PREPARED BY GALVESTON COUNTY ENGINEERING DEPARTMENT DRAWING P - 11

NOTES:

1. DOWELS FOR PAVEMENT EXPANSION SHALL BE 3/4" Ø FOR 6" TO LESS THAN 7" PAVEMENT THICKNESS, 1" Ø FOR 7" TO LESS THAN 9" PAVEMENT THICKNESS AND 1 1/4 Ø FOR 9" OR GREATER PAVEMENT THICKNESS
2. EXPANSION JOINT SHALL BE PLACED AT THE END OF EACH CURB RETURN AND AT MAXIMUM 80' SPACING.
3. ALL JOINT SEAL MATERIAL SHALL BE ASPHALT RUBBER ACCORDANCE WITH ASTM DESIGNATION D3405.
4. IF DEFORMED METAL STRIPS ARE ALLOWED, THEY SHALL BE STAKED IN PLACE WITH #3 BARS.
5. PRE-MANUFACTURED JOINT PLATE.

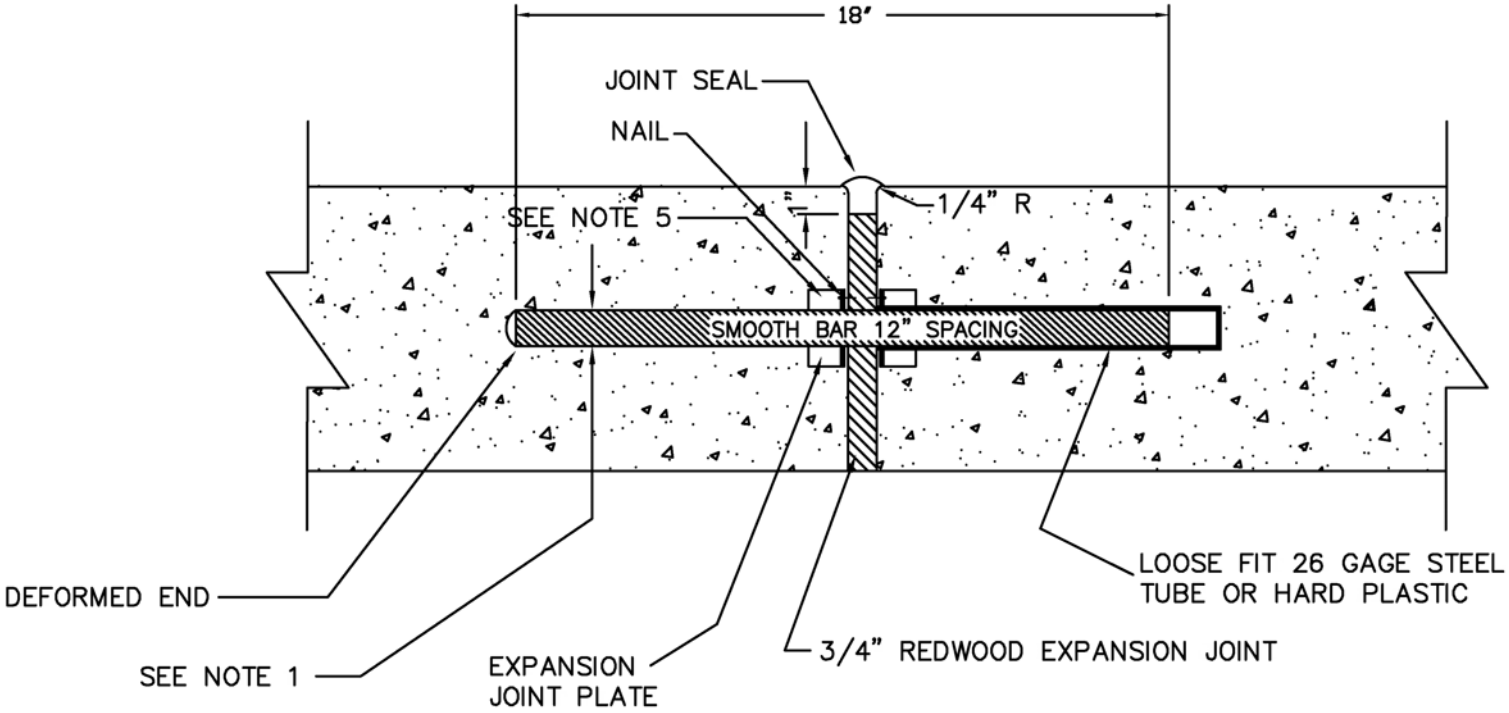

SUBDIVISION STANDARDS FOR

EXPANSION JOINT DETAIL

N.T.S.

t = THICKNESS OF CONCRETE PAVEMENT
REFER TO SUBDIVISION RULES AND
REGULATIONS

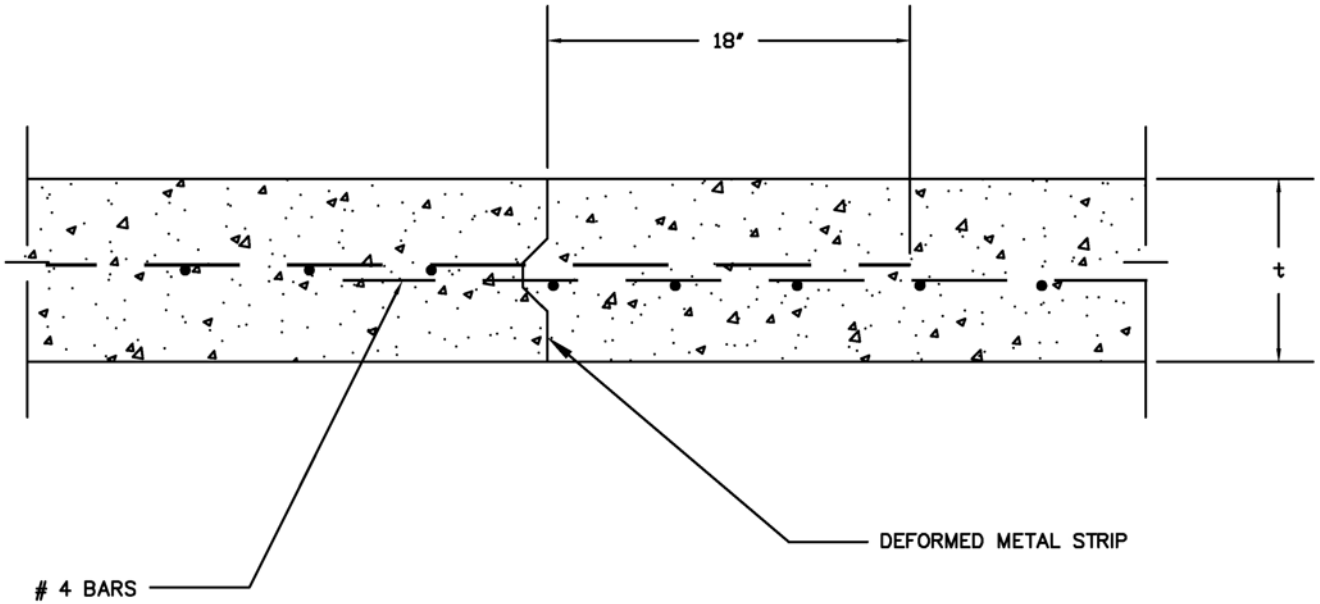

SUBDIVISION STANDARDS FOR

CONSTRUCTION JOINT DETAIL

N.T.S.

t = THICKNESS OF CONCRETE PAVEMENT
REFER TO SUBDIVISION RULES AND REGULATIONS

NOTES FOR TIE–IN:

1. REINFORCING CENTERED IN PROPOSED PAVEMENT, 3" CLEAR AT EDGES.
2. SAW–CUT & REMOVE 2' EXISTING PAVEMENT OR PAVEMENT WITH CURB, EXPOSE AND CLEAN EXISTING REINFORCING.
3. 24 BAR DIAMETER LAP OR WELD, IF DIRECTED.

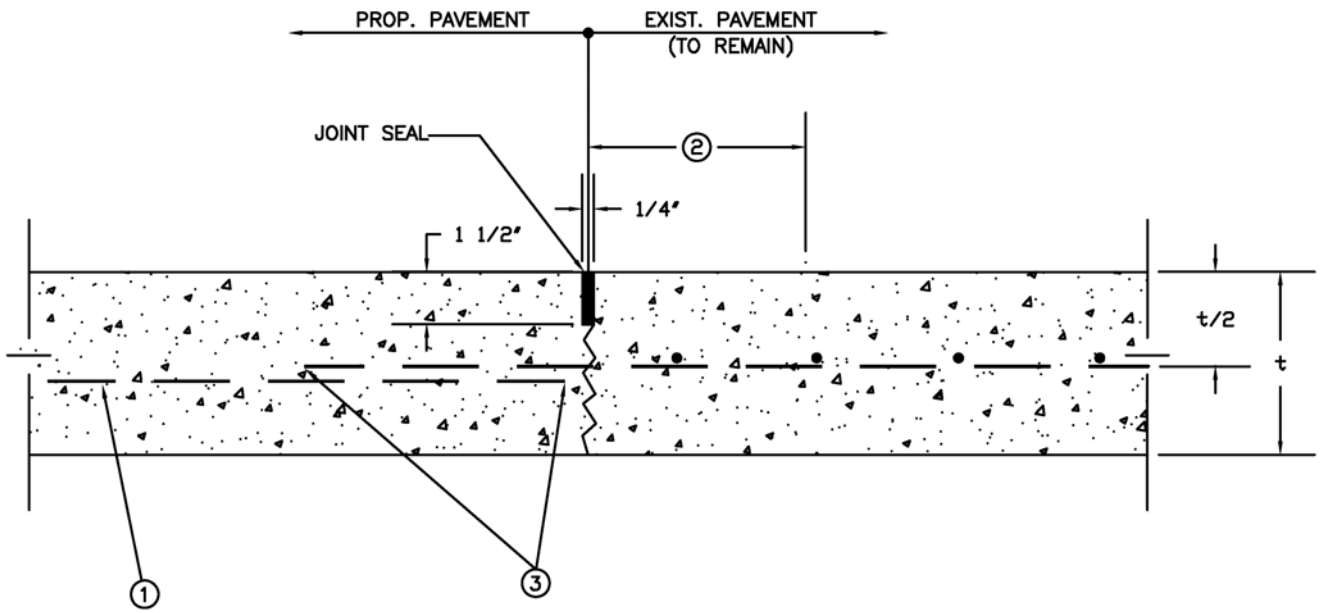

SUBDIVISION STANDARDS FOR

CONCRETE TO CONCRETE STANDARD PAVEMENT TIE-IN

N.T.S.

t = THICKNESS OF CONCRETE PAVEMENT
REFER TO SUBDIVISION RULES AND
REGULATIONS

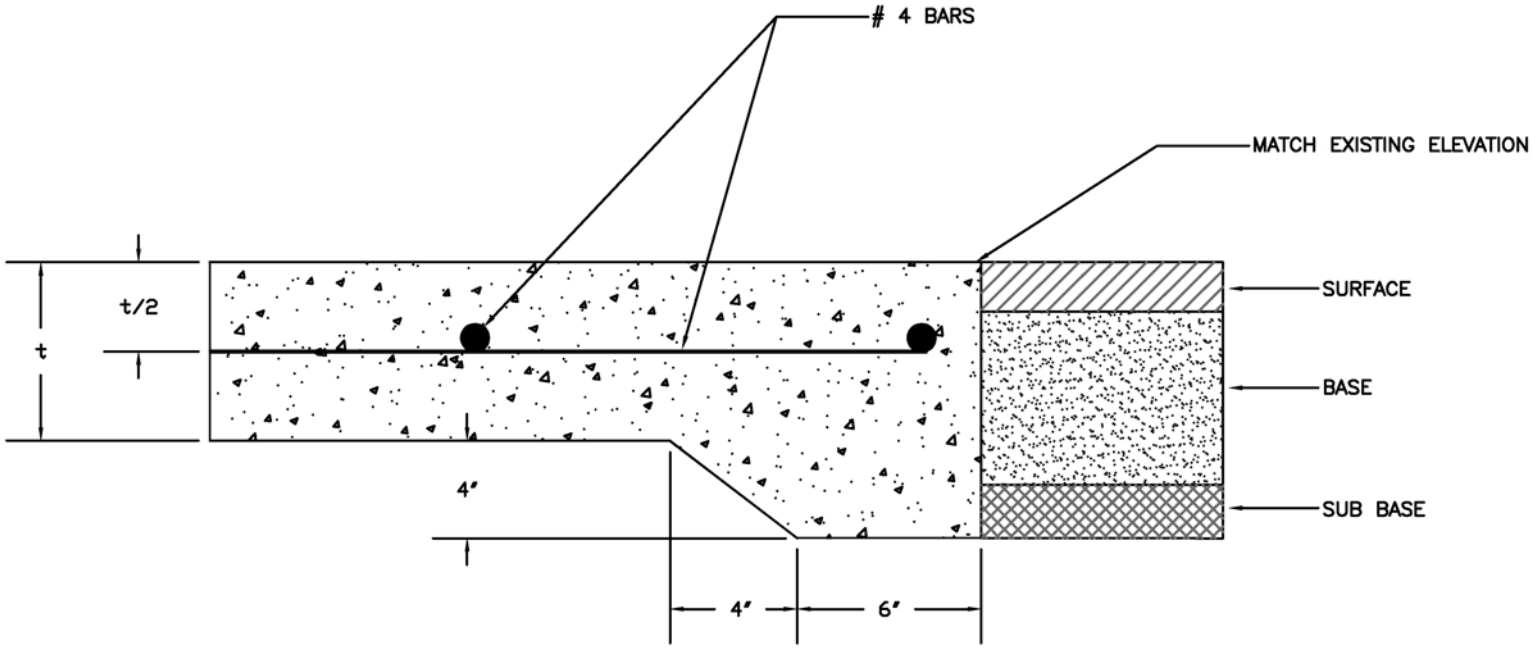

SUBDIVISION STANDARDS FOR

CONCRETE TO ASPHALT STANDARD PAVING HEADER

N.T.S.

DATE: 7–10–96 PREPARED BY GALVESTON COUNTY ENGINEERING DEPARTMENT DRAWNING P – 15

t = THICKNESS OF CONCRETE PAVEMENT
REFER TO SUBDIVISION RULES AND
REGULATIONS

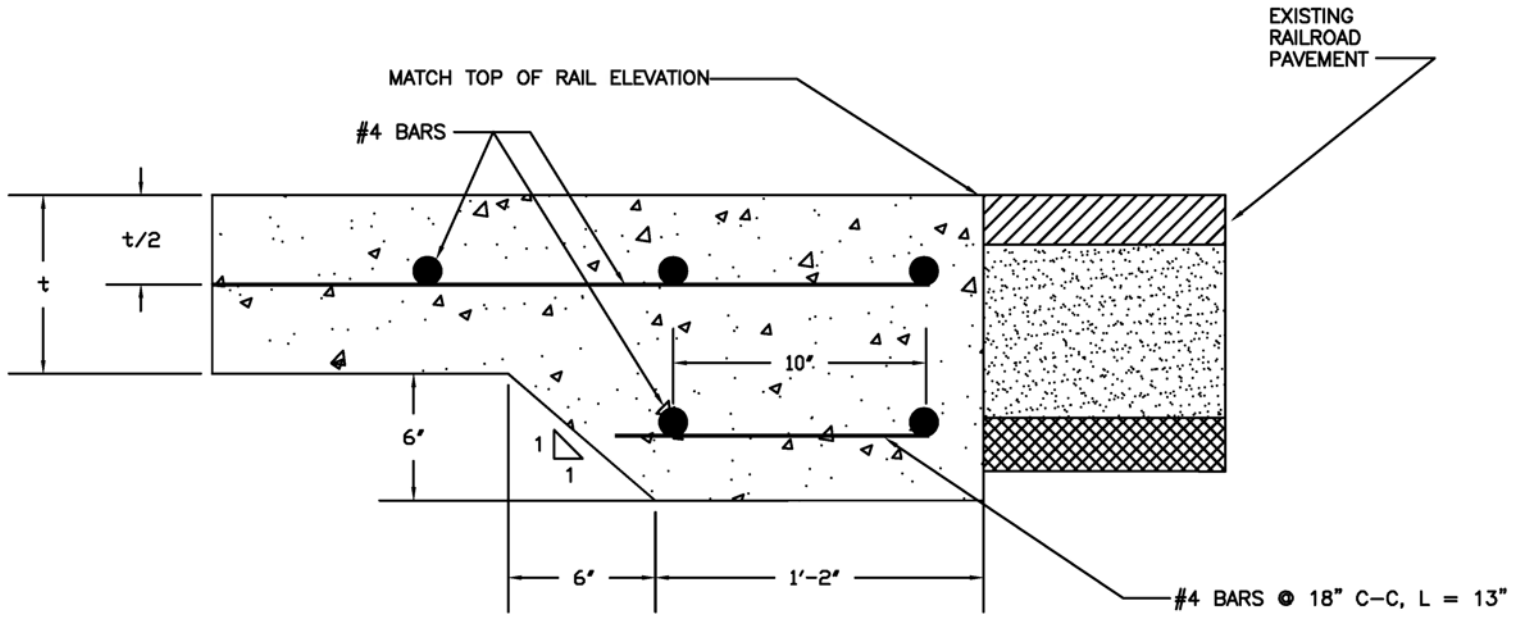

SUBDIVISION STANDARDS FOR

RAILROAD HEADER DETAIL

N.T.S.

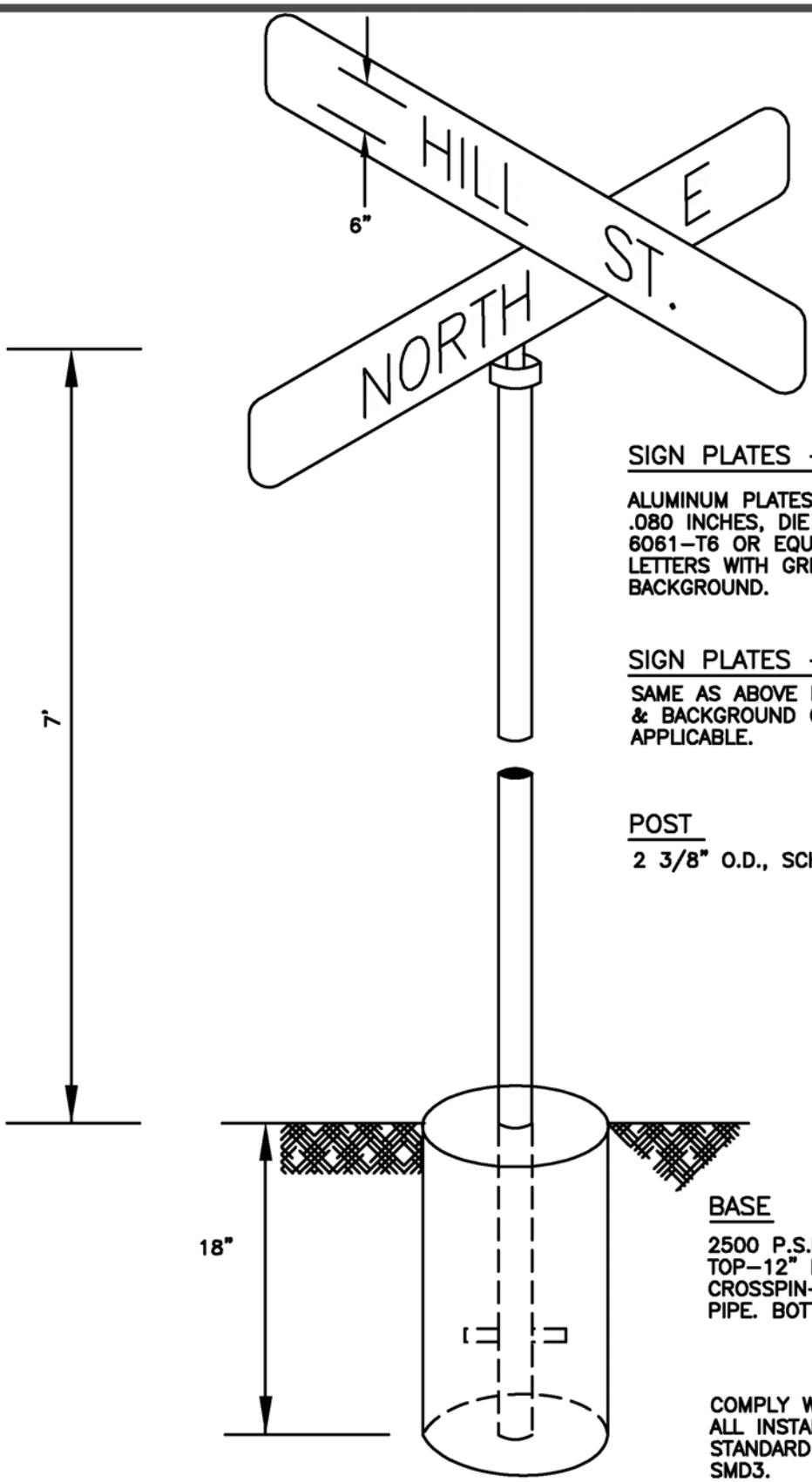

SIGN PLATES – STREET SIGNS

ALUMINUM PLATES–MINIMUM THICKNESS .080 INCHES, DIE CUT, ALCOA ALLOY 6061–T6 OR EQUAL. REFLECTIVE WHITE LETTERS WITH GREEN REFLECTIVE BACKGROUND.

SIGN PLATES – TRAFFIC SIGNS

SAME AS ABOVE BUT LETTER & BACKGROUND COLOR AS APPLICABLE.

POST

2 3/8" O.D., SCH. 40 GALV. PIPE.

BASE

2500 P.S.I. CONCRETE TOP–12" DIA., FLUSH WITH GRADE. CROSSPIN–3/8" X 6" THROUGH PIPE. BOTTOM–12" DIAMETER.

COMPLY WITH MUTCD IN ALL INSTALLATIONS AND TX. DOT STANDARD DETAILS SMD1 THRU SMD3.

TRAFFIC & STREET SIGN DESIGN STANDARDS

N.T.S.

DATE: SEPTEMBER 1996 PREPARED BY GALVESTON COUNTY ENGINEERING DEPARTMENT DRAWNING P–17

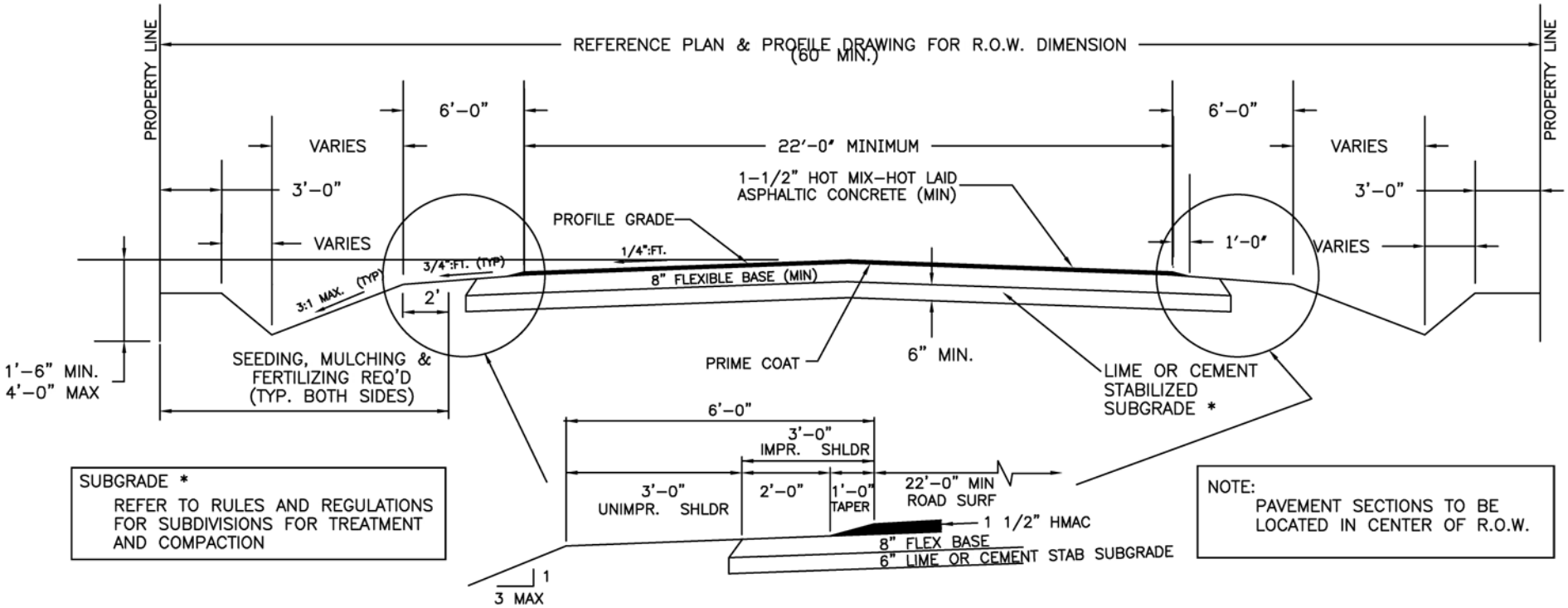

SUBGRADE *

REFER TO RULES AND REGULATIONS FOR SUBDIVISIONS FOR TREATMENT AND COMPACTION

NOTE:

PAVEMENT SECTIONS TO BE LOCATED IN CENTER OF R.O.W.

SUBDIVISION STANDARDS FOR

FLEXIBLE BASE PAVEMENT

DITCH SECTION

N.T.S.

DATE: 7-10-96 PREPARED BY GALVESTON COUNTY ENGINEERING DEPARTMENT DRAWNING P - 1

FIGURE 1 Harris County Site Runoff Curves for 25-Year Storm Frequency

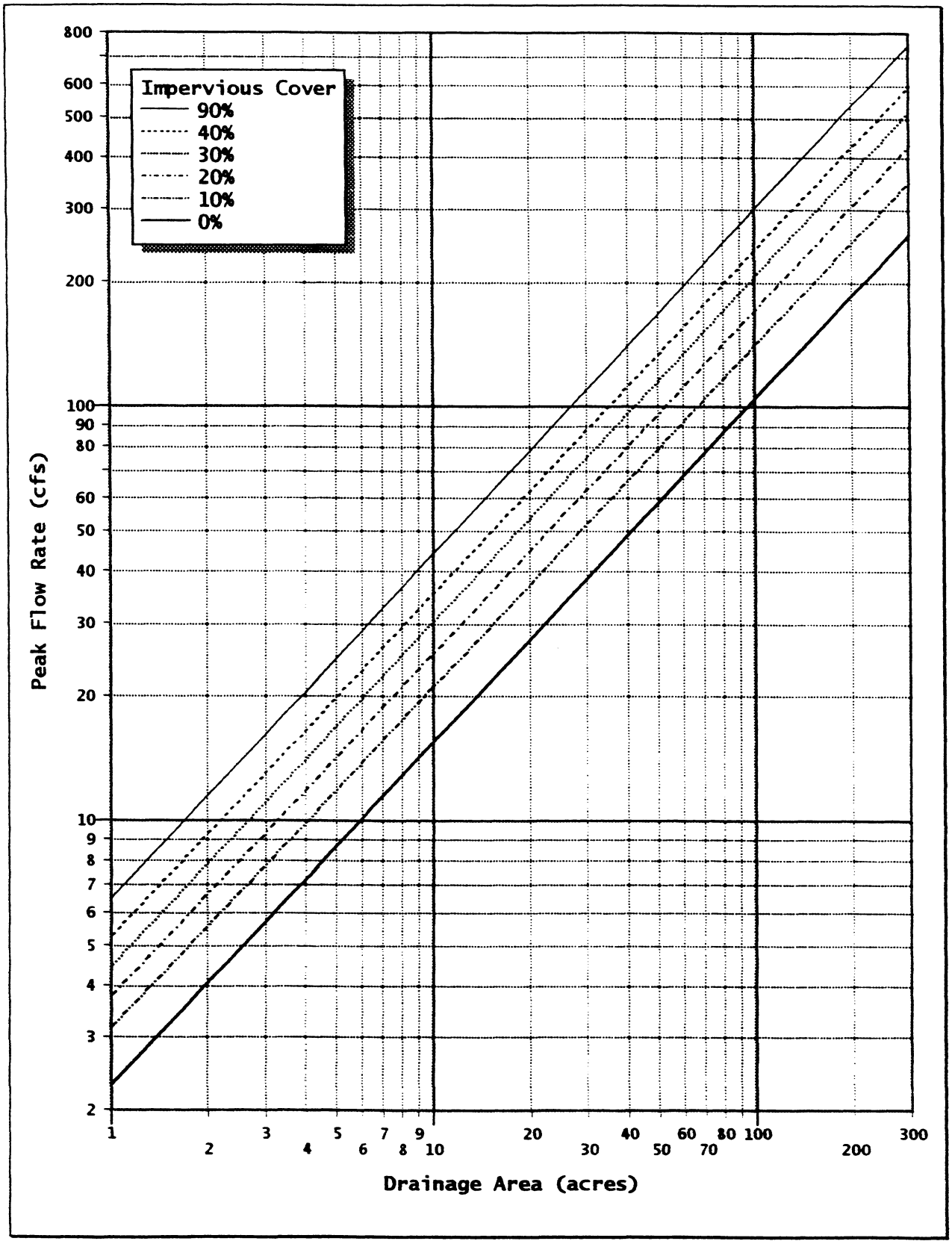

FIGURE 2 Harris County Site Runoff Curves for 100-Year Storm Frequency

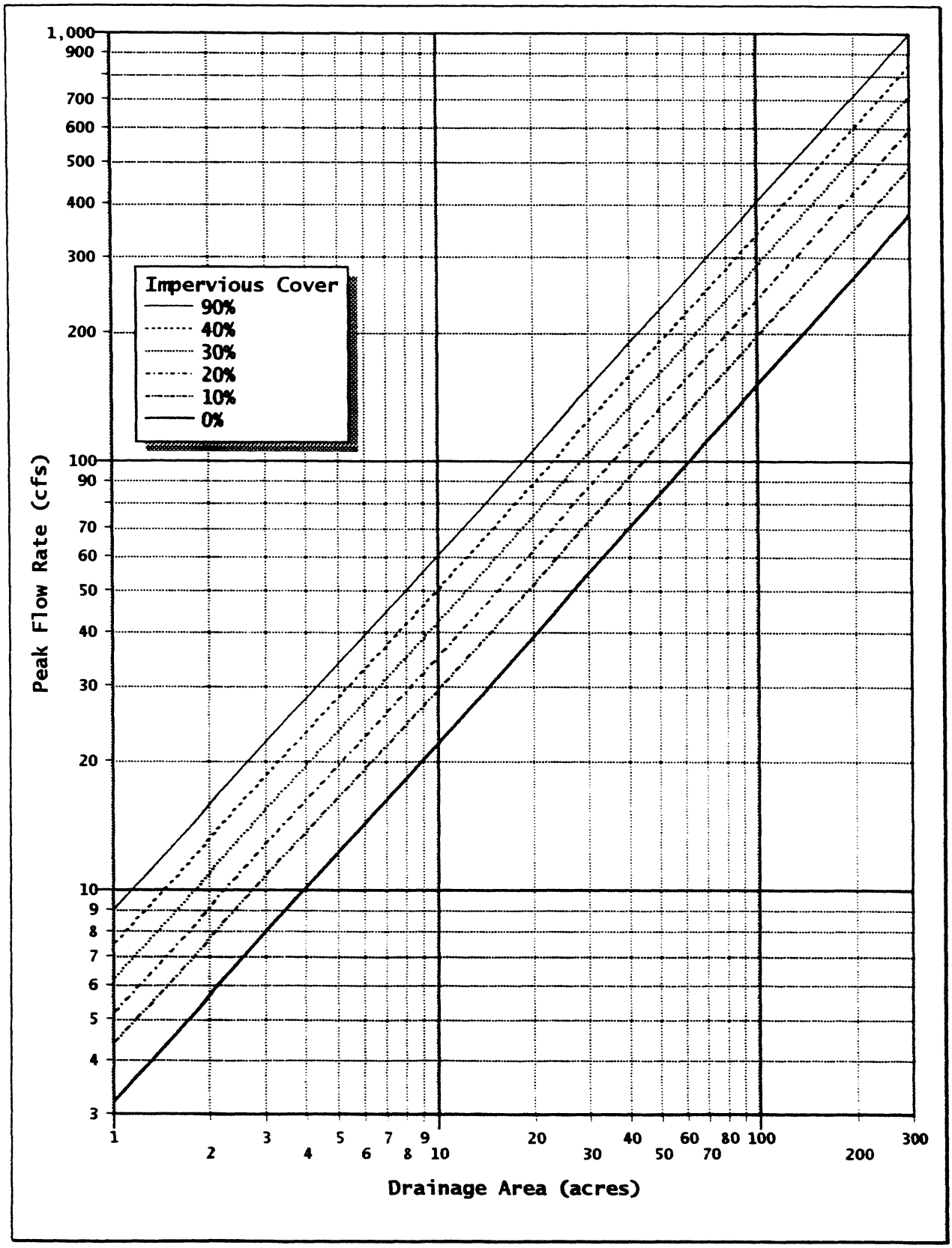

Figure 1

Texas Coastal Management Program

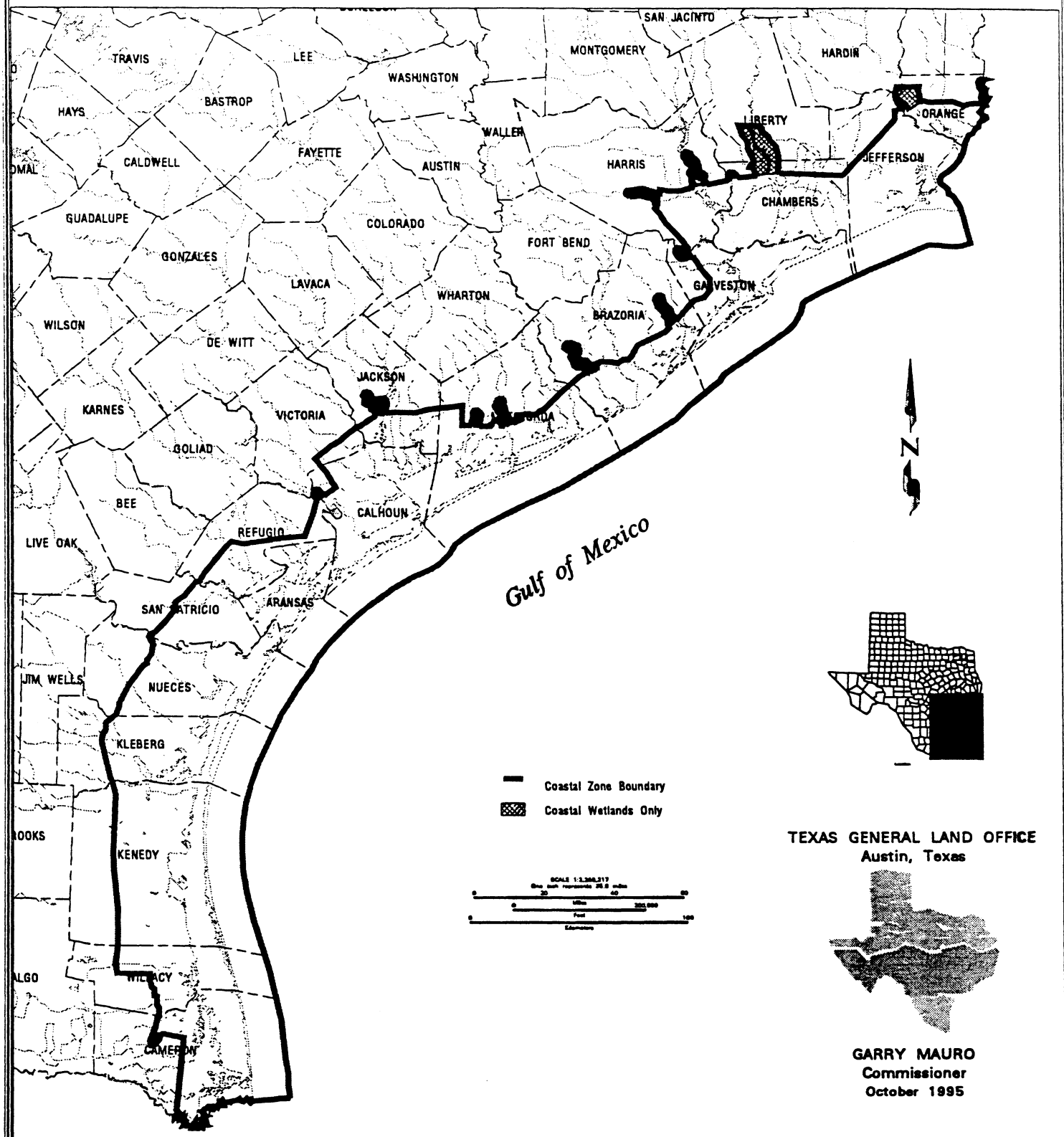

Figure 5
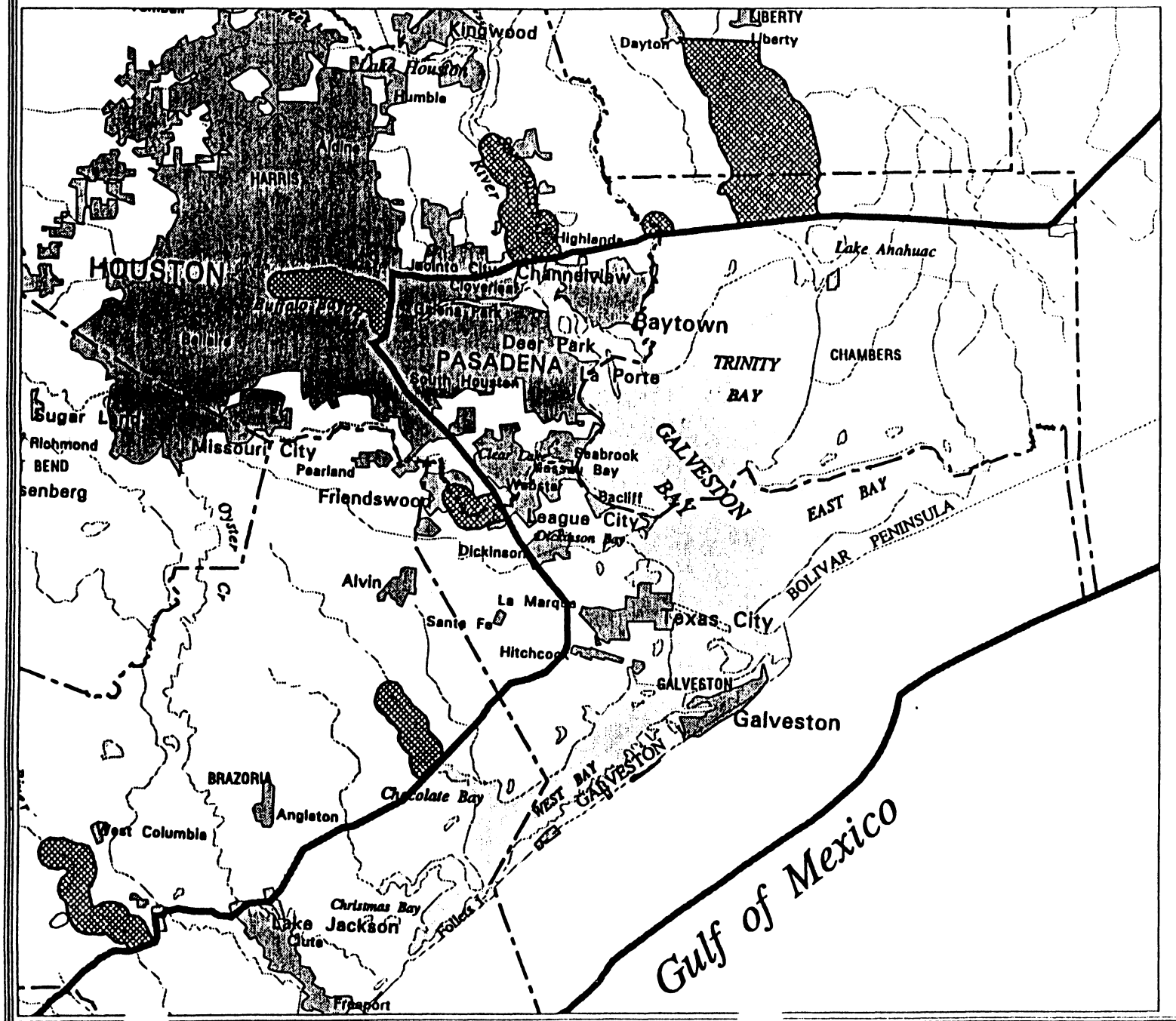
Galveston - Houston Area