COUNTY APPROVAL:
SIGNATURE _____ DATE_____

GALVESTON COUNTY BEACH PAVILION

CIVIL DRAWINGS
C0.1 GENERAL NOTES
C1.1 SITE PLAN
C1.2 WATER & SANITARY PLAN
C1.3 PAVING & DRAINAGE PLAN
C1.4 SWPPP PLAN
C2.1 PAVING DETAILS
C2.2 STORM SEWER DETAILS
C2.3 SWPPP DETAILS

ARCHITECTURAL DRAWINGS
G0.1 GENERAL NOTES
G0.2 CODE
G0.3 TAS/ADA
A0.1 SITE PLAN
A0.2 EXISTING CONTOURS
A1.1 LOWER LEVEL PLAN
A1.2 UPPER LEVEL PLAN
A1.3 ROOF PLAN AND DETAILS
A1.4 REFLECTED CEILING PLAN
A1.5 FLOORING/ PAVING PLAN
A2.1 EXTERIOR ELEVATIONS
A2.2 EXTERIOR ELEVATIONS
A2.3 EXT. ELEV. OF COURTYARD FACES
A2.4 EXT. ELEV. OF SCREEN WALL
A3.1 BUILDING SECTIONS
A3.2 BUILDING SECTIONS
A3.3 WALL SECTIONS
A3.4 WALL SECTIONS
A6.1 SCHEDULES
A6.2 WINDOW SCHEDULE
A7.1 INTERIOR ELEVATION OF GLAZED TILE
A7.2 ENLARGED - NORTH ELEVATION
A7.3 CASEWORK
A7.4 RESTROOM GATE DRAWINGS
A7.5 RESTROOM ELEVATIONS
A7.6 DISPLAY CASE DRAWINGS

STRUCTURAL DRAWINGS
S0.1 GENERAL NOTES
S0.2 GENERAL NOTES
S1.1 FOUNDATION STEM WALL / FOOTING PLAN
S1.2 FOUNDATION PLAN
S1.3 ENLARGED RAMP-STAIR FOUNDATION PLAN
S2.1 WALL LAYOUT
S3.1 ROOF FRAMING PLAN
S3.2 ROOF PLAN
S4.1 FOUNDATION DETAILS
S4.2 FOUNDATION DETAILS
S4.3 FOUNDATION DETAILS
S4.4 FOUNDATION DETAILS
S4.5 PRESTRESSED CONCRETE PILING
S4.6 FOUNDATION DETAILS
S5.1 BLOCK WALL DETAILS
S5.2 FRAMING DETAILS
S5.3 FRAMING DETAILS

MECHANICAL DRAWINGS
M1.0 MAIN LEVEL MECHANICAL PLAN
M2.0 LEGEND AND NOTES
M3.0 MECHANICAL SPECIFICATIONS
M4.0 MECHANICAL DETAILS

PLUMBING DRAWINGS
P1.0 LOWER LEVEL SEWER PLAN
P.1.1 MAIN LEVEL SEWER PLAN
P1.2 LOWER LEVEL HOT & COLD WATER PLAN
P1.2 MAIN LEVEL HOT & COLD WATER PLAN
P2.0 PLUMBING FIXTURE SPECIFICATION
P2.1 PLUMBING FIXTURE SPECIFICATION
P2.2 SEWER AND WATER DIAGRAMS
P3.0 PLUMBING LEGEND, NOTES, & REQUIREMENTS
P4.0 PLUMBING SPECIFICATIONS
P5.0 PLUMBING DETAILS

ELECTRICAL DRAWINGS
E1.0 LOWER LEVEL POWER & LIGHTING PLAN
E1,1 MAIN LEVEL POWER PLAN
E1.2 MAIN LEVEL LIGHTING PLAN
E2.0 PANEL SCHEDULE & LOAD SUMMARY
E3.0 ELECTRICAL SPECIFICATIONS
E3.1 ELECTRICAL SPECIFICATIONS

GALVESTON COUNTY
BEACH PAVILION
CRYSTAL BEACH, TX 77650

BE–Arc LLC Project No : C–17–003.01

eas easterwood ARCHITECTS STUDIO
2328 BALL STREET
GALVESTON TEXAS 77550
409-354-8976
EASTERWOOD@BE-ARC.COM

DATE	REVISION

BID SET

DATE ISSUED: 08/10/2018

COPYRIGHT 2018

COUNTY APPROVAL:
SIGNATURE ____________________ DATE__________

GENERAL NOTES:

1. REFERENCE LINES AND GRADES

   A. THE OWNER SHALL PROVIDE REFERENCES FOR LINE AND GRADE. IT SHALL BE THE CONTRACTOR'S RESPONSIBILITY TO MAINTAIN THE REFERENCE POINTS AND REPLACE THEM IF LOST OR DAMAGED.

2. EXISTING UTILITIES

   A. VERIFY LOCATION AND ELEVATION OF EXISTING FACILITIES PRIOR TO CONSTRUCTION OF PROPOSED FACILITIES.
   B. PROTECT ALL EXISTING UTILITIES DURING CONSTRUCTION.
   C. THE TYPE, SIZE, LOCATION AND OWNERSHIP OF EXISTING UTILITIES HAVE BEEN OBTAINED FROM RECORD DRAWINGS FURNISHED BY THE OWNER. INFORMATION DERIVED FROM THESE SOURCES IS BELIEVED TO BE THE MOST RELIABLE AVAILABLE AND IS PROVIDED FOR THE CONTRACTOR'S INFORMATION ONLY. THE CONTRACTOR SHALL NOTIFY EACH PIPELINE OWNER AND VERIFY ITS ACTUAL FIELD LOCATION PRIOR TO EXCAVATION. NO WARRANTY IS GIVEN AS TO THE ACCURACY OR COMPLETENESS OF UTILITY LOCATION SHOWN ON THESE DRAWINGS.
   D. AT LEAST 30 DAYS PRIOR TO COMMENCING ANY EXCAVATING OR OTHER CONSTRUCTION ACTIVITY IN THE VICINITY OF THE UTILITY, NOTIFY THE TEXAS EXCAVATION SAFETY SYSTEM AT 1–800–DIG–TESS (344–8377).
   E. NO EXCAVATING OR OTHER CONSTRUCTION ACTIVITY SHALL BE CONDUCTED IN THE IMMEDIATE VICINITY OF A PIPELINE IN THE ABSENCE OF A PIPELINE REPRESENTATIVE. THE CONTRACTOR SHALL DETERMINE THE EXACT LOCATION BEFORE COMMENCING WORK, AND SHALL BE RESPONSIBLE FOR ANY DAMAGES CAUSED BY HIS FAILURE TO EXACTLY LOCATE AND PRESERVE THESE UNDERGROUND FACILITIES.
   F. OVERHEAD LINES MAY EXIST ON THE PROPERTY. THEY HAVE NOT BEEN MARKED SINCE THEY ARE CLEARLY VISIBLE. THE CONTRACTOR SHALL LOCATE THEM PRIOR TO BEGINNING ANY CONSTRUCTION. TEXAS LAW, SECTION 752, HEALTH AND SAFETY CODE, FORBIDS ALL ACTIVITIES IN WHICH PERSONS OR THINGS MAY COME WITHIN 6 FEET OF LIVE OVERHEAD HIGH VOLTAGE LINES. CONTRACTORS AND OWNERS ARE LEGALLY RESPONSIBLE FOR THE SAFETY OF CONSTRUCTION WORKERS UNDER THIS LAW. THIS LAW CARRIES BOTH CRIMINAL AND CIVIL LIABILITY.

3. EXISTING CONDITIONS:

   A. SPECIAL CARE SHALL BE TAKEN TO NOT DISTURB THE DRAINAGE.
   B. EXCESS EXCAVATED MATERIAL SHALL BE DISPOSED OF AS DIRECTED BY THE OWNER OR AS SPECIFIED ON THE DRAWINGS. SOIL SHALL NOT BE DEPOSITED GREATER THAN 4" DEEP WITHOUT PERMISSION FROM THE OWNER.

4. PERMITS:

   A. OWNER TO OBTAIN ALL PERMITS REQUIRED BY CITY, COUNTY, AND STATE AGENCIES PRIOR TO STARTING CONSTRUCTION OF UTILITY AND/OR CULVERTS WITHIN ROAD RIGHT–OF–WAYS.
   B. CONTRACTOR SHALL ASSURE HIMSELF THAT ALL CONSTRUCTION PERMITS HAVE BEEN OBTAINED PRIOR TO COMMENCEMENT OF WORK. REQUIRED PERMITS THAT CAN ONLY BE ISSUED TO CONTRACTOR SHALL BE OBTAINED AT HIS EXPENSE.

5. SAFETY:

   A. OBSERVE ALL FEDERAL, STATE, AND LOCAL SAFETY REGULATIONS WHEN WORKING IN OR NEAR PUBLIC ROAD RIGHT–OF–WAYS.
   B. CONTRACTOR SHALL COMPLY WITH OSHA REGULATIONS AND STATE OF TEXAS LAWS CONCERNING EXCAVATION, TRENCHING, AND SHORING.

DEFERRED SUBMITTALS:

1. DEFERRED SUBMITTALS IN ACCORDANCE WITH IBC 107.3.4.2 AND SHALL FIRST BE SUBMITTED TO THE PROJECT ARCHITECT AND/OR ENGINEER OF RECORD FOR REVIEW AND COORDINATION. FOLLOWING THE COMPLETION OF THE REVIEW AND COORDINATION BY THE ARCHITECT/ENGINEER OF RECORD; A SUBMITTAL MAY THEN BE MADE TO THE CITY BUILDING DEPARTMENT FOR REVIEW AND APPROVAL, WHICH SHALL INCLUDE A LETTER STATING THIS REVIEW AND COORDINATION HAS BEEN PERFORMED AND COMPLETED, AND PLANS AND CALCULATIONS FOR THE DEFERRED ITEMS ARE FOUND TO BE ACCEPTABLE WITH NO EXCEPTIONS.

2. THE LIST SHOULD CONTAIN BUT NOT NECESSARILY BE LIMITED TO THE FOLLOWING ITEMS:

   A. N/A

PAVING NOTES:

1. ALL MIXING, TRANSPORTATION, PLACING, AND CURING OF CONCRETE SHALL COMPLY WITH ACI 318–89.

2. REINFORCED CONCRETE PAVING SHALL CONSIST OF 6–INCH THICK CONCRETE SLAB WITH NO. 4 REBAR @ 15" C.C. EACH WAY. SUPPORT SLAB REINFORCEMENT WITH PLASTIC CHAIRS AT 24" O.C.E.W. MAXIMUM OR CONCRETE BRICKS AT 3'–0" O.C.E.W. MAXIMUM. ADDITIONAL CHAIR/SUPPORTS MAY BE REQUIRED AT DISCRETION OF ENGINEER.

3. SUBGRADE SHALL BE COMPACTED TO AT LEAST 95% OF THE STANDARD PROCTOR MAXIMUM DRY DENSITY (ASTM D698) WITH IN –1 TO +3% OF OPTIMUM MOISTURE CONTENT.

4. MINIMUM REINFORCEMENT LAP LENGTHS = 24 INCHES FOR (#4 REBAR).

5. CONCRETE SHALL HAVE 28–DAY STRENGTH OF 4,000 PSI MINIMUM WITH A 4–INCH TO 5–INCH SLUMP.

6. REINFORCEMENT: ASTM A615 GRADE 60 KSI MINIMUM.

7. EXPANSION JOINTS (EJ) SHALL BE PROVIDED EVERY 40 FEET MAXIMUM.

8. CONSTRUCTION JOINT (CJ) WITH METAL KEYWAY SHALL BE PROVIDED ON CENTERLINE OF ROAD (LONGITUDINALLY).

9. CONSTRUCTION JOINTS (CJ) WITH TOOLED JOINT OR METAL KEYWAY SHALL BE PROVIDED AT 20 FEET MAXIMUM SPACING ON CENTER (TRANSVERSLEY).

10. IF ALL THE SPLICES OCCUR AT THE SAME LONGITUDINAL LOCATION, TRANSVERSE CRACKS THAT OCCUR AT THE LOCATION COULD CAUSE STEEL BONDING FAILURE, RESULTING IN WIDE CRACKS AND PERFORMANCE PROBLEMS. TO MAKE SURE THAT ALL THE SPLICES DO NOT OCCUR AT THE SAME TRANSVERSE LOCATION, STAGGER SPLICES TO AVOID HAVING MORE THAN 1/3 OF THE SPLICES WITHIN A 2–FT. LONGITUDINAL LENGTH OF EACH LANE OF THE PAVEMENT. SEE PAVING DETAILS.

STORM SEWERS:

1. RCP PIPE:

   A. ALL STORM SEWERS SHALL BE CLASS III, TONGUE AND GROOVE RCP, OR APPROVED EQUAL.
   B. ALL JOINTS SHALL BE COMPLETELY SEALED WITH EVERGRIP 990 STRIPS OR APPROVED EQUAL.

2. HDPE PIPE:
   A. HDPE PIPE TO MEET AASHTO M 294 AND SHALL BE INSTALLED IN ACCORDING TO ASTM D 2321.
   B. COUPLING DEVICES SHALL PROVIDE A POSITIVE UNION OF ADJACENT PIPE SECTIONS WHILE EFFECTIVELY PREVENTING DISPLACEMENT OF THE PIPE ALONG ITS AXIS AND LATERAL DISPLACEMENT AT THE JOINT AND SHALL PROVIDE LEAK RESISTANT CONNECTIONS. COUPLINGS SHALL BE PROVIDED AND SUPPLIED BY THE SAME MANUFACTURER OF THE PIPE.

3. PRECAST CONCRETE MANHOLES

   A. PROVIDE MANHOLE SECTIONS, BASE SECTIONS, AND RELATED COMPONENTS CONFORMING TO ASTM C 478. PROVIDE BASE RISER SECTION WITH INTEGRAL FLOORS, UNLESS SHOWN OTHERWISE. PROVIDE ADJUSTMENT RINGS WHICH ARE STANDARD COMPONENTS OF THE MANUFACTURER OF THE MANHOLE SECTIONS.
   B. PROVIDE BARRELS CONSTRUCTED FROM 48–INCH–DIAMETER STANDARD REINFORCED CONCRETE MANHOLE SECTIONS UNLESS OTHERWISE INDICATED ON DRAWINGS. BASE SECTION SHALL HAVE A MINIMUM THICKNESS OF 12 INCHES UNDER THE INVERT.
   C. PROVIDE CONE TOPS TO RECEIVE CAST IRON FRAMES AND COVERS DESIGNED TO SUPPORT AN H–20 LOADING, UNLESS INDICATED OTHERWISE.
   D. WHERE THE DRAWINGS INDICATE THAT MANHOLES LARGER THAN 48–INCH DIAMETER ARE REQUIRED, PRECAST BASE SECTIONS OF THE REQUIRED DIAMETER SHALL BE PROVIDED WITH FLAT SLAB TOP PRECAST SECTIONS USED TO TRANSITION TO 48–INCH DIAMETER MANHOLE ACCESS RISER SECTIONS. TRANSITION CAN BE CONCENTRIC OR ECCENTRIC. THE TRANSITION SHALL BE LOCATED TO PROVIDE A MINIMUM OF 7–FOOT HEAD CLEARANCE FROM THE TOP OF BENCH TO UNDERSIDE OF TRANSITION.

4. PRECAST INLETS, HEADWALLS, AND WINGWALLS

   A. CONCRETE: PROVIDE CONCRETE FOR PRECAST MACHINE–MADE UNITS MEETING REQUIREMENTS OF ASTM C–76 REGARDING REINFORCED CONCRETE, CEMENT, AGGREGATE, MIXTURE, AND CONCRETE TEST. MINIMUM 28–DAY COMPRESSIVE STRENGTH SHALL BE 4,000 PSI.
   B. REINFORCING STEEL: PLACE REINFORCING STEEL TO CONFORM TO DETAILS SHOWN ON DRAWINGS AND SHALL PROVIDE A POSITIVE MEANS FOR HOLDING STEEL CAGES IN PLACE THROUGHOUT PRODUCTION OF CONCRETE UNITS. THE MAXIMUM VARIATION IN REINFORCEMENT POSITION IS PLUS OR MINUS 10 PERCENT OF WALL THICKNESS OR PLUS OR MINUS 1/2 INCH, WHICHEVER IS LESS. REGARDLESS OF VARIATION, THE MINIMUM COVER OF CONCRETE OVER REINFORCEMENT AS SHOWN ON THE DRAWINGS SHALL BE MAINTAINED. WELDING OF REINFORCING STEEL IS NOT PERMITTED UNLESS NOTED ON THE DRAWINGS.
   C. MORTAR: CONFORM TO REQUIREMENTS OF ASTM C 270 TYPE S USING PORTLAND CEMENT.
   D. MISCELLANEOUS METAL: SEE CASTINGS

5. CASTINGS

   A. CASTINGS FOR FRAMES, GRATES, RINGS AND COVERS SHALL CONFORM TO ASTM A–48, CLASS 30. PROVIDE LOCKING COVERS IF INDICATED ON DRAWINGS.
   B. CASTINGS SHALL BE CAPABLE OF WITHSTANDING THE APPLICATION OF AN AASHTO H–20 LOADING WITHOUT PERMANENT DEFORMATION.
   C. FABRICATE CASTINGS TO CONFORM TO THE SHAPES, DIMENSIONS, AND WITH WORDING OR LOGOS SHOWN ON THE DRAWINGS AS REQUIRED BY LOCAL MUNICIPALITY. STANDARD DIMENSIONS FOR MANHOLE COVERS ARE 32 INCHES IN DIAMETER.
   D. CASTINGS SHALL BE CLEAN, FREE FROM BLOWHOLES AND OTHER SURFACE IMPERFECTIONS. CAST HOLES IN COVERS SHALL BE CLEAN AND SYMMETRICAL, FREE OF PLUGS.

6. SPECIAL FRAMES AND COVERS

   A. WHERE INDICATED ON THE DRAWINGS, PROVIDE WATERTIGHT MANHOLE FRAMES AND COVERS WITH A MINIMUM OF FOUR BOLTS AND A GASKET DESIGNED TO SEAL COVER TO FRAME. SUPPLY WATERTIGHT MANHOLE COVERS AND FRAMES, PAMREX RE80 R8 FD OR APPROVAL EQUAL.

7. PRODUCT DELIVERY, STORAGE AND HANDLING

   A. COMPLY WITH MANUFACTURER'S RECOMMENDATIONS.
   B. HANDLE PIPE, FITTINGS, AND ACCESSORIES CAREFULLY WITH APPROVED HANDLING DEVICES. DO NOT DROP OR ROLL PIPE OFF TRUCKS OR TRAILERS. MATERIALS CRACKED, GOUGED, CHIPPED, DENTED, OR OTHERWISE DAMAGED WILL NOT BE APPROVED FOR INSTALLATION.
   C. STORE PIPE AND FITTINGS ON HEAVY TIMBERS OR PLATFORMS TO AVOID CONTACT WITH THE GROUND.
   D. UNLOAD PIPE, FITTINGS, AND SPECIALS AS CLOSE AS PRACTICAL TO THE LOCATION OF INSTALLATION TO AVOID UNNECESSARY HANDLING.
   E. KEEP INTERIORS OF PIPE AND FITTINGS COMPLETELY FREE OF DIRT AND FOREIGN MATTER.

8. BEDDING, BACKFILL, AND TOPSOIL MATERIAL:

   A. (BEDDING AND BACKFILL SHALL CONFORM TO CITY IPB FOR BEDDING AND BACKFILL OF UTILITIES) BEDDING SHALL BE CEMENT STABILIZED SAND (1–1/2 SACK/TON).
   B. BACKFILL SHALL BE CEMENT STABILIZED SAND (1–1/2 SACK/TON) WHEN EXCAVATION IS A DISTANCE OF 5 FEET OR LESS FROM EDGE OF PAVEMENT.
   C. FOR EXCAVATIONS GREATER THAN 5 FEET, NATIVE MATERIAL SHALL BE USED. TOPSOIL SHALL BE NATIVE MATERIAL UNLESS OTHERWISE SPECIFIED.
   D. STORM SEWER UNDER OR WITHIN ONE FOOT OF PROPOSED PAVEMENT SHALL BE BACK FILLED WITH CEMENT STABILIZED SAND.

9. PIPE INSTALLATION

   A. INSTALL IN ACCORDANCE WITH THE PIPE MANUFACTURER'S RECOMMENDATIONS AND AS SPECIFIED IN THIS SECTION.
   B. INSTALL PIPE ONLY AFTER EXCAVATION IS COMPLETED, THE BOTTOM OF THE TRENCH SHAPED, BEDDING MATERIAL IS INSTALLED, AND THE TRENCH HAS BEEN APPROVED BY THE ENGINEER.
   C. INSTALL PIPE TO THE LINE AND GRADE INDICATED. PLACE PIPE SO THAT IT HAS CONTINUOUS BEARING OF BARREL ON BEDDING MATERIAL AND IS LAID IN THE TRENCH SO THE INTERIOR SURFACES OF THE PIPE FOLLOW THE GRADES AND ALIGNMENTS INDICATED.
   D. INSTALL PIPE WITH THE SPIGOT ENDS TOWARD THE DIRECTION OF FLOW.
   E. FORM A CONCENTRIC JOINT WITH EACH SECTION OF ADJOINING PIPE SO AS TO PREVENT OFFSETS.
   F. KEEP THE INTERIOR OF PIPE CLEAN AS THE INSTALLATION PROGRESSES. WHERE CLEANING AFTER LAYING THE PIPE IS DIFFICULT BECAUSE OF SMALL PIPE SIZE, USE A SUITABLE SWAB OR DRAG IN THE PIPE AND PULL IT FORWARD PAST EACH JOINT IMMEDIATELY AFTER THE JOINT HAS BEEN COMPLETED.
   G. KEEP EXCAVATIONS FREE OF WATER DURING CONSTRUCTION AND UNTIL FINAL INSPECTION.
   H. WHEN WORK IS NOT IN PROGRESS, COVER THE EXPOSED ENDS OF PIPES WITH AN APPROVED PLUG TO PREVENT FOREIGN MATERIAL FROM ENTERING THE PIPE.

10. PIPE INSTALLATION OTHER THAN OPEN CUT

   A. ALL JOINTS FOR PIPE IN THE HOLE SHALL BE MADE UP PRIOR TO THE PIPE ENTERING THE BORE.
   B. BORED HOLE FOR ROAD CROSSING SHALL UTILIZE WATER ONLY FOR LUBRICATION. USE 2–INCH PILOT HOLE FOR ALIGNMENT AND GRADE. FOLLOW WITH MACHINE BORE OR MANDREL OF THE SIZE REQUIRED.
   C. BORED HOLE SHALL NOT BE MORE THAN 1–INCH GREATER THAN OUTSIDE DIAMETER OF THE PIPE BELL.
   D. ALL JOINTS FOR PIPE IN THE HOLE SHALL BE MADE UP PRIOR TO THE PIPE ENTERING THE BORE.
   E. CASING: STEEL CASING PIPE SHALL CONFORM TO ASTM A–53, STANDARD WALL THICKNESS, UNLESS OTHERWISE SHOWN ON DRAWINGS. JOINTS SHALL BE WELDED.

11. PIPE LEAKAGE TEST: VISUALLY INSPECT STORM SEWERS AND MANHOLES.

12. THE TOTAL FOOTAGE OF LINE SHALL BE INSPECTED WITH TELEVISION EQUIPMENT IN ACCORDANCE WITH THE CITY GENERAL DESIGN AND CONSTRUCTION STANDARDS AS CURRENTLY AMENDED.

13. BACKFILL AND SITE CLEANUP

   A. BACKFILL THE TRENCH ONLY AFTER PIPE INSTALLATION IS APPROVED BY THE CITY ENGINEER.
   B. IN UNPAVED AREAS, GRADE SURFACE AS A UNIFORM SLOPE TO NATURAL GRADE AS INDICATED ON THE DRAWINGS. PROVIDE A MINIMUM OF 4 INCHES OF TOPSOIL AND SEED ACCORDING FOR HYDROMULCH SEEDING. (SUBMIT SEEDING FOR APPROVAL).

GALVESTON COUNTY
BEACH PAVILION
CRYSTAL BEACH, TX 77650
BE–Arc LLC Project No : C–13–007.01

SHELMARK ENGINEERING, L.L.C.
CIVIL | MARINE | PLANNING | STRUCTURAL
921 FM 517 ROAD EAST | DICKINSON, TEXAS 77539
TX FIRM NO. F-2115

eas easterwood ARCHITECTS STUDIO
409-354-8976
EASTERWOOD@BE-ARC.COM
2328 BALL STREET
GALVESTON TEXAS 77550

DATE	REVISION

STATE OF TEXAS
MARCUS J. MICHNA
84739
LICENSED
PROFESSIONAL ENGINEER
8-24-18

BID SET

DATE ISSUED: 08/24/2018

COPYRIGHT 2018

C0.1

GENERAL NOTES

GENERAL NOTES:

1. REFERENCE LINES AND GRADES

A. THE OWNER SHALL PROVIDE REFERENCES FOR LINE AND GRADE. IT SHALL BE THE CONTRACTOR'S RESPONSIBILITY TO MAINTAIN THE REFERENCE POINTS AND REPLACE THEM IF LOST OR DAMAGED.

2. EXISTING UTILITIES

A. VERIFY LOCATION AND ELEVATION OF EXISTING FACILITIES PRIOR TO CONSTRUCTION OF PROPOSED FACILITIES.
B. PROTECT ALL EXISTING UTILITIES DURING CONSTRUCTION.
C. THE TYPE, SIZE, LOCATION AND OWNERSHIP OF EXISTING UTILITIES HAVE BEEN OBTAINED FROM RECORD DRAWINGS FURNISHED BY THE OWNER. INFORMATION DERIVED FROM THESE SOURCES IS BELIEVED TO BE THE MOST RELIABLE AVAILABLE AND IS PROVIDED FOR THE CONTRACTOR'S INFORMATION ONLY. THE CONTRACTOR SHALL NOTIFY EACH PIPELINE OWNER AND VERIFY ITS ACTUAL FIELD LOCATION PRIOR TO EXCAVATION. NO WARRANTY IS GIVEN AS TO THE ACCURACY OR COMPLETENESS OF UTILITY LOCATION SHOWN ON THESE DRAWINGS.
D. AT LEAST 30 DAYS PRIOR TO COMMENCING ANY EXCAVATING OR OTHER CONSTRUCTION ACTIVITY IN THE VICINITY OF THE UTILITY, NOTIFY THE TEXAS EXCAVATION SAFETY SYSTEM AT 1-800-DIG-TESS (344-8377).
E. NO EXCAVATING OR OTHER CONSTRUCTION ACTIVITY SHALL BE CONDUCTED IN THE IMMEDIATE VICINITY OF A PIPELINE IN THE ABSENCE OF A PIPELINE REPRESENTATIVE. THE CONTRACTOR SHALL DETERMINE THE EXACT LOCATION BEFORE COMMENCING WORK, AND SHALL BE RESPONSIBLE FOR ANY DAMAGES CAUSED BY HIS FAILURE TO EXACTLY LOCATE AND PRESERVE THESE UNDERGROUND FACILITIES.

F. OVERHEAD LINES MAY EXIST ON THE PROPERTY. THEY HAVE NOT BEEN MARKED SINCE THEY ARE CLEARLY VISIBLE. THE CONTRACTOR SHALL LOCATE THEM PRIOR TO BEGINNING ANY CONSTRUCTION. TEXAS LAW, SECTION 752, HEALTH AND SAFETY CODE, FORBIDS ALL ACTIVITIES IN WHICH PERSONS OR THINGS MAY COME WITHIN 6 FEET OF LIVE OVERHEAD HIGH VOLTAGE LINES. CONTRACTORS AND OWNERS ARE LEGALLY RESPONSIBLE FOR THE SAFETY OF CONSTRUCTION WORKERS UNDER THIS LAW. THIS LAW CARRIES BOTH CRIMINAL AND CIVIL LIABILITY.

3. EXISTING CONDITIONS:

A. EXCESS EXCAVATED MATERIAL SHALL BE DISPOSED OF AS DIRECTED BY THE OWNER OR AS SPECIFIED ON THE DRAWINGS. SOIL SHALL NOT BE DEPOSITED GREATER THAN 4" DEEP WITHOUT PERMISSION FROM THE OWNER.

4. PERMITS:

A. OWNER TO OBTAIN ALL PERMITS REQUIRED BY CITY, COUNTY, AND STATE AGENCIES PRIOR TO STARTING CONSTRUCTION OF UTILITY AND/OR CULVERTS WITHIN ROAD RIGHT-OF-WAYS.
B. CONTRACTOR SHALL ASSURE HIMSELF THAT ALL CONSTRUCTION PERMITS HAVE BEEN OBTAINED PRIOR TO COMMENCEMENT OF WORK. REQUIRED PERMITS THAT CAN ONLY BE ISSUED TO CONTRACTOR SHALL BE OBTAINED AT HIS EXPENSE.

5. SAFETY:

A. OBSERVE ALL FEDERAL, STATE, AND LOCAL SAFETY REGULATIONS WHEN WORKING IN OR NEAR PUBLIC ROAD RIGHT-OF-WAYS.
B. CONTRACTOR SHALL COMPLY WITH OSHA REGULATIONS AND STATE OF TEXAS LAWS CONCERNING EXCAVATION, TRENCHING, AND SHORING.

THE AREA OF THIS SURVEY IS IN FIRM 485470 0124E MAP REVISED JULY 5, 1993, ZONE A15 BFE 15.

SURVEYOR NOTES:
1) THIS PROPERTY DOES LIE WITHIN THE 100 YEAR FLOOD PLAIN AS ESTABLISHED BY THE FEDERAL EMERGENCY MANAGEMENT AGENCY.
2) THIS PROPERTY IS SUBJECT TO ANY RESTRICTIONS OF RECORD AND MAY BE SUBJECT TO SETBACKS FROM POWER LINES AS ESTABLISHED BY OSHA (CALL YOUR POWER COMPANY).
3) GRID BEARINGS BASED ON MONUMENTATION OF WEST R.O.W. LINE OF NOBLE CARL DRIVE.
4) ELEVATIONS ARE SHOWN IN FEET ABOVE MEAN SEA LEVEL NAVD '88 DATUM AS TIED TO NGS MONUMENT HGCSD 64.
5) SURVEYED WITHOUT BENEFIT OF A TITLE REPORT.

LEGEND

B-1 SOIL BORINGS

NO CONSTRUCTION WORKERS SHALL PARK VEHICLES TO BLOCK FIRE STATION/EMS INGRESS/EGRESS

COUNTY APPROVAL:
SIGNATURE _____ DATE_____

60 0 60 120 180 Feet
SCALE: 1"=60'

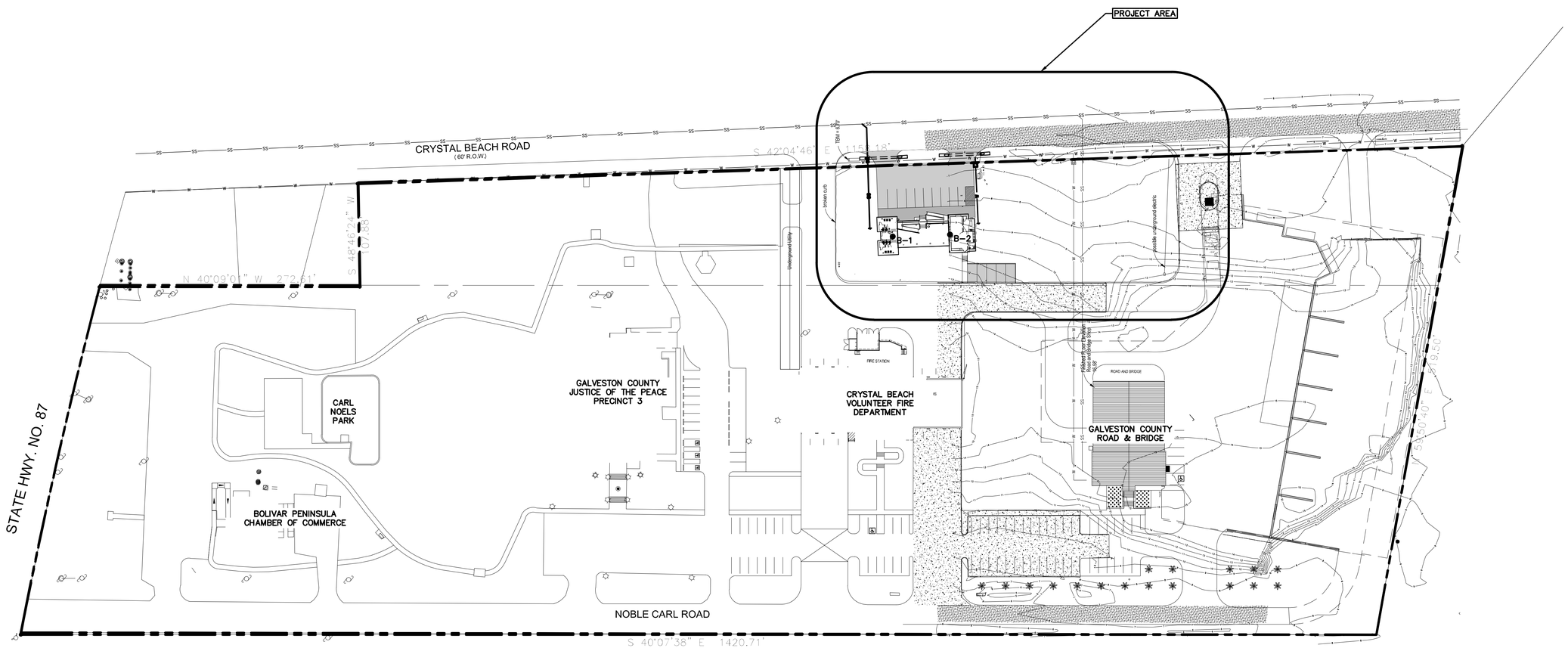

GALVESTON COUNTY
BEACH PAVILION
CRYSTAL BEACH, TX 77650

BE-Arc LLC Project No : C-13-007.01

SHELMARK ENGINEERING, L.L.C.
CIVIL | MARINE | PLANNING | INFRASTRUCTURE
920 FM 517 ROAD EAST | DICKINSON, TEXAS 77539
TX FIRM NO. F-2121

eas easterwood ARCHITECTS STUDIO
2328 BALL STREET
GALVESTON TEXAS 77550
409-354-8976
EASTERWOOD@BE-ARC.COM

DATE	REVISION

STATE OF TEXAS
MARCUS J. MICHNA
84739
LICENSED
PROFESSIONAL ENGINEER
8-24-18

BID SET

DATE ISSUED: 08/24/2018

COPYRIGHT 2018

C1.1

SITE PLAN

GENERAL NOTES:

1. REFERENCE LINES AND GRADES

A. THE OWNER SHALL PROVIDE REFERENCES FOR LINE AND GRADE. IT SHALL BE THE CONTRACTOR'S RESPONSIBILITY TO MAINTAIN THE REFERENCE POINTS AND REPLACE THEM IF LOST OR DAMAGED.

2. EXISTING UTILITIES

A. VERIFY LOCATION AND ELEVATION OF EXISTING FACILITIES PRIOR TO CONSTRUCTION OF PROPOSED FACILITIES.
B. PROTECT ALL EXISTING UTILITIES DURING CONSTRUCTION.
C. THE TYPE, SIZE, LOCATION AND OWNERSHIP OF EXISTING UTILITIES HAVE BEEN OBTAINED FROM RECORD DRAWINGS FURNISHED BY THE OWNER. INFORMATION DERIVED FROM THESE SOURCES IS BELIEVED TO BE THE MOST RELIABLE AVAILABLE AND IS PROVIDED FOR THE CONTRACTOR'S INFORMATION ONLY. THE CONTRACTOR SHALL NOTIFY EACH PIPELINE OWNER AND VERIFY ITS ACTUAL FIELD LOCATION PRIOR TO EXCAVATION. NO WARRANTY IS GIVEN AS TO THE ACCURACY OR COMPLETENESS OF UTILITY LOCATION SHOWN ON THESE DRAWINGS.
D. AT LEAST 30 DAYS PRIOR TO COMMENCING ANY EXCAVATING OR OTHER CONSTRUCTION ACTIVITY IN THE VICINITY OF THE UTILITY, NOTIFY THE TEXAS EXCAVATION SAFETY SYSTEM AT 1-800-DIG-TESS (344-8377).
E. NO EXCAVATING OR OTHER CONSTRUCTION ACTIVITY SHALL BE CONDUCTED IN THE IMMEDIATE VICINITY OF A PIPELINE IN THE ABSENCE OF A PIPELINE REPRESENTATIVE. THE CONTRACTOR SHALL DETERMINE THE EXACT LOCATION BEFORE COMMENCING WORK, AND SHALL BE RESPONSIBLE FOR ANY DAMAGES CAUSED BY HIS FAILURE TO EXACTLY LOCATE AND PRESERVE THESE UNDERGROUND FACILITIES.

F. OVERHEAD LINES MAY EXIST ON THE PROPERTY. THEY HAVE NOT BEEN MARKED SINCE THEY ARE CLEARLY VISIBLE. THE CONTRACTOR SHALL LOCATE THEM PRIOR TO BEGINNING ANY CONSTRUCTION. TEXAS LAW, SECTION 752, HEALTH AND SAFETY CODE, FORBIDS ALL ACTIVITIES IN WHICH PERSONS OR THINGS MAY COME WITHIN 6 FEET OF LIVE OVERHEAD HIGH VOLTAGE LINES. CONTRACTORS AND OWNERS ARE LEGALLY RESPONSIBLE FOR THE SAFETY OF CONSTRUCTION WORKERS UNDER THIS LAW. THIS LAW CARRIES BOTH CRIMINAL AND CIVIL LIABILITY.

3. EXISTING CONDITIONS:

A. EXCESS EXCAVATED MATERIAL SHALL BE DISPOSED OF AS DIRECTED BY THE OWNER OR AS SPECIFIED ON THE DRAWINGS. SOIL SHALL NOT BE DEPOSITED GREATER THAN 4" DEEP WITHOUT PERMISSION FROM THE OWNER.

4. PERMITS:

A. OWNER TO OBTAIN ALL PERMITS REQUIRED BY CITY, COUNTY, AND STATE AGENCIES PRIOR TO STARTING CONSTRUCTION OF UTILITY AND/OR CULVERTS WITHIN ROAD RIGHT-OF-WAYS.
B. CONTRACTOR SHALL ASSURE HIMSELF THAT ALL CONSTRUCTION PERMITS HAVE BEEN OBTAINED PRIOR TO COMMENCEMENT OF WORK. REQUIRED PERMITS THAT CAN ONLY BE ISSUED TO CONTRACTOR SHALL BE OBTAINED AT HIS EXPENSE.

5. SAFETY:

A. OBSERVE ALL FEDERAL, STATE, AND LOCAL SAFETY REGULATIONS WHEN WORKING IN OR NEAR PUBLIC ROAD RIGHT-OF-WAYS.
B. CONTRACTOR SHALL COMPLY WITH OSHA REGULATIONS AND STATE OF TEXAS LAWS CONCERNING EXCAVATION, TRENCHING, AND SHORING.

THE AREA OF THIS SURVEY IS IN FIRM 485470 0124E MAP REVISED JULY 5, 1993, ZONE A15 BFE 15.

SURVEYOR NOTES:
1) THIS PROPERTY DOES LIE WITHIN THE 100 YEAR FLOOD PLAIN AS ESTABLISHED BY THE FEDERAL EMERGENCY MANAGEMENT AGENCY.
2) THIS PROPERTY IS SUBJECT TO ANY RESTRICTIONS OF RECORD AND MAY BE SUBJECT TO SETBACKS FROM POWER LINES AS ESTABLISHED BY OSHA (CALL YOUR POWER COMPANY).
3) GRID BEARINGS BASED ON MONUMENTATION OF WEST R.O.W. LINE OF NOBLE CARL DRIVE.
4) ELEVATIONS ARE SHOWN IN FEET ABOVE MEAN SEA LEVEL NAVD '88 DATUM AS TIED TO NGS MONUMENT HGCSD 64.
5) SURVEYED WITHOUT BENEFIT OF A TITLE REPORT.

WATER & SANITARY SEWER PLAN LEGEND

M	PROPOSED WATER METER BOX
—SS—	EXISTING SANITARY SEWER LINE
	PROPOSED SANITARY SEWER LINE
—W—	EXISTING WATER LINE
	PROPOSED WATER LINE

NOTES:
1) COORDINATE PERMITS & PAYMENT OF SANITARY SEWER GRINDER PUMP & FORCE MAIN EXTENSION WITH BOLIVAR UTILITIES SERVICES (B.U.S.) AT 409-684-9941.
2) COORDINATE WATER METER INSTALLATION & FEES WITH BOLIVAR PENINSULA SPECIAL UTILITY DISTRICT (BPSUD) AT 409-684-3515.
3) ENDS OF CONDUITS FOR FUTURE UTILITIES SHALL BE TEMPORARY PLUGGED AND MARKED WITH 2x4 STAKES U.O.N.

COUNTY APPROVAL:
SIGNATURE _____ DATE _____

20 0 20 40 60 Feet
SCALE: 1"=20'

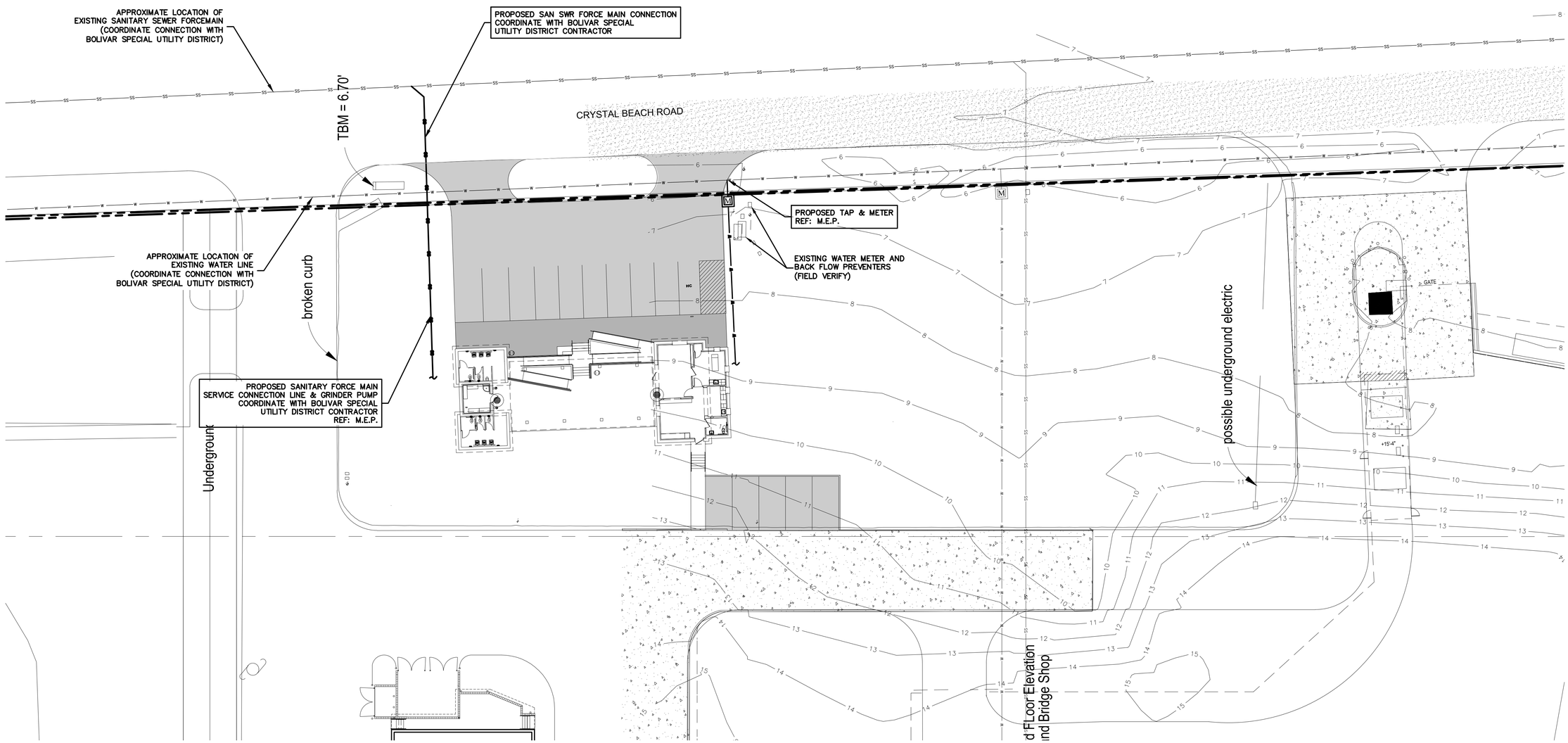

GALVESTON COUNTY
BEACH PAVILION
CRYSTAL BEACH, TX 77650

BE-Arc LLC Project No : C-13-007.01

SHELMARK ENGINEERING, L.L.C.
CIVIL | MARINE | PLANNING | INFRASTRUCTURE
920 FM 517 ROAD EAST | DICKINSON, TEXAS 77539
TX FIRM NO. F-2124

easterwood ARCHITECTS STUDIO
2328 BALL STREET
GALVESTON TEXAS 77550
409-354-8976
EASTERWOOD@BE-ARC.COM

DATE	REVISION

STATE OF TEXAS
MARCUS J. MICHNA
84739
LICENSED PROFESSIONAL ENGINEER
8-24-18

BID SET

DATE ISSUED: 08/24/2018

COPYRIGHT 2018

C1.2

WATER & SANITARY PLAN

GENERAL NOTES:

1. REFERENCE LINES AND GRADES

A. THE OWNER SHALL PROVIDE REFERENCES FOR LINE AND GRADE. IT SHALL BE THE CONTRACTOR'S RESPONSIBILITY TO MAINTAIN THE REFERENCE POINTS AND REPLACE THEM IF LOST OR DAMAGED.

2. EXISTING UTILITIES

A. VERIFY LOCATION AND ELEVATION OF EXISTING FACILITIES PRIOR TO CONSTRUCTION OF PROPOSED FACILITIES.
B. PROTECT ALL EXISTING UTILITIES DURING CONSTRUCTION.
C. THE TYPE, SIZE, LOCATION AND OWNERSHIP OF EXISTING UTILITIES HAVE BEEN OBTAINED FROM RECORD DRAWINGS FURNISHED BY THE OWNER. INFORMATION DERIVED FROM THESE SOURCES IS BELIEVED TO BE THE MOST RELIABLE AVAILABLE AND IS PROVIDED FOR THE CONTRACTOR'S INFORMATION ONLY. THE CONTRACTOR SHALL NOTIFY EACH PIPELINE OWNER AND VERIFY ITS ACTUAL FIELD LOCATION PRIOR TO EXCAVATION. NO WARRANTY IS GIVEN AS TO THE ACCURACY OR COMPLETENESS OF UTILITY LOCATION SHOWN ON THESE DRAWINGS.
D. AT LEAST 30 DAYS PRIOR TO COMMENCING ANY EXCAVATING OR OTHER CONSTRUCTION ACTIVITY IN THE VICINITY OF THE UTILITY, NOTIFY THE TEXAS EXCAVATION SAFETY SYSTEM AT 1-800-DIG-TESS (344-8377).
E. NO EXCAVATING OR OTHER CONSTRUCTION ACTIVITY SHALL BE CONDUCTED IN THE IMMEDIATE VICINITY OF A PIPELINE IN THE ABSENCE OF A PIPELINE REPRESENTATIVE. THE CONTRACTOR SHALL DETERMINE THE EXACT LOCATION BEFORE COMMENCING WORK, AND SHALL BE RESPONSIBLE FOR ANY DAMAGES CAUSED BY HIS FAILURE TO EXACTLY LOCATE AND PRESERVE THESE UNDERGROUND FACILITIES.

F. OVERHEAD LINES MAY EXIST ON THE PROPERTY. THEY HAVE NOT BEEN MARKED SINCE THEY ARE CLEARLY VISIBLE. THE CONTRACTOR SHALL LOCATE THEM PRIOR TO BEGINNING ANY CONSTRUCTION. TEXAS LAW, SECTION 752, HEALTH AND SAFETY CODE, FORBIDS ALL ACTIVITIES IN WHICH PERSONS OR THINGS MAY COME WITHIN 6 FEET OF LIVE OVERHEAD HIGH VOLTAGE LINES. CONTRACTORS AND OWNERS ARE LEGALLY RESPONSIBLE FOR THE SAFETY OF CONSTRUCTION WORKERS UNDER THIS LAW. THIS LAW CARRIES BOTH CRIMINAL AND CIVIL LIABILITY.

3. EXISTING CONDITIONS:

A. EXCESS EXCAVATED MATERIAL SHALL BE DISPOSED OF AS DIRECTED BY THE OWNER OR AS SPECIFIED ON THE DRAWINGS. SOIL SHALL NOT BE DEPOSITED GREATER THAN 4" DEEP WITHOUT PERMISSION FROM THE OWNER.

4. PERMITS:

A. OWNER TO OBTAIN ALL PERMITS REQUIRED BY CITY, COUNTY, AND STATE AGENCIES PRIOR TO STARTING CONSTRUCTION OF UTILITY AND/OR CULVERTS WITHIN ROAD RIGHT-OF-WAYS.
B. CONTRACTOR SHALL ASSURE HIMSELF THAT ALL CONSTRUCTION PERMITS HAVE BEEN OBTAINED PRIOR TO COMMENCEMENT OF WORK. REQUIRED PERMITS THAT CAN ONLY BE ISSUED TO CONTRACTOR SHALL BE OBTAINED AT HIS EXPENSE.

5. SAFETY:

A. OBSERVE ALL FEDERAL, STATE, AND LOCAL SAFETY REGULATIONS WHEN WORKING IN OR NEAR PUBLIC ROAD RIGHT-OF-WAYS.
B. CONTRACTOR SHALL COMPLY WITH OSHA REGULATIONS AND STATE OF TEXAS LAWS CONCERNING EXCAVATION, TRENCHING, AND SHORING.

THE AREA OF THIS SURVEY IS IN FIRM 485470 0124E MAP REVISED JULY 5, 1993, ZONE A15 BFE 15.

SURVEYOR NOTES:
1) THIS PROPERTY DOES LIE WITHIN THE 100 YEAR FLOOD PLAIN AS ESTABLISHED BY THE FEDERAL EMERGENCY MANAGEMENT AGENCY.
2) THIS PROPERTY IS SUBJECT TO ANY RESTRICTIONS OF RECORD AND MAY BE SUBJECT TO SETBACKS FROM POWER LINES AS ESTABLISHED BY OSHA (CALL YOUR POWER COMPANY).
3) GRID BEARINGS BASED ON MONUMENTATION OF WEST R.O.W. LINE OF NOBLE CARL DRIVE.
4) ELEVATIONS ARE SHOWN IN FEET ABOVE MEAN SEA LEVEL NAVD '88 DATUM AS TIED TO NGS MONUMENT HGCSD 64.
5) SURVEYED WITHOUT BENEFIT OF A TITLE REPORT.

PAVING LEGEND

FF	FINISHED FLOOR
FG	FINISHED GRADE
TP	TOP OF PAVEMENT
TC	TOP OF CURB
TG	TOP OF GRATE
G	GUTTER
1.0%	PAVEMENT SLOPE
	PROPOSED 6" CONCRETE PAVING 748 SY
	EXISTING FLOW ARROW
	PROPOSED FLOW ARROW
6	PROPOSED CONTOURS
6	EXISTING CONTOURS

COUNTY APPROVAL:
SIGNATURE _____ DATE _____

20 0 20 40 60 Feet
SCALE: 1"=20'

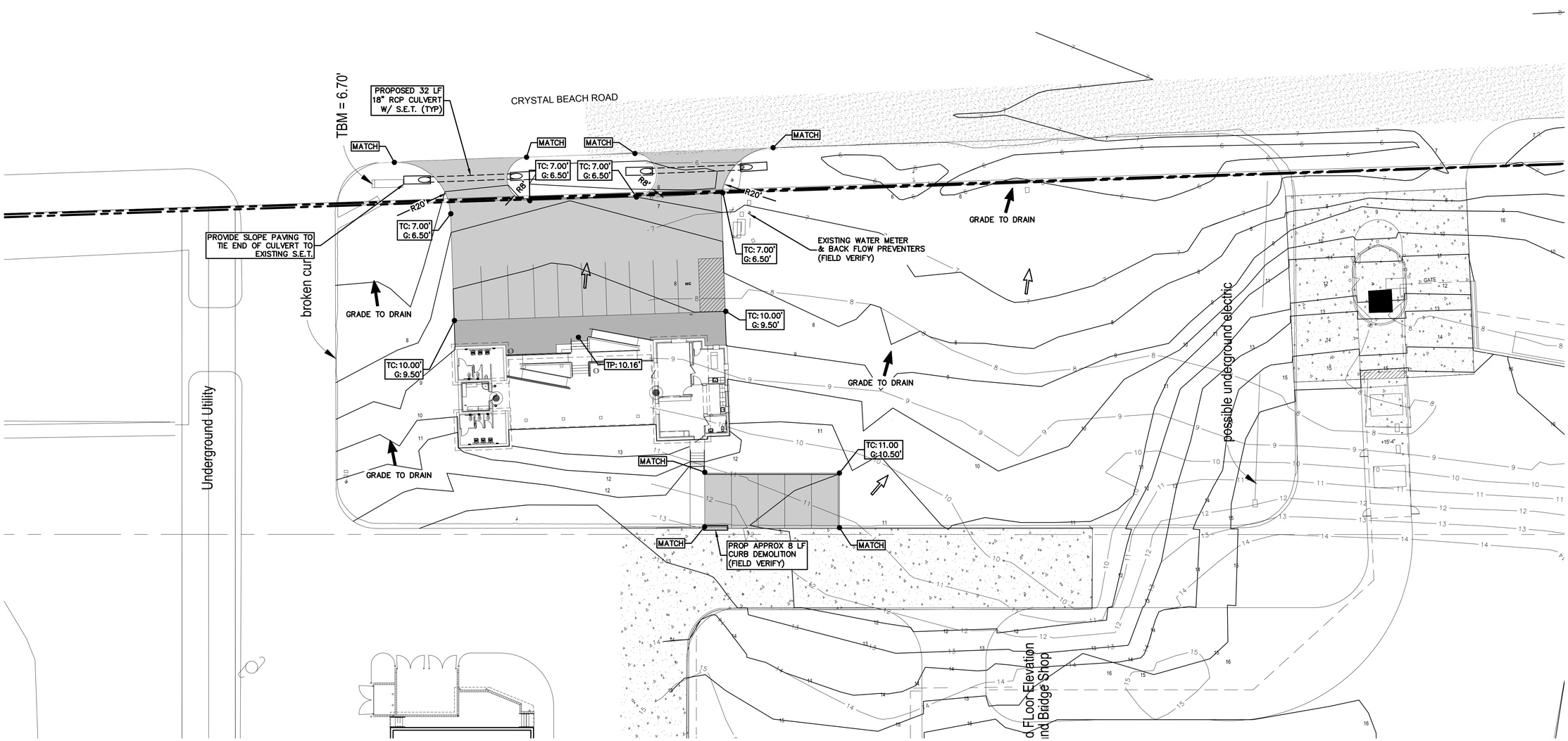

GALVESTON COUNTY
BEACH PAVILION
CRYSTAL BEACH, TX 77650

BE-Arc LLC Project No : C-13-007.01

SHELMARK ENGINEERING, L.L.C.
CIVIL | MARINE | PLANNING | INFRASTRUCTURE
920 FM 517 ROAD EAST | DICKINSON, TEXAS 77539
TX FIRM NO. F-2135

easterwood ARCHITECTS STUDIO
2328 BALL STREET
GALVESTON TEXAS 77550
409-354-8976
EASTERWOOD@BE-ARC.COM

DATE	REVISION

STATE OF TEXAS
MARCUS J. MICHNA
84739
LICENSED PROFESSIONAL ENGINEER
8-24-18

BID SET

DATE ISSUED: 08/24/2018

COPYRIGHT 2018

c1.3

PAVING & DRAINAGE PLAN

GENERAL NOTES:

1. REFERENCE LINES AND GRADES

A. THE OWNER SHALL PROVIDE REFERENCES FOR LINE AND GRADE. IT SHALL BE THE CONTRACTOR'S RESPONSIBILITY TO MAINTAIN THE REFERENCE POINTS AND REPLACE THEM IF LOST OR DAMAGED.

2. EXISTING UTILITIES

A. VERIFY LOCATION AND ELEVATION OF EXISTING FACILITIES PRIOR TO CONSTRUCTION OF PROPOSED FACILITIES.
B. PROTECT ALL EXISTING UTILITIES DURING CONSTRUCTION.
C. THE TYPE, SIZE, LOCATION AND OWNERSHIP OF EXISTING UTILITIES HAVE BEEN OBTAINED FROM RECORD DRAWINGS FURNISHED BY THE OWNER. INFORMATION DERIVED FROM THESE SOURCES IS BELIEVED TO BE THE MOST RELIABLE AVAILABLE AND IS PROVIDED FOR THE CONTRACTOR'S INFORMATION ONLY. THE CONTRACTOR SHALL NOTIFY EACH PIPELINE OWNER AND VERIFY ITS ACTUAL FIELD LOCATION PRIOR TO EXCAVATION. NO WARRANTY IS GIVEN AS TO THE ACCURACY OR COMPLETENESS OF UTILITY LOCATION SHOWN ON THESE DRAWINGS.
D. AT LEAST 30 DAYS PRIOR TO COMMENCING ANY EXCAVATING OR OTHER CONSTRUCTION ACTIVITY IN THE VICINITY OF THE UTILITY, NOTIFY THE TEXAS EXCAVATION SAFETY SYSTEM AT 1-800-DIG-TESS (344-8377).
E. NO EXCAVATING OR OTHER CONSTRUCTION ACTIVITY SHALL BE CONDUCTED IN THE IMMEDIATE VICINITY OF A PIPELINE IN THE ABSENCE OF A PIPELINE REPRESENTATIVE. THE CONTRACTOR SHALL DETERMINE THE EXACT LOCATION BEFORE COMMENCING WORK, AND SHALL BE RESPONSIBLE FOR ANY DAMAGES CAUSED BY HIS FAILURE TO EXACTLY LOCATE AND PRESERVE THESE UNDERGROUND FACILITIES.

F. OVERHEAD LINES MAY EXIST ON THE PROPERTY. THEY HAVE NOT BEEN MARKED SINCE THEY ARE CLEARLY VISIBLE. THE CONTRACTOR SHALL LOCATE THEM PRIOR TO BEGINNING ANY CONSTRUCTION. TEXAS LAW, SECTION 752, HEALTH AND SAFETY CODE, FORBIDS ALL ACTIVITIES IN WHICH PERSONS OR THINGS MAY COME WITHIN 6 FEET OF LIVE OVERHEAD HIGH VOLTAGE LINES. CONTRACTORS AND OWNERS ARE LEGALLY RESPONSIBLE FOR THE SAFETY OF CONSTRUCTION WORKERS UNDER THIS LAW. THIS LAW CARRIES BOTH CRIMINAL AND CIVIL LIABILITY.

3. EXISTING CONDITIONS:

A. EXCESS EXCAVATED MATERIAL SHALL BE DISPOSED OF AS DIRECTED BY THE OWNER OR AS SPECIFIED ON THE DRAWINGS. SOIL SHALL NOT BE DEPOSITED GREATER THAN 4" DEEP WITHOUT PERMISSION FROM THE OWNER.

4. PERMITS:

A. OWNER TO OBTAIN ALL PERMITS REQUIRED BY CITY, COUNTY, AND STATE AGENCIES PRIOR TO STARTING CONSTRUCTION OF UTILITY AND/OR CULVERTS WITHIN ROAD RIGHT-OF-WAYS.
B. CONTRACTOR SHALL ASSURE HIMSELF THAT ALL CONSTRUCTION PERMITS HAVE BEEN OBTAINED PRIOR TO COMMENCEMENT OF WORK. REQUIRED PERMITS THAT CAN ONLY BE ISSUED TO CONTRACTOR SHALL BE OBTAINED AT HIS EXPENSE.

5. SAFETY:

A. OBSERVE ALL FEDERAL, STATE, AND LOCAL SAFETY REGULATIONS WHEN WORKING IN OR NEAR PUBLIC ROAD RIGHT-OF-WAYS.
B. CONTRACTOR SHALL COMPLY WITH OSHA REGULATIONS AND STATE OF TEXAS LAWS CONCERNING EXCAVATION, TRENCHING, AND SHORING.

THE AREA OF THIS SURVEY IS IN FIRM 485470 0124E MAP REVISED JULY 5, 1993, ZONE A15 BFE 15.

SURVEYOR NOTES:
1) THIS PROPERTY DOES LIE WITHIN THE 100 YEAR FLOOD PLAIN AS ESTABLISHED BY THE FEDERAL EMERGENCY MANAGEMENT AGENCY.
2) THIS PROPERTY IS SUBJECT TO ANY RESTRICTIONS OF RECORD AND MAY BE SUBJECT TO SETBACKS FROM POWER LINES AS ESTABLISHED BY OSHA (CALL YOUR POWER COMPANY).
3) GRID BEARINGS BASED ON MONUMENTATION OF WEST R.O.W. LINE OF NOBLE CARL DRIVE.
4) ELEVATIONS ARE SHOWN IN FEET ABOVE MEAN SEA LEVEL NAVD '88 DATUM AS TIED TO NGS MONUMENT HGCSD 64.
5) SURVEYED WITHOUT BENEFIT OF A TITLE REPORT.

SWPPP LEGEND

RFB — REINFORCED FILTER FABRIC FENCE

COUNTY APPROVAL:
SIGNATURE _____ DATE _____

20 0 20 40 60 Feet
SCALE: 1"=20'

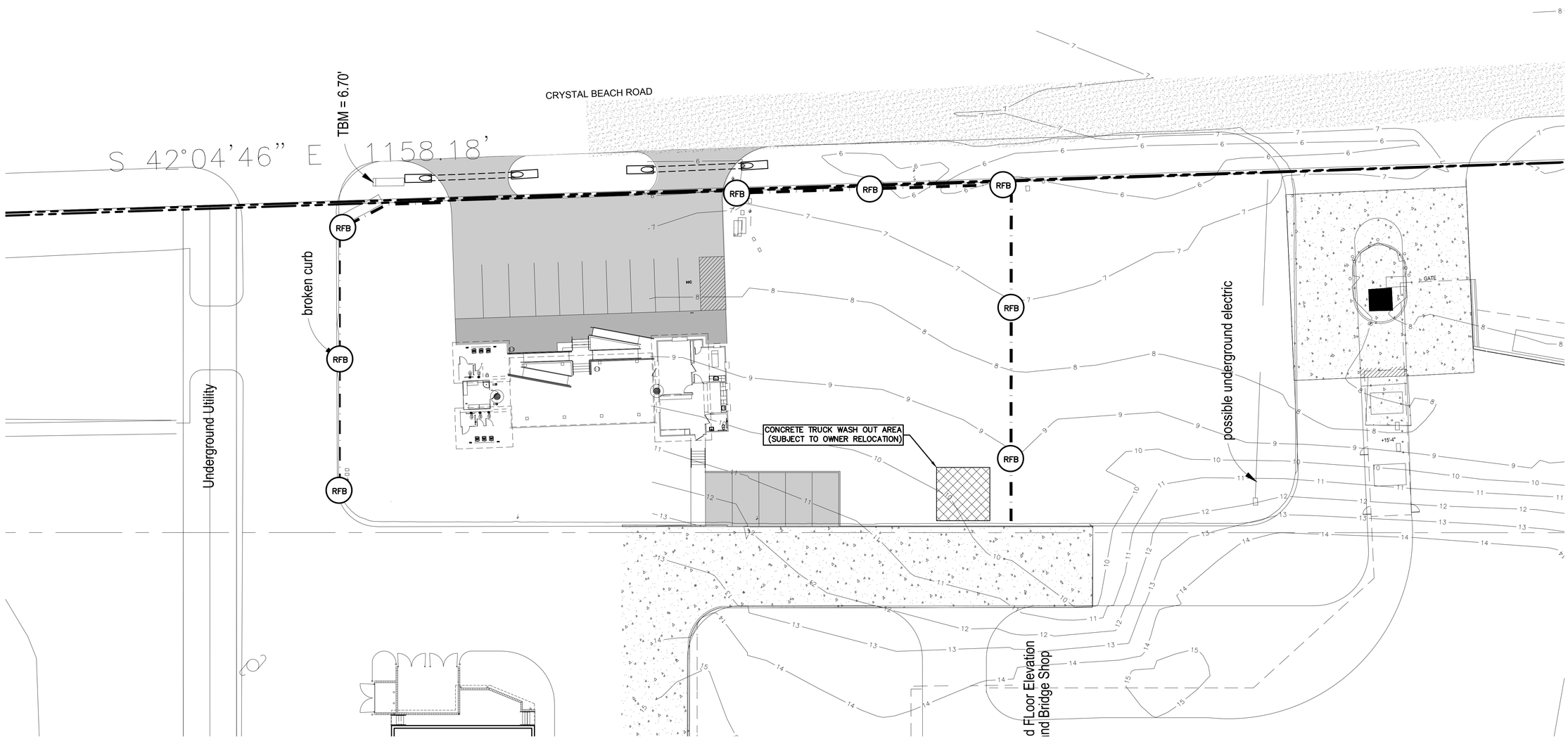

GALVESTON COUNTY
BEACH PAVILION
CRYSTAL BEACH, TX 77650

BE-Arc LLC Project No : C-13-007.01

SHELMARK ENGINEERING, L.L.C.
CIVIL | MARINE | PLANNING | INFRASTRUCTURE
920 FM 517 ROAD EAST | DICKINSON, TEXAS 77539
TX FIRM NO. F-2151

easterwood ARCHITECTS STUDIO
2328 BALL STREET
GALVESTON TEXAS 77550
409-354-8976
EASTERWOOD@BE-ARC.COM

DATE	REVISION

STATE OF TEXAS
MARCUS J. MICHNA
84739
LICENSED PROFESSIONAL ENGINEER
8-24-18

BID SET

DATE ISSUED: 08/24/2018

COPYRIGHT 2018

C1.4

SWPP PLAN

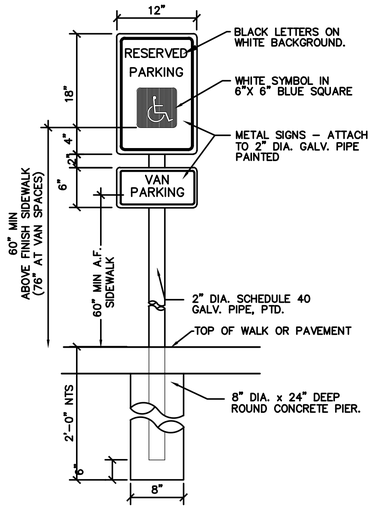

ADA SIGN (1)

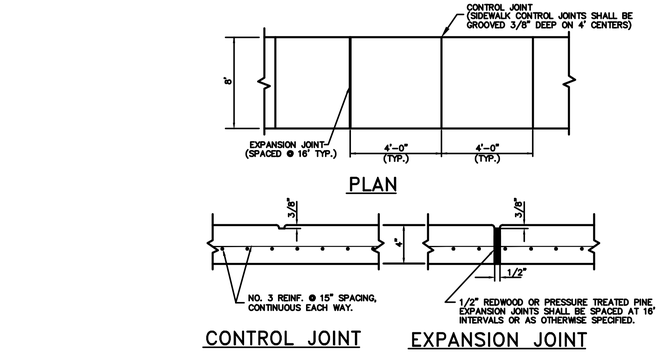

NOTES:
1. ALL EDGES SHALL BE ROUNDED WITH 3/8" RADIUS.
2. CONTROL JOINTS SHALL BE SPACED AT 4'-0" INTERVALS.
3. CONTROL JOINTS SHALL BE 3/8" DEEP AND TROWEL EDGE.
4. 1/2" EXPANSION MATERIAL REQUIRED WHERE SIDEWALKS ABUT BUILDINGS, CURBS, DRIVEWAYS, OR EXISTING SIDEWALKS.
5. EXPANSION JOINTS SHALL BE SPACED AT 16 FT. INTERVALS TYPICALLY.
6. WHERE NEW SIDEWALK IS PLACED AGAINST EXISTING SIDEWALK, SAWCUT EXISTING SIDEWALK TO AN EVEN STRAIGHT LINE PRIOR TO INSTALLATION

SIDEWALK (2)

COUNTY APPROVAL:
SIGNATURE _____ DATE_____

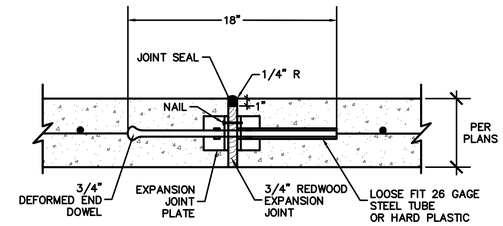

NOTE:
1. DOWELS FOR PAVEMENT EXPANSION SHALL BE 3/4" ø FOR 6" TO LESS THAN 7" PAVEMENT THICKNESS. 1" ø FOR 7" TO LESS THAN 9" PAVEMENT THICKNESS. 1 1/4 ø FOR 9" OR GREATER PAVEMENT THICKNESS.
2. EXPANSION JOINT SHALL BE PLACED AT THE END OF EACH CURB RETURN AND AT MAXIMUM 40' SPACING.
3. ALL JOINT SEAL MATERIAL SHALL BE ASPHALT RUBBER ACCORDANCE WITH ASTM DESIGNATION D3405.
4. IF DEFORMED METAL STRIPS ARE ALLOWED, THEY SHALL BE STAKED IN PLACE WITH #3 BARS.
5. PRE-MANUFACTURED JOINT PLATE.

EXPANSION JOINT (3)

NOTE:
HANDICAPPED PARKING SPACES AND ACCESS AISLES SHALL BE LEVEL WITH SURFACE SLOPES NOT EXCEEDING 1:50 (2%) IN ALL DIRECTIONS.

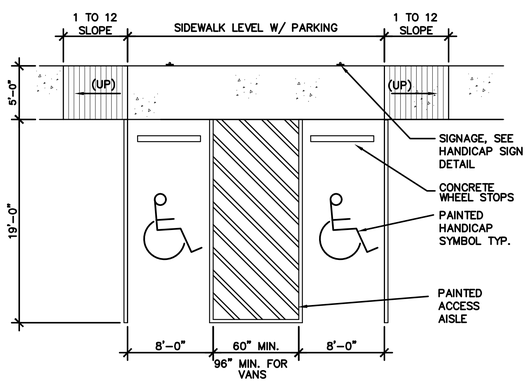

ADA PARKING SPACE (4)

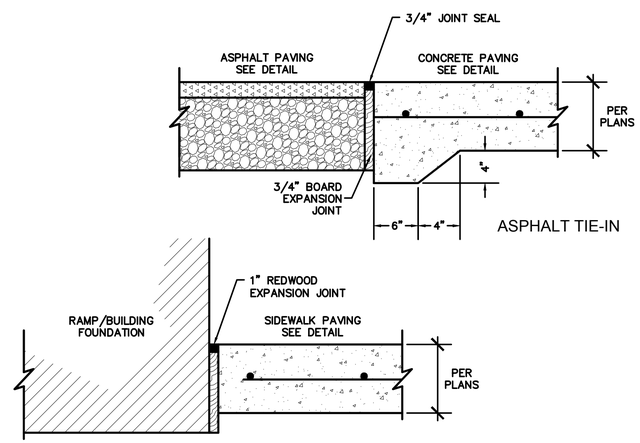

EXPANSION JOINTS (5)

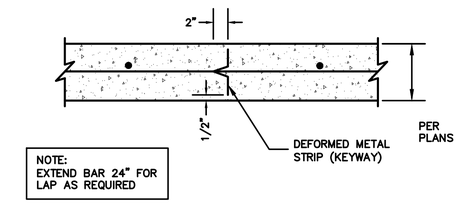

NOTE:
EXTEND BAR 24" FOR LAP AS REQUIRED

CONTROL JOINT (6)

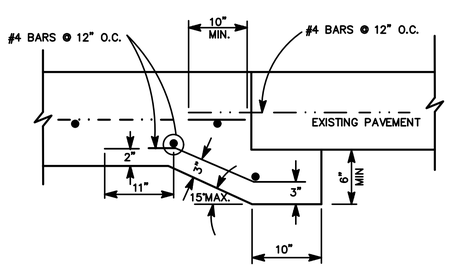

CONCRETE TIE-IN (7)

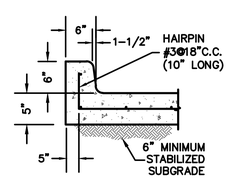

NOTES:

1. MORTAR FINISH NOT REQUIRED WHEN CURB IS POURED BY CURB MACHINE. CURB SHALL HAVE THE SAME OUTSIDE DIMENSIONS.

2. EXPANSION JOINTS SHALL BE INSTALLED AT ALL PAVEMENT EXPANSION JOINTS.

6" CURB (8)

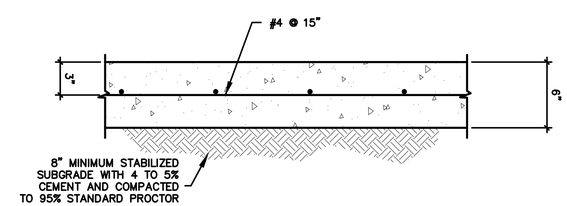

CONCRETE PAVEMENT (9)

GALVESTON COUNTY
BEACH PAVILION
CRYSTAL BEACH, TX 77650

BE-Arc LLC Project No : C-13-007.01

SHELMARK ENGINEERING, L.L.C.
CIVIL | MARINE | PLANNING | INFRASTRUCTURE
920 FM 517 ROAD EAST | DICKINSON, TEXAS 77539
TX FIRM NO. F-2124

easterwood ARCHITECTS STUDIO
2328 BALL STREET
GALVESTON TEXAS 77550
409-354-8976
EASTERWOOD@BE-ARC.COM

DATE	REVISION

STATE OF TEXAS
MARCUS J. MICHNA
84739
LICENSED PROFESSIONAL ENGINEER
8-24-18

BID SET

DATE ISSUED: 08/24/2018

COPYRIGHT 2018

C2.1

PAVING DETAILS

COUNTY APPROVAL:
SIGNATURE _____ DATE_____

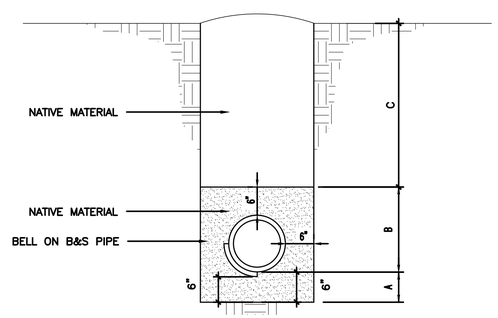

"A" CEMENT STABILIZED SAND (1 1/2 SACKS/TON)
(UNDER PAVEMENT OR LESS THAN 1' FROM PAVEMENT EDGE)
PLACED SAME DAY AS PIPE IS LAID.

"A" ON SITE SOIL BACKFILL TO BE PLACED IN 8"
LAYERS & COMPACTED TO 95% MAX DRY DENSITY.

"B" CEMENT STABILIZED SAND (1 1/2 SACKS/TON)
(UNDER PAVEMENT OR LESS THAN 1' FROM PAVEMENT EDGE)
PLACED SAME DAY AS PIPE IS LAID.

"B" ON SITE SOIL BACKFILL TO BE PLACED IN 8"
LAYERS & COMPACTED TO 95% MAX DRY DENSITY.

"C" CEMENT STABILIZED SAND (1 1/2 SACKS/TON)
(UNDER PAVEMENT OR LESS THAN 1' FROM PAVEMENT EDGE)
PLACED SAME DAY AS PIPE IS LAID.

"C" ON SITE SOIL BACKFILL TO BE PLACED IN 8"
LAYERS & COMPACTED TO 95% MAX DRY DENSITY.

NOTES:
ALL EXTERIOR CRACKS SHALL BE
WRAPPED WITH EVERGRIP EX-WRAP
BY GULF STATES ASPHALT CO., INC.

RCP TRENCH EMBEDMENT AND BACKFILL (1)

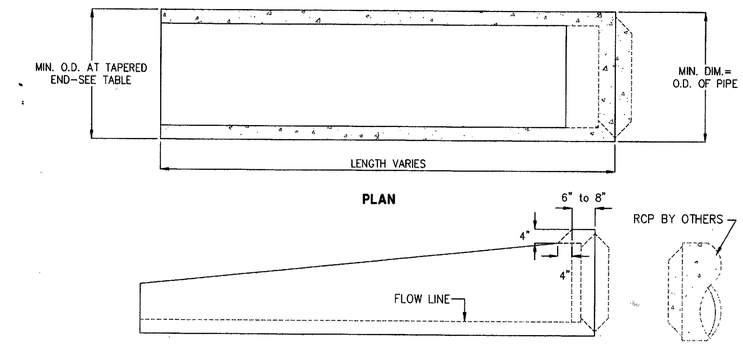

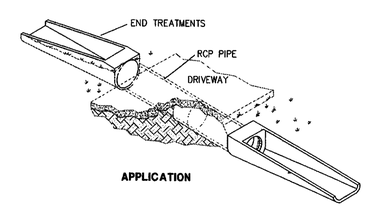

PIPE I.D.	MIN. WALL THICK.	MIN. O.D.	SLOPE	MINIMUM LENGTH RUBBER GASKET	MINIMUM LENGTH TONGUE & GROOVE	MIN. O.D. @ TAPERED END
12"	2"	16"	5:1	–	4'-4"	16"
15"	2"	19"	6:1	–	6'-1"	19"
18"	2-1/2"	23"	4:1	5'-9"	–	21-1/2"
18"	2-1/2"	23"	4:1	–	5'-3"	21-1/2"
18"	2-1/2"	23"	6:1	8'-5"	–	21-1/2"
18"	2-1/2"	23"	6:1	–	7'-8"	21-1/2"
24"	3"	30"	4:1	8'-2"	–	27"
24"	3"	30"	4:1	–	7'-5"	27"
24"	3"	30"	6:1	12'-0"	–	27"
24"	3"	30"	6:1	–	11'-0"	27"
30"	3-1/2"	37"	4:1	9'-2"	9'-2"	31"
30"	3-1/2"	37"	6:1	13'-4"	13'-4"	31"
36"	4"	44"	4:1	10'-10"	10'-10"	36"
36"	4"	44"	6:1	15'-10"	15'-10"	36"
42"	4-1/2"	51"	4:1	12'-8"	12'-8"	41-1/2"
42"	4-1/2"	51"	6:1	18'-9"	18'-9"	41-1/2"

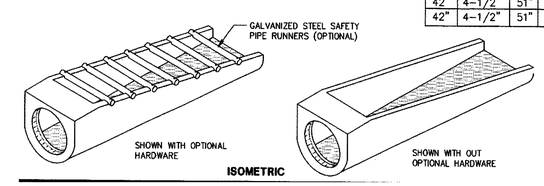

© Park 2002

SAFETY END TREATMENT (2)

GALVESTON COUNTY
BEACH PAVILION
CRYSTAL BEACH, TX 77650

BE-Arc LLC Project No : C-13-007.01

SHELMARK ENGINEERING, L.L.C.
CIVIL | MARINE | PLANNING | STRUCTURAL
920 FM 517 ROAD EAST | DICKINSON, TEXAS 77539
TX FIRM NO. F-2215

easterwood ARCHITECTS STUDIO
EASTERWOOD@BE-ARC.COM
409-354-8976
2328 BALL STREET
GALVESTON TEXAS 77550

DATE	REVISION

STATE OF TEXAS
MARCUS J. MICHNA
84739
LICENSED PROFESSIONAL ENGINEER
8-24-18

BID SET

DATE ISSUED: 08/24/2018

COPYRIGHT 2018

C2.2

STORM SEWER DETAILS

COUNTY APPROVAL:
SIGNATURE _____ DATE_____

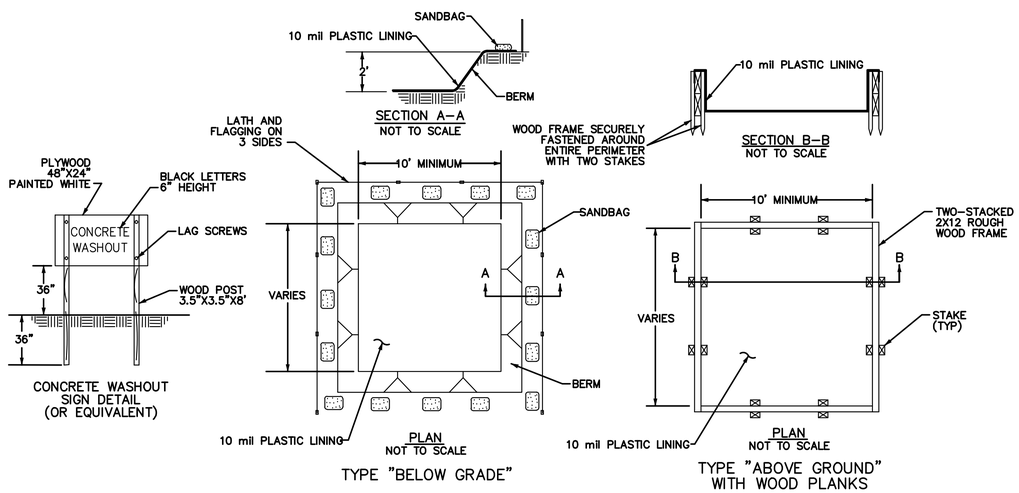

NOTES:

1. CONCRETE WASHOUT FACILITIES ARE TO BE LOCATED AT LEAST 50' FROM STORM DRAIN INLETS, OPEN DRAINAGE FACILITIES, OR WATER BODIES.
2. A CONCRETE WASHOUT SIGN SHALL BE INSTALLED WITHIN 30' OF THE CONCRETE WASHOUT FACILITY.
3. ONCE 75% OF THE ORIGINAL VOLUME OF THE WASHOUT PIT IS FILLED OR IF THE LINER IS TORN, THE MATERIAL MUST BE REMOVED AND PROPERLY DISPOSED OF ONCE IT IS COMPLETELY HARDENED. ONCE THE HARDENED CONCRETE IS REMOVED, THE LINER MUST BE REPLACED (IF TORN). A NEW PIT MUST BE CONSTRUCTED IF THE ORIGINAL STRUCTURE IS NO LONGER SUITABLE.
4. ONCE THE PIT IS NO LONGER NEEDED, ENSURE ALL WASHOUT MATERIAL HAS COMPLETELY HARDENED, THEN REMOVE AND PROPERLY DISPOSE OF ALL MATERIALS.

CONCRETE TRUCK WASHOUT 1

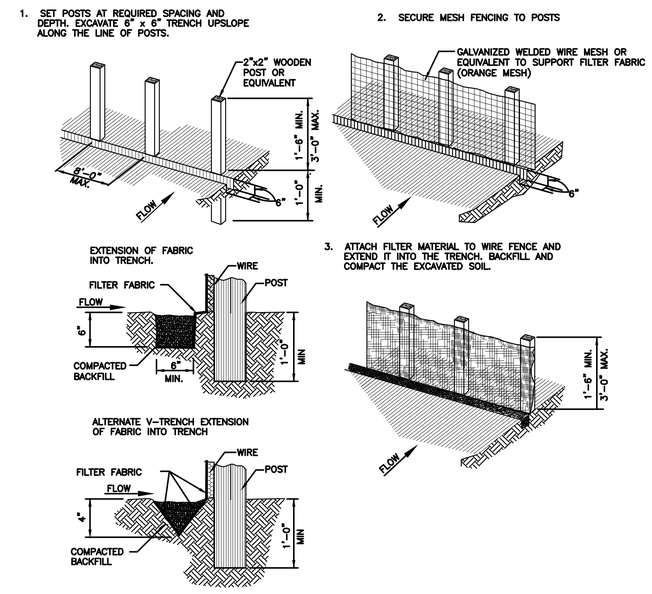

GENERAL NOTES:

1. SECURELY FASTEN MESH FENCING TO POSTS WITH STAPLES OR TIE WIRES.
2. SECURELY FASTEN FILTER FABRIC TO MESH FENCING.
3. WHEN TWO SECTIONS OF FILTER FABRIC ADJOIN EACH OTHER, OVERLAP 6 INCHES AT A POST, FOLD TOGETHER, AND ATTACH TO A POST.
4. REMOVE SEDIMENT DEPOSITS WHEN SILT REACHES ONE–THIRD OF THE HEIGHT OF THE FENCE IN DEPTH.

REINFORCED FILTER FABRIC BARRIER 2

GALVESTON COUNTY
BEACH PAVILION
CRYSTAL BEACH, TX 77650

BE–Arc LLC Project No : C–13–007.01

SHELMARK ENGINEERING, L.L.C.
CIVIL | MARINE | PLANNING | STRUCTURAL
920 FM 517 ROAD EAST | DICKINSON, TEXAS 77539
TX FIRM NO. F-2113

easterwood ARCHITECTS STUDIO
2328 BALL STREET
GALVESTON TEXAS 77550
409-354-8976
EASTERWOOD@BE-ARC.COM

DATE	REVISION

STATE OF TEXAS
MARCUS J. MICHNA
84739
LICENSED
PROFESSIONAL ENGINEER
8-24-18

BID SET

DATE ISSUED: 08/24/2018

COPYRIGHT 2018

C2.3

SWPPP DETAILS

COUNTY APPROVAL:
SIGNATURE _____ DATE_____

ABBREVIATIONS

&	And
∠	Angle
@	At
℄	Centerline
°	Degrees
Ø	Diameter
±	Plus or Minus
#	Pound or Number
Acous.	Acoustical
A.D.	Area Drain
Adj.	Adjustable
Aggr.	Aggregate
A.F.F.	Above Finished Floor
AL	Aluminum
Approx.	Approximate
Arch.	Architectureal
Asph	Asphalt
BD.	Board
Bit.	Bituminous
Bldg.	Building
Blk	Block
Blk'g	Blocking
Bm	Beam
Bot.	Bottom
B.O.	Bottom Of
Cab.	Cabinet
C.B.	Catch Basin
Cem.	Cement
Cer.	Ceramic
C.I.	Cast Iron
C.G.	Corner Guard
CJ	Control Joint
	Construction Joint
Clg.	Ceiling
Clo.	Closet
Clr.	Clear
C.O.	Cased Opening
Col.	Column
Conc.	Concrete
Conn.	Connection
Constr.	Construction
Cont.	Continuous
Corr.	Corridor
Ctsk.	Countersunk
Cntr.	Counter
Ctr.	Center
Cust.	Custodian
Dbl.	Double
Dept.	Department
D.F.	Drinking Fountain
Det.	Detail
Dia.	Diameter
Dim.	Dimension
Disp.	Dispenser
Dn.	Down
D.O.	Door Opening
Dr.	Door
Dwr.	Drawer
D.S.P.	Dry Stand Pipe
Dwg.	Drawing
E.	East
EA	Each
EJ	Expansion Joint
EL	Elevation
Elec.	Electrical
Elev.	Elevator
Emer.	Emergency
Encl.	Enclosure
E.A.	Electrical Power Board
EQ	Equal
Eqpt.	Equipment
EWC	Electrical Water Cooler
Ext'g	Existing
Exp.	Expansion
Expo.	Exposed
Ext.	Exterior

FA	Fire Alarm
FB	Flat Bar
FD	Floor Drain
Fnd.	Foundation
FE	Fire Extinguisher
FEC	Fire Extinguisher Cabinet
FFE	Finished Floor Elevation
FHC	Fire Hose Cabinet
Fin.	Finish
Fl.	Floor
Flash.	Flashing
Fluor.	Fluorescent
FOC	Face of Concrete
FOF	Face of Finish
FOS	Face of Stud
Fprp	Fire Proof
FS	Full Size
Ft.	Foot or Feet
Ftg.	Footing
Furr.	Furring
Fut.	Future
FV	Field Verify
Ga.	Gauge
Galv.	Galvanized
GB	Grab Bar
GL	Glass
Gnd.	Ground
Gr.	Grade
Gyp.	Gypsum
HB	Hose Bib
HC	Hollow Core
Hdwd.	Hardwood
HM	Hollow Metal
Horiz.	Horizontal
Hr.	Hour
Hgt.	Height
ID	Inside Diameter
Insl.	Insulation
Int.	Interior
Jan.	Janitor
Jt.	Joint
Kit.	Kitchen
Lab.	Laboratory
Lam.	Laminate
Lav.	Lavatory
Lkr.	Locker
Lt.	Light
Max.	Maximum
MC	Medicine Cabinet
Mech.	Mechanical
Memb.	Membrane
Mtl.	Metal
Mfr.	Manufacturer
Min.	Minimum
Mir.	Mirror
Misc.	Miscellaneous
MO	Masonry Opening
Mtd.	Mounted
Mul.	Mullion
N	North
NE	Northeast
NIC	Not in Contract
No. or #	Number
Nom.	Nominal
NTS	Not to Scale
NW	Northwest
OA	Overall
OC	On Center
OD	Outside Diameter
Off.	Office
Opng.	Opening
Opp.	Opposite

Prcst.	Precast
PL	Plate
P.Lam.	Plastic Laminate
Plas.	Plaster
Plwd.	Plywood
Pr.	Pair
Ptd.	Painted
PTD	Paper Towel Dispenser
PTD/R	Paper Towel Dispenser & Receptacle Combo
Ptn.	Partition
PTR	Paper Towel Receptacle
R	Riser
Rad.	Radius
RD	Roof Drain
Ref.	Reference
Refr	Refrigerator
Reinf.	Reinforced
Req.	Required
Resil.	Resilient
Rm.	Room
RO	Rough Opening
S	South
SC	Solid Core
SCD	Seat Cover Dispenser
Sched.	Schedule
SD	Soap Dispenser
SE	Southeast
Sect.	Section
Slf	Shelf
Shr.	Shower
Sht.	Sheet
Sim.	Similar
SND	Sanitary Napkin Dispenser
SNR	Sanitary Napkin Receptacle
Spec.	Specification
Sq.	Square
SS	Stainless Steel
S.sk.	Service Sink
Sta.	Station
Std.	Standard
Stl.	Steel
Stor.	Storage
Strl.	Structural
Susp.	Suspended
SW	Southwest
Sym.	Symmetrical
Trd.	Thread
TB	Towel Bar
TC	Top of Curb
Tel.	Telephone
Terr.	Terrazzo
T&G	Tongue and Groove
T	Thick
Th	Thick
TO	Top Of
TOH	Top of Header
TOP	Top of Pavement
TOS	Top of Steel
TOW	Top of Wall
TPD	Toilet Paper Dispenser
Typ.	Typical
Unf.	Unfinished
UNO	Unless Noted Otherwise
Ur.	Urinal
Vert.	Vertical
Vest.	Vestibule
W	West
W/	With
WC	Waster Closet
W/O	Without
Wp.	Waterproof
Wsct.	Wainscot
Wt.	Weight

SYMBOLS & LEGENDS

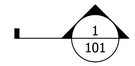

Section Mark Symbol: Indicates Detail Number and Sheet Number

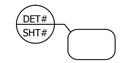

Detail Symbol: Indicates section detail number and sheet number where it is located

Exterior Elevator Symbol: Indicates elevation number and sheet number where it is located

Interior Elevation Symbol: Indicates interior elevation number and sheet number where it is located.

Note Symbol: Indicates numbered sheet specific notes by symbol

Wall Type Mark Symbol: Indicates particular configuration of a wall. Refer to wall type sheet(s).

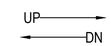

Stair Direction Symbol: Indicates the direction of the stair, up or down.

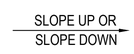

Slope Arrow Symbol: Indicates the slope direction of a particular floor level plane.

Roof Slope Arrow: Indicates the roof slope direction.

Elevation Symbol: Indicates a building level elevation

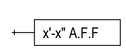

Ceiling Elevation Mark Symbol: Indicates the ceiling elevation. Refer to Reflected Ceiling Plans.

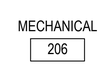

Room Label System: Indicates room number. Refer to Room Finish Schedule

Door Symbol: Indicates door number. Refer to Door Schedule

Window Symbol: Indicates window number. Refer to Window Schedule.

Accessory Symbol: Indicates the restroom's accessories. Refer to Finish Schedule.

GENERAL NOTES:

1. All materials and workmanship shall confirm to project documents, applicable requirements of the:
   - 2012 International Building Code
   - 2012 International Energy Code
   - 2012 International Fire Code 2009 International Fire Code
   - 2012 International Fuel and Gas Code
   - 2012 Mechanical Code
   - Flood Ordinance No. 02-085
   - National Electrical Code, 2014
   - 2012 American with Disabilities Act
   - Texas Accessibility Code
   - and all local amendments, ordinances, codes and requirements.
2. The General Contractor must inspect the site before beginning work and identify conflicts or inconsistencies between the contract documents and existing conditions and/or conditions that require deviation from constructing the work as indicated in the contact documents.
3. The General Contractor must comply with the rules of the City of Galveston for the construction, use of premises, access to the project site and trash removal.
4. The General Contractor shall be responsible for:

a. Dimensions which must be confirmed and correlated at the job site.

b. Fabrication processes and techniques of construction.

c. Coordinating the work, or other trades and the satisfactory performance of the work.

5. The documents indicate general and typical details of construction, similar details apply to similar conditions subject to review by the Architect/ Engineer.
6. Refer to Architectural Drawing for:

a. Building floor plans, elevations, sections, and details.

7. Refer to Structural Drawings for:

a. Foundation Plans and Dimensions

b. Framing Plans and Dimensions

c. Roof Framing Notes and Dimensions

d. Structural Details and Notes

8. All wood in contact with concrete, masonry, or exposed to weather shall be ACQ treated lumber. All fasteners in ACQ treat wood to be Stainless Steel.
9. Restroom walls to have moisture resistant gypsum board.
10. Mechanical Furr-downs, cabinets, etc. that abut rated wall/ceiling/floor assemblies must be installed after the fire rated gypsum board.
11. All electrical and plumbing penetrations in rated assemblies shall be fire stopped top, bottom, and sides with UL approved fire rated materials.
12. All Insulation shall have a flame spread rating and a smoke development rating as required by the International Building Code.
13. All veneered walls to comply with fastening requirements per the building Code being enforced by the Authority Having Jurisdiction on this project.
14. Fire Stopping and fire blocking are not shown. General Contractor shall fire stop and fire block as required by the Building Code.
15. Provide blocking for all millwork, light fixtures, accessories, and recessed fixtures.
16. All insulation, windows, plumbing fixtures, and other energy related items shall meet Energy Code Requirements.

GALVESTON COUNTY
BEACH PAVILION
CRYSTAL BEACH, TX 77650

BE–Arc LLC Project No : C–17–003.01

easterwood ARCHITECTS STUDIO
409-354-8976
EASTERWOOD@BE-ARC.COM
2328 BALL STREET
GALVESTON TEXAS 77550

DATE	REVISION

BID SET

DATE ISSUED: 08/10/2018

COPYRIGHT 2018

G0.1

COUNTY APPROVAL:
SIGNATURE _____ DATE_____

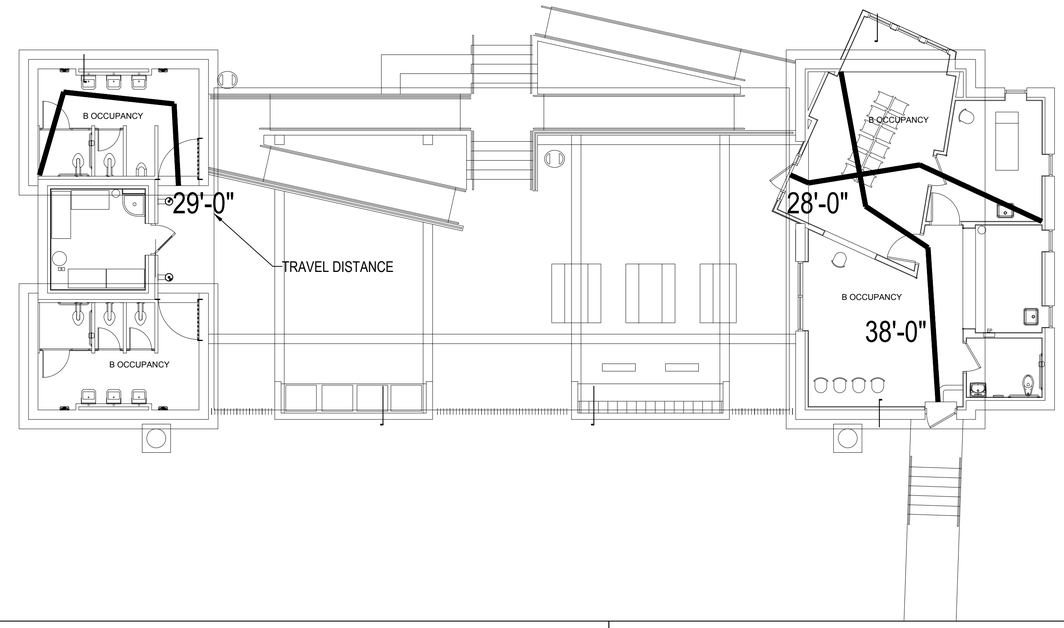

GALVESTON COUNTY BEACH PAVILION - CRYSTAL BEACH, TX - CODE ANALSIS

Code: 2006 International Building Code
2009 International Energy Conservation Code
2006 International Fire Code
2006 International Mechanical Code
2006 International Plumbing Code
Texas Accessibility Standard

1. Occupancy and Construction Type Classification – B each side of pavilion Type 3B construction.

BUILDING SPACE USE AREAS (PER TABLE 1004.1):

Reception and Service Pavilion
A -3 Waiting area Occupancy / Occupant Load (per 15 sf) 286 SF = 19
Less than 50 occupants – use B Occupancy

B- Service area Occupancy / Occupant Load (per 100 sf) 763 SF .= 8

Restrooms and Storage
B Restroom Occupancy / Occupant Load (per 100 sf) 431 SF = 4

S Storage Occupancy / Occupant Load 806 SQFT (per 300 sf) 169 SF = 1

Total Building First Floor Space Occupant Load: 32

Total First Floor Area: 1700 SF

Proposed areas comply with Table 503 of 2006 IBC

Building Type is Type-3B. Masonry construction and interior wood framing

	Occupancy	Construction	Max No. Stories	Max Area per Floor
Allowed	B	3B	3 Stories	19,000SF

**The space is planned to be not Sprinklered

3. Fire Resistance Requirements – Table 601 Type 3B

	Rating
Structural Frame	0 Hr.
Bearing Walls (Ext)	2 Hr.
Bearing Walls (Int)	0 Hr.
Non-Bearing Walls (Ext)	0 Hr.
Non-Bearing Walls (Int)	0 Hr.
Floor	0 Hr.
Roof	0 Hr.

704.5 Fire Resistance Ratings – Exterior walls shall be fire-resistant rated in accordance with tables 601 and 602. The fire resistance rating of exterior walls with a fire separation distance of greater than 5 feet shall be rated for exposure to fire from the inside. The fire-resistance rating of exterior walls with a fire separation distance of 5 feet or less shall be rated for exposure to fire from both sides.

4. Exterior Wall Openings – Table 704.8
Existing building complies with Openings Permitted for non-sprinklered Building. All Openings Located on the North, South, and East.

** North Wall setback >30' from property line. Faces alley/street Openings allowed– Actual 6%
** East Wall setback 30' from property line. Faces alley/street Openings allowed– Actual 2%
** South Wall setback 30' from property line. Openings allowed– Actual 7%
** West Wall of Structure Setback 30' from property line. Unlimited Openings allowed – Actual 4%

5. Shaft and Vertical Exit Enclosures – Section 707, 708
No vertical exit enclosures

6. Required Separations - Table 508.4
No separations

7. Fire Resistant Requirements for Exterior Walls - Table 602

> 30'	0 Hr.
>10' - <30'	0 Hr.
>5' - <10'	1 Hr.
<5'	1 Hr.

Exterior Walls are 1 Hr based on construction type.

8. Occupant Load Analysis – Table 1004.1.1
See combined occupancy calculations listed above in 1.

9. Means of Egress – NFPA 101 and IBC Section 1009
Max. Travel Distance = B occupancy < 200 feet PER TABLE 1016.1 – Actual Max Travel Distance 70'
Min. Corridor Width 36 or .2" per occupant
Min. Egress Width per occupants – NFPA Table 7.3.2.1 and Section 1015

	Inches per Occupant	
Corridors/Doors	0.2	Non- Sprinklered

Corridors/Doors Width Required 32 x .2 = 6.4"

Number of Required Exits – Section 1015 and 1021

No Occupants	No Exits
<50	1
50-500	2
500-1000	3
>1000	4

Required Number of Exits 1 – Actual Provided 1

Maximum Dead End Corridor = 20 feet - Actual 0'. Rooms length < 2.5 times width.

GALVESTON COUNTY
BEACH PAVILION
CRYSTAL BEACH, TX 77650

BE–Arc LLC Project No : C–17–003.01

eas easterwood ARCHITECTS STUDIO
2328 BALL STREET
GALVESTON TEXAS 77550
409-354-8976
EASTERWOOD@BE-ARC.COM

DATE	REVISION

BID SET

DATE ISSUED: 08/10/2018

COPYRIGHT 2018

G0.1

CODE REVIEW

NTS | 1 | CODE

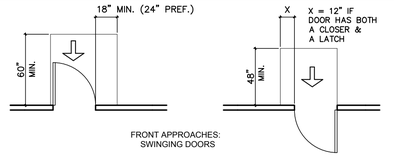

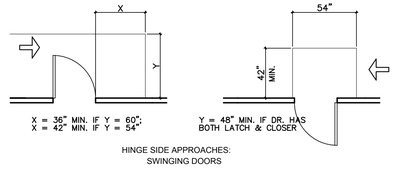

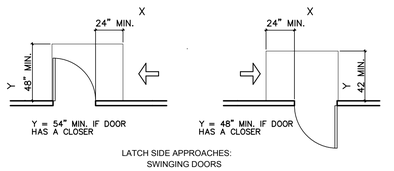

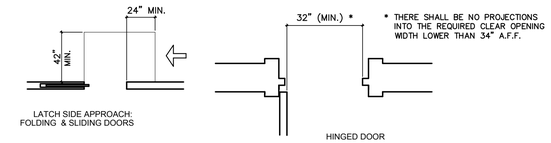

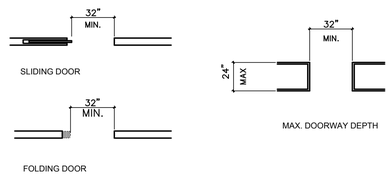

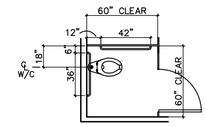

GRAB BARS IN ACCESSIBLE STALLS

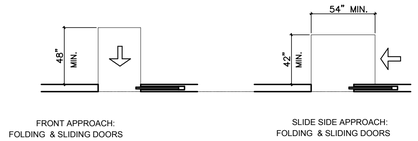

MANEUVERING CLEARANCES AT DOORS

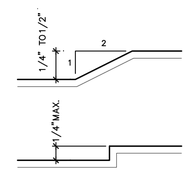

ELEVATION CHANGES: ACCESSIBLE ROUTES

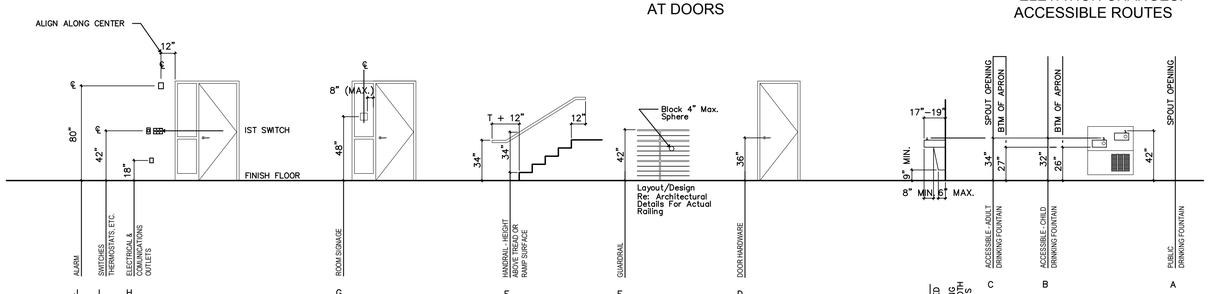

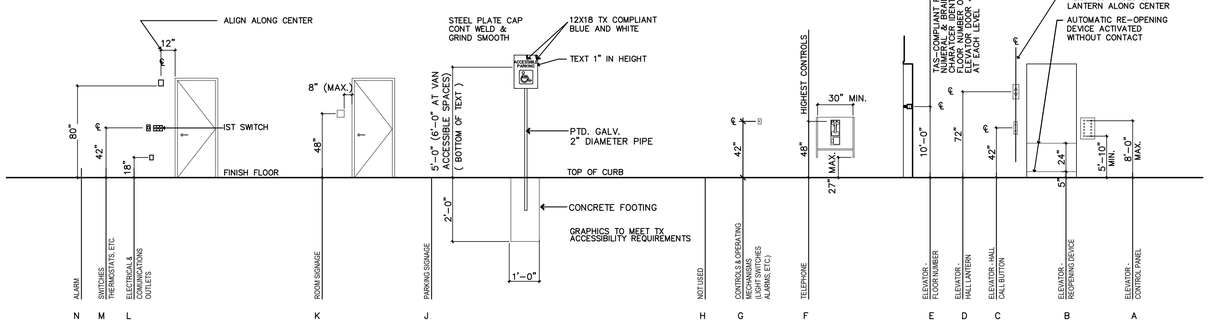

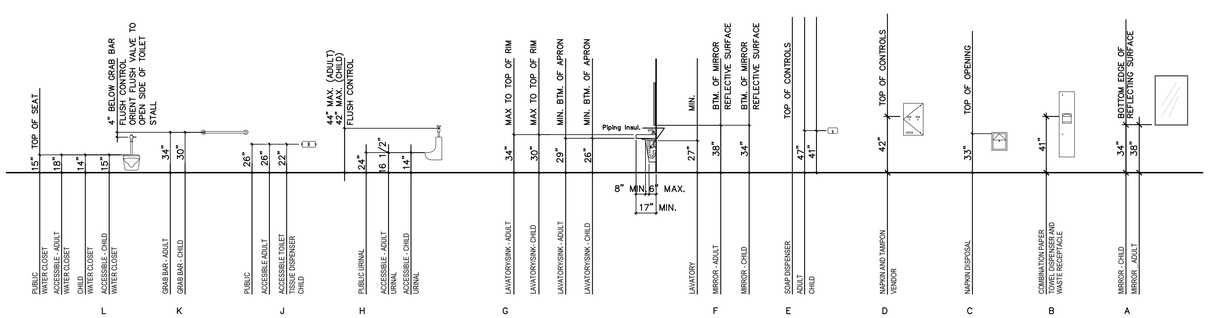

TAS AND ADA

COUNTY APPROVAL:
SIGNATURE _____ DATE_____

TEXAS ACCESSIBILITY CODE REQUIREMENTS

General Notes:
1. Minimum clear width of accessible route: 36".
2. Running slope shall not exceed 1:20 (Cross slope shall not exceed 1:50).
3. 1/4" to 1/2" changes in level require edge to be beveled with a slope no greater than 1:2.
4. The highest operable part of controls, dispensers, receptacles and other operable equipment shall be placed not higher than 3' 5-1/2" and no lower than 1' 3-1/2" above finished floor. These requirements shall apply to controls and operating mechanisms which are expected to be operable by occupants, visitors, or other users of a building or facility and may include, but are not limited to, thermostats, light switches, alarm activating devices, ventilators and electrical outlets.
5. Provide solid blocking at all wall mounted accessories.
6. For areas where children are under High School age are the primary users, accessible mounting heights are different & should be adjusted accordingly.

Ground and Floor Surfaces:
1. Ground and floor surfaces along accessible routes and in accessible rooms and spaces including floors, walks, ramps, stairs, and curb ramps, shall be stable, firm and slip-resistant.

Ramps:
1. Maximum slope: 1:12.
2. Transitions shall be flush and free of abrupt changes.
3. Maximum slope of adjacent surfaces: 1:20.
4. Minimum clear width: 36".
5. Handrails required if rise exceeds 6" or run exceeds 72", except at curb ramps
6. Handrails shall be provided on both sides of ramps.
7. Inside rail on switchback or dogleg ramps shall be continuous.
8. Where not continuous, rails shall extend at least 12" beyond top and bottom of ramp, parallel to ground surface.
9. Height of handrails: 34" (34-36).
10. Clear floor space between rails and any wall shall be 1-1/2".
11. Gripping surfaces shall be uninterrupted by newel posts, other construction elements, or obstructions.
12. Ends shall be rounded, or returned smoothly to floor, wall or post.
13. Handrails shall not rotate in their fittings.
14. Diameter or width of gripping surface shall be 1-1/4" to 1-1/2", or shall provide an equivalent gripping surface.
15. Exterior curb ramps will have colored concrete to contrast with adjacent concrete color.
16. Exterior curb ramps will have grooves 1/4" deep, 1/4" to 3/4" wide, 3/4" to 2" apart, and arranged so that water will not accumulate and the surfaces are detectable underfoot.

Stairs:
1. All steps on a flight of stairs shall have uniform riser heights and tread widths. Minimum tread depth shall be 11" unless otherwise noted, measured from riser to riser.
2. Undersides of nosings shall not be abrupt. Radius of curvature at leading tread edge shall not exceed 1/2". Risers shall be sloped or underside of nosing shall have an angle not less than 60 degrees. Nosings shall project no more than 1-1/2".
3. Handrails are required at both sides of all stairs.
4. Inside rail on switchback or dogleg stairs shall be continuous.
5. Where not continuous, handrail extensions shall be provided as follows: Top of stair flights: Parallel to floor, 12" minimum beyond top riser nosing. Bottom of stair flights: Continue sloping for one tread width beyond bottom rise, plus 12" minimum parallel to floor.
6. Handrails height: 34" measured from stair nosing.
7. Clear floor space between rail and any wall shall be 1-1/2".
8. Gripping surfaces shall be interrupted by newel posts, other construction elements, or obstructions.
9. Ends shall be rounded, or returned smoothly to floor, wall, or post.
10. Handrails shall not rotate in their fittings.
11. Diameter or width of gripping surface shall be 1-1/4" to 1-1/2", or shall provide an equivalent gripping surface.

Doors:
Re: Clearance diagrams - this sheet.

1. Doorways shall provide a clear opening of 32" min. with the door open 90 degrees.
2. Openings more than 24" in depth shall provide a clear opening of 36" minimum.
3. Maximum threshold height: 1/2".
4. Door hardware: Handles, pulls, latches, locks and other operating devices shall have a shape that is easy to grasp with one hand and does not require tight grasping, tight pinching or twisting of the wrist to operate.
5. Lever-operated mechanisms, push-type mechanisms, and U-shaped handles are acceptable designs.
6. Hardware required for passage shall be mounted no higher than 41-1/2" above finished floor.
7. Door Closer: If a door has a closer, then the sweep period of the closer shall be adjusted so that from an open position of 70 degrees, the door will take at least 3 seconds to move to a point 3" from the latch, measured to the leading edge of the door.
8. Door opening Force: The maximum force for pushing or pulling open a door shall be as follows:
   a. Exterior hinged doors: 8.5 lb.
   b. Interior hinged doors: 5 lb.
   c. Sliding or folding: 5 lb.
   d. Fire doors: minimum opening force allowed by authorities having jurisdiction.
9. Automatic Doors and Power-Assisted Doors: If an automatic door is used, then it shall comply with ANSI/BHMAA156.10-1985. Slowly opening , low powered, automatic doors shall comply with ANSIA156.19-1984. Such doors shall not open to back check faster than 3 seconds and shall require not more than 15 lb to stop door movement. If a power-assisted door is used, its door opening force shall comply with forces listed above and its closing force shall comply with ANSIA156.19-1984

Water Closets:
1. Water closets shall be located 18" from a side wall or partition.
2. The height to the top of the toilet seat shall be 17" to 19" (Adult) 15" (Child).
3. For water closets located in toilet stalls, the following grab bars shall be provided.
   34" above the finish floor (Adult) 30" above the finish floor (Child):
   Side Wall: 42" long minimum, 12" from back wall.
   Back Wall: 36" long minimum, 12" minimum each side of water closet centerline.
4. Flush controls shall be 30" (Adult) 26" (Child) above the finish floor. Controls for flush valves shall be mounted on the wide side of toilet areas.
5. Toilet paper dispensers shall be installed on the side wall, below the grab bar, a maximum 36" from the rear wall.

Urinals:
1. Urinals shall be wall hung with an elongated rim.
2. Flush controls shall be 44" (Adult) 42" (Child) maximum above the finished floor.

Lavatories and Mirrors:
1. Hot water and drain pipes under lavatories shall be insulated or otherwise configured to protect against contact.
2. If medicine cabinets are provided, at least one shall be located with a usable shelf no higher than 41-1/2" above the floor.
3. Max. force allowed for operation of sink and lavatory faucets is 5 Lbf.

Grab Bars:
1. Diameter or width of gripping surface shall be 1-1/4" to 1-1/2", or the shape shall provide an equivalent gripping surface.
2. The space between grab bars and adjacent walls shall be 1-1/2".
3. Grab bars shall not rotate within their fittings.
4. Grab bars and adjacent wall surfaces shall be free of sharp or abrasive surfaces.
5. Edges shall have a radius of 1/8" minimum.

Alarms:
1. Visual alarm signal appliances shall be placed 80 inches above the highest floor level within the space, or 6" below the ceiling, whichever is lower.

Signage:
1. Signs which designate permanent rooms and spaces shall comply with the requirements listed below for:
   Where permanent identification is provided for rooms and spaces, signs shall be installed on the wall adjacent to the latch side of the door.
   Where there is no wall space to the latch side of the door, including at double-leaf doors, signs shall be placed on the nearest adjacent wall.
2. Character Proportion. Letters and numbers on signs shall have a width-to-height ratio between 3:5 and 1:1 and a stroke-width-to-height ratio between 1:5 and 1:10 using upper-case "X" for measurements. Lower case letters are permitted.
3. Raised and Brailled Characters and Pictorial Symbol Signs (Pictograms). Letters and numerals shall be raised 1/32 in, upper case, sans serif or simple serif type and shall be accompanied with Grade 2 Braille. Raised characters shall be at least 5/8 in (16mm) high, but no higher than 2 in (50mm). Pictograms shall be accompanied by the equivalent verbal description placed directly below the pictogram. The border dimension of the pictogram shall be 6 in (152mm) minimum in height.
4. Finish and Contrast. The characters and background of signs shall be eggshell, matte, or other non-glare finish. Characters and symbols shall contrast with their background - either light characters on a dark background or dark characters on a light background.

Wheelchair Lift:
1. Controls and operating mechanisms shall be located so that either a forward or side approach reach is possible from either direction of travel and shall be mounted between at least 28" and 48" above the platform floor.
2. One handrail shall be provided.
3. Wheelstops and guardrails shall be provided to prevent wheel chairs from rolling or slipping off platform edge.

GALVESTON COUNTY
BEACH PAVILION
CRYSTAL BEACH, TX 77650

BE-Arc LLC Project No : C-17-003.01

easterwood ARCHITECTS STUDIO
2328 BALL STREET
GALVESTON TEXAS 77550
409-354-8976
EASTERWOOD@BE-ARC.COM

DATE	REVISION

BID SET

DATE ISSUED: 08/10/2018

COPYRIGHT 2018

G0.3

NTS | 1 | TAS/ADA

COUNTY APPROVAL:
SIGNATURE _____ DATE_____

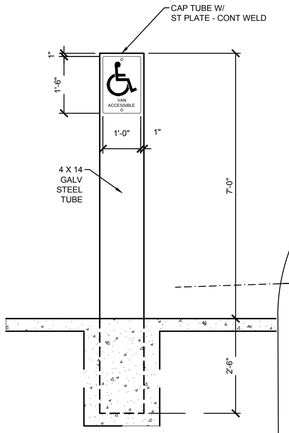

1 SIGN DETAIL
Scale: 1/2" = 1'-0"

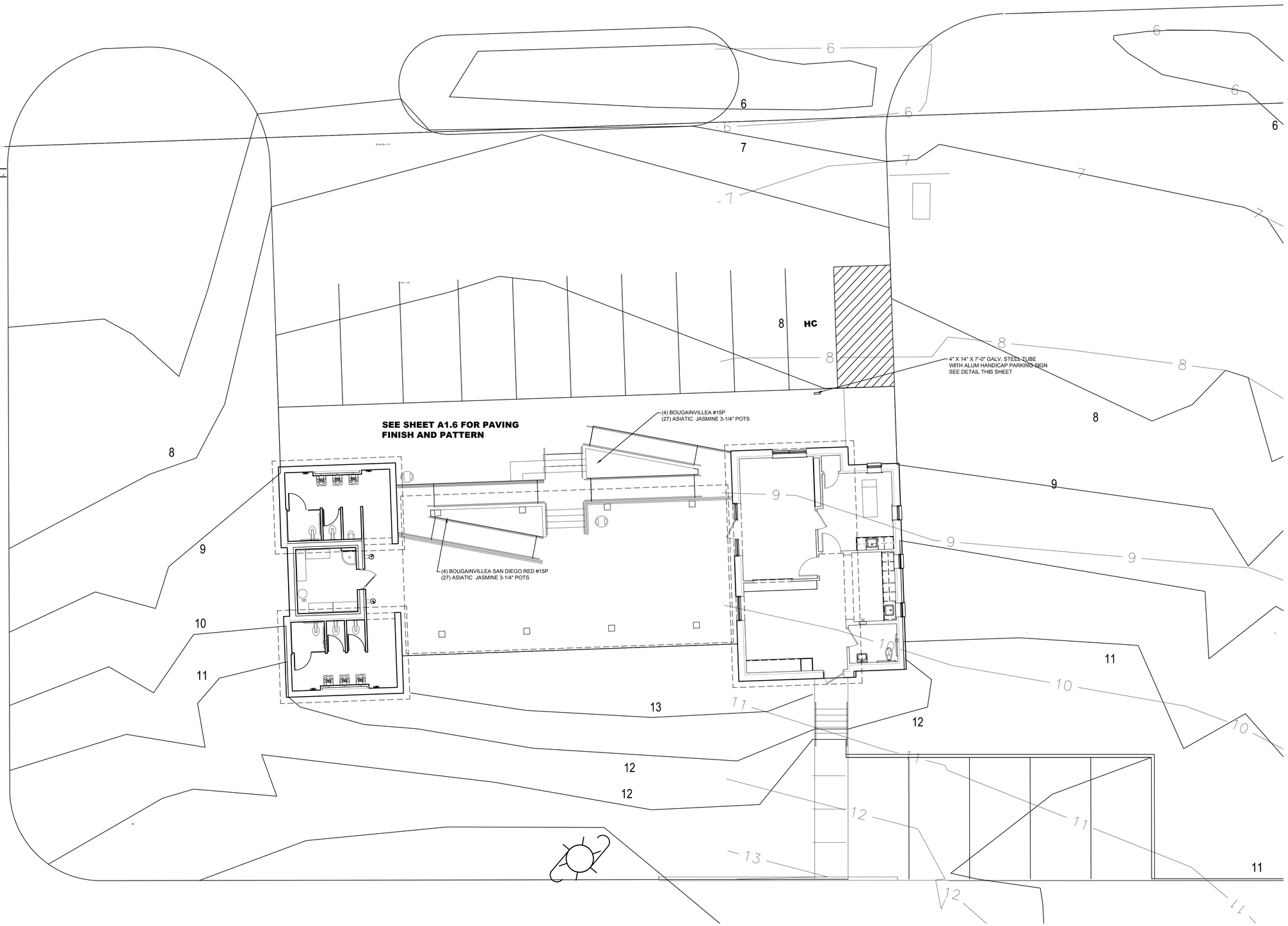

SITE PLAN 1/8" = 1'-0" **1**

GALVESTON COUNTY
BEACH PAVILION
CRYSTAL BEACH, TX 77650

BE–Arc LLC Project No : C–17–003.01

easterwood ARCHITECTS STUDIO
2328 BALL STREET
GALVESTON TEXAS 77550
409-354-8976
EASTERWOOD@BE-ARC.COM

DATE	REVISION

BID SET

DATE ISSUED: 08/10/2018

COPYRIGHT 2018

A0.1

SITE PLAN

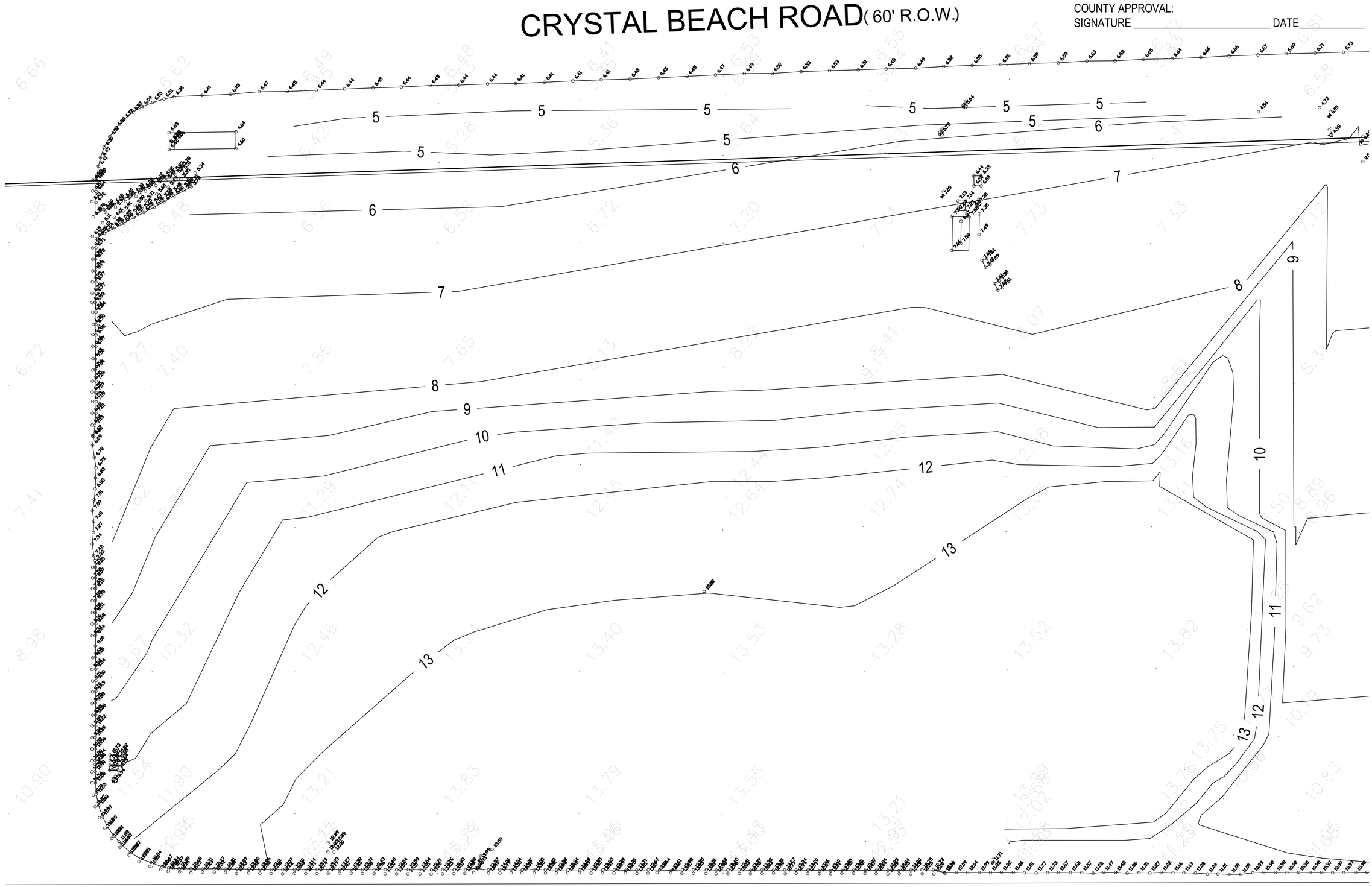

EXISTING CONTOURS

1/8" = 1'-0" | 1

GALVESTON COUNTY
BEACH PAVILION
CRYSTAL BEACH, TX 77650

BE-Arc LLC Project No : C-17-003.01

easterwood ARCHITECTS STUDIO
2328 BALL STREET
GALVESTON TEXAS 77550
409-354-8976
EASTERWOOD@BE-ARC.COM

DATE	REVISION

BID SET

DATE ISSUED: 08/10/2018

COPYRIGHT 2018

A0.2

EXISTING CONTOURS

COUNTY APPROVAL:
SIGNATURE _____ DATE_____

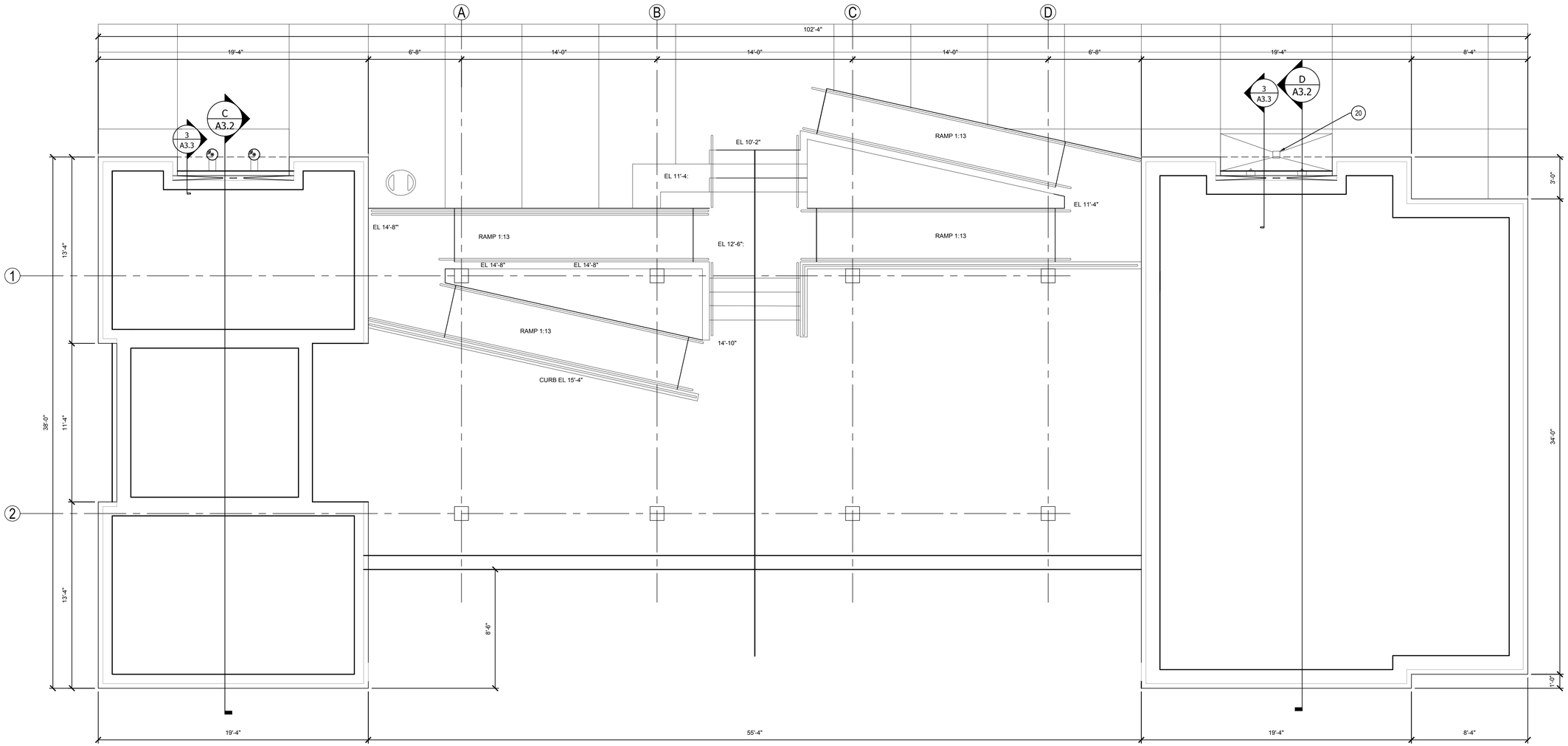

KEY NOTES:
20. FLOOR DRAIN WITH TRAP - ZURN FR05NIA3S-C

N

LOWER LEVEL PLAN 1/4" = 1'-0" **1**

GALVESTON COUNTY
BEACH PAVILION
CRYSTAL BEACH, TX 77650

BE–Arc LLC Project No : C–17–003.01

eas easterwood ARCHITECTS STUDIO
2328 BALL STREET
GALVESTON TEXAS 77550
409-354-8976
EASTERWOOD@BE-ARC.COM

DATE	REVISION

BID SET

DATE ISSUED: 08/10/2018

COPYRIGHT 2018

A1.1

LOWER LEVEL PLAN

COUNTY APPROVAL:
SIGNATURE _____ DATE_____

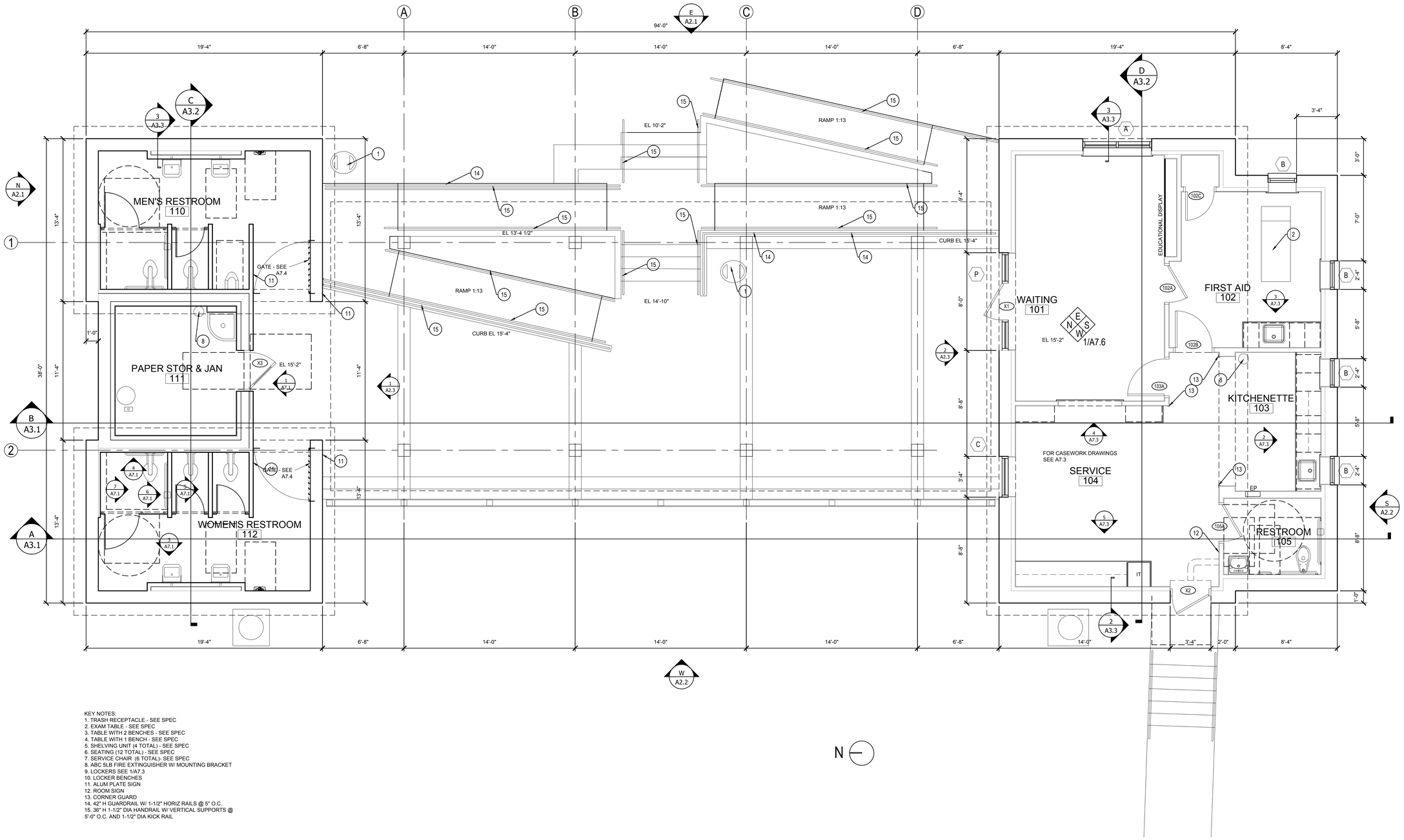

KEY NOTES:
1. TRASH RECEPTACLE - SEE SPEC
2. EXAM TABLE - SEE SPEC
3. TABLE WITH 2 BENCHES - SEE SPEC
4. TABLE WITH 1 BENCH - SEE SPEC
5. SHELVING UNIT (4 TOTAL) - SEE SPEC
6. SEATING (12 TOTAL) - SEE SPEC
7. SERVICE CHAIR (6 TOTAL)- SEE SPEC
8. ABC 5LB FIRE EXTINGUISHER W/ MOUNTING BRACKET
9. LOCKERS SEE 1/A7.3
10. LOCKER BENCHES
11. ALUM PLATE SIGN
12. ROOM SIGN
13. CORNER GUARD
14. 42" H GUARDRAIL W/ 1-1/2" HORIZ RAILS @ 5" O.C.
15. 36" H 1-1/2" DIA HANDRAIL W/ VERTICAL SUPPORTS @ 5'-0" O.C. AND 1-1/2" DIA KICK RAIL

UPPER LEVEL PLAN

1/4" = 1'-0" | 1

GALVESTON COUNTY
BEACH PAVILION
CRYSTAL BEACH, TX 77650

BE–Arc LLC Project No : C–17–003.01

eas easterwood ARCHITECTS STUDIO
2328 BALL STREET
GALVESTON TEXAS 77550
409-354-8976
EASTERWOOD@BE-ARC.COM

DATE	REVISION

BID SET

DATE ISSUED: 08/10/2018

COPYRIGHT 2018

A1.2

UPPER LEVEL PLAN

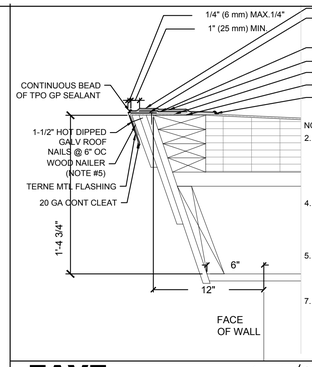

NOTES:

2. INSTALL METALWORK TO MANUFACTURES REQUIREMENTS OR SMACNA RECOMMENDATIONS. IF SHOP FABRICATED METAL EDGE IS USED IT MUST MEET ANSI/SPRI ES-1 OR AN FM STANDARD.
4. WOOD NAILER MUST BE INSTALLED TO MEET APPLICABLE BUILDING CODES OR 200 LBS PER LINEAR FOOT MINIMUM IN ANY GIVEN DIRECTION.
5. FLANGE OF METAL MUST BE FULLY SUPPORTED BY WOOD AND TERMINATED AT LEAST 1/2" FROM EDGE OF WOOD.
7. IF THE FLANGE OF THE METAL EDGE IS NOT COMPLETELY COVERED WITH FLASHING, THEN AN ADDITIONAL PIECE OF FLASHING SHALL BE INSTALLED AT ALL METAL SPLICES.

EAVE 1–1/2" = 1'–0" **1**

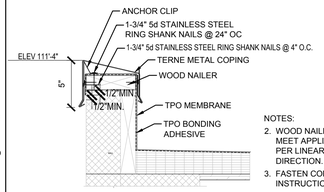

NOTES:

2. WOOD NAILER MUST BE INSTALLED TO MEET APPLICABLE BUILDING CODES OR 200 PER LINEAR FOOT LBS IN ANY GIVEN DIRECTION.
3. FASTEN COPING CLEAT AS PER SUPPLIED INSTRUCTIONS AND FASTENERS.
4. WHEN REINFORCEMENT OF TPO INSTRUCTIONS. MEMBRANE IS EXPOSED, REFER TO UT-LS-14 FOR CUT EDGE SEALANT APPLICATION.

COPING 1–1/2" = 1'–0" **2**

NOTES:

2. WOOD NAILER MUST BE INSTALLED TO MEET APPLICABLE BUILDING CODES OR 200 PER LINEAR FOOT LBS IN ANY GIVEN DIRECTION.
3. FASTEN COPING CLEAT AS PER SUPPLIED INSTRUCTIONS AND FASTENERS.
4. WHEN REINFORCEMENT OF TPO INSTRUCTIONS. MEMBRANE IS EXPOSED, REFER TO UT-LS-14 FOR CUT EDGE SEALANT APPLICATION.

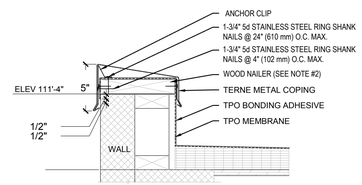

COPING 1–1/2" = 1'–0" **3**

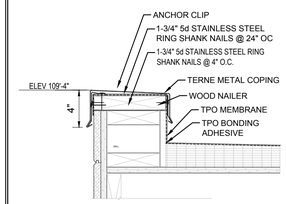

NOTES:

2. WOOD NAILER MUST BE INSTALLED TO MEET APPLICABLE BUILDING CODES OR 200 PER LINEAR FOOT LBS IN ANY GIVEN DIRECTION.
3. FASTEN COPING CLEAT AS PER SUPPLIED INSTRUCTIONS AND FASTENERS.
4. WHEN REINFORCEMENT OF TPO INSTRUCTIONS. MEMBRANE IS EXPOSED, REFER TO UT-LS-14 FOR CUT EDGE SEALANT APPLICATION.

COPING 1–1/2" = 1'–0" **4**

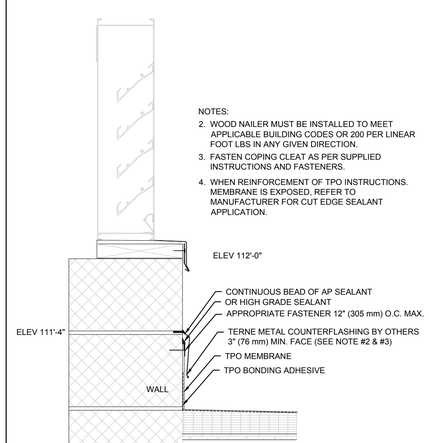

WALL 1–1/2" = 1'–0" **5**

NOTES:

2. INSTALL METALWORK TO MANUFACTURES REQUIREMENTS OR SMACNA RECOMMENDATIONS. IF SHOP FABRICATED METAL EDGE IS USED IT MUST MEET ANSI/SPRI ES-1 OR AN FM STANDARD.
3. GP SEALANT IS REQUIRED ALONG FLASHING WHEN ROOF SLOPE IS 1" PER FOOT OR GREATER.
4. WOOD NAILER MUST BE INSTALLED TO MEET APPLICABLE BUILDING CODES OR 200 LBS PER LINEAR FOOT MINIMUM IN ANY GIVEN DIRECTION.
5. FLANGE OF METAL MUST BE FULLY SUPPORTED BY WOOD AND TERMINATED AT LEAST 1/2" FROM EDGE OF WOOD.
7. IF THE FLANGE OF THE METAL EDGE IS NOT COMPLETELY COVERED WITH FLASHING, THEN AN ADDITIONAL PIECE OF FLASHING SHALL BE INSTALLED AT ALL METAL SPLICES.

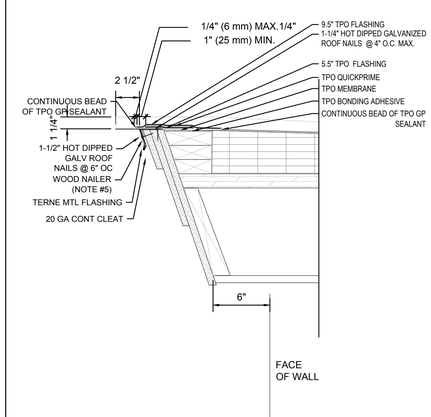

SCUPPER 1–1/2" = 1'–0" **6**

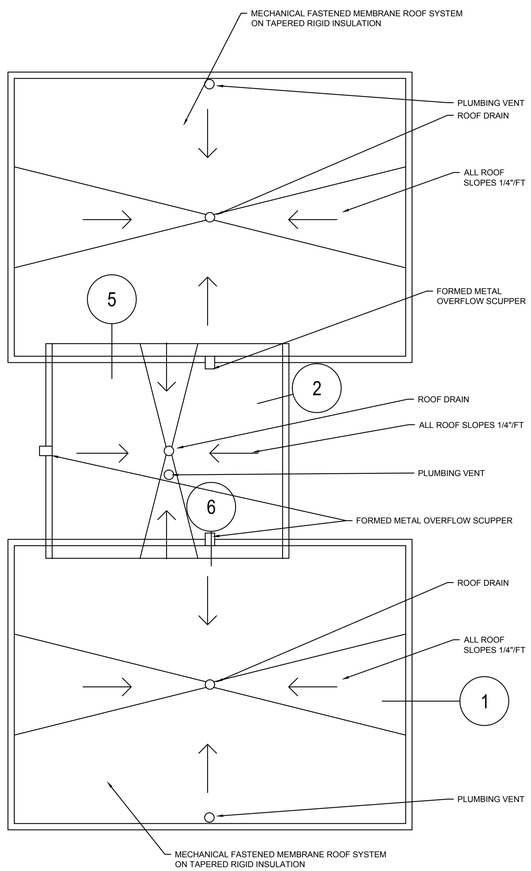

COUNTY APPROVAL:
SIGNATURE _____ DATE_____

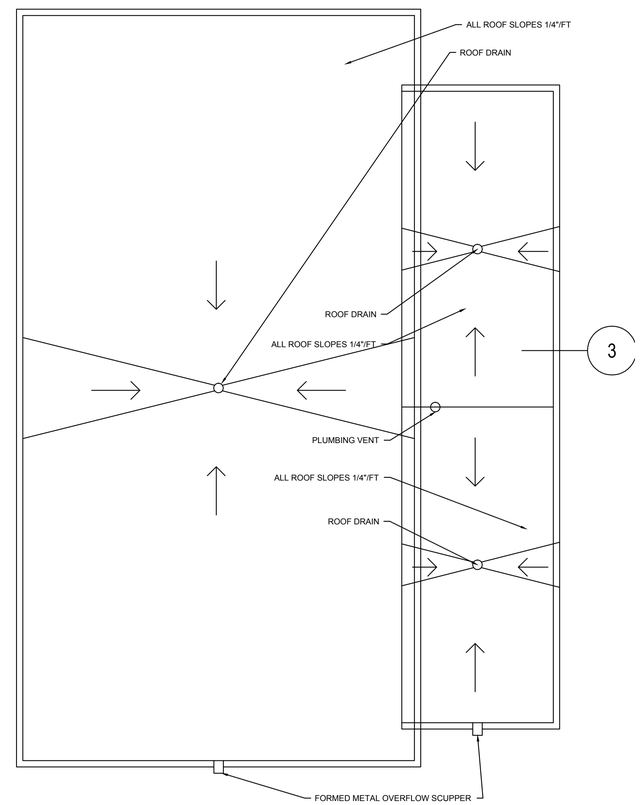

1/4" = 1'-0" **1** ROOF PLAN

GALVESTON COUNTY
BEACH PAVILION
CRYSTAL BEACH, TX 77650

BE–Arc LLC Project No : C–17–003.01

easterwood ARCHITECTS STUDIO
409-354-8976
EASTERWOOD@BE-ARC.COM
2328 BALL STREET
GALVESTON TEXAS 77550

DATE	REVISION

BID SET

DATE ISSUED: 08/10/2018

COPYRIGHT 2018

A1.3

ROOF PLAN AND DETAILS

COUNTY APPROVAL:
SIGNATURE _____ DATE_____

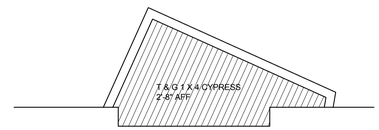

EXTERIOR CEILING UNDER BAY WINDOW

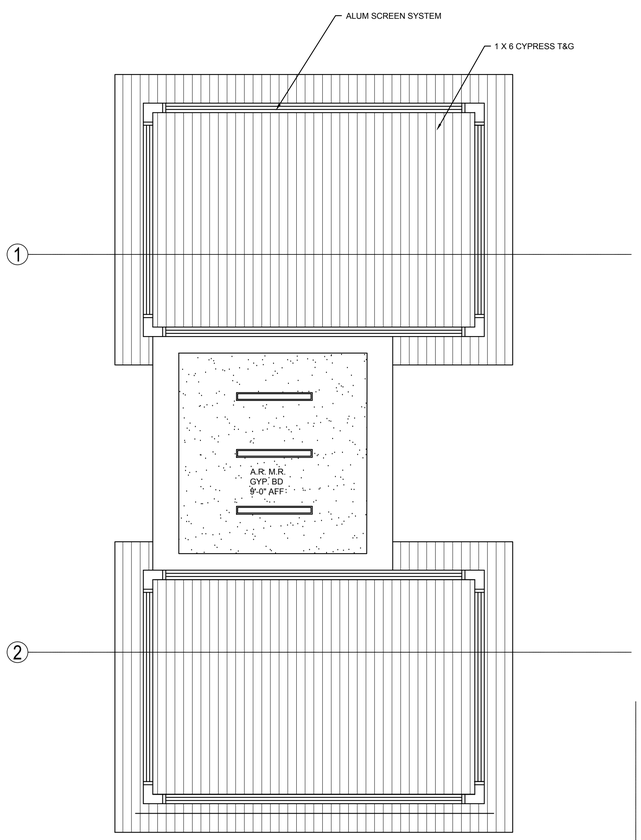

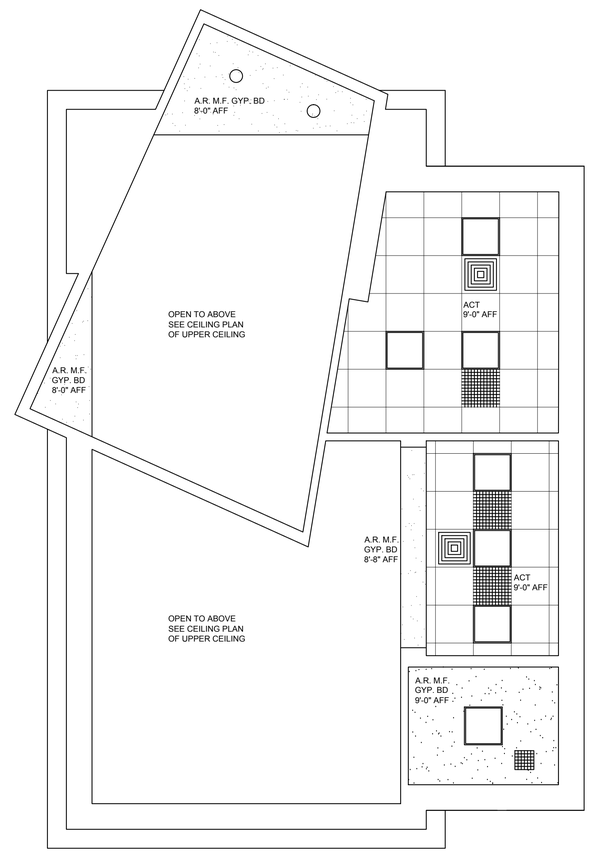

LOWER CEILING PLAN

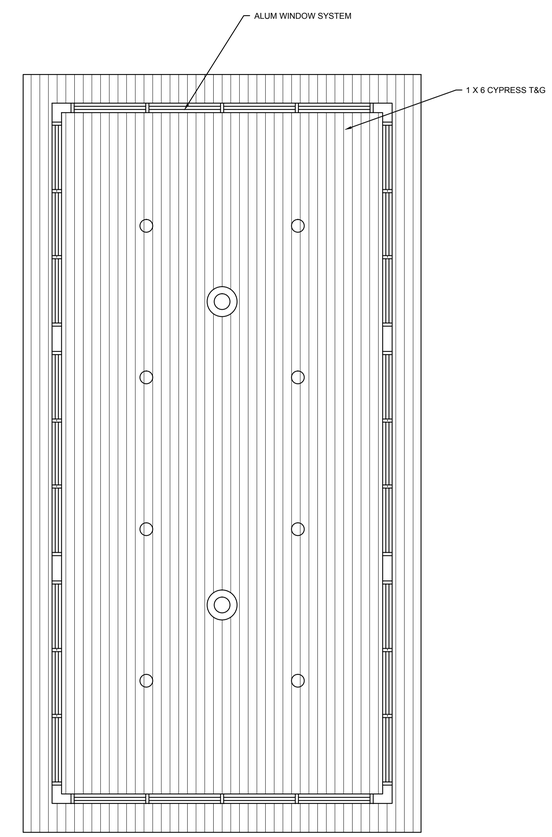

UPPER CEILING PLAN

GALVESTON COUNTY
BEACH PAVILION
CRYSTAL BEACH, TX 77650

BE–Arc LLC Project No : C–17–003.01

easterwood
eas ARCHITECTS STUDIO
409-354-8976
EASTERWOOD@BE-ARC.COM
2328 BALL STREET
GALVESTON TEXAS 77550

DATE	REVISION

BID SET

DATE ISSUED: 08/10/2018

COPYRIGHT 2018

A1.4

REFLECTED CEILING

REFLECTED CEILING PLAN

1/4" = 1'-0" **1**

COUNTY APPROVAL:
SIGNATURE _____ DATE_____

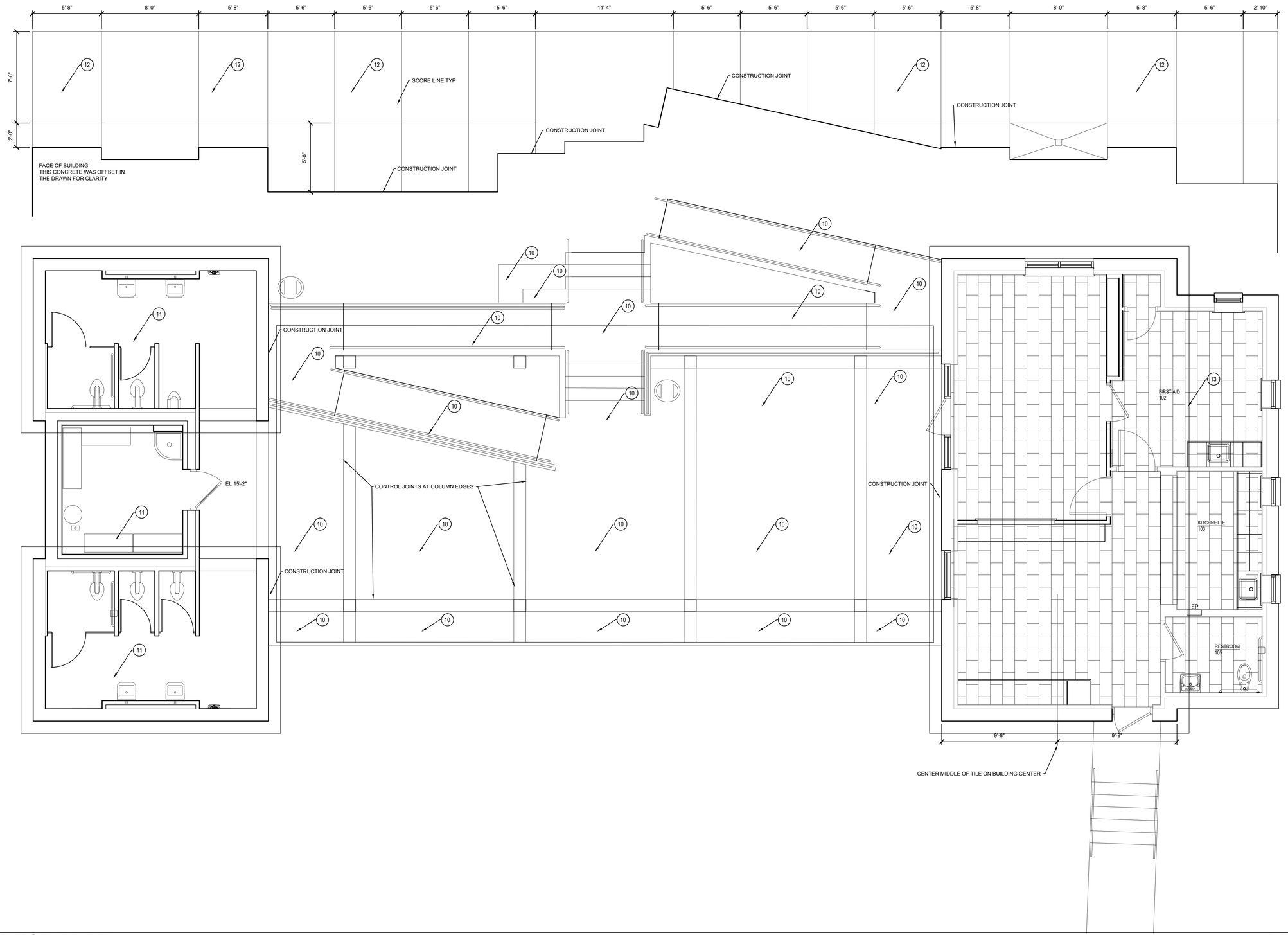

FLOOR FINISH PLAN

1/4" = 1'-0" | 1

GALVESTON COUNTY
BEACH PAVILION
CRYSTAL BEACH, TX 77650

BE–Arc LLC Project No : C–17–003.01

easterwood ARCHITECTS STUDIO
2328 BALL STREET
GALVESTON TEXAS 77550
409-354-8976
EASTERWOOD@BE-ARC.COM

DATE	REVISION

BID SET

DATE ISSUED: 08/10/2018

COPYRIGHT 2018

A1.5

FLOOR FINISH PLAN

COUNTY APPROVAL:
SIGNATURE _____ DATE_____

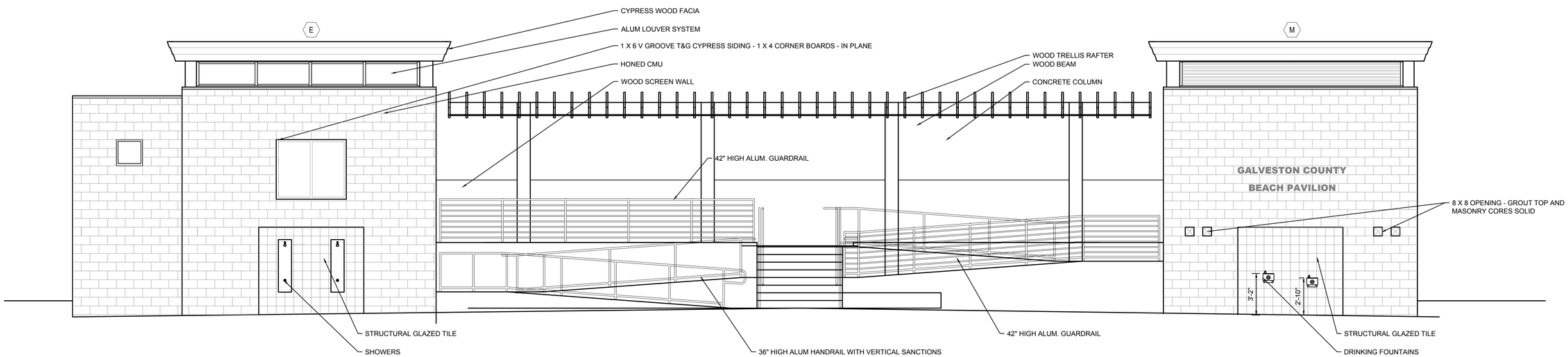

EAST ELEVATION

1/4" = 1'-0" **E**

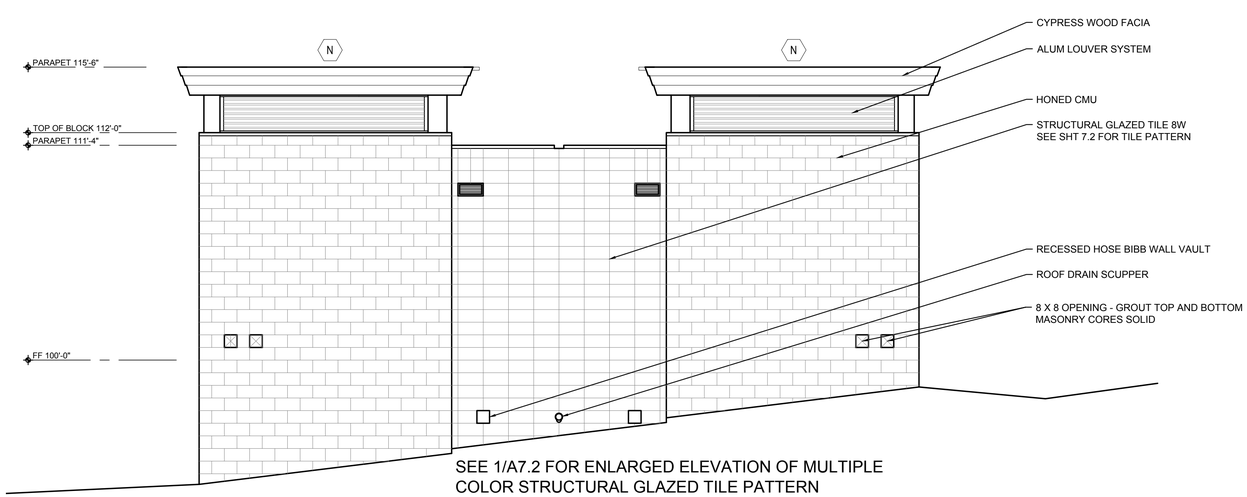

SEE 1/A7.2 FOR ENLARGED ELEVATION OF MULTIPLE
COLOR STRUCTURAL GLAZED TILE PATTERN

NORTH ELEVATION

1/4" = 1'-0" **N**

1 EXTERIOR SIGNAGE
Scale: 1/2" = 1'-0"

GALVESTON COUNTY
BEACH PAVILION
CRYSTAL BEACH, TX 77650

BE–Arc LLC Project No : C–17–003.01

easterwood ARCHITECTS STUDIO
2328 BALL STREET
GALVESTON TEXAS 77550
409-354-8976
EASTERWOOD@BE-ARC.COM

DATE	REVISION

BID SET

DATE ISSUED: 08/10/2018

COPYRIGHT 2018

A2.1

EXTERIOR ELEVATIONS

COUNTY APPROVAL:
SIGNATURE _____ DATE_____

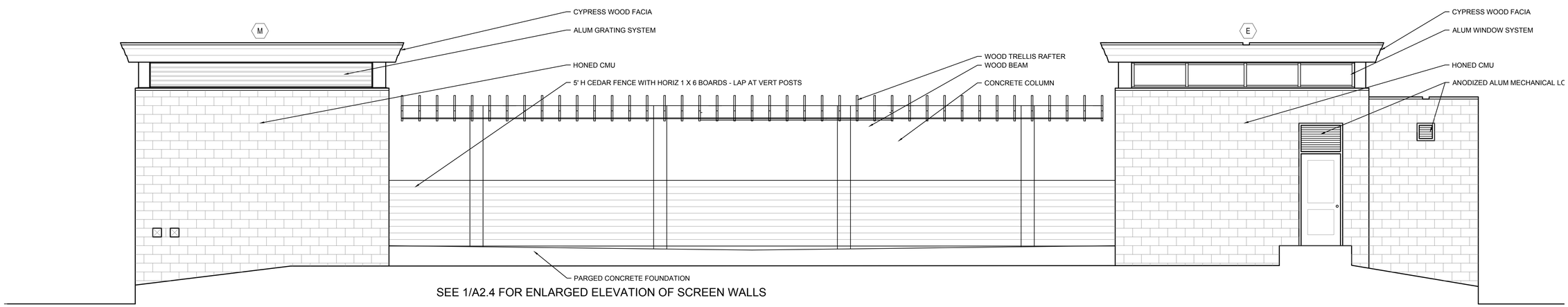

SEE 1/A2.4 FOR ENLARGED ELEVATION OF SCREEN WALLS

WEST ELEVATION 1/4" = 1'-0" | **W**

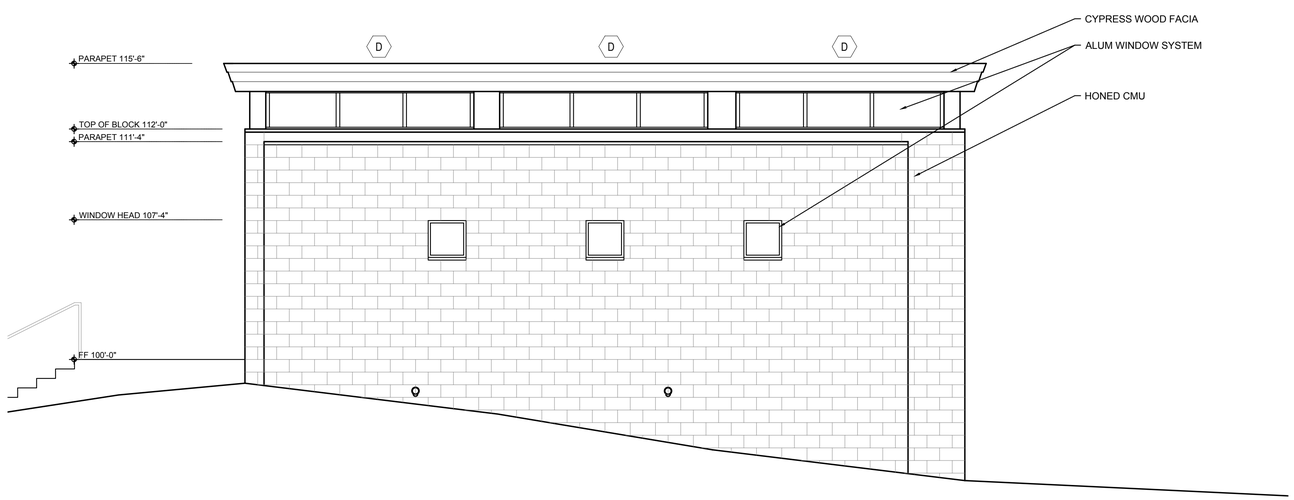

SOUTH ELEVATION 1/4" = 1'-0" | **S**

GALVESTON COUNTY
BEACH PAVILION
CRYSTAL BEACH, TX 77650

BE–Arc LLC Project No : C–17–003.01

eas easterwood ARCHITECTS STUDIO
2328 BALL STREET
GALVESTON TEXAS 77550
409-354-8976
EASTERWOOD@BE-ARC.COM

DATE	REVISION

BID SET

DATE ISSUED: 08/10/2018

COPYRIGHT 2018

A2.2

ELEVATIONS

COUNTY APPROVAL:
SIGNATURE _____ DATE_____

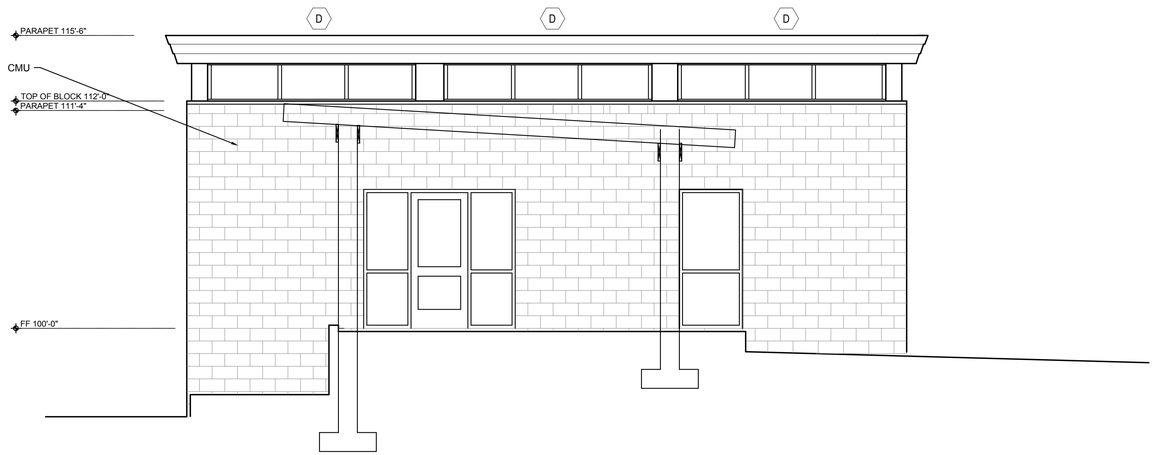

NORTH ELEVATION OF VISTOR'S CENTER 1/4" = 1'-0" | **2**

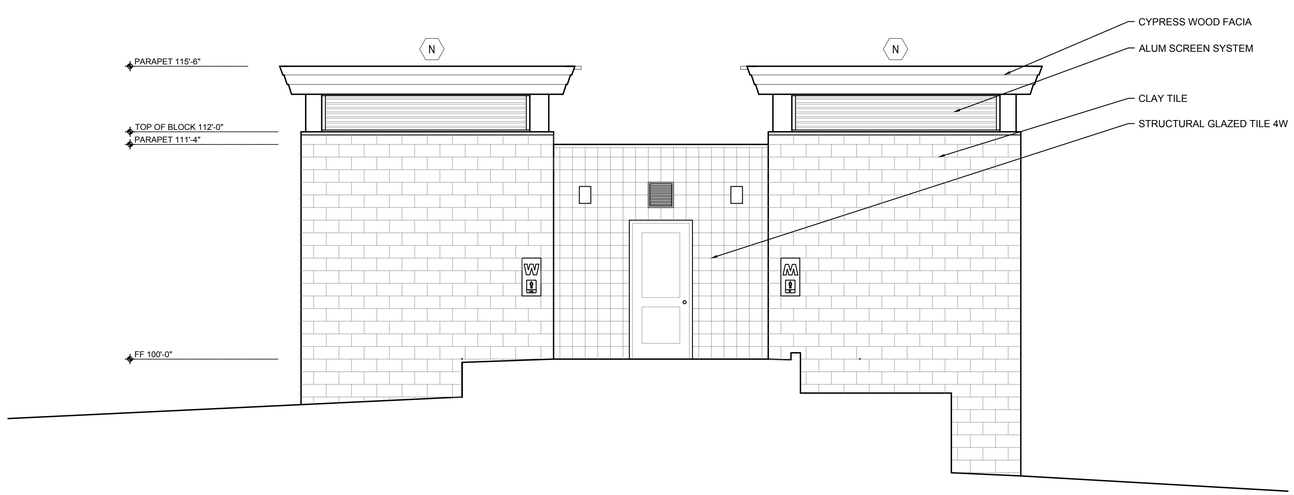

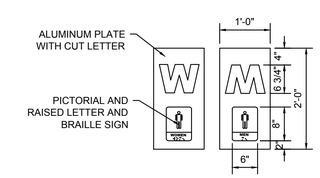

- ALUMINIUM PLATE SIGNAGE
Scale: 3/4" = 1'-0"

SOUTH ELEVATION OF RESTROOM 1/4" = 1'-0" | **1**

GALVESTON COUNTY
BEACH PAVILION
CRYSTAL BEACH, TX 77650

BE–Arc LLC Project No : C–17–003.01

easterwood ARCHITECTS STUDIO
2328 BALL STREET
GALVESTON TEXAS 77550
409-354-8976
EASTERWOOD@BE-ARC.COM

DATE	REVISION

BID SET

DATE ISSUED: 08/10/2018

COPYRIGHT 2018

A2.3

ELEVATIONS

COUNTY APPROVAL:
SIGNATURE _____ DATE_____

1/4" = 1'-0"

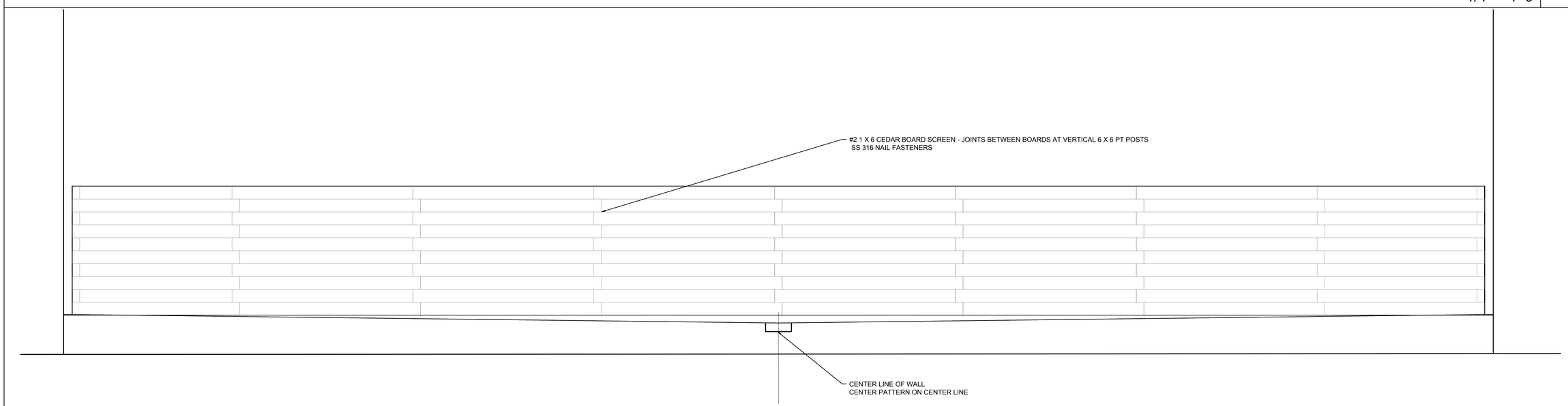

ELEVATION OF SCREEN WALL 1/2" = 1'-0" **1**

GALVESTON COUNTY
BEACH PAVILION
CRYSTAL BEACH, TX 77650

BE–Arc LLC Project No : C–17–003.01

eas easterwood ARCHITECTS STUDIO
2328 BALL STREET
GALVESTON TEXAS 77550
409-354-8976
EASTERWOOD@BE-ARC.COM

DATE	REVISION

BID SET

DATE ISSUED: 08/10/2018

COPYRIGHT 2018

A2.4

ELEVATIONS

COUNTY APPROVAL:
SIGNATURE _____ DATE_____

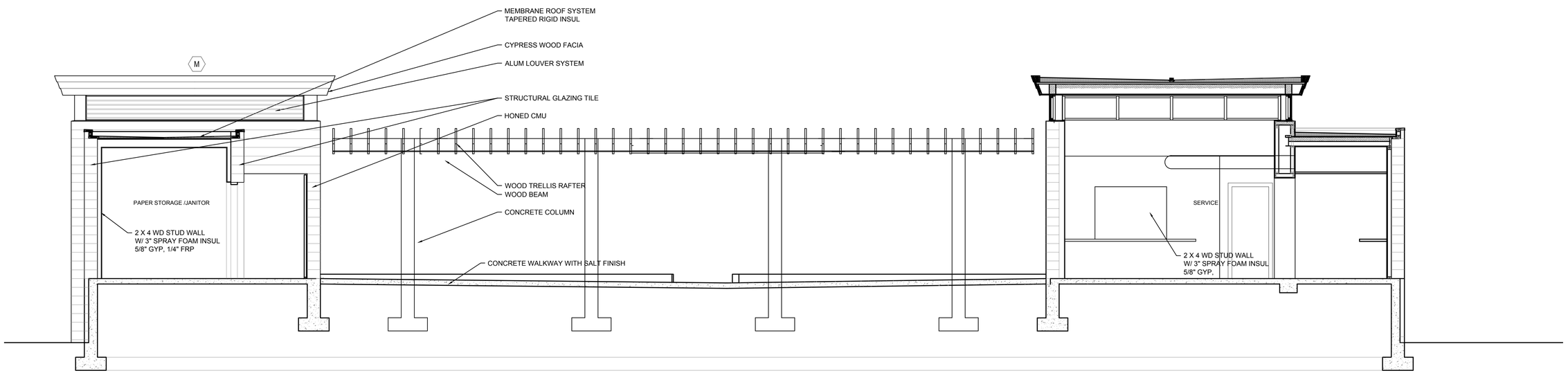

BUILDING SECTION

1/4" = 1'-0" | **B**

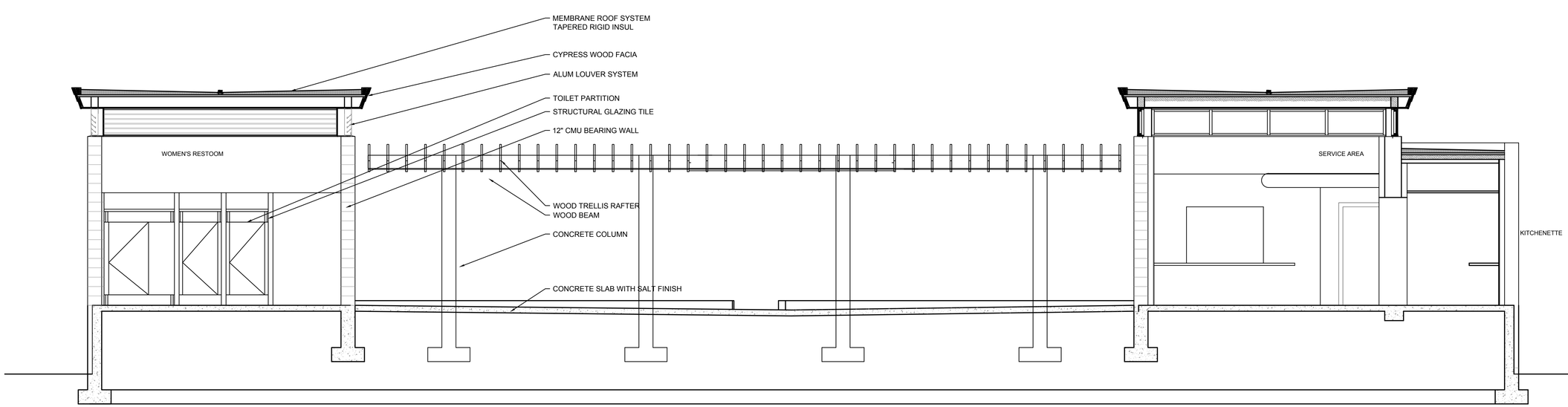

BUILDING SECTION

1/4" = 1'-0" | **A**

GALVESTON COUNTY
BEACH PAVILION
CRYSTAL BEACH, TX 77650

BE–Arc LLC Project No : C–17–003.01

eas easterwood ARCHITECTS STUDIO
2328 BALL STREET
GALVESTON TEXAS 77550
409-354-8976
EASTERWOOD@BE-ARC.COM

DATE	REVISION

BID SET

DATE ISSUED: 08/10/2018

COPYRIGHT 2018

A3.1

BUILDING SECTIONS

COUNTY APPROVAL:
SIGNATURE _____ DATE_____

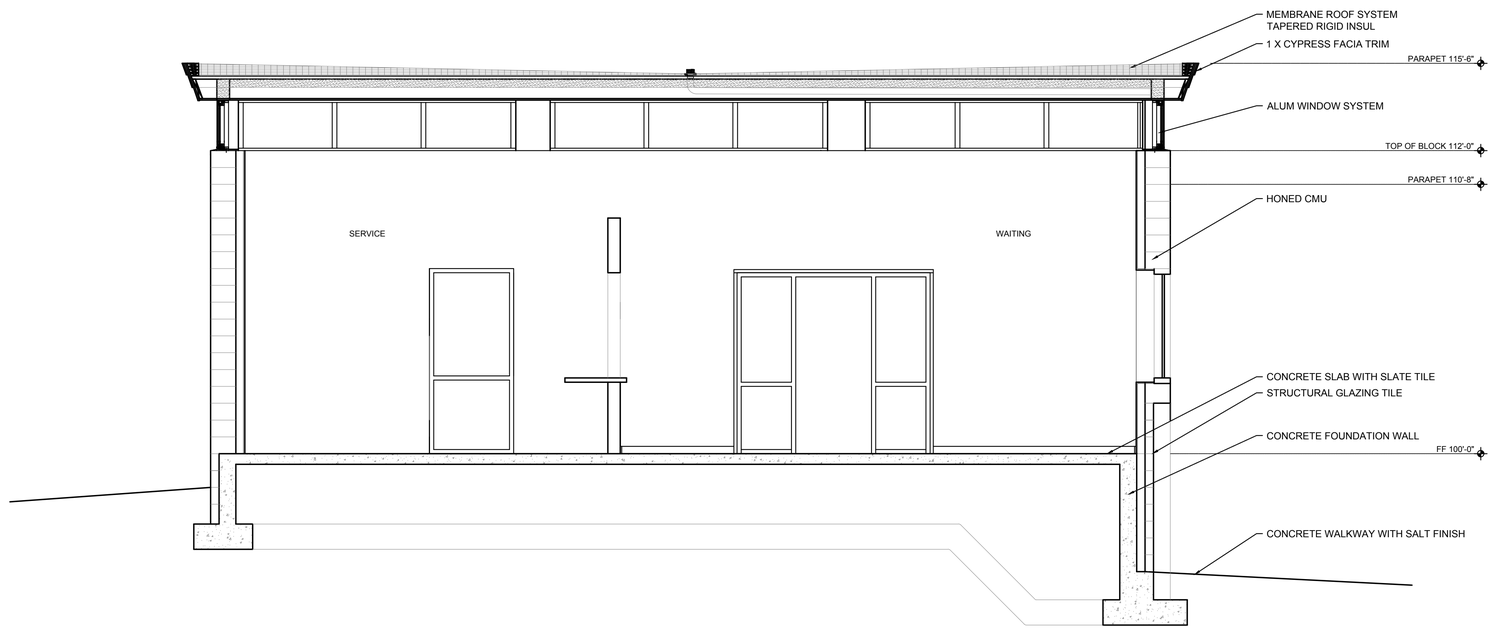

BUILDING SECTION 3/8" = 1'-0" **D**

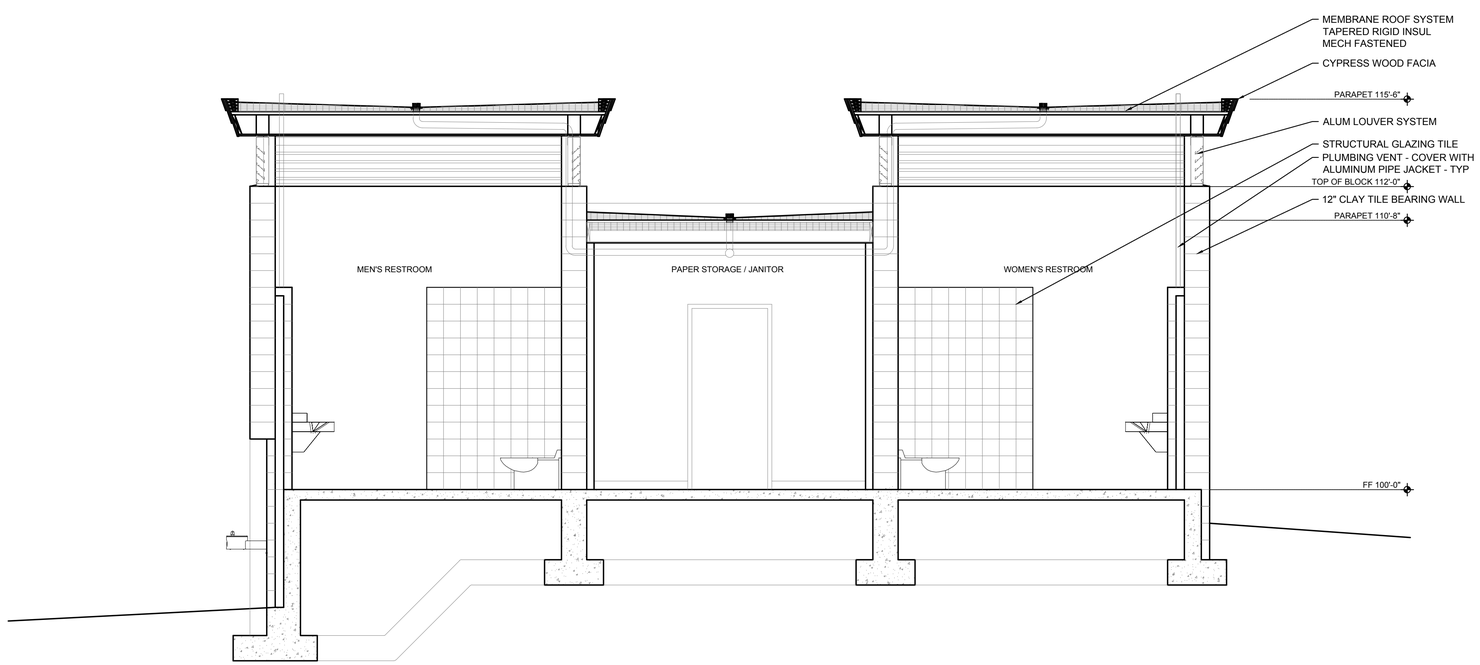

BUILDING SECTION 3/8" = 1'-0" **C**

GALVESTON COUNTY
BEACH PAVILION
CRYSTAL BEACH, TX 77650

BE–Arc LLC Project No : C–17–003.01

easterwood ARCHITECTS STUDIO
2328 BALL STREET
GALVESTON TEXAS 77550
409-354-8976
EASTERWOOD@BE-ARC.COM

DATE	REVISION

BID SET

DATE ISSUED: 08/10/2018

COPYRIGHT 2018

A3.2

BUILDING SECTIONS

COUNTY APPROVAL:
SIGNATURE _____ DATE_____

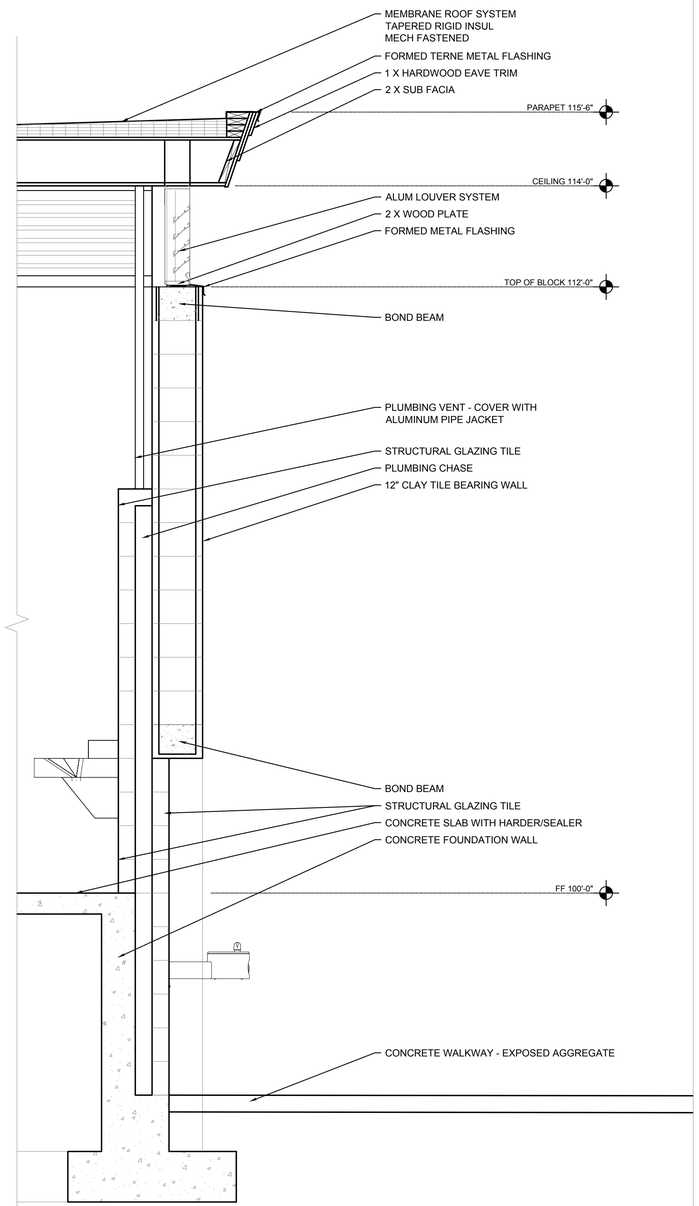

WALL SECTION 3/4" = 1'-0" **3**

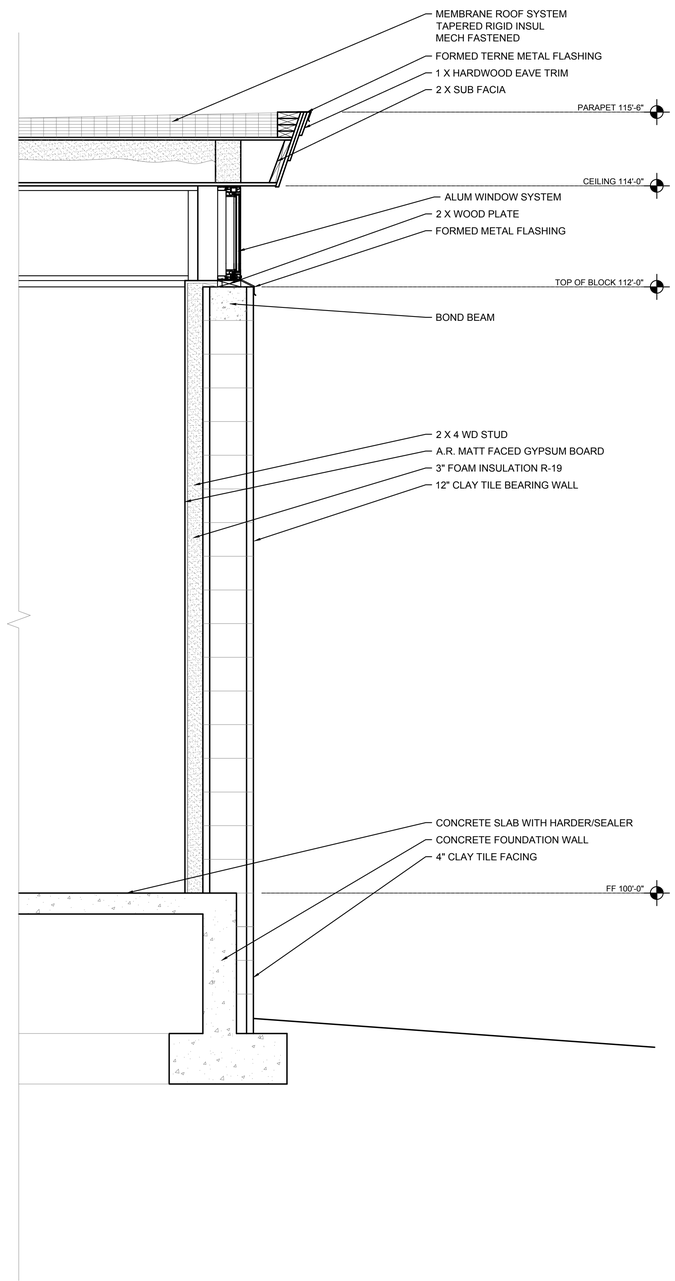

WALL SECTION 3/4" = 1'-0" **2**

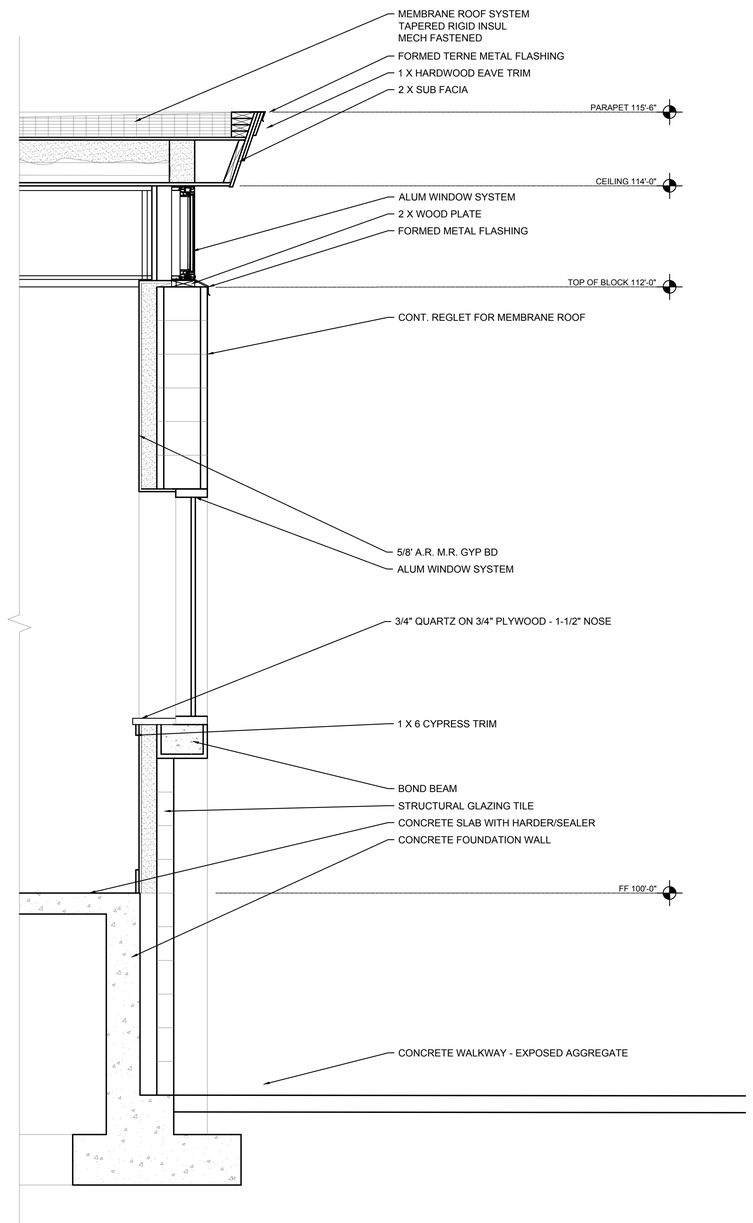

WALL SECTION 3/4" = 1'-0" **1**

GALVESTON COUNTY
BEACH PAVILION
CRYSTAL BEACH, TX 77650

BE–Arc LLC Project No : C–17–003.01

eas easterwood ARCHITECTS STUDIO
2328 BALL STREET
GALVESTON TEXAS 77550
409-354-8976
EASTERWOOD@BE-ARC.COM

DATE	REVISION

BID SET

DATE ISSUED: 08/10/2018

COPYRIGHT 2018

A3.3

WALL SECTIONS

COUNTY APPROVAL:
SIGNATURE _____ DATE_____

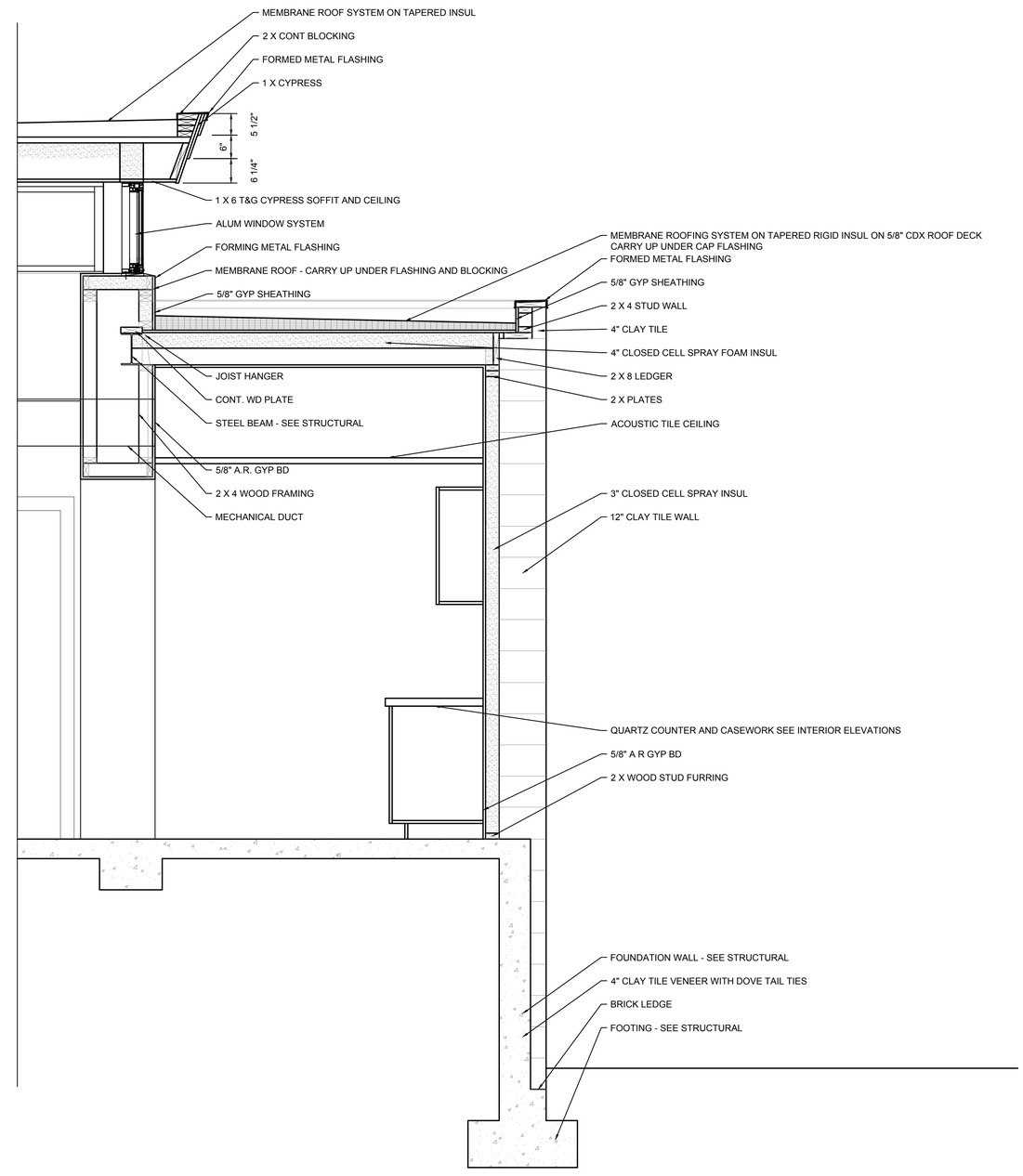

GALVESTON COUNTY
BEACH PAVILION
CRYSTAL BEACH, TX 77650

BE–Arc LLC Project No : C–17–003.01

easterwood ARCHITECTS STUDIO
2328 BALL STREET
GALVESTON TEXAS 77550
409-354-8976
EASTERWOOD@BE-ARC.COM

DATE	REVISION

BID SET

DATE ISSUED: 08/10/2018

COPYRIGHT 2018

A3.4

WALL SECTIONS

-	3/4" = 1'-0"	3	-	3/4" = 1'-0"	2	**WALL SECTION**	3/4" = 1'-0"	1

COUNTY APPROVAL:
SIGNATURE _____ DATE_____

ROOM FINISH SCHEDULE

NUMBER	ROOM NAME	WALLS NORTH					WALLS EAST					WALLS SOUTH					WALLS WEST					FLOOR MATERIAL				BASE MATERIAL			CEILING MATERIAL				NOTES:
		PAINTED M.R. GWB	STRUCTURAL GLAZED TILE	CMU	FIBERGLASS REINFORCED PANEL	PAINTED A.R. GWB	PAINTED M.R. GWB	STRUCTURAL GLAZED TILE	CMU	FIBERGLASS REINFORCED PANEL	PAINTED A.R. GWB	PAINTED M.R. GWB	STRUCTURAL GLAZED TILE	CMU	FIBERGLASS REINFORCED PANEL	PAINTED A.R. GWB	PAINTED M.R. GWB	STRUCTURAL GLAZED TILE	CMU	FIBERGLASS REINFORCED PANEL	PAINTED A.R. GWB	SEALED CONCRETE	SLATE	-	-	SEALED WOOD - CYPRESS	RUBBER	NONE	A.R. GWB	1 X 4 CYPRESS T & G WOOD	M.R. GYP ON CEILING	ACT	
101	WAITING					X					X					X					X		X			X				X			
102	FIRST AID					X					X					X					X		X			X						X	
103	KITCHENETTE					X					X					X					X		X			X						X	
104	SERVICE					X					X					X					X		X			X				X			
105	RESTROOM	X					X					X					X						X			X					X		
110	MEN'S RESTROOM		X	X				X	X					X				X	X			X						X		X			
111	PAPER STORAGE/ JANITOR				X					X					X					X		X					X				X		
112	WOMEN'S RESTROOM		X	X				X	X					X				X	X			X						X		X			

Door Schedule

	Room	Door Rating	Door Elevation	Door Width	Door Height	Door Thickness	Door Material	Frame Elevation	Frame Material	Details Head	Details Jamb	Details Sill	Notes
101A	FIRST AID		A	3'-0"	7'-0"	1-3/4"	WD	A	AL	1	2	11	
101B	FIRST AID		A	3'-0"	7'-0"	1-3/4"	WD	A	AL	1	2	11	
101C	FIRST AID		A	3'-0"	7'-0"	1-3/4"	WD	A	AL	1	2	11	
103A	SERVICE		A	3'-0"	7'-0"	1-3/4"	WD	A	AL	1	2	11	
105A	RESTROOM		A	3'-0"	7'-0"	1-3/4"	WD	A	AL	1	2	11	
X1	WAITING		B	3'-0"	7'-2"	1-3/4"	AL		AL	3 SIM	3	10	SEE WINDOW ELEV P FOR FRAME DIMS
X2	SERVICE EAST		D	3'-0"	7'-0"	1-3/4"	AL	B	AL	8 SIM	7	10	
X3	PAPER STORAGE		C	3'-0"	7'-2"	1-3/4"	AL	C	AL	8	6	10	

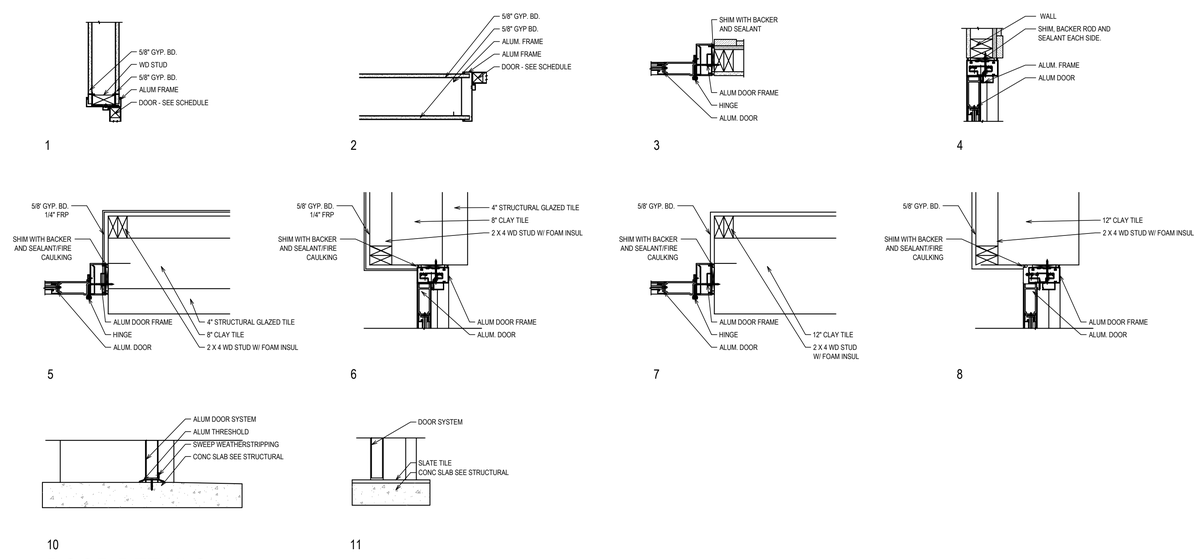

DOOR DETAILS

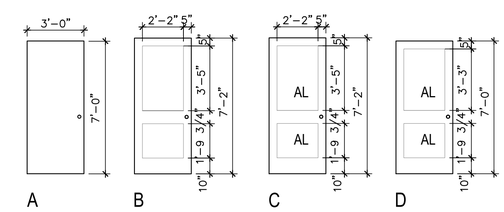

DOOR ELEVATIONS

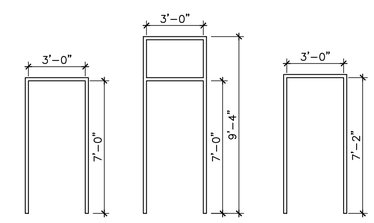

FRAME ELEVATIONS

GALVESTON COUNTY
BEACH PAVILION
CRYSTAL BEACH, TX 77650

BE-Arc LLC Project No : C-17-003.01

easterwood ARCHITECTS STUDIO
409-354-8976
EASTERWOOD@BE-ARC.COM
2328 BALL STREET
GALVESTON TEXAS 77550

DATE	REVISION

BID SET

DATE ISSUED: 08/10/2018

COPYRIGHT 2018

A6.1

WINDOW SCHEDULE

EXTERIOR						
TYPE	HEIGHT	WIDTH	MATERIAL	DETAIL	SILL HEIGHT	NOTES
A	4'-6"	5'-4"	AL	2/3/4	2'-10" AB 100'	
B	1'-11"	1'-11"	AL	2/3/4 SIM.	5'-4-1/2" AB 100'	
C	7'-4"	3'-4"	AL	2/3/4	0'-4" AB 100'	
D	1'-11"	11'-8"	AL	2/3/4 SIM.	12'-0 5/8" AB 100'	
E	1'-11"	17'-8"	AL	2/3/4	12'-0 5/8" AB 100'	
M	1'-11"	17'-8"	AL	2/3/4 SIM.	12'-0 5/8" AB 100'	ALUM SCREEN LOUVER
N	1'-11"	11'-8"	AL	2/3/4	12'-0 5/8" AB 100'	ALUM SCREEN LOUVER
P	7'-2"	5'-4"	AL	2/3/4	0" AB 100'	

COUNTY APPROVAL:
SIGNATURE _____ DATE_____

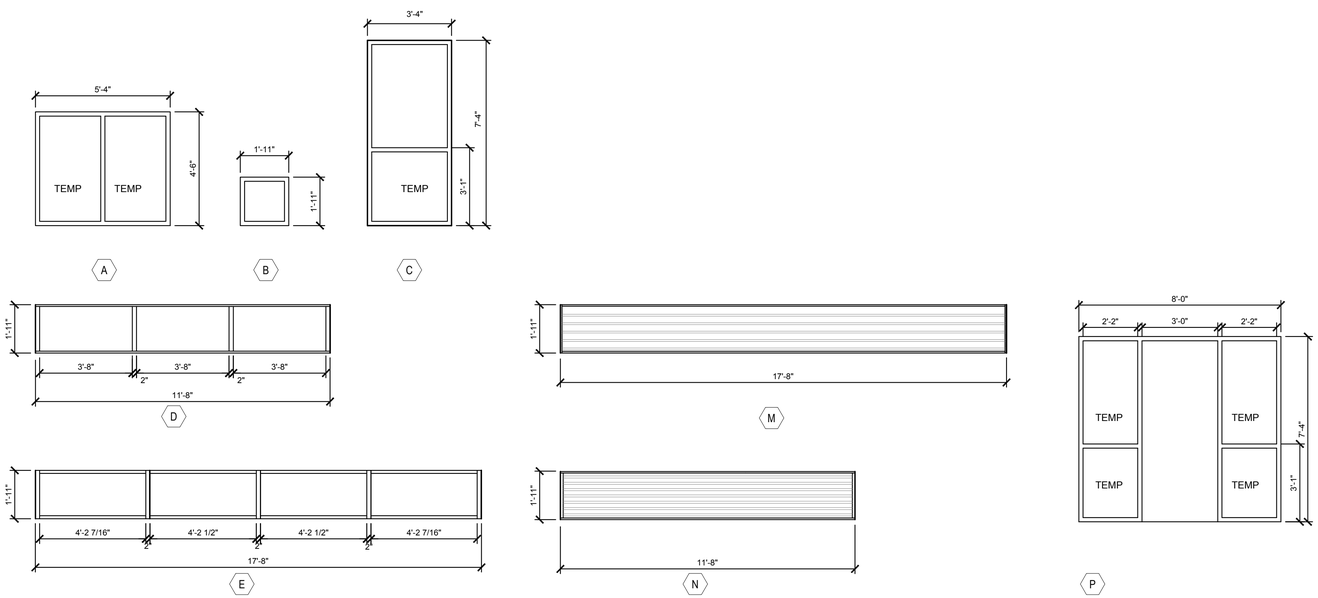

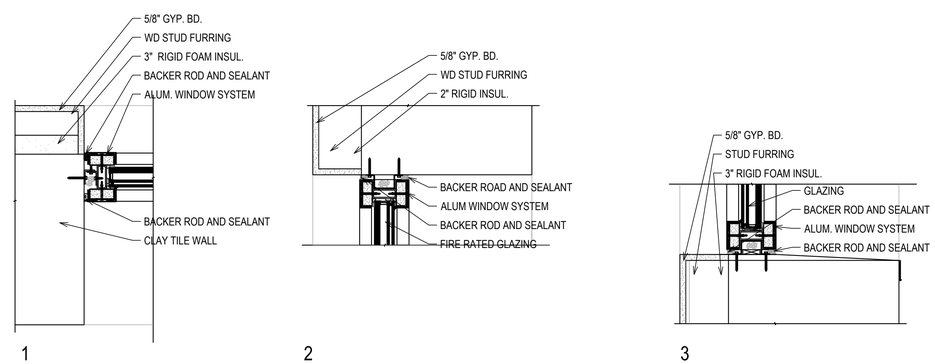

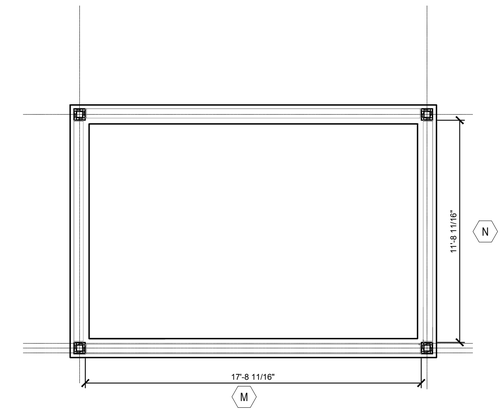

1 UPPER PLAN RESTROOM PAVILLION
Scale: 1/4" = 1'-0"

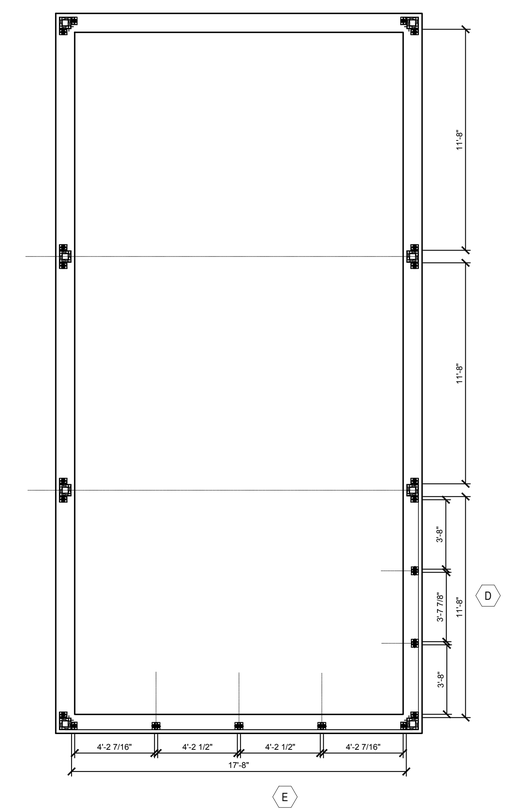

1 UPPER PLAN SERVICE PAVILLION
Scale: 1/4" = 1'-0"

GALVESTON COUNTY
BEACH PAVILION
CRYSTAL BEACH, TX 77650

BE–Arc LLC Project No : C–17–003.01

eas easterwood ARCHITECTS STUDIO
2328 BALL STREET
GALVESTON TEXAS 77550
409-354-8976
EASTERWOOD@BE-ARC.COM

DATE	REVISION

BID SET

DATE ISSUED: 08/10/2018

COPYRIGHT 2018

A6.2

WINDOW SCHEDULE - ENLARGED PLAN, ELEVATIONS, AND DETAILS

NTS

COUNTY APPROVAL:
SIGNATURE _____ DATE_____

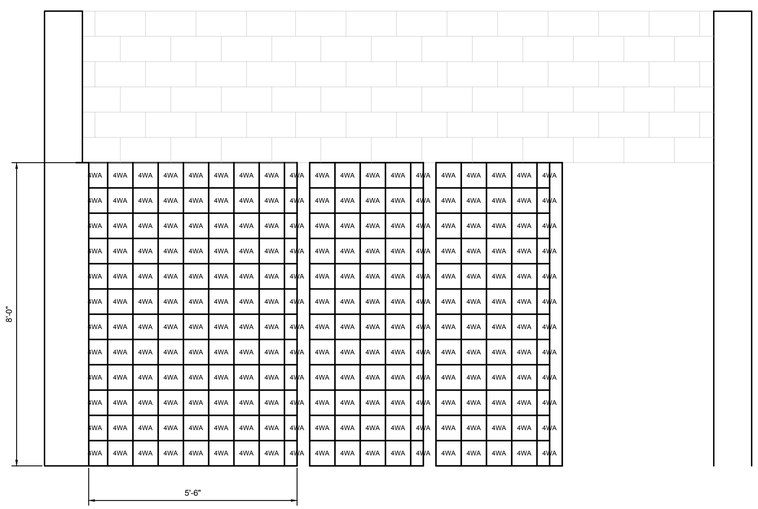

INTERIOR ELEVATIONS 1/2" = 1'-0" **4**

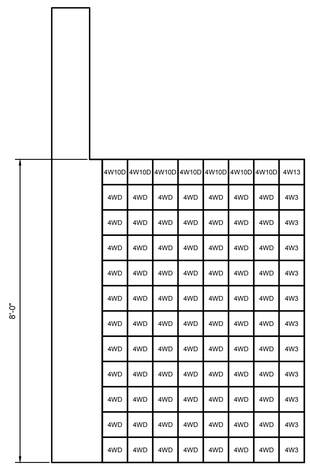

INT ELEVATIONS 1/2" = 1'-0" **5**

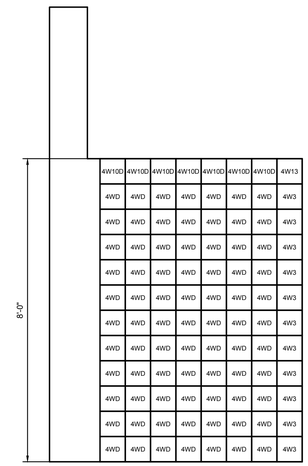

INT ELEVATIONS 1/2" = 1'-0" **6**

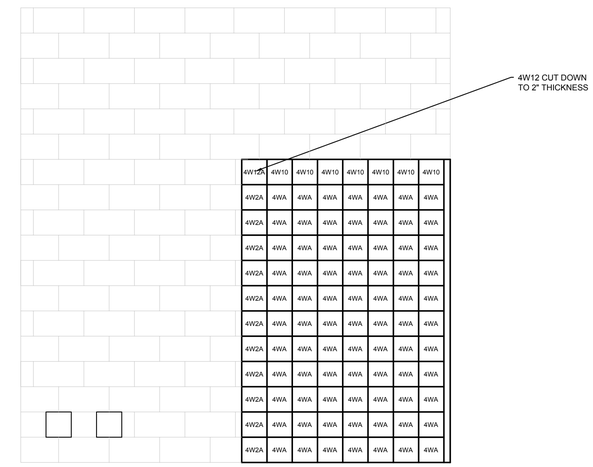

INT ELEVATIONS 1/2" = 1'-0" **7**

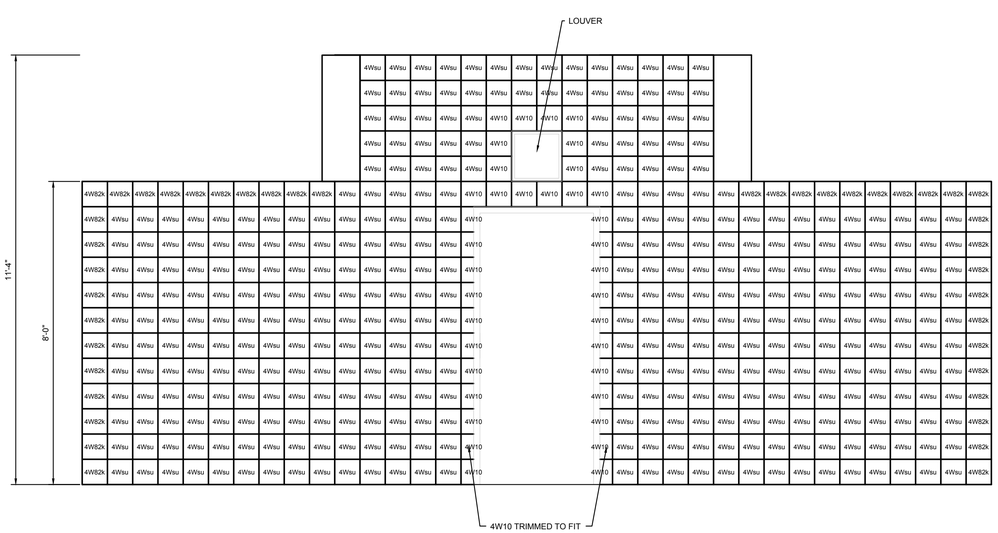

INT ELEV LOOKING NORTH 1/2" = 1'-0" **1**

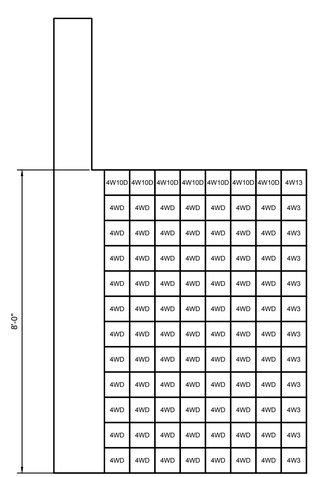

INT ELEV LOOKING SOUTH 1/2" = 1'-0" **2**

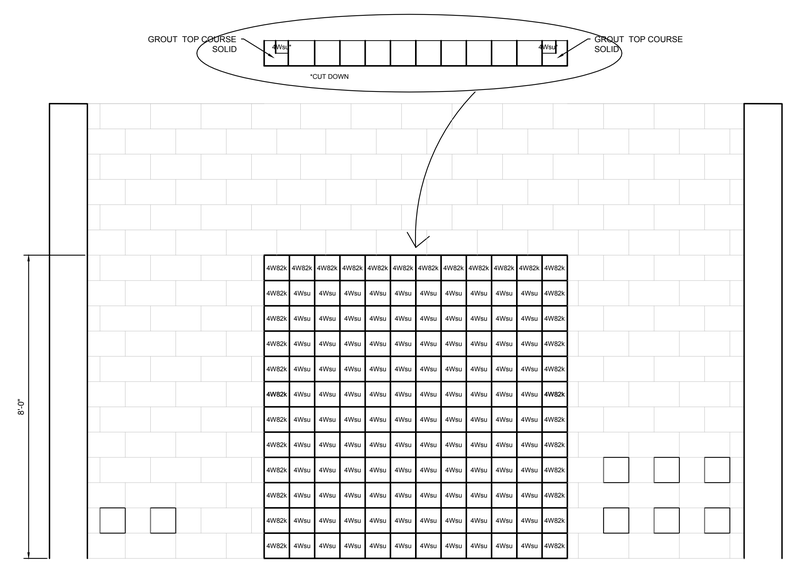

INTERIOR ELEVATIONS 1/2" = 1'-0" **3**

GALVESTON COUNTY
BEACH PAVILION
CRYSTAL BEACH, TX 77650

BE–Arc LLC Project No : C–17–003.01

easterwood ARCHITECTS STUDIO
409-354-8976
EASTERWOOD@BE-ARC.COM
2328 BALL STREET
GALVESTON TEXAS 77550

DATE	REVISION

BID SET

DATE ISSUED: 08/10/2018

COPYRIGHT 2018

A7.1

INTERIOR ELEVATIONS

COUNTY APPROVAL:
SIGNATURE _____ DATE_____

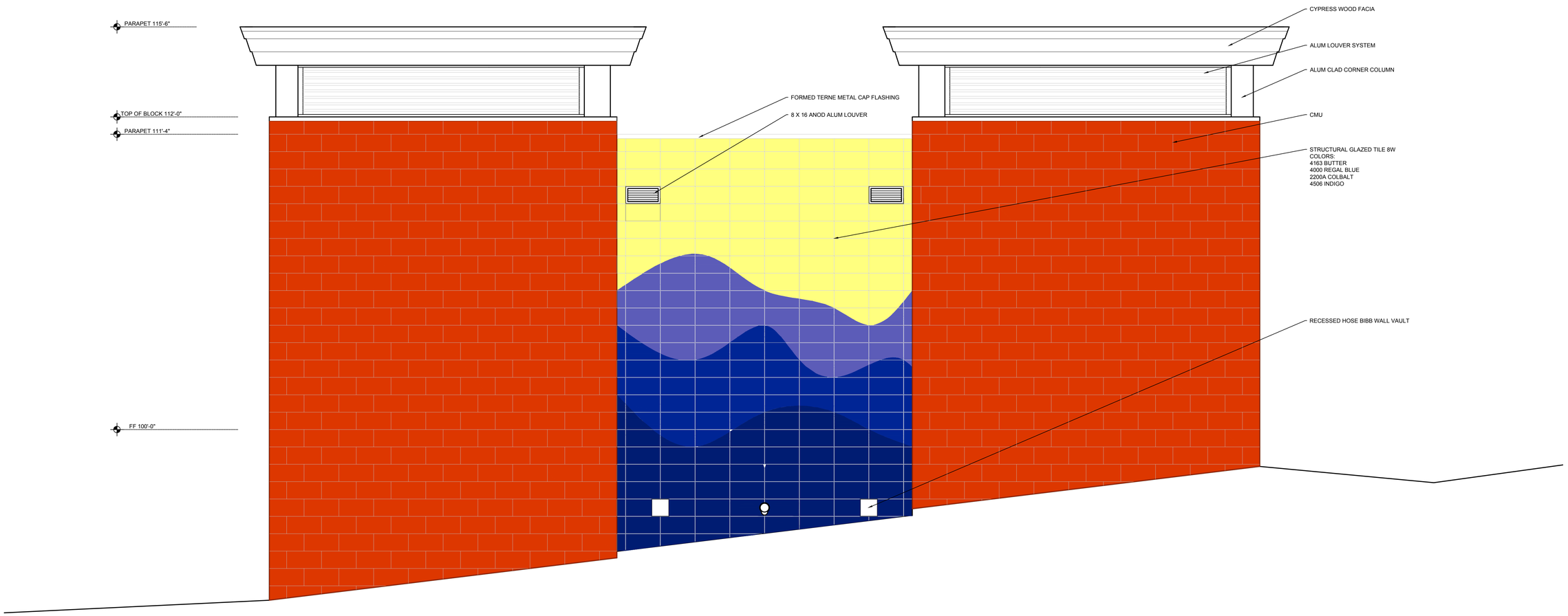

ENLARGED NORTH ELEVATION 1/2" = 1'-0" | **1**

GALVESTON COUNTY
BEACH PAVILION
CRYSTAL BEACH, TX 77650

BE–Arc LLC Project No : C–17–003.01

eas easterwood ARCHITECTS STUDIO
2328 BALL STREET
GALVESTON TEXAS 77550
409-354-8976
EASTERWOOD@BE-ARC.COM

DATE	REVISION

BID SET

DATE ISSUED: 08/10/2018

COPYRIGHT 2018

A7.2

ENLARGED ELEVATION

COUNTY APPROVAL:
SIGNATURE _____ DATE_____

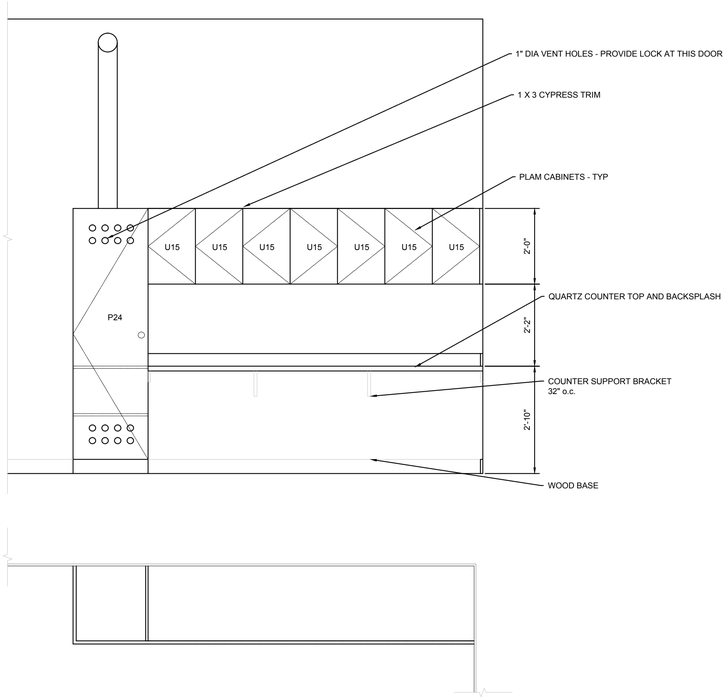

CASEWORK - SERVICE 104 1/2" = 1'-0" **5**

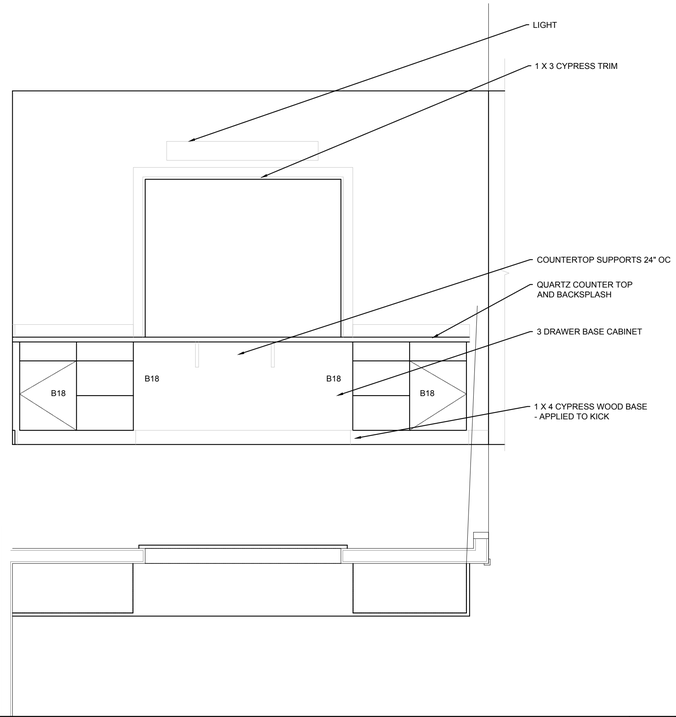

SERVICE COUNTER - SERVICE 104 1/2" = 1'-0" **4**

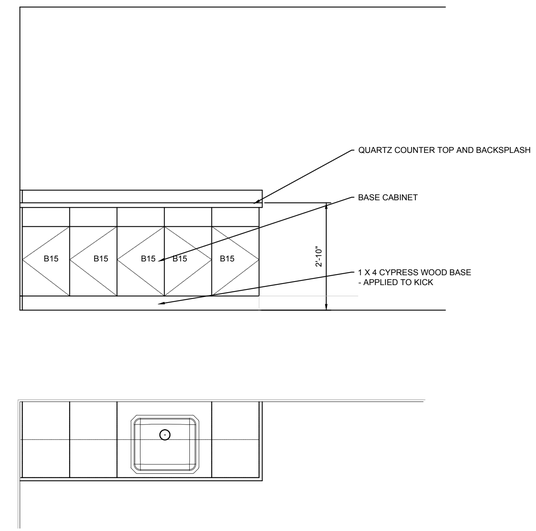

CASEWORK - FIRST AID 101 1/2" = 1'-0" **3**

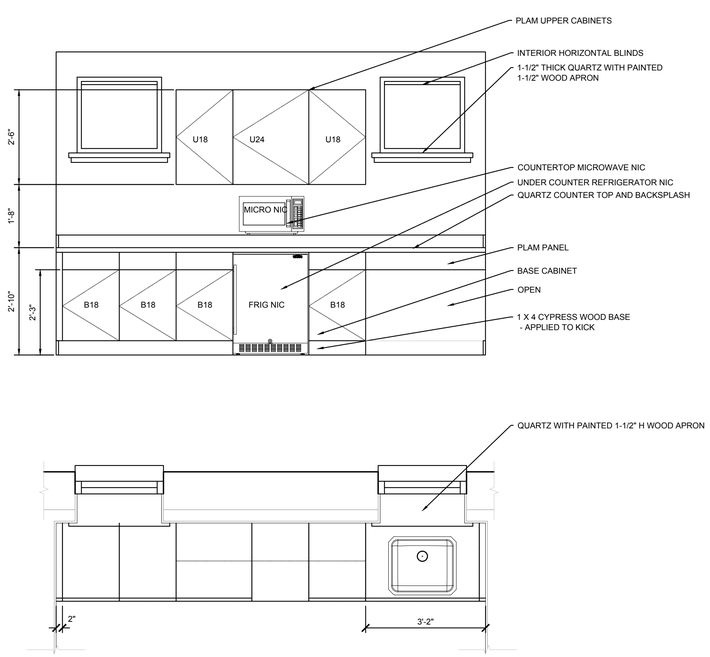

CASEWORK - KITCHENETTE 103 1/2" = 1'-0" **2**

- 1/2" = 1'-0" **1**

GALVESTON COUNTY
BEACH PAVILION
CRYSTAL BEACH, TX 77650

BE–Arc LLC Project No : C–17–003.01

eas easterwood ARCHITECTS STUDIO
2328 BALL STREET
GALVESTON TEXAS 77550
409-354-8976
EASTERWOOD@BE-ARC.COM

DATE	REVISION

BID SET

DATE ISSUED: 08/10/2018

COPYRIGHT 2018

A7.3

CASEWORK

INTERIOR ELEVATIONS

COUNTY APPROVAL:
SIGNATURE _____ DATE_____

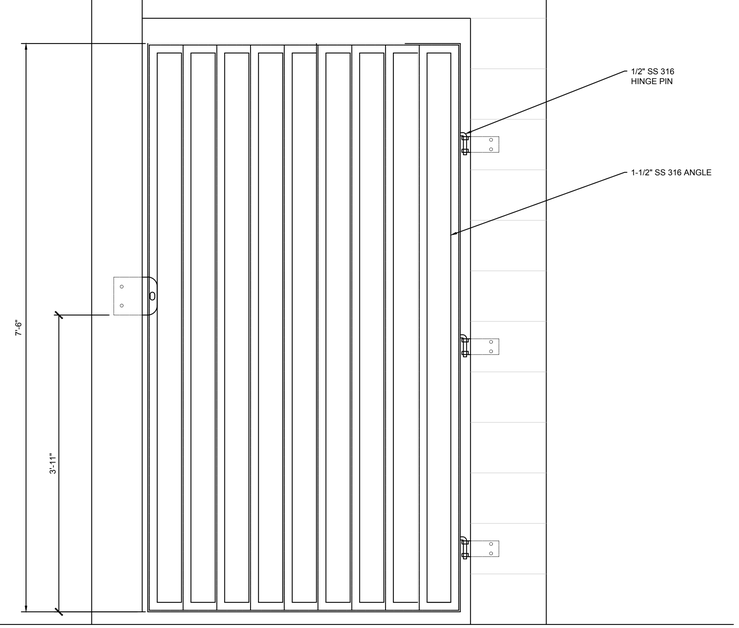

GATE ELEVATION 1" = 1'-0" **C**

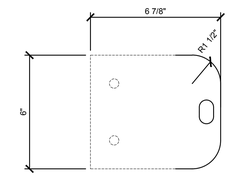

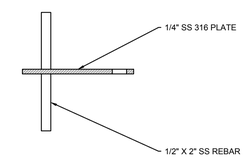

HASP PLATE ANCHOR 3" = 1'-0" **C**

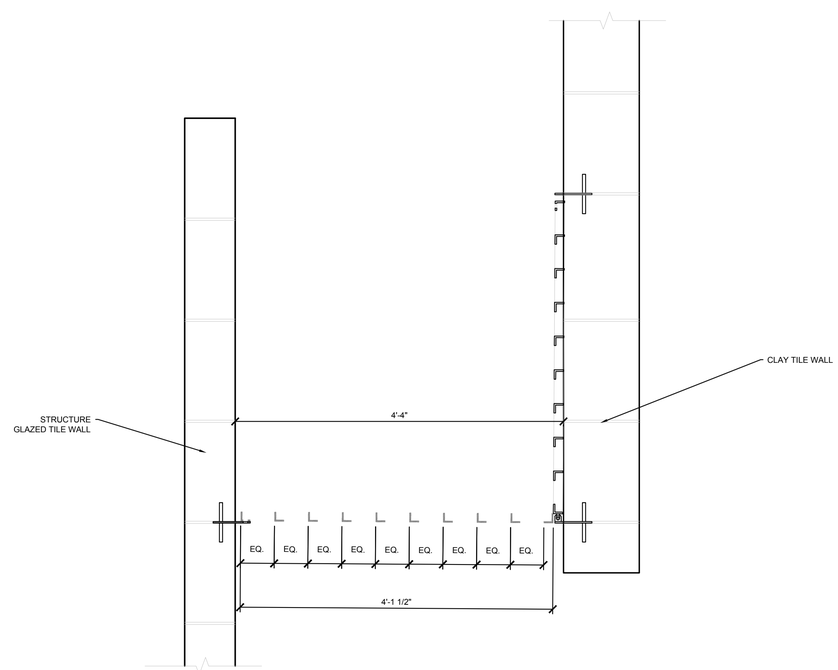

RESTROOM GATE PLAN 1" = 1'-0" **C**

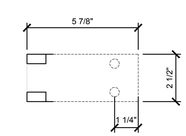

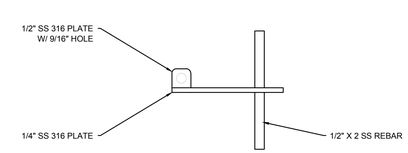

HINGE PLATE ANCHOR 3" = 1'-0" **D**

GALVESTON COUNTY
BEACH PAVILION
CRYSTAL BEACH, TX 77650

BE–Arc LLC Project No : C–17–003.01

eas easterwood ARCHITECTS STUDIO
2328 BALL STREET
GALVESTON TEXAS 77550
409-354-8976
EASTERWOOD@BE-ARC.COM

DATE	REVISION

BID SET

DATE ISSUED: 08/10/2018

COPYRIGHT 2018

A7.4

MISC METALS

LEGEND

GB36—36" GRAB BAR	SD—SOAP DISPENSER
GB48—48" GRAB BAR	TPH—TOILET PAPER HOLDER - JUMBO
MR1—MIRROR 18" X 36" SS	TPH—TOILET PAPER HOLDER
MR2—MIRROR 18" X 36	SND—SANITARY NAPKIN DISPOSAL
DRY—HAND DRYER	PTD—PAPER TOWEL DISPENSER

COUNTY APPROVAL:
SIGNATURE _____ DATE_____

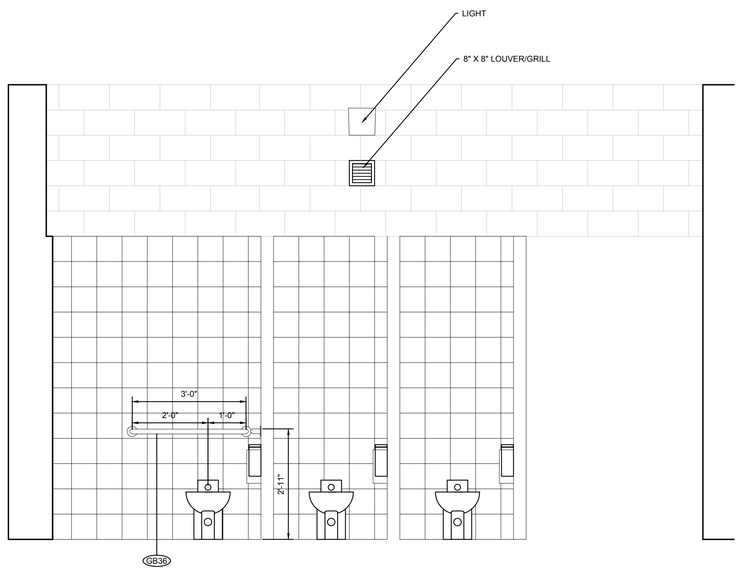

INTERIOR ELEVATIONS 1/2" = 1'-0" **4**

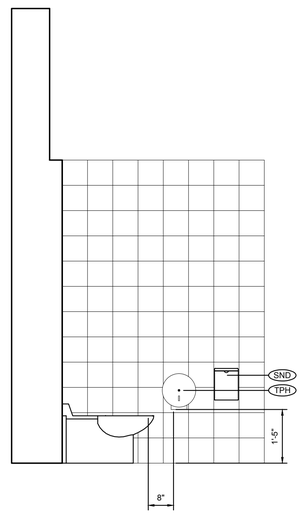

INT ELEV 1/2" = 1'-0" **5**

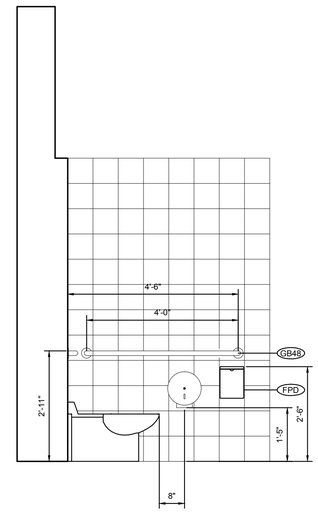

INT ELEV 1/2" = 1'-0" **6**

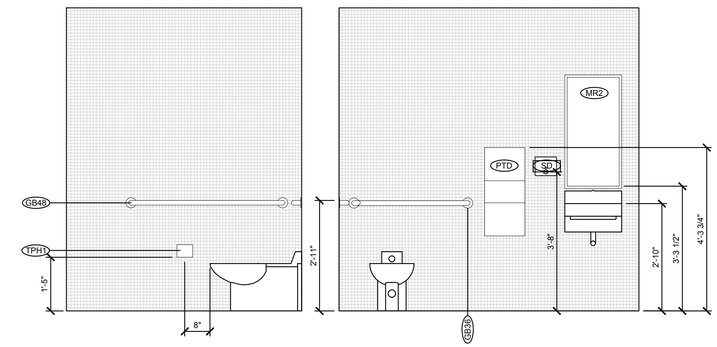

RESTROOM 105 ELEVATION 1/2" = 1'-0" **7**

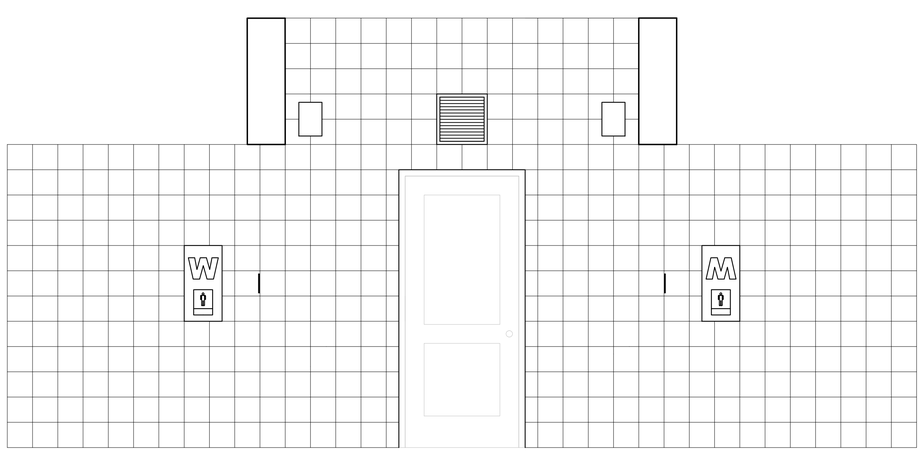

INT ELEV LOOKING NORTH 1/2" = 1'-0" **1**

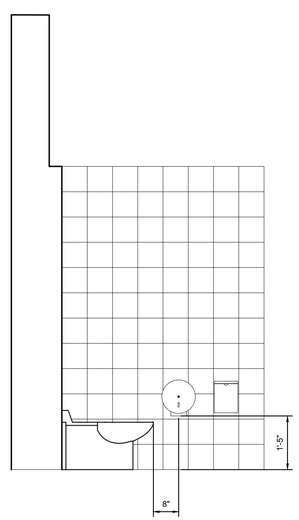

INT ELEV LOOKING SOUTH 1/2" = 1'-0" **2**

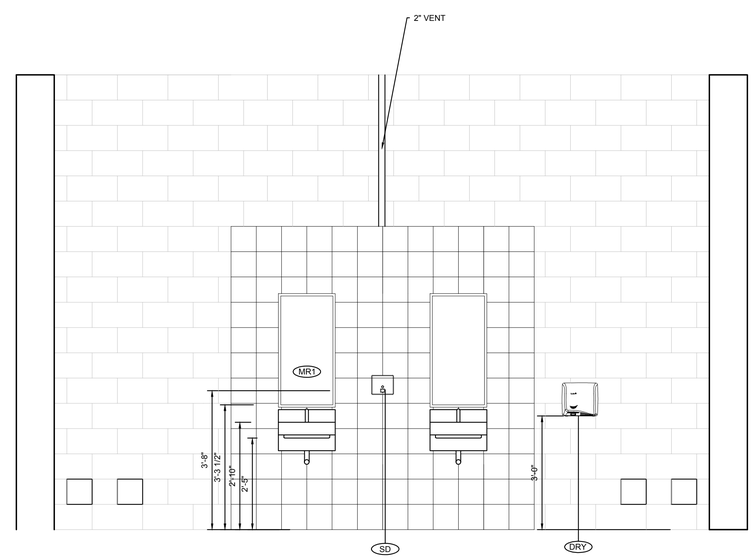

INTERIOR ELEVATIONS 1/2" = 1'-0" **3**

GALVESTON COUNTY
BEACH PAVILION
CRYSTAL BEACH, TX 77650

BE–Arc LLC Project No : C–17–003.01

easterwood ARCHITECTS STUDIO
2328 BALL STREET
GALVESTON TEXAS 77550
409-354-8976
EASTERWOOD@BE-ARC.COM

DATE	REVISION

BID SET

DATE ISSUED: 08/10/2018

COPYRIGHT 2018

A7.5

INTERIOR ELEVATIONS

COUNTY APPROVAL:
SIGNATURE _____ DATE_____

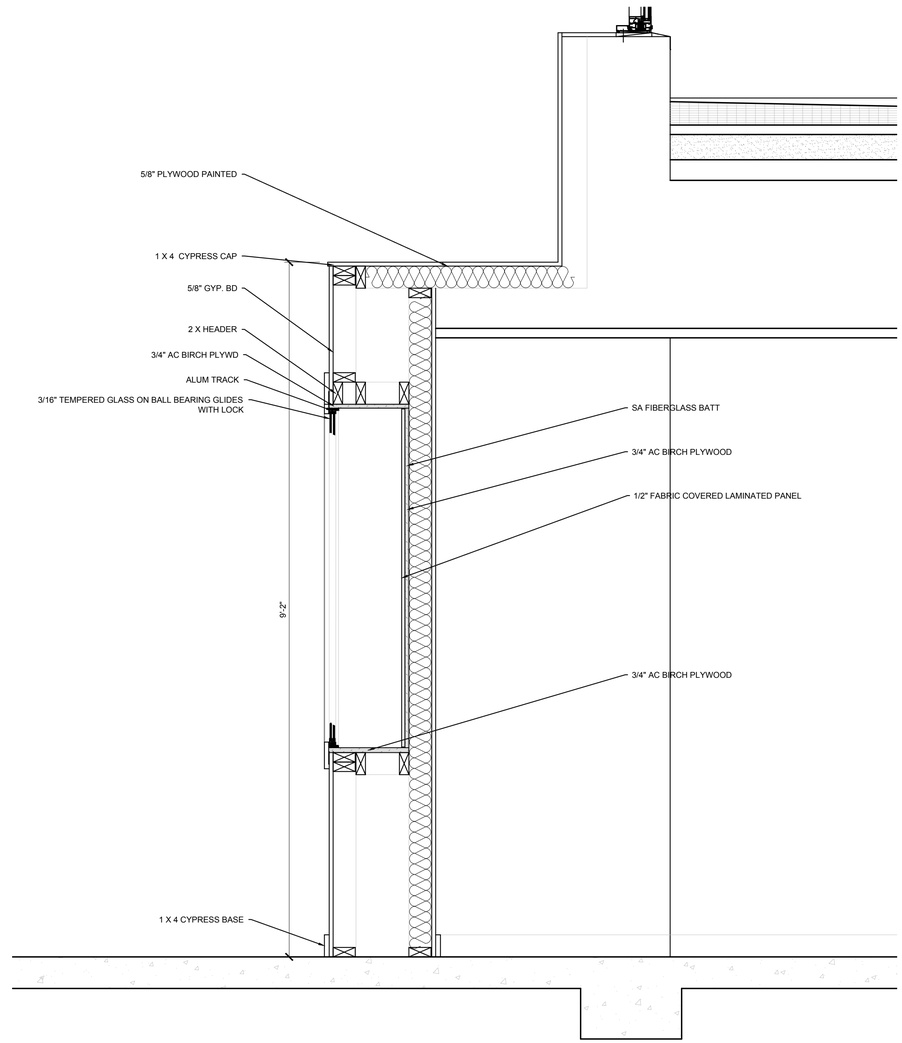

- 1" = 1'-0" | 2 **WALL SECTION THRU SOUTH DISPLAY CABINET** 1" = 1'-0" | 3

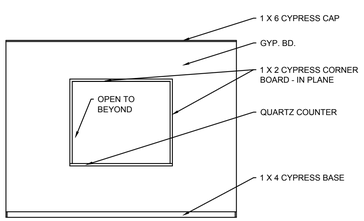

LOOKING WEST

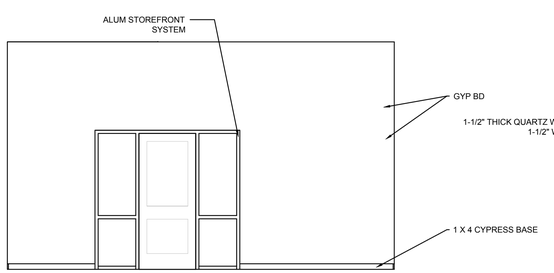

LOOKING NORTH

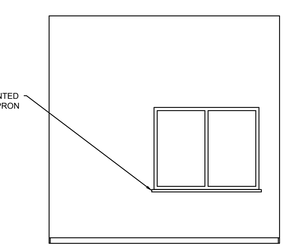

BAY WINDOW ELEVATION LOOKING EAST

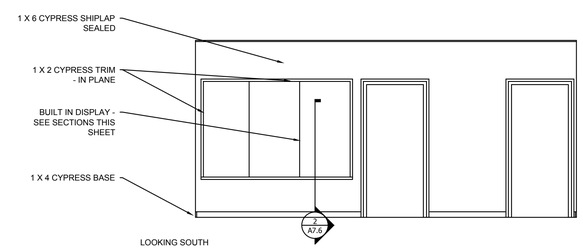

LOOKING SOUTH

INT ELEVATION - WAITING 101 1/4" = 1'-0" | 1

GALVESTON COUNTY
BEACH PAVILION
CRYSTAL BEACH, TX 77650

BE–Arc LLC Project No : C–17–003.01

eas easterwood ARCHITECTS STUDIO
409-354-8976
EASTERWOOD@BE-ARC.COM
2328 BALL STREET
GALVESTON TEXAS 77550

DATE	REVISION

BID SET

DATE ISSUED: 08/10/2018

COPYRIGHT 2018

A7.6

DISPLAY CASE

DESIGN DATA GOVERNING BUILDING CODE: IBC 2009

LIVE LOADS USED IN DESIGN:

1. OFFICES	100 PSF
2. ROOF	20 PSF
3. MECHANICAL/STORAGE	100 PSF

GUARDRAIL AND HANDRAIL

1. TOP RAIL	200 LBS
2. TOP RAIL	50 PLF
3. COMPONENTS	50 PSF

WIND–IBC

1. BASIC WIND SPEED (V 3s)	130 MPH
2. BUILDING CATEGORY	TWO
3. IMPORTANCE FACTOR, I	1.0
4. EXPOSURE CATEGORY	C
5. ENCLOSURE CLASSIFICATION	ENCLOSED (OFFICE) BATHROOMS (PARTIALLY OPEN) OPEN (TRELLIS)

FLOOD LOADS–IBC

1. BASEFLOOD ELEVATION (NGVD 1929)	15.0'
2. DESIGN FLOOD ELEVATION (NGVD 1929)	15.2'
3. FLOOD ZONE	A15

PROJECT NOTES

A. GENERAL:

1. NOTES ON THIS PAGE SUPPLEMENT THE SPECIFICATIONS, REFER TO SPECIFICATIONS FOR ADDITIONAL REQUIREMENTS.
2. ENGINEERS APPROVAL MUST BE SECURED FOR ALL SUBSTITUTIONS.
3. CHECK ALL DIMENSIONS ON STRUCTURAL DRAWINGS AGAINST ARCHITECTURAL DRAWINGS.
4. VERIFY OPENINGS THROUGH FLOORS, ROOFS, AND WALLS WITH ARCHITECTURAL, MECHANICAL, CIVIL AND ELECTRICAL REQUIREMENTS.
5. ANY DISCREPANCY OF INFORMATION DESCRIBED ON THE STRUCTURAL DRAWINGS, SPECIFICATIONS, OR ANY INFORMATION SHOWN ON OTHER DRAWINGS MUST BE BROUGHT TO THE ATTENTION OF THE STRUCTURAL ENGINEER FOR CLARIFICATION AT OR PRIOR TO PRE–BID MEETING.
6. PRE–ENGINEERED SYSTEMS AND COMPONENTS SHALL BE INSTALLED ACCORDING TO THE MANUFACTURER'S RECOMMENDATIONS AND SPECIFICATIONS. SHOP DRAWINGS SHALL BE SUBMITTED TO THE STRUCTURAL ENGINEER FOR REVIEW PRIOR TO FABRICATION.
7. THE OWNER SHALL INDEMNIFY SHELMARK ENGINEERING, LLC. AGAINST ANY LIABILITY ASSOCIATED WITH THE UNAUTHORIZED REUSE OR MODIFICATION OF THE CONSTRUCTION DOCUMENTS, CALCULATIONS, OR OTHER INSTRUMENTS USED IN THE PRODUCTION OF THESE DRAWINGS AND WILL NOT BE ALLOWED FOR ANY USE WHATSOEVER, EXCEPT AS REQUIRED BY BUILDING OFFICIALS IN THEIR PROCESS OF ISSUING A BUILDING PERMIT.

B. SUBMITTALS:

1. FURNISH THREE SETS OF SHOP AND ERECTION DRAWINGS TO STRUCTURAL ENGINEER FOR REVIEW PRIOR TO FABRICATION. UNLESS THE STRUCTURAL ENGINEER PROVIDES WRITTEN EXCEPTION, THE TRANSFER OF REVIEWED SHOP DRAWINGS TO THE ARCHITECT WITHIN 10 WORKING DAYS OF RECEIPT BY THE STRUCTURAL ENGINEER'S OFFICE, SHALL BE CONSIDERED AS "REVIEWED IN A TIMELY MANNER". ONE SET OF REVIEWED SHOP DRAWINGS WILL BE RETAINED BY THE STRUCTURAL ENGINEER.
2. FURNISH TWO SETS OF CONCRETE MIX DESIGNS INCLUDING STRENGTH TEST DATA AND MANUFACTURER'S LITERATURE ON ADMIXTURES FOR REVIEW BY STRUCTURAL ENGINEER NO LATER THAN 2 WEEKS PRIOR TO ON–SITE USE OF THESE MATERIALS.
3. CONTRACT DOCUMENTS ARE NOT TO BE USED BY ANY CONTRACTOR, SUB–CONTRACTOR OR SUPPLIER AS PART OF THEIR SHOP DRAWING SUBMITTAL. ANY SHOP DRAWINGS SUBMITTED IN SUCH A MANNER WILL BE REJECTED AND RETURNED WITHOUT REVIEW.

CONSTRUCTION NOTES

A. STRUCTURAL STABILITY DURING CONSTRUCTION:

1. THE STRUCTURAL DRAWINGS REPRESENT THE COMPLETED STRUCTURE WITH ALL ELEMENTS PROPERLY INSTALLED IN THEIR FINAL POSITIONS.
2. THE CONTRACTOR SHALL BE RESPONSIBLE FOR ALL MEANS AND METHODS OF CONSTRUCTION, INCLUDING THE DESIGN, CONSTRUCTION, SEQUENCING AND MAINTENANCE OF ANY SHORING, BRACING, OR OTHER TEMPORARY SUPPORTS OR ERECTION DEVICES AS MAY BE REQUIRED TO PROPERLY BRACE, SUPPORT AND ERECT ANY ELEMENT DURING CONSTRUCTION.
3. DO NOT PLACE BACKFILL AGAINST FOUNDATION WALLS OR GRADE BEAMS UNTIL BRACING FLOORS ARE IN PLACE, OR OTHER TEMPORARY BRACING IS INSTALLED.
4. IT IS THE CONTRACTOR'S RESPONSIBILITY TO PAINT ALL SURFACES WHICH REQUIRE PROTECTION FROM THE ELEMENTS WITH THE APPROPRIATE PAINT INCLUDING NECESSARY PRIMER COATS AND BACK PRIMING WHERE NECESSARY.

B. SITE SAFETY

1. THE CONTRACTOR SHALL VERIFY ALL CONDITIONS TO HIS SATISFACTION BEFORE PROCEEDING WITH CONSTRUCTION. CONFIRM LOCATION OF ALL UNDERGROUND UTILITIES, CONDUIT, CABLE, PIPE LINES, GAS LINES, TELEPHONE AND POWERLINES. REVIEW SOIL TESTING REPORTS AND ENVIRONMENTAL REPORTS. IF A CONFLICT WITHIN THE PLANS IS DISCOVERED, THE CONTRACTOR IS TO NOTIFY THE ENGINEER BEFORE SUBMITTING BIDS. THE CONTRACTOR ACCEPTS RESPONSIBILITY FOR ANY CONSTRUCTION PROBLEM OR DEFECT CAUSED BY PROCEEDING WITH CONSTRUCTION WITHOUT NOTIFYING THE ENGINEER OF CONFLICTS WITHIN THE PLANS.
2. THE CONTRACTOR SHALL BE RESPONSIBLE FOR ALL SITE SAFETY AND CONFORMANCE TO ALL SAFETY REGULATIONS PRESCRIBED BY FEDERAL, STATE AND LOCAL AUTHORITIES, INCLUDING ADHERENCE TO ALL OSHA REQUIREMENTS IN EFFECT AT THE TIME OF CONSTRUCTION.
3. THE DESIGN, CONSTRUCTION AND MAINTENANCE OF ALL ERECTION OR TEMPORARY SAFETY DEVICES SHALL BE THE RESPONSIBILITY OF THE CONTRACTOR.
4. THE CONTRACTOR, SHALL IDENTIFY, AND BRING TO THE ATTENTION OF THE STRUCTURAL ENGINEER, ANY DETAIL OR CONDITION SHOWN ON THE DRAWING WHICH IS NOT IN COMPLIANCE WITH ANY FEDERAL, STATE, OR LOCAL REGULATIONS, SO THAT THE STRUCTURAL ENGINEER MAY PROVIDE CONFORMING MODIFICATIONS.

SITE SAFETY DURING TROPICAL EVENTS:

A. HURRICANE CONDITIONS OF READINESS: THE TEXAS COAST IS SUBJECT TO HURRICANE STORMS AT VARIOUS TIMES DURING THE YEAR. THE CONTRACTOR SHALL COMPLY WITH THE FOLLOWING REQUIREMENTS FOR HURRICANE READINESS UNLESS SPECIFICALLY DIRECTED OTHERWISE:

1. CONDITION FOUR: (SUSTAINED WIND OF 50 KNOTS OR GREATER EXPECTED WITHIN 72 HOURS) NORMAL DAILY JOB SITE CLEANUP AND GOOD HOUSEKEEPING PRACTICES. COLLECT AND STORE IN PILES OR CONTAINERS ALL SCRAP LUMBER, WASTE MATERIAL, AND RUBBISH FOR REMOVAL AND DISPOSAL AT THE CLOSE OF EACH WORKDAY. MAINTAIN THE CONSTRUCTION SITE AT THE CLOSE OF EACH WORKDAY. MAINTAIN THE CONSTRUCTION SITE INCLUDING STORAGE AREA, FREE OF ACCUMULATION OF DEBRIS. STACK FORM LUMBER IN NEAT PILES LESS THAN 4 FEET HIGH. REMOVE ALL DEBRIS, TRASH, OR OBJECTS THAT COULD BECOME MISSILE HAZARDS. CONTACT SHELMARK ENGINEERING FOR CONDITION OF READINESS UPDATES AND COMPLETION OF REQUIRED ACTION.
2. CONDITION THREE: (SUSTAINED WINDS OF 50 KNOTS OR GREATER EXPECTED WITHIN 48 HOURS)
   A. MAINTAIN "CONDITION FOUR" REQUIREMENTS AND COMMENCE SECURING OPERATIONS AS NECESSARY FOR "CONDITION ONE" WHICH CANNOT BE COMPLETED WITHIN 18 HOURS.
   B. CEASE ALL ROUTINE ACTIVITIES THAT MIGHT INTERFERE WITH SECURING OPERATIONS. COMMENCE SECURING AND STOW ALL GEAR AND PORTABLE EQUIPMENT. MAKE PREPARATIONS FOR SECURING BUILDINGS.
   C. REVIEW REQUIREMENT PERTAINING TO "CONDITION TWO" AND CONTINUE ACTION AS NECESSARY TO ATTAIN "CONDITION THREE" READINESS. CONTACT THE SHELMARK ENGINEERING FOR WEATHER AND CONDITION OF READINESS UPDATES AND COMPLETION OF REQUIRED ACTIONS. REMOVE ALL FLOATING PLANT EQUIPMENT FROM SITE.
3. CONDITION TWO: (SUSTAINED WINDS OF 50 KNOTS OR GREATER EXPECTED WITHIN 24 HOURS) CURTAIL OR CEASE ROUTINE ACTIVITIES UNTIL SECURING OPERATIONS IS COMPLETE. REINFORCE OR REMOVE FORMWORK AND SCAFFOLDING. SECURE MACHINERY, TOOLS, EQUIPMENT, MATERIALS, OR REMOVE FROM THE JOB SITE. EXPEND EVERY EFFORT TO CLEAR ALL MISSILE HAZARDS AND LOOSE EQUIPMENT FROM PROJECT SITE. SECURE THE JOB SITE AND LEAVE PREMISES.
4. CONDITION ONE: (SUSTAINED WINDS OF 50 KNOTS OR GREATER EXPECTED WITHIN 12 HOURS) SAME AS REQUIREMENTS PERTAINING TO "CONDITION TWO".

B. DUE TO THE POTENTIAL DAMAGES THAT WOULD RESULT FROM A HURRICANE OR STORM, EQUIPMENT SHALL BE REMOVED FROM THE SITE WITHIN 24 HOURS OF THE SETTING OF STORM CONDITION THREE.

C. THE CONTRACTOR'S SUPERINTENDENT AND QUALITY CONTROL CHIEF (CQC CHIEF) SHALL ATTEND A BRIEFING ON THE ESTABLISHMENT OF STORM CONDITIONS. COMPLIANCE WITH PROCEDURES ESTABLISHED AS A PART OF THE STORM CONDITION SETTINGS IS MANDATORY.

WINDSTORM CRITERIA:

A. ALL EXTERIOR ROOF AND WALL CLADDING SYSTEMS INCLUDING WINDOWS, DOORS, GARAGE DOORS, AND SKYLIGHTS SHALL HAVE A CURRENT PRODUCT EVALUATION REPORT ON FILE WITH THE TEXAS DEPARTMENT OF INSURANCE.

B. SPECIAL WINDSTORM INSPECTIONS AS REQUIRED BY THE TEXAS DEPARTMENT OF INSURANCE SHALL BE PERFORMED BY A QUALIFIED WINDSTORM INSPECTOR. WRITTEN REPORTS SHALL BE PROVIDED TO THE STRUCTURAL ENGINEER.

C. THE STRUCTURAL ENGINEER OR THEIR ASSIGNED REPRESENTATIVE SHALL MAKE VISUAL OBSERVATIONS OF THE FOLLOWING ITEMS FOR GENERAL CONFORMANCE TO THE STRUCTURAL DESIGN. THE CONTRACTOR SHALL PROVIDE ADEQUATE NOTICE WHEN SUCH ITEMS HAVE BEEN INSTALLED TO THE EXTENT WHICH WILL ALLOW THE OBSERVATION.

1. SUBGRADE PREPARATION INCLUDING PROOF ROLLING
2. FIRST POUR OF CONCRETE FOOTINGS/BEAMS.
3. FIRST POUR OF CONCRETE WALL SYSTEM.
4. WINDOW / DOOR INSTALLATION. (CONTRACTOR SHALL PROVIDE TO SME DOCUMENTATION OF WINDOW MANUFACTURE, SERIES, MODEL AND SIZES FOR ALL LOCATIONS.)
5. EXTERIOR WALL CLADDING – INSPECTING PANEL SIZE, NAIL SIZE, NAIL SPACING AND INSTALLATION AS PER PLANS.
6. ROOF SYSTEM. INSPECTING SCREW SIZE AND PATTERN. (CONTRACTOR SHALL PROVIDE SME W/ DOCUMENTATION OF ROOFING MATERIAL BEFORE INSTALLATION).
7. FINAL FRAMING – INSPECTIONS INCLUDING SIDING AND EXTERIOR FINISHING.
8. MECHANICAL – INSPECTIONS PERTAINING TO PROPER ANCHORAGE OF MECHANICAL EQUIPMENT. (I.E. A/C UNIT).
9. PROTECTION OF EXTERIOR OPENINGS – STORM SHUTTER SYSTEM. (CONTRACTOR SHALL PROVIDE SME W/ DOCUMENTATION OF THE MANUFACTURER AND MODEL FOR THE STORM SHUTTER SYSTEM BEFORE INSTALLATION).

TESTING & QUALITY CONTROL

1. SOILS COMPACTION TESTS AND CONCRETE COMPRESSIVE STRENGTH TESTS SHOULD BE OBTAINED.
2. A PROFESSIONAL ENGINEER OR HIS REPRESENTATIVE MUST PERFORM CONSTRUCTION REVIEWS OF THE SUBGRADE PREPARATION AND SLAB PREPARATION.

CONCRETE

1. ALL CONCRETE SHALL BE NORMAL WEIGHT (NW) AGGREGATE UNLESS NOTED ON THE PLANS OR SCHEDULES.
2. CEMENT FOR ALL CONCRETE IN CONTACT WITH SOILS USE TYPE: I/II
3. CONCRETE SHALL CONFORM TO THE FOLLOWING TABLE:

USE	28 DAY STRENGTH	WEIGHT CLASS	SLUMP ±1"	MAX. AGG. SIZE	AIR
	PSI		INCHES	INCHES	%
FOOTINGS/PIER CAPS	4000	NW	4	1	0–2
WALLS AND COLUMNS	3000	NW	4	1	0–2
FLATWORK	3000	NW	4	1	0–2
ALL OTHER	3000	NW	5	1	0–2

CONCRETE REINFORCEMENT:

1. DETAIL BARS IN ACCORDANCE WITH "ACI DETAILING MANUAL", PUBLICATION SP–66, AND "BUILDING CODE REQUIREMENTS FOR STRUCTURAL CONCRETE, "ACI 318, LATEST EDITIONS, PROVIDE DETAILS INDICATING REINFORCING CONTINUITY AT CONSTRUCTION JOINTS.
2. REINFORCEMENT PROTECTION

   CONCRETE PLACED AGAINST EARTH .... 3"

   CONCRETE PLACED IN FORMS BUT EXPOSED TO WEATHER OR EARTH:
   BARS #5 AND SMALLER .... 1–1/2"
   BARS #6 AND LARGER .... 2"
   COLUMNS, GIRDERS, BEAMS .... 1–1/2"
   SLABS OR WALLS NOT EXPOSED TO WEATHER OR EARTH .... 1"
3. SPLICES IN REINFORCEMENT ARE NOT PERMITTED EXCEPT AS DETAILED OR AUTHORIZED BY STRUCTURAL ENGINEER.
4. LAP ALL CONTINUOUS REINFORCING BARS 40 DIAMETERS AT SPLICES, TEES, AND CORNERS. MINIMUM LAP SHALL BE 24–INCHES.
5. SPLICE CONTINUOUS TOP BARS AT MIDSPAN, SPLICE CONTINUOUS BOTTOM BARS OVER THE SUPPORT.
6. PROVIDE ACCESSORIES NECESSARY TO PROPERLY SUPPORT REINFORCING AT POSITIONS SHOWN ON PLANS AND DETAILS.
7. ENSURE HORIZONTAL CONTINUITY IN WALLS, FOOTINGS AND GRADE BEAMS, BY PROVIDING CORNER BARS AT ALL CORNERS AND INTERSECTIONS, CORNER BARS SHALL MATCH SIZE AND SPACING OF HORIZONTAL REINFORCING AND EXTEND A MINIMUM OF 40 BAR DIAMETERS BEYOND THE CORNER.
8. PLACE 2–#5 (1 EACH FACE) WITH 2'–0" PROJECTION AROUND OPENINGS THROUGH FLOOR TOPPING SLABS, UNLESS NOTED.
9. WIRE FABRIC REINFORCEMENT IS NOT PERMITTED.
10. WELDING OF REINFORCING SHALL NOT BE PERMITTED UNLESS SPECIFICALLY CALLED FOR OR APPROVED BY THE STRUCTURAL ENGINEER.
11. DO NOT RE–BEND ANY BARS WITH A YIELD STRESS GREATER THAN 40 KSI. THE USE OF HEAT TO FACILITATE BENDING OF REINFORCING BARS WILL NOT BE PERMITTED.
12. RUSTED REINFORCEMENT WILL NOT BE REJECTED PROVIDED THE MINIMUM DIMENSIONS AND CROSS SECTIONAL AREA OF A HARD WIRE BRUSH SPECIMEN MEET THE PHYSICAL REQUIREMENTS FOR THE SIZE AND GRADE OF THE STEEL SPECIFIED.
13. CONCRETE REINFORCING SHALL CONFORM TO THE FOLLOWING TABLE:

USE	ASTM	YIELD, KSI	NOTES
MILD REINFORCING	A615	60	
COLUMN TIES	A615	60	#3 BARS 40 KSI
BEAM STIRRUPS	A615	60	#3 BARS 40 KSI
WELDABLE	A706	60	

COUNTY APPROVAL:
SIGNATURE ______________________ DATE__________

FOUNDATION NOTES:

1. THE SOILS ARE ASSUMED TO BE LEVEL ON THIS SITE AND WITHIN 25' OF THE SITE.
2. DO NOT PLANT TREES CLOSER THAN 20 FEET TO THE SLAB. REMOVE ALL EXISTING TREE TRUNK/ROOTS AND REPLACE WITH COMPACTED FILL.
3. TO BRING TO FINISH GRADE SELECT STRUCTURAL FILL SHALL BE PROVIDED UNDERNEATH THE SLAB AREA. THE FILL SHALL CONSIST OF OFF–SITE INORGANIC SILTY CLAYS OR SANDY CLAYS WITH LIQUID LIMIT LESS THAN 40 AND A PLASTICITY INDEX (PI) BETWEEN 10 END 20 PLACED IN LIFTS NOT EXCEEDING 8–INCHES. THE TOP 1 TO 2–INCHES UNDER THE SLAB CAN BE BANK SAND FOR LEVELING PURPOSES.
4. THE ADDITIONAL FILL AND THE TOP 8–INCHES OF THE NATURAL SOIL, AFTER SCARIFYING THE TOP 6–INCHES, SHALL BE COMPACTED TO 95% STANDARD PROCTOR DENSITY PER ASTM D–698 AT A MOISTURE CONTENT WITHIN –1 TO +3% OF OPTIMUM.
5. SITE SHALL BE GRADED AND MAINTAINED TO PERMIT POSITIVE DRAINAGE AWAY FROM THE FOUNDATION.
6. ALL MIXING, TRANSPORTATION, PLACING, AND CURING OF CONCRETE SHALL COMPLY WITH ACI 318–02.
7. ALL FOUNDATION CONCRETE SHALL BE NORMAL WEIGHT AND SHALL HAVE A COMPRESSIVE STRENGTH OF 4,000 PSI AT 28 DAYS WITH A 4–INCH TO 5–INCH SLUMP FOR THE SLAB.
8. REINFORCING BARS WITH A SIZE GREATER THAN #3 SHALL CONFORM TO ASTM A–615 GRADE 60. LAP CONTINUOUS BARS 40 BAR DIAMETERS AT SPLICES.
9. SUPPORT SLAB REINFORCEMENT WITH PLASTIC CHAIRS AT 24" O.C.E.W. MAXIMUM OR CONCRETE BRICKS @ 3'–0" O.C.E.W. MAXIMUM. ADDITIONAL CHAIR/SUPPORTS MAY BE REQUIRED AT DISCRETION ON ENGINEER
10. PROVIDE (4) #5 X 4'–0" REBAR (2 TOP AND 2 BOTTOM) IN EXTERIOR FACE OF GRADE BEAMS AT CORNERS. PROVIDE (4) #5 X 4'–0" REBAR (2 TOP AND 2 BOTTOM) WHERE INTERIOR BEAMS DEAD END INTO ANOTHER BEAM. WHEN THE GRADE BEAM DEPTH EXCEEDS 30–INCHES PROVIDE (2) #5 BARS AT THE CENTER AND EVERY 12–INCHES THEREAFTER.
11. DAMP PROOF SLAB WITH A MINIMUM OF 6 MIL. POLYETHYLENE SHEATHING. LAP JOINTS 6–INCHES AND SEAL WITH TAPE. TURN UP AT WALLS.
12. PROVIDE PROPER COVER FOR REINFORCEMENT PROTECTION UNDER CONCRETE REINFORCEMENT SECTION
13. PIPING AND ELECTRICAL SHALL BE UNDER THE SLAB AND SLEEVED THROUGH ALL GRADE BEAMS.
14. STIRRUPS SHALL BE NO. 3 BARS SPACED PER PLANS. ALTERNATE METHODS MUST BE PRE–APPROVED BY ENGINEER.
15. STIRRUP DEPTH TO BE BEAM DEPTH (BELOW DROPS) LESS 7" (UNLESS NOTED OTHERWISE).
16. MOISTURE LOSS IN THE SOILS SHALL BE MINIMIZED.
17. PROVIDE CRACK CONTROL JOINTS AT 25 FEET CENTERS EACH WAY AT ALL SLAB AREAS WHICH WILL BE VISIBLE. SAWCUT CONTROL JOINTS WITHIN 24 HOURS AFTER HARD TROWELING.
18. SOILS COMPACTION TESTS AND CONCRETE COMPRESSIVE STRENGTH TESTS SHOULD BE OBTAINED. A PROFESSIONAL ENGINEER OR HIS REPRESENTATIVE MUST PERFORM CONSTRUCTION REVIEWS OF THE FOOTING INSTALLATION AND SLAB PREPARATION.
19. FOOTINGS SHALL BEAR ON EXISTING SOILS WHICH MEET SELECT FILL CLASSIFICATIONS. IF QUESTIONABLE SOIL IS ENCOUNTERED, THE STRUCTURAL ENGINEER SHALL BE NOTIFIED IMMEDIATELY. RE: REPORT NO. 1708/1200 BY COASTAL TESTING LABORATORIES, INC. ALL RECOMMENDATIONS THEREIN THAT RELATE TO THE WORK SHOWN ON THESE DRAWINGS MUST BE FOLLOWED.

DESIGN WIND PRESSURES (PSF)

COMPONENT	EFFECTIVE AREA	DESIGN PRESSURE (PSF)
DOOR 3068	20 SF	+40 / –42
WINDOW TYPE A	20 SF	+40 / –55
WINDOW TYPE B	10 SF	+40 / –55
WINDOW TYPE C	20 SF	+40 / –52
STOREFRONT WINDOWS	50 SF	+40 / –52
UPPER LOUVERS	20 SF	+40 / –52
UPPER WINDOWS	20 SF	+40 / –52

NOTE: ALL GLAZED AND NON–GLAZED OPENINGS SHALL BE IMPACT RATED AS PER TEXAS DEPARTMENT OF INSURANCE RECOMMENDATIONS.

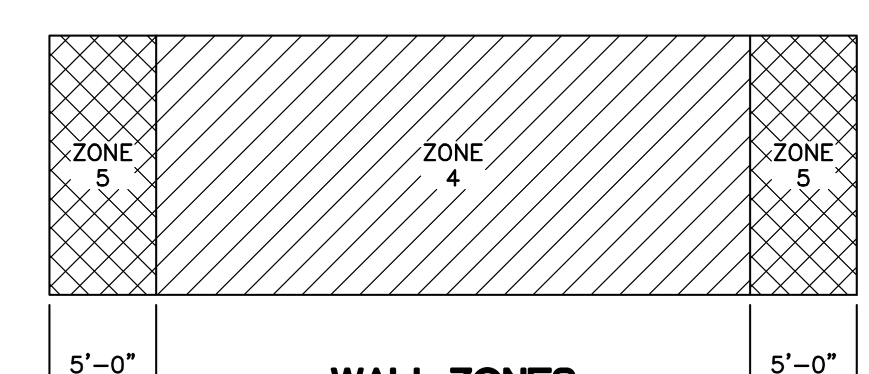

WALL ZONES

GALVESTON COUNTY
BEACH PAVILION
CRYSTAL BEACH, TX 77650
BE–Arc LLC Project No : C–13–007.01

SHELMARK ENGINEERING, L.L.C.
CIVIL | MARINE | PLANNING | STRUCTURAL
921 FM 517 ROAD EAST | DICKINSON, TEXAS 77539
TX FIRM NO. F-2115

eas easterwood ARCHITECTS STUDIO
409-354-8976
EASTERWOOD@BE-ARC.COM
2328 BALL STREET
GALVESTON TEXAS 77550

DATE	REVISION

STATE OF TEXAS
MARCUS J. MICHNA
84739
LICENSED
PROFESSIONAL ENGINEER
8-24-18

BID SET

DATE ISSUED: 08/24/2018

COPYRIGHT 2018

S0.1

GENERAL NOTES

MASONRY NOTES:

1. ALL MASONRY MATERIALS AND CONSTRUCTION SHALL COMPLY WITH THE RECOMMENDATIONS OF THE BRICK INSTITUTE OF AMERICA (BIA) AND NATIONAL CONCRETE MASONRY ASSOCIATION (NCMA) AND MINIMUM REQUIREMENTS ESTABLISHED BY LOCAL BUILDING CODE.
2. ALL CONCRETE MASONRY UNITS (CMU) SHALL BE ASTM C-91 TYPE M UNLESS OTHERWISE SPECIFIED BY APPLICABLE BUILDING CODE.
3. CONTROL JOINTS SHALL BE SPACED PER PLANS AND SPECIFICATIONS OR AT A MAXIMUM SPACING OF 40'-0" CENTERS, UNLESS SPECIFICALLY APPROVED OTHERWISE BY ENGINEER.
4. MORTAR: EXCEPT AS OTHERWISE SET FORTH HEREIN ALL MORTARS AND THE MATERIALS THEREIN SHALL CONFORM TO THE STANDARD SPECIFICATIONS FOR MORTAR OF MASONRY UNITS, ASTM C270.

   A) MORTAR USED TO BOND UNIT MASONRY SHALL BE OF TYPE M, S, OR N, AND SHALL COMPLY WITH THE PROPERTY SPECIFICATIONS SET FORTH BELOW:

MORTAR STRENGTH PROPERTY SPECIFICATIONS

TYPE	MINIMUM AVERAGE STRENGTH (PSI)
M	2500
S	1800
N	750

   B) THE TYPE OF MORTAR BASED ON CONSIDERATION OF THE LOCATION OF THE UNIT MASONRY CONSTRUCTION SHALL BE AS FOLLOWS:

USE OF LOCATION	TYPE OF MORTAR
BELOW GRADE FOUNDATION AND WALLS	M
RETAINING WALLS	M
FIRE RESISTIVE WALLS RATED 2 HOURS OR MORE	M
EXTERIOR WALLS AND LOAD BEARING WALLS	M
PARTITIONS	M
SOLID MASONRY UNITS	ONE CLASSIFICATION LESS THAN THE ABOVE
MORTAR OR GROUT UNDER CONCENTRATED LOADS	M

5. ALL REINFORCED MASONRY WALLS WITH OPENINGS UP TO 4'-0" WIDE, SHALL HAVE ONE BAR (MINIMUM) AT EACH SIDE OF OPENINGS. FOR OPENINGS LARGER THAN 4'-0" WIDE PROVIDE 2 BARS AT EACH SIDE OF OPENINGS. FILL ALL REINFORCED CELLS WITH 2500 P.S.I. GROUT. REINFORCING AT EDGES OF OPENINGS TO MATCH TYPICAL MASONRY REIN-FORCING SIZE (UNLESS NOTED OTHERWISE) AND EXTEND TO TOP OF WALL.
6. SPECIAL INSPECTIONS ARE REQUIRED IN ACCORDANCE WITH IBC 2009 1704.5.2.
7. PROVIDE TRUSS TYPE HORIZONTAL REINFORCING AT 16" O.C. FOR ALL CMU WALLS UNLESS NOTED OTHERWISE.
8. GROUT SOLID ALL REINFORCED CELLS AND BOND BEAMS WITH 2500 PSI GROUT.
9. ALL REINFORCED MASONRY WALL CORNERS AND INTERSECTIONS SHALL HAVE ONE VERTICAL BAR (MINIMUM). FILL REINFORCED CELL (S) WITH 2500 P.S.I. GROUT. REINFORCING SHALL MATCH TYPICAL MASONRY REINFORCING SIZE (UNLESS NOTED OTHERWISE) AND EXTEND TO TOP OF WALL.
10. PROVIDE ONE VERTICAL BAR (MIN.) FIRST CELL EACH SIDE OF CONTROL JOINTS. FILL CELL WITH 2500 P.S.I. GROUT.

STRUCTURAL STEEL:

A. CONNECTIONS:

1. UNLESS SPECIFICALLY NOTED ON THE DRAWINGS, ALL STEEL DETAILS AND CONNECTIONS SHALL CONFORM TO THE STANDARDS OF A.I.S.C. AND SHALL DEVELOP ONE-HALF THE SHEAR CAPACITY OF THE MEMBER.
2. CONNECTIONS SHALL USE A MINIMUM OF 3/4" DIA A325 BOLTS (OR WELDED EQUIVALENT) UNLESS OTHERWISE NOTED. EACH CONNECTION SHALL HAVE A MINIMUM OF TWO BOLTS.
3. BOLTS MAY BE INSTALLED SNUG TIGHT AS DEFINED BY AISC, WITH THE FOLLOWING EXCEPTIONS WHICH MUST BE TENSIONED TO THE VALUES IN TABLE 4 OF "RCSC SPECIFICATIONS FOR STRUCTURAL JOINTS USING A325 OR A490 BOLTS".

   A. WHERE NOTED AS "SC" ON THE DRAWINGS.

B. WELDS:

1. MINIMUM WELDS: AISC SPECIFICATION, NOT LESS THAN 1/4" FILLET, CONTINUOUS UNLESS OTHERWISE NOTED.
2. ALL GROOVE WELDS TO BE FULL PENETRATION UNLESS NOTED.
3. WELDERS SHALL HAVE CURRENT EVIDENCE OF PASSING THE APPROPRIATE A.W.S. QUALIFICATION TESTS.

C. FIELD MODIFICATIONS:

1. NO BEAM, COLUMN, BRACE, CONNECTION, BASE PLATE OR ANCHOR BOLT MAY BE FIELD MODIFIED WITHOUT PRIOR APPROVAL OF THE STRUCTURAL ENGINEER.

D. DESIGNED, FABRICATED, AND ERECTED IN ACCORDANCE WITH AMERICAN INSTITUTE OF STEEL CONSTRUCTION, MANUAL OF STEEL CONSTRUCTION, ALLOWABLE STRESS DESIGN, LATEST EDITION.

E. SPLICING OF STRUCTURAL STEEL WHERE NOT DETAILED IS PROHIBITED WITHOUT PRIOR APPROVAL OF STRUCTURAL ENGINEER.

F. ALL STEEL MEMBERS AND CONNECTIONS SHALL RECEIVE ONE SHOP COAT OF IRON OXIDE CORROSION INHIBITIVE PRIMER PER METAL BUILDING MANUFACTURER RECOMMENDATIONS.

SHAPE	ASTM	MIN. YIELD STRENGTH, KSI	NOTES
WF BEAMS	A992	50	BEAMS AND COLUMNS
ROLLED SHAPES	A36	36	ANGLES AND CHANNELS
PIPE	A53	35	
TUBE	A500 GRADE B	46	
PLATES	A36	36	
MISC.	A36	36	
BOLTS	A325		
ANCHOR RODS	F1554	36	UNLESS NOTED OTHERWISE

WOOD FRAMING SPECIFICATIONS

1. WOOD FRAMING SIZES, VERTICAL FRAMING, HORIZONTAL FRAMING FIRESTOPS, ANCHORAGE, FURRING AND CONNECTORS NOT SHOWN ON DOCUMENTS SHALL BE PER LOCAL BUILDING CODE MINIMUM REQUIREMENTS.
2. ROOF SHEATHING.

   2.1. PLYWOOD ROOF SHEATHING SHALL BE 5/8" THICK STANDARD C.D. EXPOSURE 1, PANEL INDEX 19/32 CONFORMING TO U.S. PS-1 AND STAMPED WITH DFPA GRADE-TRADEMARK.

   2.2. PLYWOOD PANELS SHALL BE NAILED TO SUPPORTS WITH 8d COMMON NAILS, OR EQUIVALENT FASTENERS.

   2.3. NAIL SPACING SHALL BE SIX INCHES ON CENTER AT PANEL EDGES AND 12 INCHES ON CENTER AT INTERMEDIATE SUPPORTS.
3. ALL STRUCTURAL LUMBER SHALL BE S.Y.P. OF THE FOLLOWING MINIMUM GRADES AND ALLOWABLE STRESSES OR EQUIVALENT AS PER NATIONAL FOREST PRODUCTS ASSOCIATION.

STUDS	STANDARD STUD
JOISTS	STRUCT. GRADE NO. 2
BEAM 2"-4" THICK	STRUCT. GRADE NO. 2
POSTS	STRUCT. GRADE NO. 2
PLATE STOCK	STRUCT. GRADE NO. 3

4. TRELLIS FRAMING AND BEAMS SHALL BE BALD CYPRESS.

JOISTS	STRUCT. GRADE NO.2
BEAMS >2"	STRUCT. GRADE NO.1

5. ALL LUMBER SHALL BE STAMPED WITH THE GRADE MARK OF AN APPROVED TESTING AGENCY.
6. ALL WOOD IN CONTACT WITH CONCRETE OR EXPOSED TO WEATHER SHALL BE TREATED LUMBER.
7. FRAMED OPENINGS: DOUBLE STUD FOR OPENING LESS THAN 4' WIDE TRIPLE STUD FOR OPENING 4' WIDE OR MORE.
8. THE NUMBER OF WALL STUDS AT BEARING POINTS OF 2X MEMBER BEAMS SHALL EXCEED THE NUMBER OF MEMBERS IN THE BEAM BY ONE. THE CENTERLINE OF THE BEAM SHALL BE THE CENTERLINE OF THE SUPPORTING WALL STUDS. (UNLESS NOTED OTHERWISE ON PLAN.)
9. ALL FLUSH BEAMS AND JOISTS TO BE SUPPORTED BY APPROVED HANGER.
10. FASTENERS AND CONNECTORS FOR PRESERVATIVE-TREATED WOOD.

    10.1. FASTENERS, INCLUDING NUTS AND WASHERS, IN CONTACT WITH PRESERVATIVE-TREATED WOOD SHALL BE OF HOT-DIPPED ZINC-COATED GALVANIZED (HDG) STEEL, STAINLESS STEEL (TYPE 304 OR 316), SILICON BRONZE OR COPPER. FASTENERS OTHER THAN NAILS, TIMBER RIVETS, WOOD SCREWS AND LAG SCREWS SHALL BE PERMITTED TO BE OF MECHANICALLY DEPOSITED ZINC-COATED STEEL WITH COATING WEIGHTS IN ACCORDANCE WITH ASTM B-695, CLASS 55 MINIMUM.

    10.2. CONNECTORS THAT ARE USED IN EXTERIOR APPLICATIONS AND IN CONTACT WITH PRESERVATIVE-TREATED WOOD SHALL HAVE COATING TYPES AND WEIGHTS IN ACCORDANCE WITH THE TREATED WOOD OR CONNECTOR MANUFACTURER'S RECOMMENDATIONS. IN THE ABSENCE OF MANUFACTURER'S RECOMMENDATIONS, A MINIMUM OF ASTM A653, TYPE G185 ZINC-COATED GALVANIZED STEEL, OR EQUIVALENT, SHALL BE USED.

    10.3. FASTENINGS FOR WOOD FOUNDATIONS. FASTENINGS, INCLUDING NUTS AND WASHERS, FOR WOOD FOUNDATIONS SHALL BE OF TYPE 304 OR 316 STAINLESS STEEL. EXCEPTION: WHEN FRAMING LUMBER IS TREATED WITH CHROMATED COPPER ARSENATE (CCA) AND THE MOISTURE CONTENT OF THE FRAMING REMAINS AT 19 PERCENT OR LESS (SUCH AS STUDS, BLOCKING, AND TOP PLATES OF EXTERIOR AND INTERIOR BASEMENT WALLS), HOT-DIPPED GALVANIZED (ZINC-COATED) STEEL FASTENERS CONFORMING TO THE REQUIREMENTS OF ASTM A153 SHALL BE PERMITTED IN LUMBER-TO-LUMBER CONNECTIONS.

    10.4. ALL HDG FASTENERS, CONNECTORS, AND ANCHOR RODS SHALL BE TOUCHED UP AS REQUIRED WITH AN APPROVED COLD GALVANIZED COMPOUND CONFORMING TO ASTM A-780.
11. DO NOT BORE HOLES THROUGH ANY STRUCTURAL BEAMS, GLU-LAMS, OR PRE-ENGINEERED TRUSS.

EPOXY ANCHORS/ADHESIVE

1. INJECTABLE ADHESIVE SHALL BE DESIGNED TO ACCEPT STATIC MIXING NOZZLE WHICH THOROUGHLY BLENDS COMPONENT A AND COMPONENT B AND ALLOWS INJECTION DIRECTLY INTO DRILLED HOLE. ONLY INJECTION TOOLS AND STATIC MIXING NOZZLES AS RECOMMENDED BY MANUFACTURER SHALL BE USED. MANUFACTURE'S INSTRUCTIONS SHALL BE FOLLOWED. INJECTION ADHESIVE SHALL BE FORMULATED TO INCLUDE RESIN AND HARDENER TO PROVIDE OPTIONAL CURING SPEED AS WELL AS HIGH STRENGTH AND STIFFNESS. TYPICAL CURING TIME AT 68°F (20°C) SHALL BE APPROXIMATELY 30 MINUTES.
2. INJECTION ADHESIVE SHALL BE HIT-HY 200 MAX-SD, AS FURNISHED BY HILTI.
3. DRILL HOLES WITH ROTARY IMPACT HAMMER DRILLS USING CARBIDE TIPPED BITS, DRILL BITS SHALL BE OF DIAMETERS AS SPECIFIED BY THE ANCHOR MANUFACTURER. UNLESS OTHERWISE SHOWN ON THE DRAWINGS, ALL HOLES SHALL BE DRILLED PERPENDICULAR TO THE CONCRETE SURFACE.
4. PERFORM ANCHOR INSTALLATION IN ACCORDANCE WITH MANUFACTURER INSTRUCTIONS.
5. CLEAN ALL HOLES PER MANUFACTURER INSTRUCTIONS TO REMOVE LOOSE MATERIAL AND DRILLING DUST PRIOR TO INSTALLATION OF ADHESIVE. INJECT ADHESIVE INTO HOLES PROCEEDING FROM THE BOTTOM OF THE HOLE AND PROGRESSING TOWARD THE SURFACE IN SUCH A MANNER AS TO AVOID INTRODUCTION OF AIR POCKETS IN THE ADHESIVE. FOLLOW MANUFACTURER RECOMMENDATIONS TO ENSURE PROPER MIXING OF ADHESIVE COMPONENTS. SUFFICIENT ADHESIVE SHALL BE INJECTED IN THE HOLE TO ENSURE THAT THE ANNULAR GAP IS FILLED TO THE SURFACE. REMOVE EXCESS ADHESIVE FROM THE SURFACE. SHIM ANCHORS WITH SUITABLE DEVICE TO CENTER THE ANCHOR IN THE HOLE. DO NOT DISTURB OR LOAD ANCHORS BEFORE MANUFACTURER SPECIFIED CURE TIME HAS ELAPSED.
6. OBSERVE MANUFACTURER RECOMMENDATIONS WITH RESPECT TO INSTALLATION TEMPERATURES OF CARTRIDGE INJECTION ADHESIVE ANCHORS AND CAPSULE ANCHORS.
7. REMOVE AND REPLACE MISPLACED OR MALFUNCTIONING ANCHORS. FILL EMPTY ANCHOR HOLES AND PATCH FAILED ANCHOR LOCATIONS WITH HIGH-STRENGTH NON-SHRINK, NON METALLIC GROUT.
8. ANCHORS, BOLTS, NUTS, AND WASHERS: BOLTS AND STUDS, NUTS, AND WASHERS SHALL CONFORM TO ASTM A307, GRADE A, AND ASTM A449, ASTM A563, AND ASTM F436, F1554 GRADE 55, AS APPLICABLE. HOT-DIP GALVANIZED BOLTS AND STUDS INCLUDING ASSOCIATED NUTS AND WASHERS IN ACCORDANCE WITH ASTM A153.

DECKING AND SHEATHING

1. DECKING FOR ROOF SHALL BE 5/8" THICK CDX PLYWOOD EXPOSURE 1 WITH AN APR RATING OF 40/20. DECKING APPLIED OVER 8.25" STRUCTURAL INSULATED PANELS (S.I.P.).
2. DECKING FOR FLOORS SHALL BE 1 1/8" THICK T&G APA RATED PLYWOOD STANDARD C-D INTERIOR WITH EXTERIOR GLUE OR ORIENTED STRAND BOARD (OSB) (STURDY FLOOR) WITH PANEL SPAN RATING OF 48/24. INSTALL DECKING WITH FACE GRAIN ACROSS SUPPORT.
3. GYPSUM WALLBOARD FOR SHEARWALLS SHALL BE 5/8" THICK AND FREE FROM IMPERFECTIONS AND CONFORM TO ASTM C79 SPECIFICATIONS AND AS SHOWN ON ARCHITECTURAL DRAWINGS.
4. EXTERIOR WALL SHEATHING SHALL BE 5/8" CDX PLYWOOD. (U.N.O.)

PILING INSTALLATION:

1. PILING SHALL BE DRIVEN AT THE LOCATION AND TO THE ELEVATION SHOWN ON THE PLANS OR AS DESIGNATED BY THE ENGINEER.
2. PENETRATION: THE PILING SHALL BE DRIVEN TO THE DEPTH SHOWN ON THE PLANS UNLESS PROPER BEARING RESISTANCE IS ACHIEVED AND APPROVED BY THE ENGINEER.
3. THE ENTIRE HAMMER-CUSHION-PILE SYSTEM SHOULD BE COMPATIBLE AND CAPABLE OF INSTALLING PILING TO DESIGN PENETRATIONS IN AN UNDAMAGED STATE.
4. THE PILE DRIVING HELMET SHOULD BE SUFFICIENTLY LOOSE AROUND THE PILE TOP SO AS NOT TO DEVELOP TORSIONAL STRESSES IN THE PILE WHILE DRIVING.
5. THE TOP OF PILE SHOULD BE SQUARE OR PERPENDICULAR TO THE LONGITUDINAL AXIS OF THE PILE TO PREVENT DAMAGE TO THE PILE EDGES DURING DRIVING.
6. THE PILE SHOULD BE PROPERLY ALIGNED PRIOR TO DRIVING. REALIGNMENT ONCE DRIVING HAS COMMENCED IS NOT PERMITTED.
7. WATER JETTING MAY BE EMPLOYED WITH THE APPROVAL OF THE ENGINEER. WATER JETTING SHOULD EXTEND NO DEEPER THAN FIVE (5) FEET ABOVE THE FINAL TIP ELEVATION. FLOW SHOULD BE ADJUSTED SO THAT THE WATER JETTING WILL NOT CAUSE THE PILE TO PENETRATE AT A RATE GREATER THAN FIVE (5) FEET PER MINUTE.

COUNTY APPROVAL:
SIGNATURE _____ DATE_____

STRUCTURAL GLAZED TILE (SGT)

1. PRODUCT:

   1.1. REFER TO ARCHITECTURAL PLANS FOR SGT SIZES AND LOCATIONS.
2. INSTALLATION:

   2.1. PREPARATION: IN PREPARATION FOR THE PROPER INSTALLATION OF SGT THE MASON CONTRACTOR SHOULD BE FAMILIAR WITH THE RECOMMENDATIONS AND REQUIREMENTS OF THE BRICK INDUSTRY ASSOCIATION AND THE MANUFACTURER. THE MATERIAL SHOULD BE KEPT CLEAN AND DRY. DO NOT LAY SGT UNITS IN EXTREME COLD OR HOT WEATHER CONDITIONS WITHOUT TAKING NECESSARY PRECAUTIONS FOR SUCH CONDITIONS TO ENSURE PROPER BONDING.

   2.2. MORTARS: STRUCTURAL GLAZED TILE IS LAID IN STANDARD CEMENT MORTAR FOLLOWING THE GUIDELINES IN ASTM C-270, MORTAR FOR UNIT MASONRY.

   2.3. METHOD: TO AVOID DAMAGE TO THE GLAZED FACE KEEP THE UNITS IN THE MANUFACTURERS' PACKAGING UNTIL THE INDIVIDUAL UNIT IS READY TO BE LAID IN THE WALL. DO NOT WET UNITS. THE MASON SHOULD APPLY MORTAR TO EACH BRICK WITH FULL HEAD AND BED JOINTS SHOVING UNIT INTO PLACE KEEPING PLUMB, SQUARE AND LEVEL TO THE LINE.

   2.4. JOINTS SHOULD BE UNIFORM 3/8", EXCEPT FOR 6T SERIES, WHICH IS 5/16". TOOL JOINTS CONCAVE WITH 1"OR LARGER NON-METALLIC JOINTER. CUT SGT USING A WET MASONRY SAW, DIAMOND BLADE. KEEP EXCESS MORTAR FROM THE FACE OF THE BRICK BY WIPING WITH A CLEAN RAG WITHIN 30 MINUTES. DO NOT USE METAL TOOLS ON GLAZED FACE. ALLOW WALL TO CURE FOR 24 HOURS.

   2.5. CLEAN FNISHED WALLS BY WETTING WITH CLEAN WATER THEN APPLYING DETERGENT, IF NECESSARY, AND SCRUBBING WITH A STIFF FIBER BRUSH. USE A WOODEN SCRAPER TO REMOVE EXCESS MORTAR FROM DIFFICULT AREAS. RINSE THOROUGHLY WITH CLEAN WATER. DO NOT USE ACIDS OR ABRASIVE CLEANERS. PROTECT FINISHED WALLS FROM DAMAGE CAUSED BY OTHER TRADES AND MACHINERY

   2.6. FOR MOST EXTERIOR APPLICATIONS: DO NOT WET UNITS. LAY UNITS WITH CELLS RUNNING VERTICALLY TO ALLOW FOR DRAINAGE OF MOISTURE WITHIN THE WALL; CAVITY WALL CONSTRUCTION CONSISTING OF A MINIMUM 2"CAVITY, APPROPRIATE FASHING AND WEEP HOLES AND VENTS FOLLOWING THE GUIDELINES AS OUTLINED BY THE BRICK INDUSTRY ASSOCIATION, IS NECESSARY; PROPER COPING, SLOPED SILLS AND ATTENTION TO AREAS WHERE PROJECTIONS OR RECESSES EXIST, DETAIL TO PERMIT DRAINAGE TO FLASHING THEN WEEP HOLES. DO NOT USE JOINT SEALERS ON EXTERIOR.

GALVESTON COUNTY
BEACH PAVILION
CRYSTAL BEACH, TX 77650

BE-Arc LLC Project No : C-13-007.01

SHELMARK ENGINEERING, LLC.
CIVIL | MARINE | PLANNING | PROJECT MGMT.
920 FM 517 ROAD EAST | DICKINSON, TEXAS 77539
TX FIRM NO. F-2124

eas easterwood ARCHITECTS STUDIO
2328 BALL STREET
GALVESTON TEXAS 77550
409-354-8976
EASTERWOOD@BE-ARC.COM

DATE	REVISION

STATE OF TEXAS
MARCUS J. MICHNA
84739
LICENSED PROFESSIONAL ENGINEER
8-24-18

BID SET

DATE ISSUED: 08/24/2018

COPYRIGHT 2018

S0.2

GENERAL NOTES

COUNTY APPROVAL:
SIGNATURE _____ DATE_____

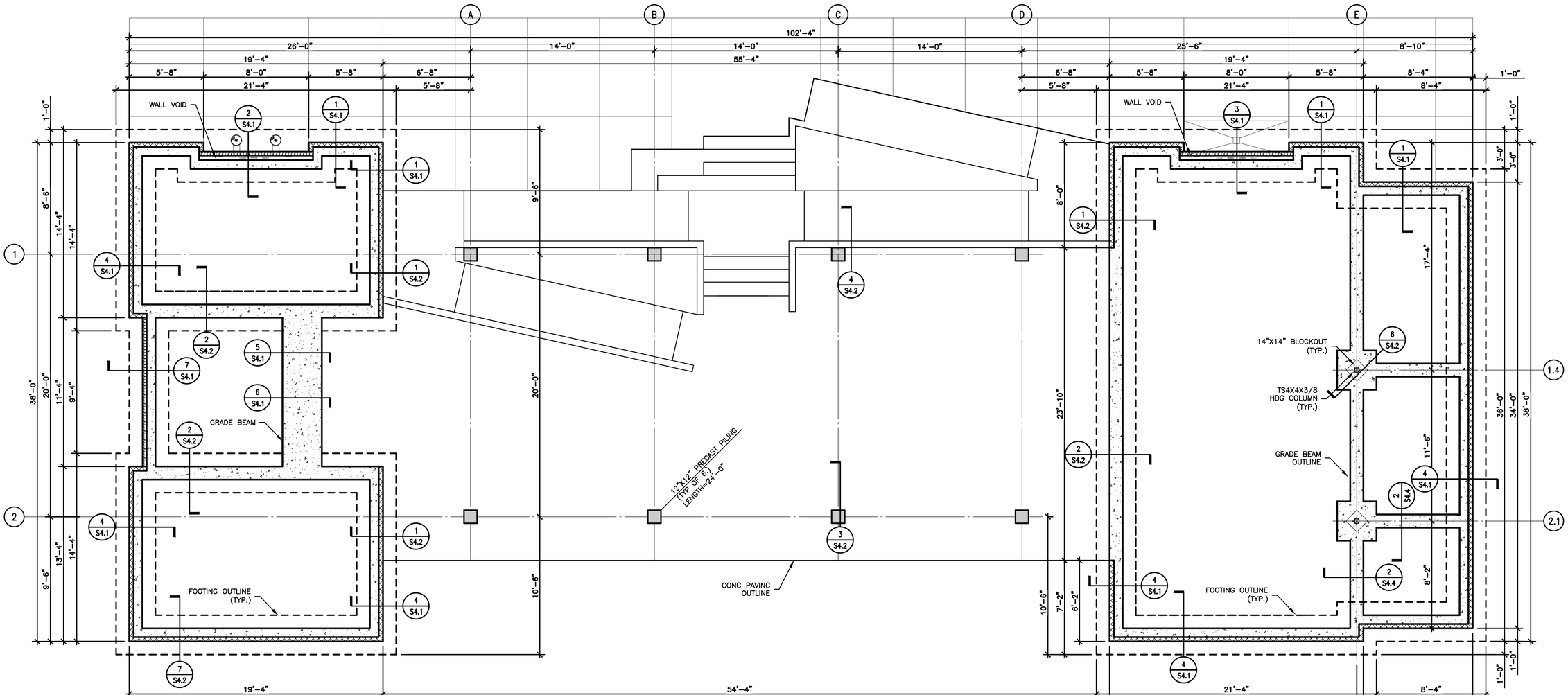

LEGEND

- CMU BLOCK WALL
- GLAZED TILE BLOCK WALL
- REINFORCED CONCRETE STEMWALL/FOOTING
- FOOTING OUTLINE
- EL. 14'-9" SPOT ELEVATION

FOUNDATION STEM WALL / FOOTING PLAN

SCALE: 1/4"=1'-0"

GALVESTON COUNTY
BEACH PAVILION
CRYSTAL BEACH, TX 77650

BE-Arc LLC Project No : C-13-007.01

SHELMARK ENGINEERING, L.L.C.
CIVIL | MARINE | PLANNING | PROFESSIONAL
920 FM 517 ROAD EAST | DICKINSON, TEXAS 77539
TX FIRM NO. F-2124

easterwood ARCHITECTS STUDIO
2328 BALL STREET
GALVESTON TEXAS 77550
409-354-8976
EASTERWOOD@BE-ARC.COM

DATE	REVISION

STATE OF TEXAS
MARCUS J. MICHNA
84739
LICENSED PROFESSIONAL ENGINEER
8-24-18

BID SET

DATE ISSUED: 08/24/2018

COPYRIGHT 2018

S1.1

FOUNDATION STEM WALL FOOTING PLAN

COUNTY APPROVAL:
SIGNATURE _____ DATE_____

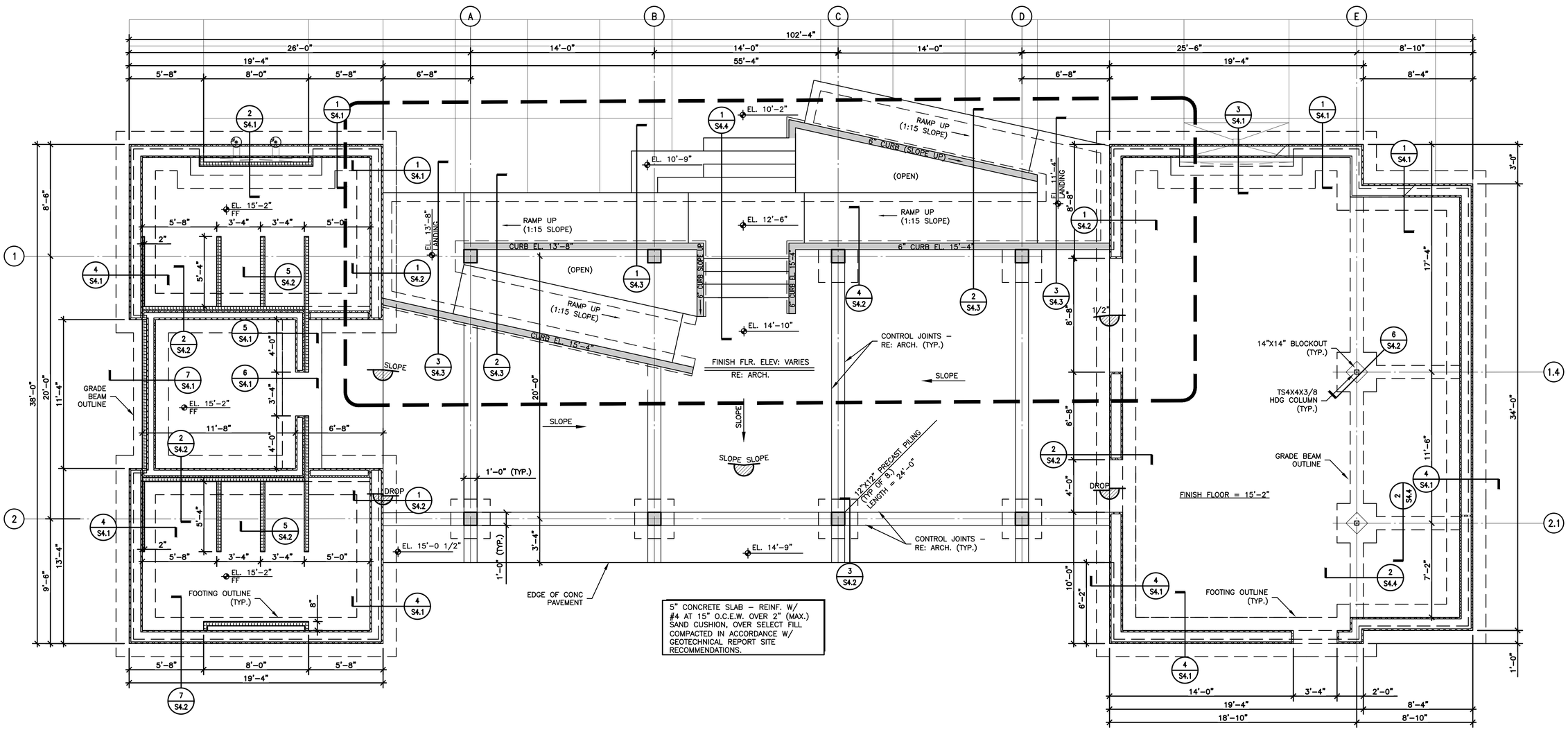

LEGEND

- CMU BLOCK WALL
- GLAZED TILE BLOCK WALL
- REINFORCED CONCRETE STEMWALL/FOOTING
- FOOTING OUTLINE
- EL. 14'-9" SPOT ELEVATION

FOUNDATION PLAN

SCALE: 1/4"=1'-0"

GALVESTON COUNTY
BEACH PAVILION
CRYSTAL BEACH, TX 77650

BE–Arc LLC Project No : C–13–007.01

SHELMARK ENGINEERING, L.L.C.
CIVIL | MARINE | PLANNING | INFRASTRUCTURE
920 FM 517 ROAD EAST | DICKINSON, TEXAS 77539
TX FIRM NO. F-2121

easterwood ARCHITECTS STUDIO
409-354-8976
EASTERWOOD@BE-ARC.COM
2328 BALL STREET
GALVESTON TEXAS 77550

DATE	REVISION

STATE OF TEXAS
MARCUS J. MICHNA
84739
LICENSED PROFESSIONAL ENGINEER
8-24-18

BID SET

DATE ISSUED: 08/24/2018

COPYRIGHT 2018

S1.2

FOUNDATION PLAN

COUNTY APPROVAL:
SIGNATURE _____ DATE_____

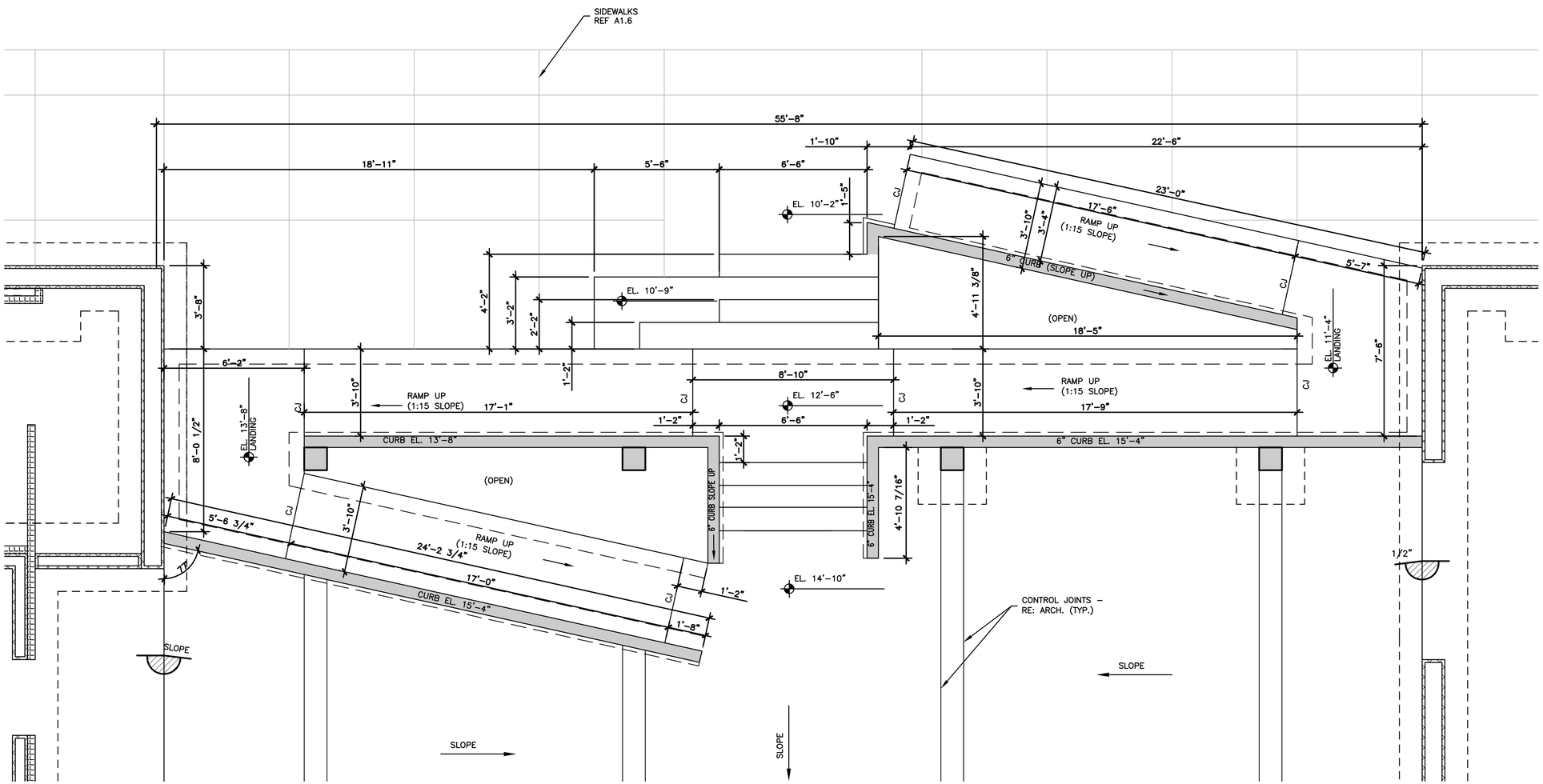

NOTE;
HANDRAILS NOT SHOWN FOR CLARITY.
REFER TO ARCH. PLANS

ENLARGED RAMP / STAIR FOUNDATION PLAN

SCALE: 3/8"=1'-0"

GALVESTON COUNTY
BEACH PAVILION
CRYSTAL BEACH, TX 77650

BE-Arc LLC Project No : C-13-007.01

SHELMARK ENGINEERING, L.L.C.
CIVIL | MARINE | PLANNING | STRUCTURAL
920 FM 517 ROAD EAST | DICKINSON, TEXAS 77539
TX FIRM NO. F-2124

eas easterwood ARCHITECTS STUDIO
2328 BALL STREET
GALVESTON TEXAS 77550
409-354-8976
EASTERWOOD@BE-ARC.COM

DATE	REVISION

STATE OF TEXAS
MARCUS J. MICHNA
84739
LICENSED
PROFESSIONAL ENGINEER
8-24-18

BID SET

DATE ISSUED: 08/24/2018

COPYRIGHT 2018

S1.3

ENLARGED RAMP-STAIR FOUNDATION PLAN

COUNTY APPROVAL:
SIGNATURE _____ DATE_____

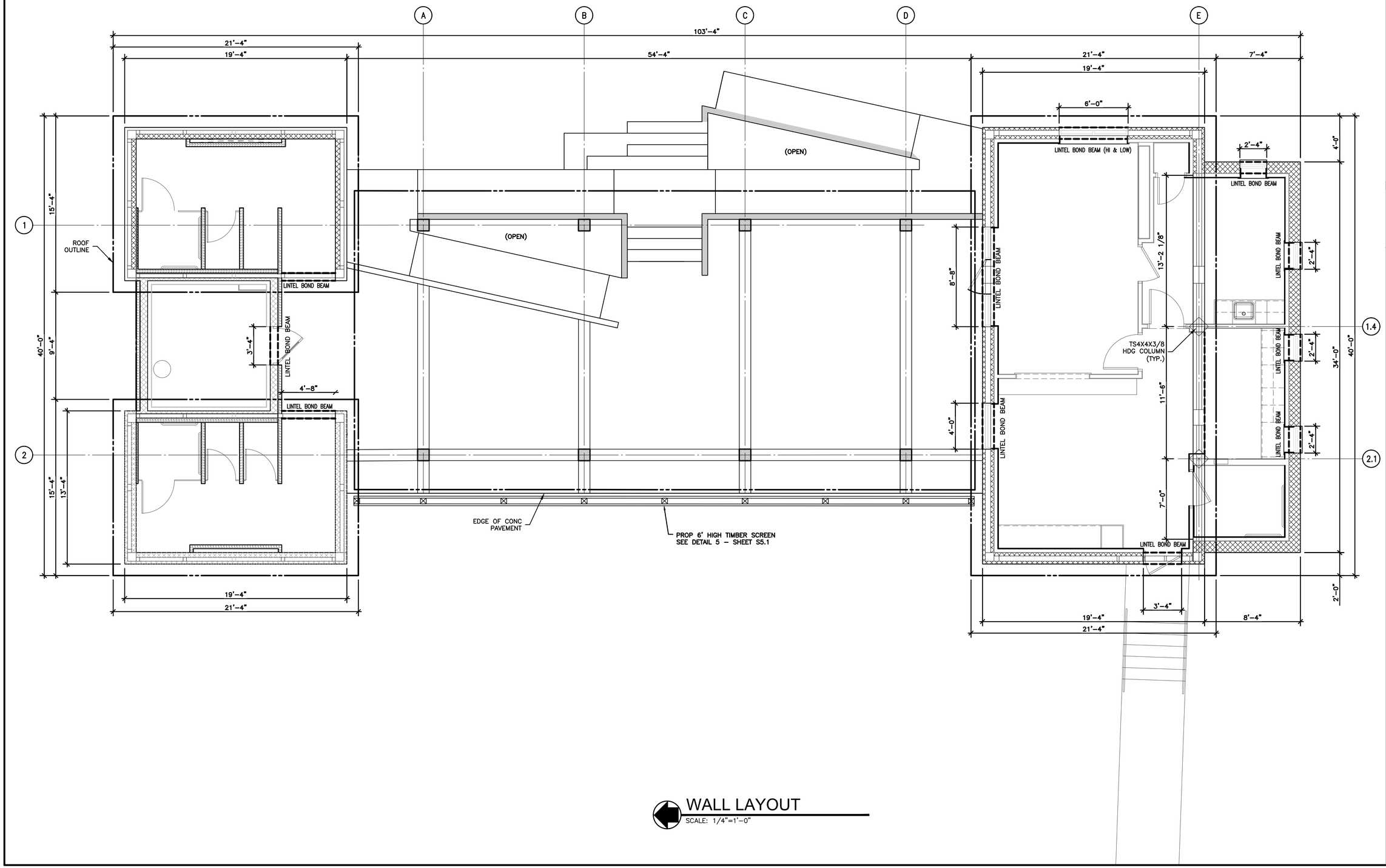

WALL LAYOUT

SCALE: 1/4"=1'-0"

GALVESTON COUNTY
BEACH PAVILION
CRYSTAL BEACH, TX 77650

BE–Arc LLC Project No : C–13–007.01

SHELMARK ENGINEERING, L.L.C.
CIVIL | MARINE | PLANNING | PROJECT MGMT.
920 FM 517 ROAD EAST | DICKINSON, TEXAS 77539
TX FIRM NO. F-2121

eas easterwood ARCHITECTS STUDIO
2328 BALL STREET
GALVESTON TEXAS 77550
409-354-8976
EASTERWOOD@BE-ARC.COM

DATE	REVISION

STATE OF TEXAS
MARCUS J. MICHNA
84739
LICENSED
PROFESSIONAL ENGINEER
8-24-18

BID SET

DATE ISSUED: 08/24/2018

COPYRIGHT 2018

S2.1

WALL LAYOUT

COUNTY APPROVAL:
SIGNATURE _____ DATE_____

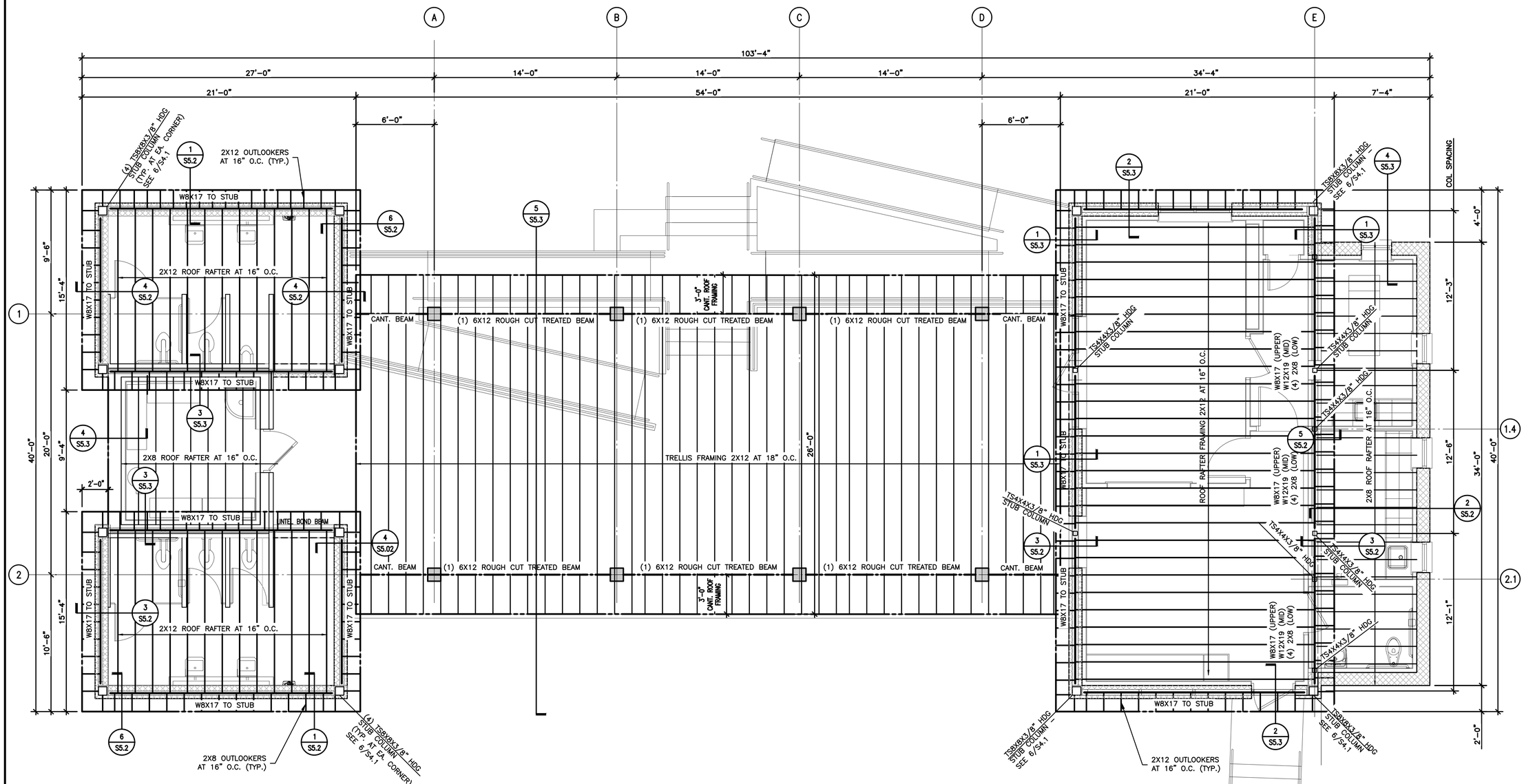

ROOF FRAMING PLAN
SCALE: 1/4"=1'-0"

GALVESTON COUNTY
BEACH PAVILION
CRYSTAL BEACH, TX 77650

BE-Arc LLC Project No : C-13-007.01

SHELMARK ENGINEERING, L.L.C.
CIVIL | MARINE | PLANNING | PROJECT MGMT.
920 FM 517 ROAD EAST | DICKINSON, TEXAS 77539
TX FIRM NO. F-2121

eas easterwood ARCHITECTS STUDIO
2328 BALL STREET
GALVESTON TEXAS 77550
409-354-8976
EASTERWOOD@BE-ARC.COM

DATE	REVISION

STATE OF TEXAS
MARCUS J. MICHNA
84739
LICENSED
PROFESSIONAL ENGINEER
8-24-18

BID SET

DATE ISSUED: 08/24/2018

COPYRIGHT 2018

S3.1

ROOF FRAMING PLAN

COUNTY APPROVAL:
SIGNATURE _____ DATE_____

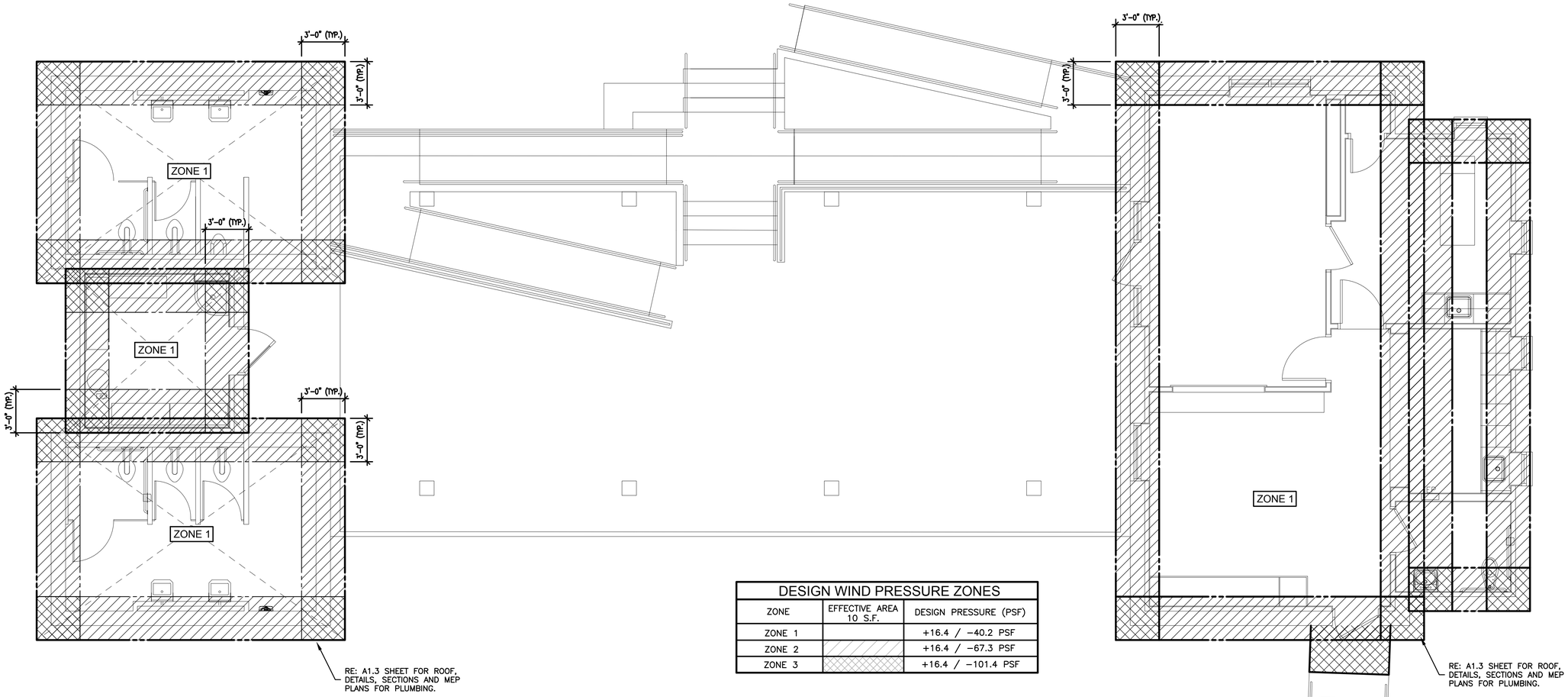

DESIGN WIND PRESSURE ZONES		
ZONE	EFFECTIVE AREA 10 S.F.	DESIGN PRESSURE (PSF)
ZONE 1		+16.4 / −40.2 PSF
ZONE 2		+16.4 / −67.3 PSF
ZONE 3		+16.4 / −101.4 PSF

ROOF PLAN - DESIGN PRESSURE ZONES

SCALE: 1/4"=1'-0"

GALVESTON COUNTY
BEACH PAVILION
CRYSTAL BEACH, TX 77650

BE–Arc LLC Project No : C–13–007.01

SHELMARK ENGINEERING, L.L.C.
CIVIL | MARINE | PLANNING | STRUCTURAL
920 FM 517 ROAD EAST | DICKINSON, TEXAS 77539
TX FIRM NO. F-2121

eas easterwood ARCHITECTS STUDIO
2328 BALL STREET
GALVESTON TEXAS 77550
409-354-8976
EASTERWOOD@BE-ARC.COM

DATE	REVISION

STATE OF TEXAS
MARCUS J. MICHNA
84739
LICENSED
PROFESSIONAL ENGINEER
8-24-18

BID SET

DATE ISSUED: 08/24/2018

COPYRIGHT 2018

S3.2

ROOF DESIGN PRESSURE PLAN

COUNTY APPROVAL:
SIGNATURE _____ DATE_____

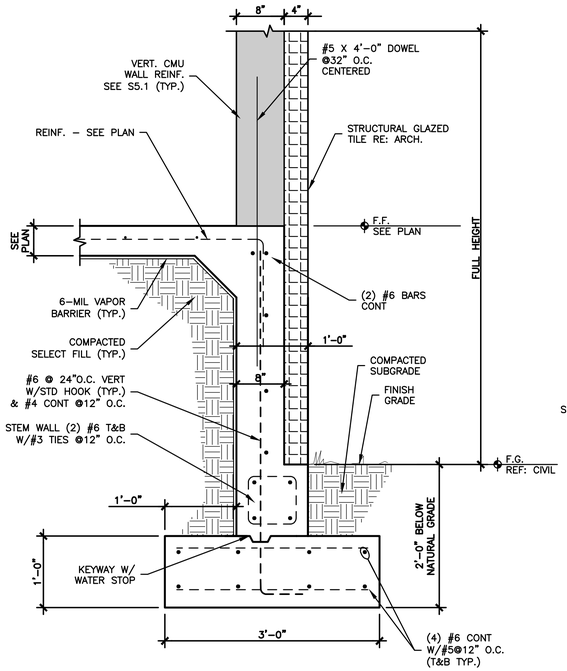

7 SECTION at STEM WALL & FOOTING

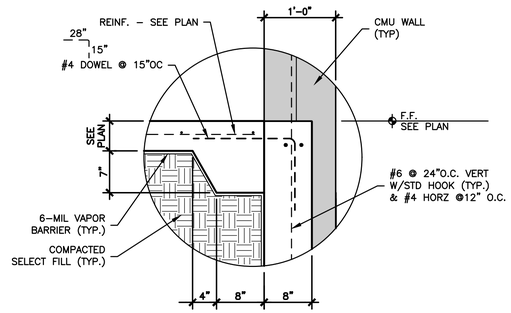

OPTIONAL CONNECTION

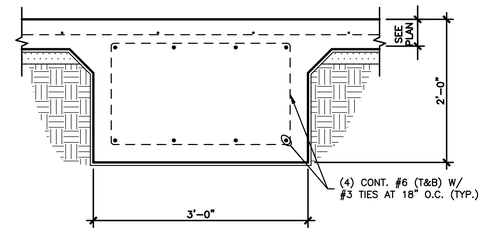

6 SECTION at GRADE BEAM

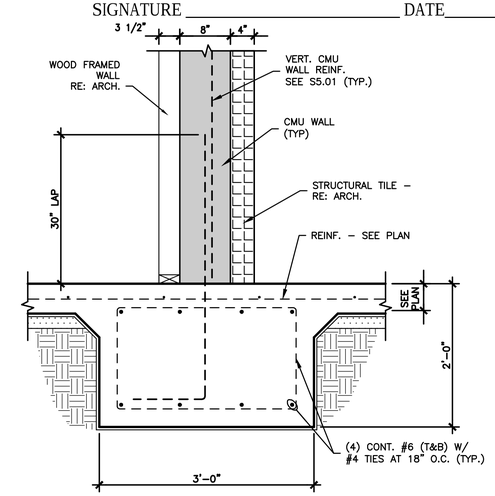

5 SECTION at GRADE BEAM

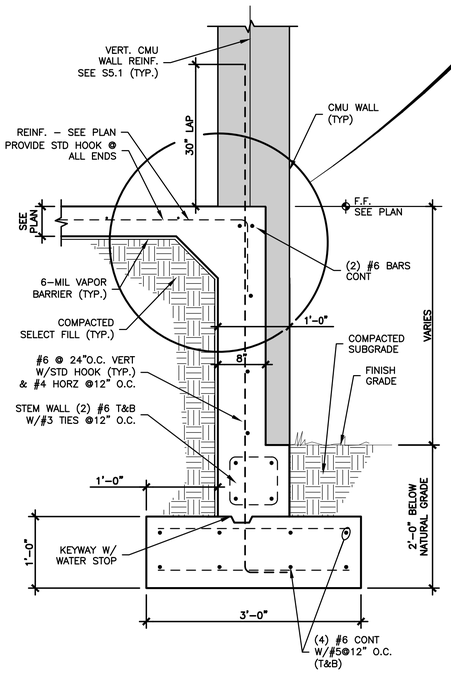

4 SECTION at STEM WALL and FOOTING

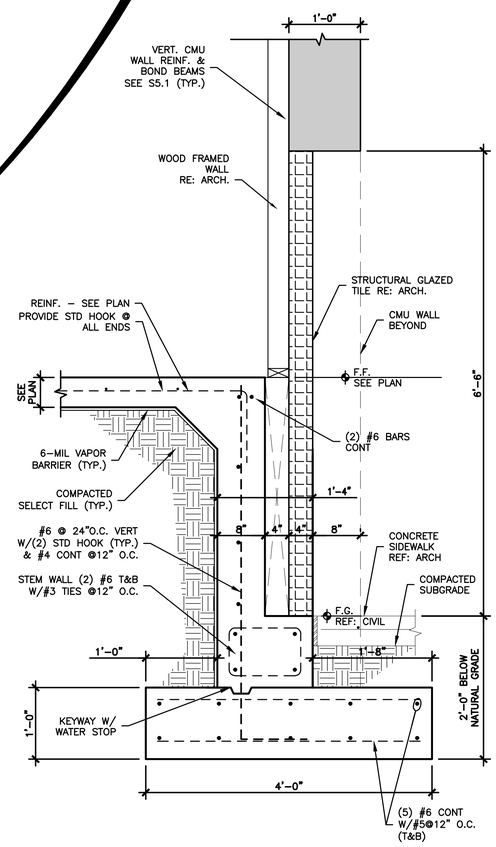

3 SECTION at STEM WALL and FOOTING

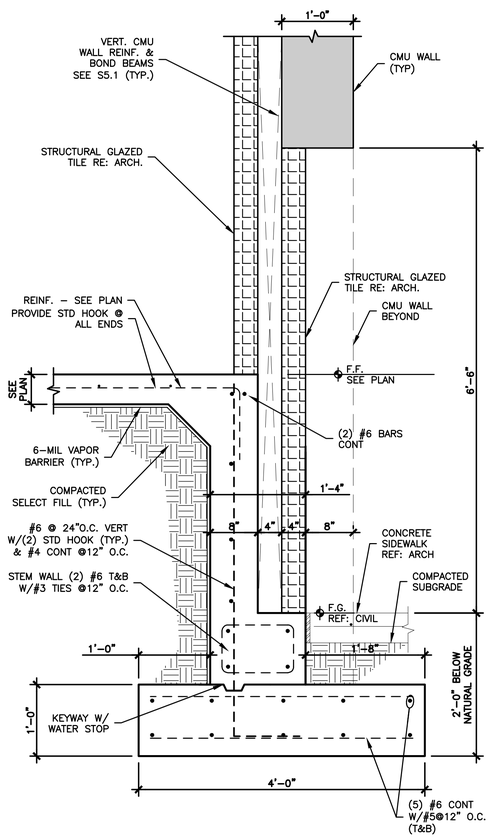

2 SECTION at STEM WALL and FOOTING

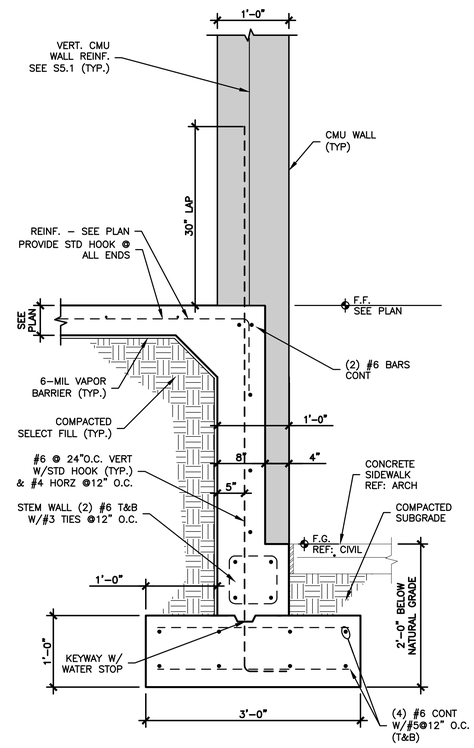

1 SECTION at STEM WALL and FOOTING

GALVESTON COUNTY
BEACH PAVILION
CRYSTAL BEACH, TX 77650

BE–Arc LLC Project No : C–13–007.01

SHELMARK ENGINEERING, L.L.C.
CIVIL | MARINE | PLANNING | INTERNATIONAL
521 FM 517 ROAD EAST | DICKINSON, TEXAS 77539
TX FIRM NO. F-12272

easterwood ARCHITECTS STUDIO
2328 BALL STREET
GALVESTON TEXAS 77550
409-354-8976
EASTERWOOD@BE-ARC.COM

DATE	REVISION

STATE OF TEXAS
HAROLD D MICHNA
84739
LICENSED PROFESSIONAL ENGINEER

BID SET

DATE ISSUED: 08/24/2018

COPYRIGHT 2018

S4.1

FOUNDATION DETAILS

COUNTY APPROVAL:
SIGNATURE _____ DATE_____

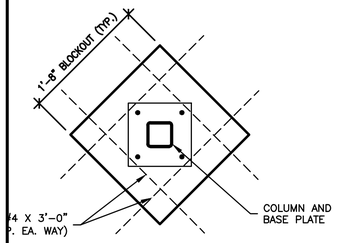

A DETAIL - BLOCKOUT (TYP)

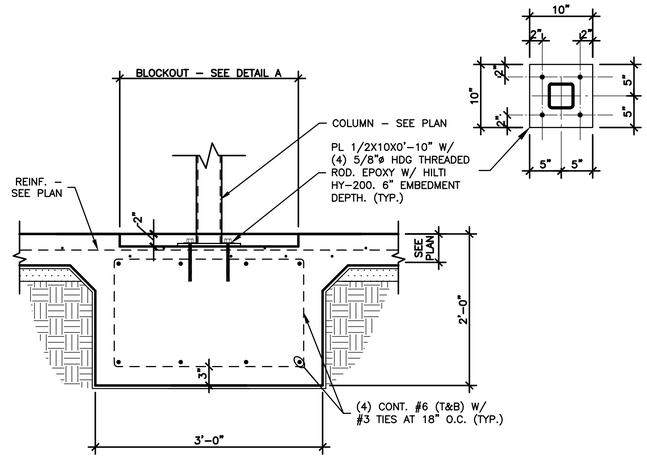

6 SECTION at GRADE BEAM

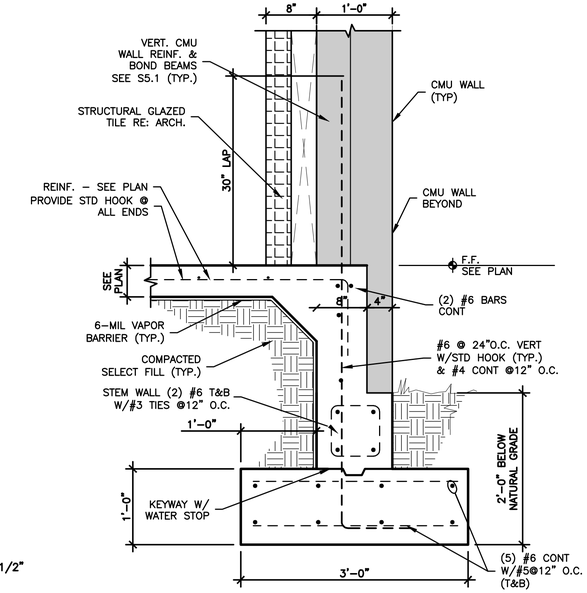

7 SECTION at STEM WALL and FOOTING

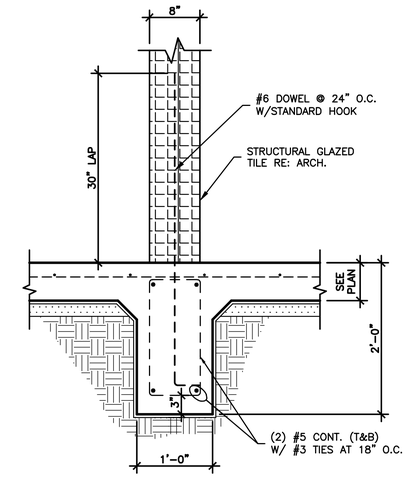

5 SECTION at INTERIOR WALL

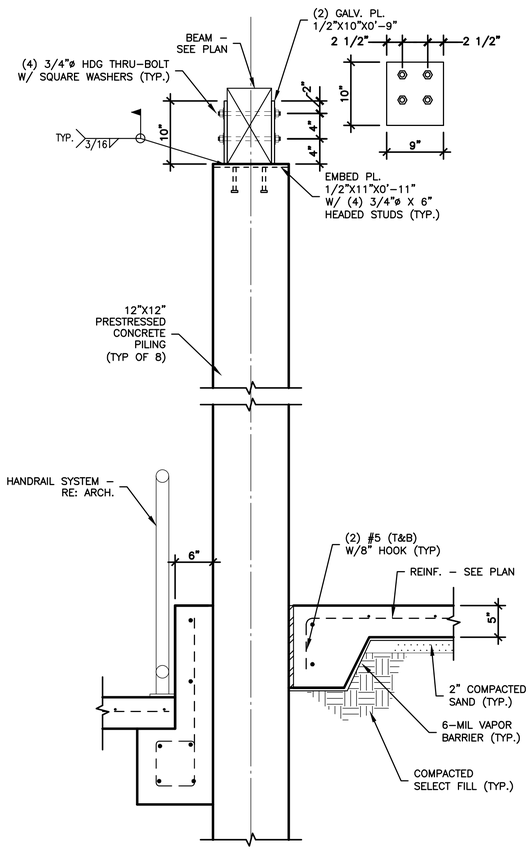

4 SECTION at COLUMN & RAMP

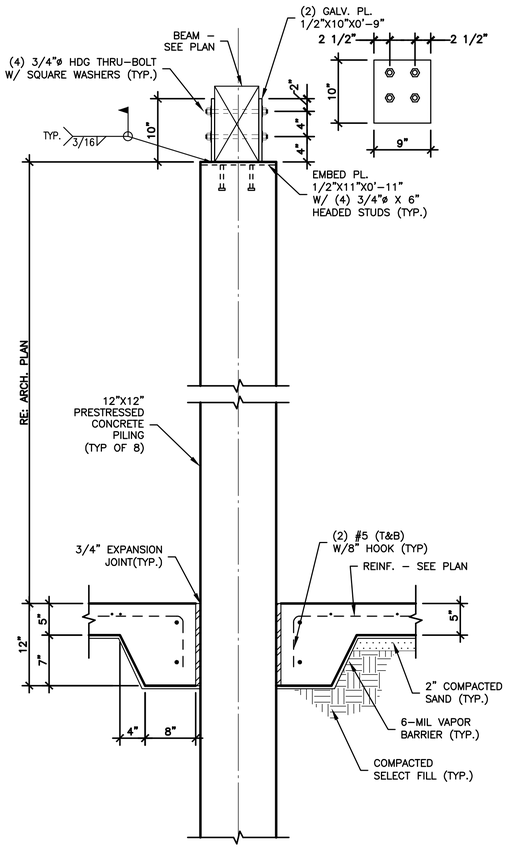

3 SECTION at COLUMN

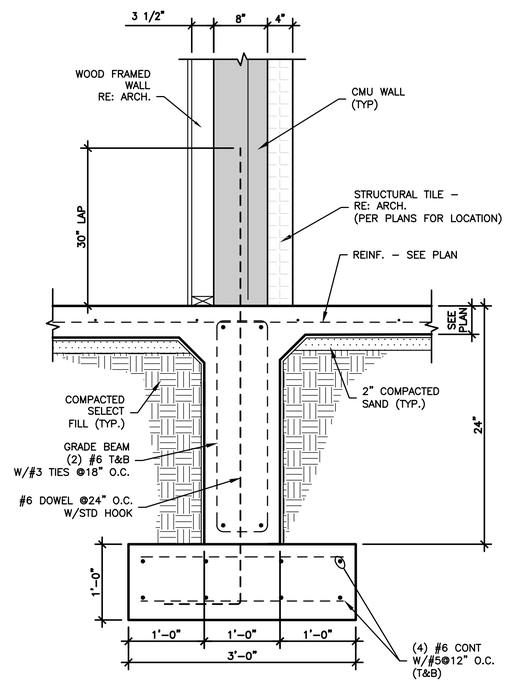

2 SECTION at STEM WALL and FOOTING

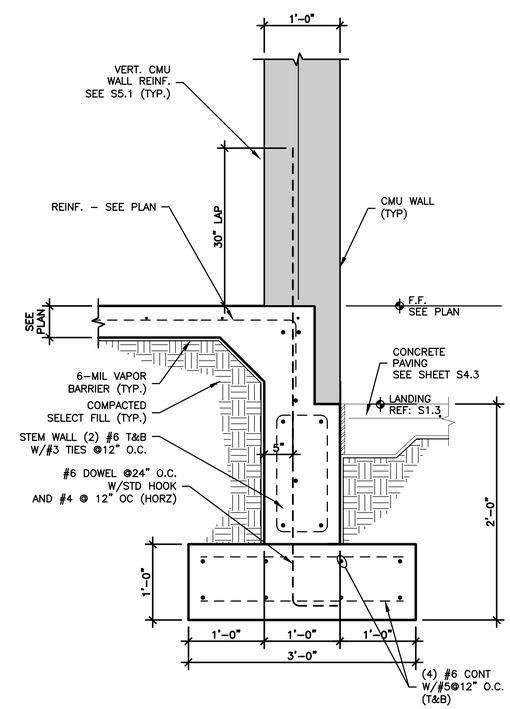

1 SECTION at STEM WALL and FOOTING

GALVESTON COUNTY
BEACH PAVILION
CRYSTAL BEACH, TX 77650

BE-Arc LLC Project No : C-13-007.01

SHELMARK ENGINEERING, L.L.C.
CIVIL | MARINE | PLANNING | STRUCTURAL
920 FM 517 ROAD EAST | DICKINSON, TEXAS 77539
TX FIRM NO. F-2123

easterwood ARCHITECTS STUDIO
2328 BALL STREET
GALVESTON TEXAS 77550
409-354-8976
EASTERWOOD@BE-ARC.COM

DATE	REVISION

STATE OF TEXAS
MARCUS J. MICHNA
84739
LICENSED
PROFESSIONAL ENGINEER
8-24-18

BID SET

DATE ISSUED: 08/24/2018

COPYRIGHT 2018

S4.2

FOUNDATION DETAILS

COUNTY APPROVAL:
SIGNATURE _____ DATE_____

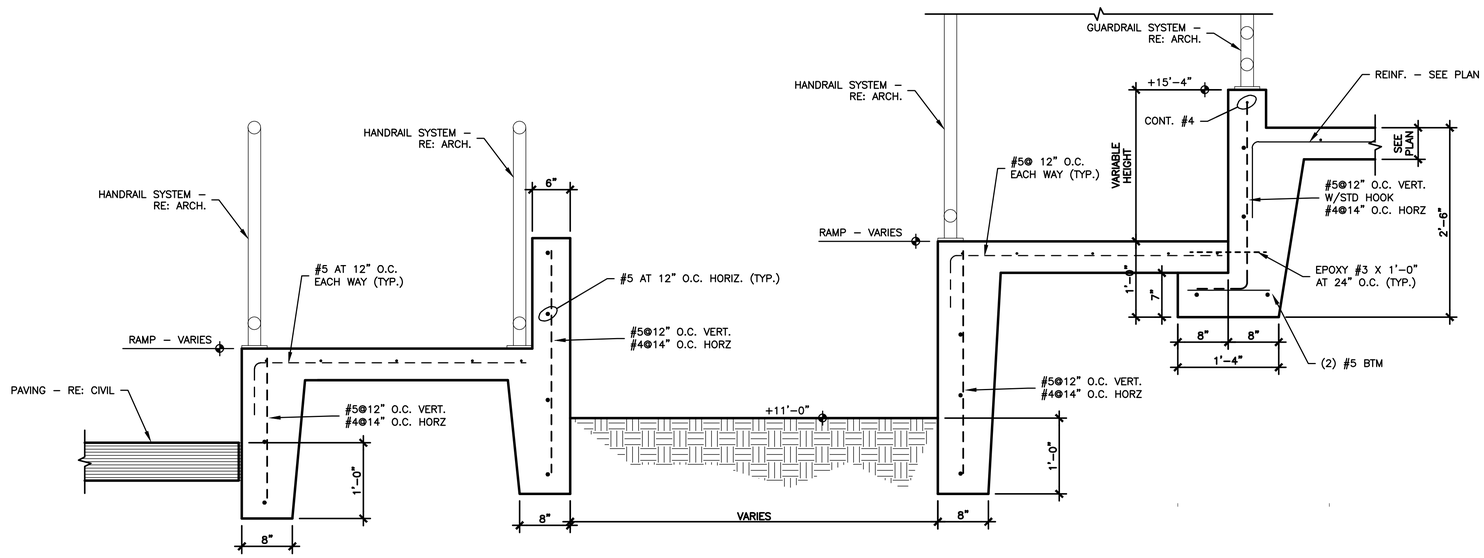

2 SECTION

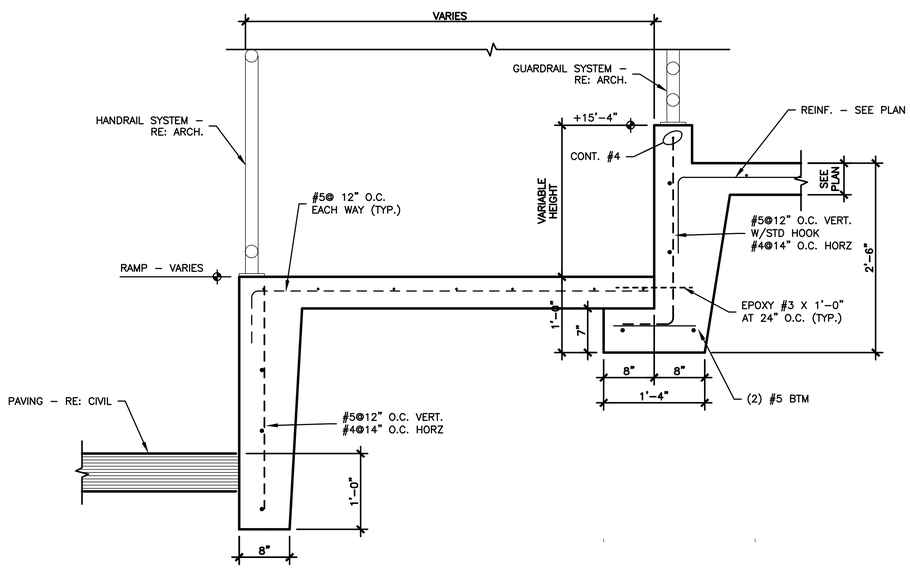

3 SECTION - LANDING

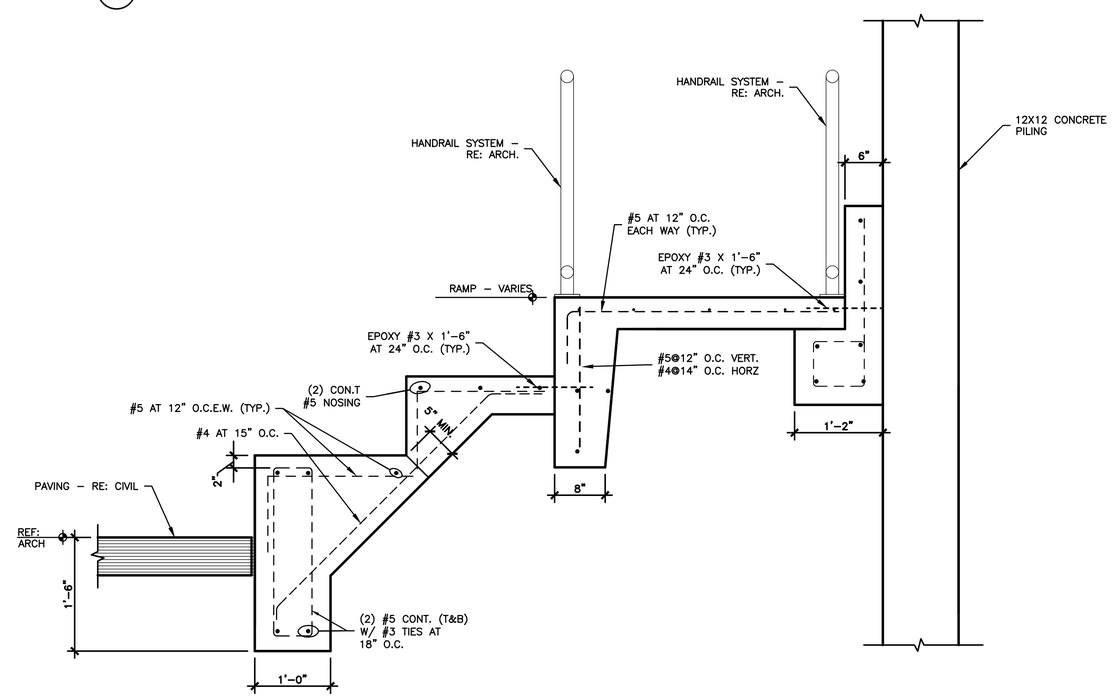

1 SECTION

GALVESTON COUNTY
BEACH PAVILION
CRYSTAL BEACH, TX 77650

BE–Arc LLC Project No : C–13–007.01

SHELMARK ENGINEERING, L.L.C.
CIVIL | MARINE | PLANNING | STRUCTURAL
920 FM 517 ROAD EAST | DICKINSON, TEXAS 77539
TX FIRM NO. F-2153

eas easterwood ARCHITECTS STUDIO
2328 BALL STREET
GALVESTON TEXAS 77550
409-354-8976
EASTERWOOD@BE-ARC.COM

DATE	REVISION

STATE OF TEXAS
MARCUS J. MICHNA
84739
LICENSED
PROFESSIONAL ENGINEER
8-24-18

BID SET

DATE ISSUED: 08/24/2018

COPYRIGHT 2018

S4.3

FOUNDATION DETAILS

COUNTY APPROVAL:
SIGNATURE _____ DATE_____

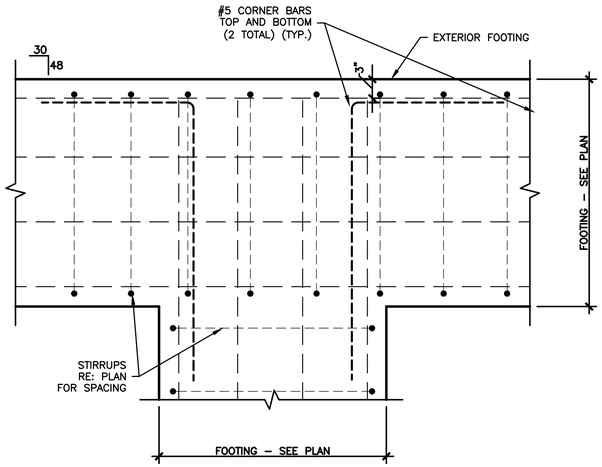

6 FOOTING REINFORCEMENT DETAIL

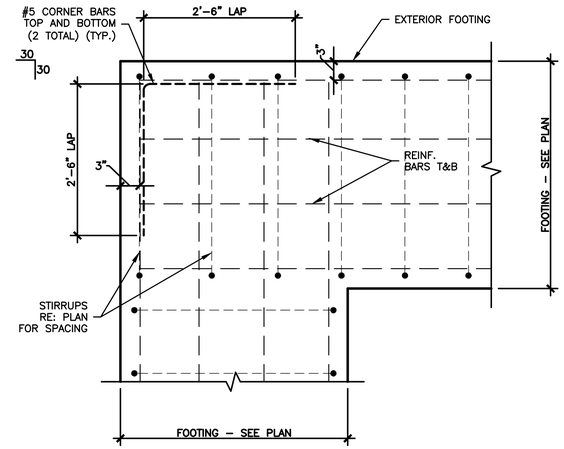

5 FOOTING REINFORCEMENT DETAIL

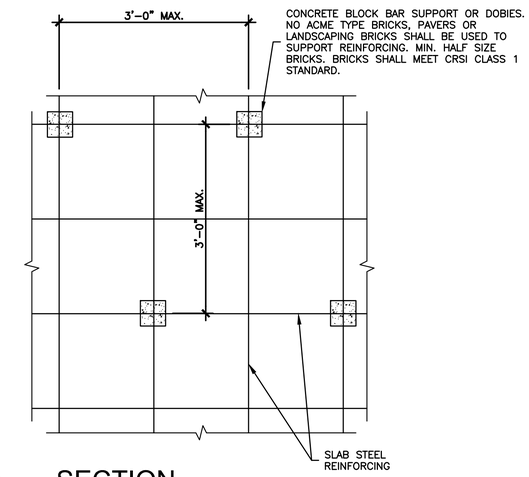

4 SECTION

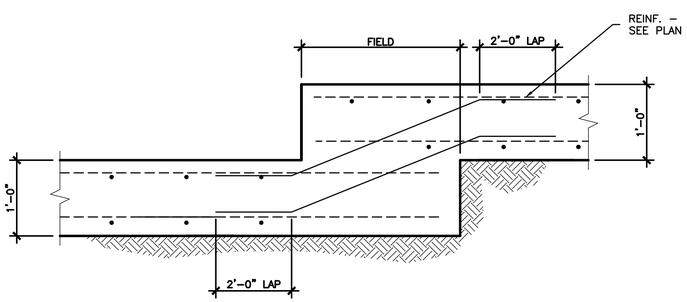

3 SECTION - STEPPED FOOTING

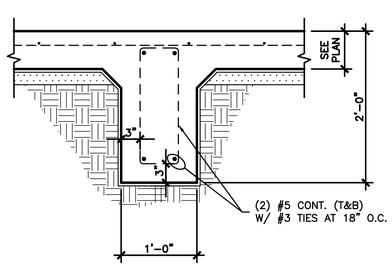

2 SECTION - GRADE BEAM

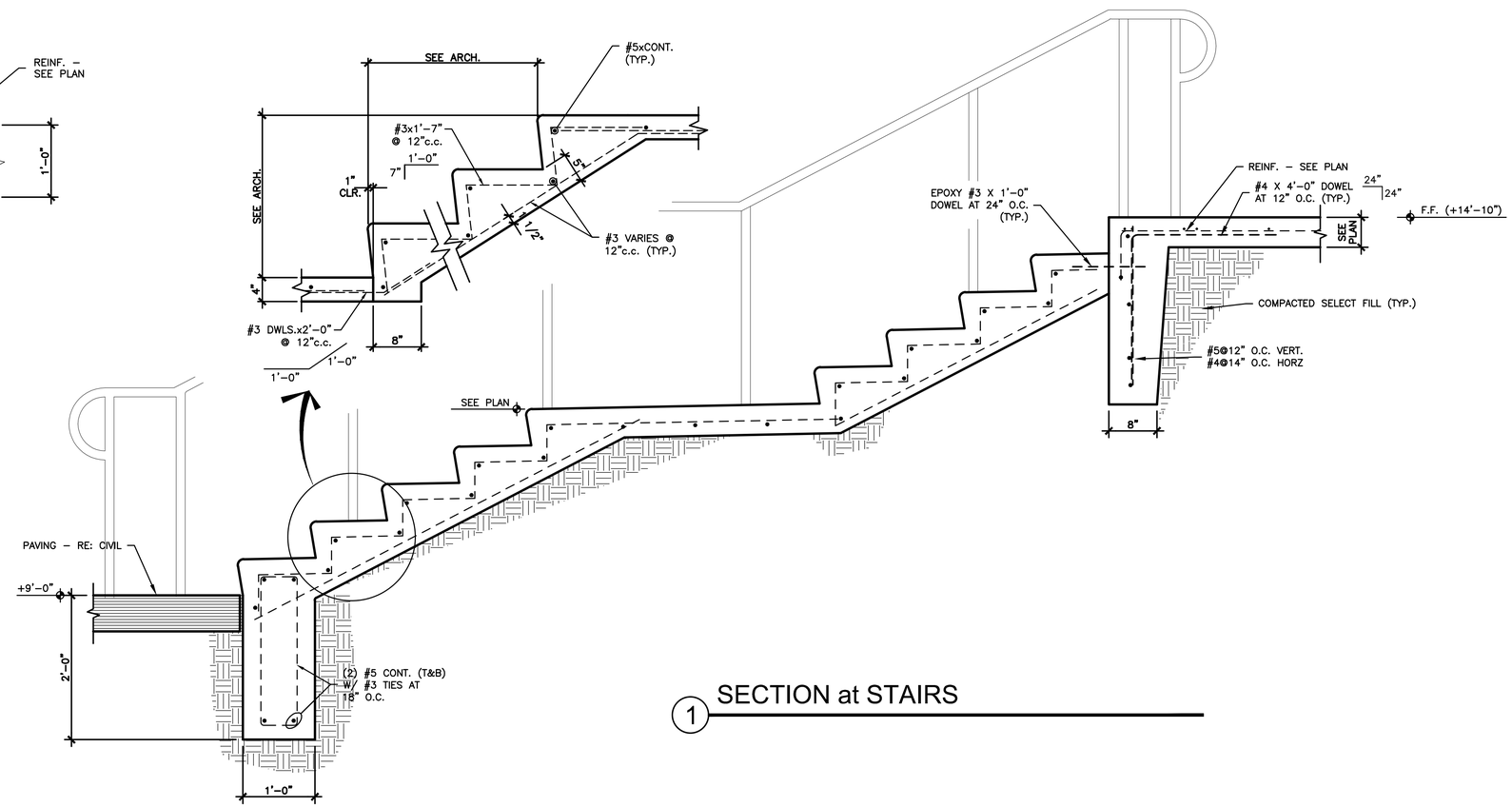

1 SECTION at STAIRS

GALVESTON COUNTY
BEACH PAVILION
CRYSTAL BEACH, TX 77650

BE–Arc LLC Project No : C–13–007.01

SHELMARK ENGINEERING, L.L.C.
CIVIL | MARINE | PLANNING | PROJECT MGMT.
920 FM 517 ROAD EAST | DICKINSON, TEXAS 77539
TX FIRM NO. F-2215

easterwood ARCHITECTS STUDIO
2328 BALL STREET
GALVESTON TEXAS 77550
409-354-8976
EASTERWOOD@BE-ARC.COM

DATE	REVISION

STATE OF TEXAS
MARCUS J. MICHNA
84739
LICENSED
PROFESSIONAL ENGINEER
8-24-18

BID
SET

DATE ISSUED: 08/24/2018

COPYRIGHT 2018

S4.4

FOUNDATION DETAILS

COUNTY APPROVAL:
SIGNATURE _____ DATE_____

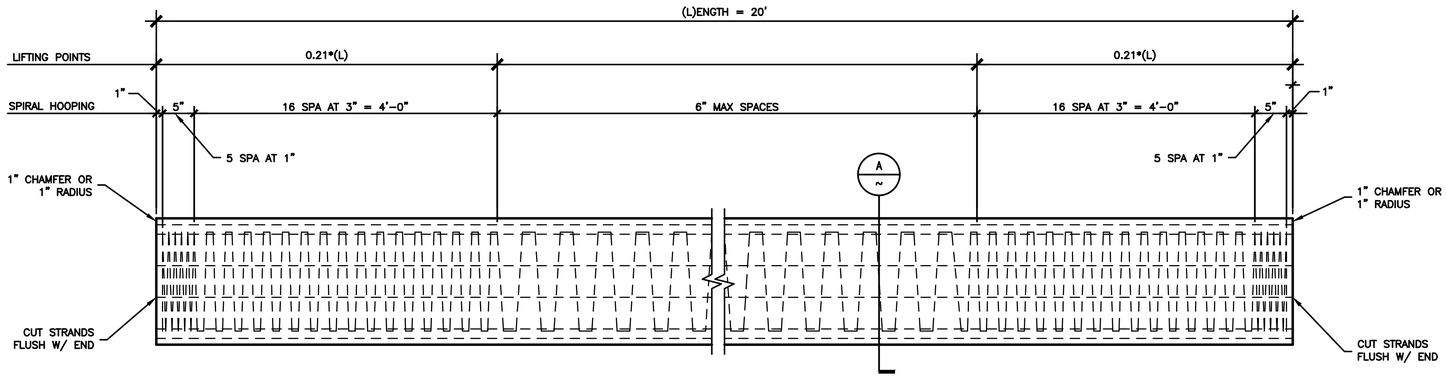

2 DETAIL OF PILING

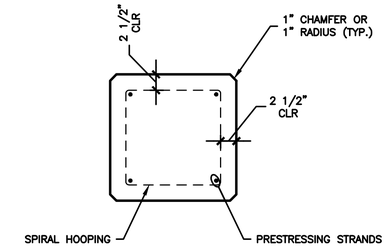

1 SECTION A-A

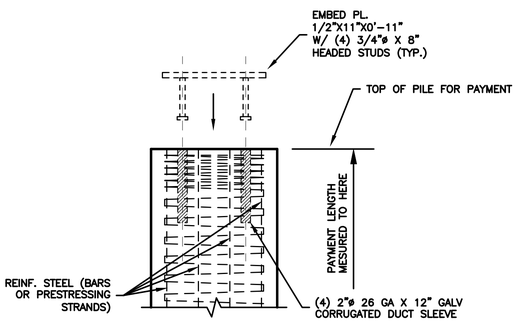

3 END PLATE CONNECTION
or STANDARD PRESTRESSED PILE

GENERAL NOTES:

1. CONCRETE FOR PRESTRESSED PILING SHALL BE CLASS "H" CONCRETE.
   1.1. RELEASE STRENGTH FOR CLASS H = 4,000 PSI.
   1.2. MINIMUM COMPRESSIVE STRENGTH 28 DAY (f'c) = 5,000 PSI.
2. ALL PILING TO BE CAST WITH CONCRETE USING TYPE II CEMENT.
3. ALL DIMENSIONS RELATING TO PRE-STRESSING STEEL ARE TO CENTER OF BARS AND STRANDS.
4. ALL CORNERS SHALL BE CHAMFERED AS SHOWN OR NOTED.
5. SIZE, NUMBER, AND LENGTH OF PILING SHALL BE AS SHOWN ON LAYOUT SHEETS.
6. SPIRAL HOOPING SHALL HAVE A MINIMUM DIAMETER OF 0.207".
7. PRESTRESSING STRANDS SHALL BE SEVEN-WIRE 1/2" 270K LOW RELAXATION STRANDS TENSIONED TO 31.0 KIPS EACH.
8. PILING SHALL BE HELD FIRMLY IN THE HORIZONTAL POSITION THROUGHOUT AS LIFTING AND HANDLING OPERATIONS.

PROPERTIES FOR PRESTRESSED CONCRETE PILING

PILE SIZE "D"	HOLE SIZE "H"	AREA OF PILE SECTION	I	WEIGHT	PRESTRESSING		
					NO.	INITIAL PRESTRESS FORCE	CONCRETE FINAL PRESTRESS
		SQ. IN.	IN.^{4}	LB./FT.		KIPS	(15% LOSS)
12"	NONE	142	1,680	148	4	173	742

CLASSES OF CONCRETE

CLASS OF CONCRETE	CEMENT PER C.Y. MIN. (SACKS)	MIN. COMP. STRENGTH (f'c) 28 DAY PSI	MIN. FLEX. STRENGTH 7 DAY PSI	MAX. WATER CEMENT RATIO GAL/ SK	COARSE AGGR. GRADE NO.
H	6.0	5,000 PSI	N.A.	5.5	3-4 5-6

GALVESTON COUNTY
BEACH PAVILION
CRYSTAL BEACH, TX 77650

BE-Arc LLC Project No : C-13-007.01

SHELMARK ENGINEERING, L.L.C.
CIVIL | MARINE | PLANNING | STRUCTURAL
920 FM 517 ROAD EAST | DICKINSON, TEXAS 77539
TX FIRM NO. F-2215

easterwood ARCHITECTS STUDIO
2328 BALL STREET
GALVESTON TEXAS 77550
409-354-8976
EASTERWOOD@BE-ARC.COM

DATE	REVISION

STATE OF TEXAS
MARCUS J. MICHNA
84739
LICENSED
PROFESSIONAL ENGINEER
8-24-18

BID SET

DATE ISSUED: 08/24/2018

COPYRIGHT 2018

S4.5

PRESTRESSED CONCRETE PILING

COUNTY APPROVAL:
SIGNATURE _____ DATE_____

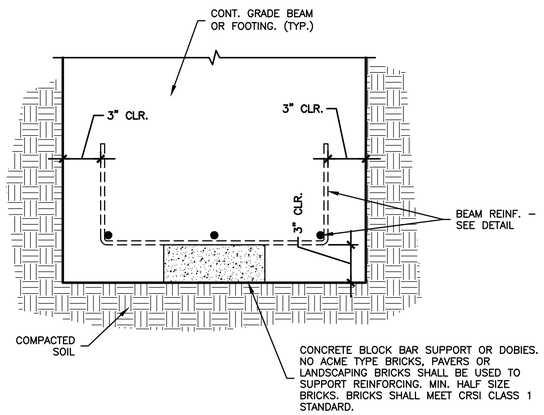

5 CONCRETE BLOCK REBAR SUPPORT DETAIL SCALE: N.T.S.

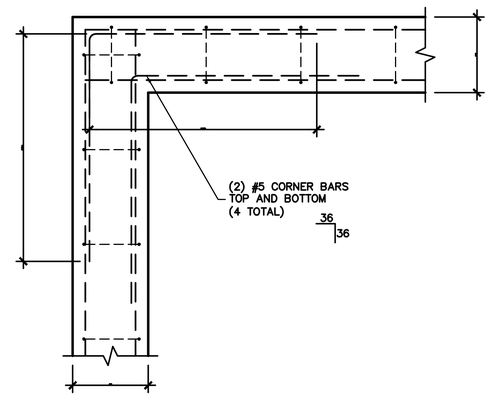

4 SECTION at GRADE BEAM CORNER

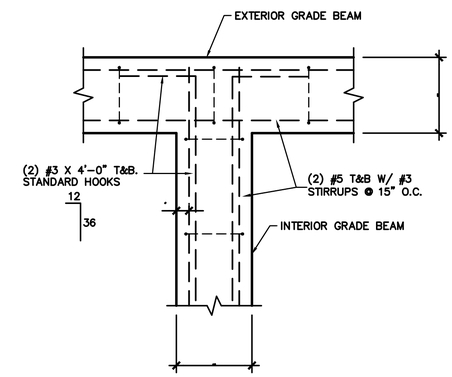

3 TYPICAL GRADE BEAM INTERSECTION DETAIL

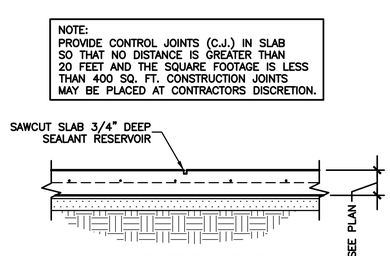

2 SLAB JOINT DETAILS SCALE: N.T.S.

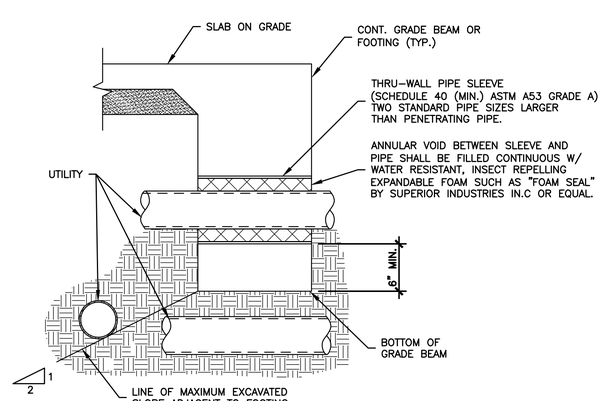

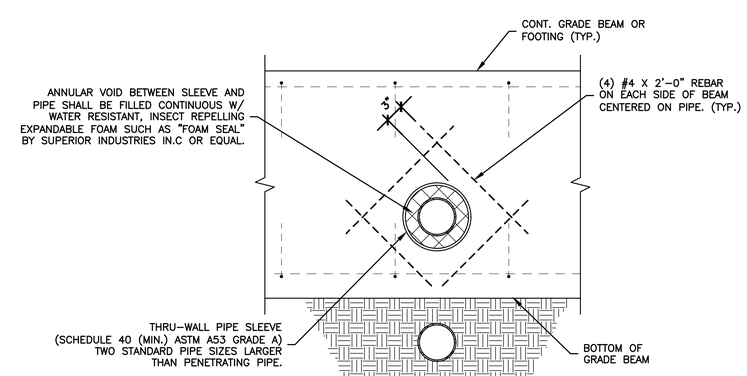

1 TYPICAL UTILITY PENETRATION THROUGH GRADE BEAM/FOOTING SCALE: N.T.S.

GALVESTON COUNTY
BEACH PAVILION
CRYSTAL BEACH, TX 77650

BE–Arc LLC Project No : C–13–007.01

SHELMARK ENGINEERING, L.L.C.
CIVIL | MARINE | PLANNING | PROJECT MGMT.
920 FM 517 ROAD EAST | DICKINSON, TEXAS 77539
TX FIRM NO. F-2121

easterwood ARCHITECTS STUDIO
2328 BALL STREET
GALVESTON TEXAS 77550
409-354-8976
EASTERWOOD@BE-ARC.COM

DATE	REVISION

STATE OF TEXAS
MARCUS J. MICHNA
84739
LICENSED
PROFESSIONAL ENGINEER
8-24-18

BID SET

DATE ISSUED: 08/24/2018

COPYRIGHT 2018

S4.6

FOUNDATION DETAILS

COUNTY APPROVAL:
SIGNATURE _____ DATE_____

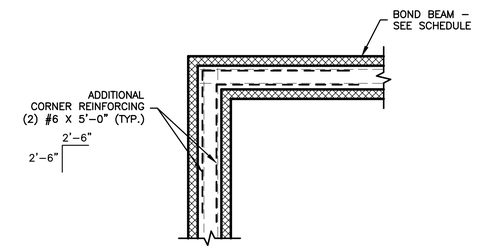

2 DETAIL - BOND BEAM CORNER DETAIL

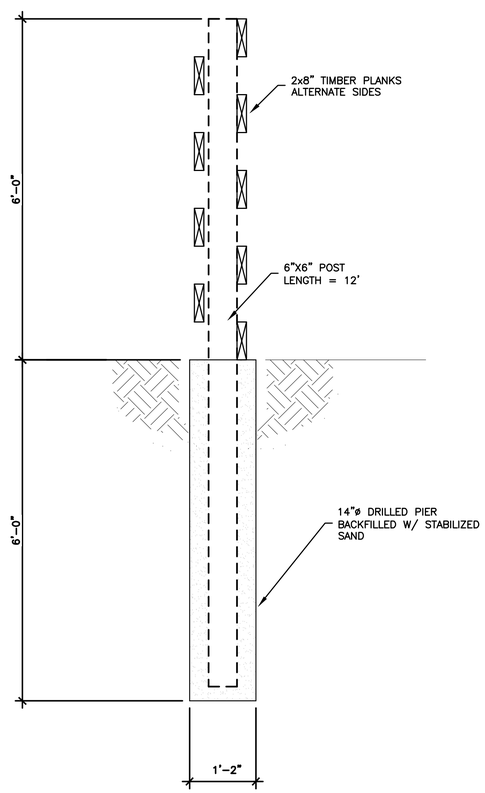

5 TIMBER FENCE

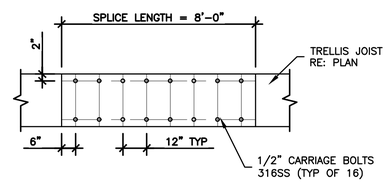

4 TRELLIS JOIST SPLICE

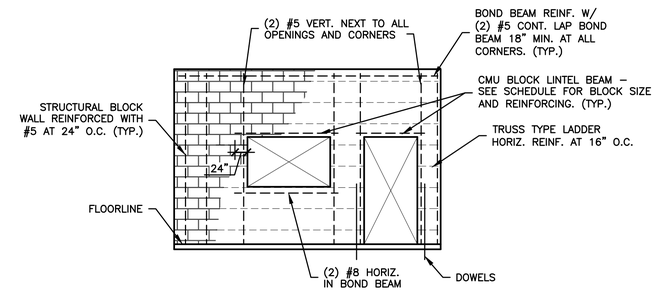

NOTE FOR STRUCTURAL BLOCK WALL:

1. ALL MASONRY GROUT SHALL BE PER SPECIFICATIONS.
2. FILL ALL REINFORCED CELLS WITH GROUT.
3. EXTEND LINTEL BEAM 24" BEYOND OPENING.
4. COMPRESSIVE STRENGTH OF MASONRY SHALL BE 1500 PSI AT 28 DAYS.
5. PROVIDE TRUSS TYPE LADDER REINFORCEMENT (HORZ) AT 16" O.C.

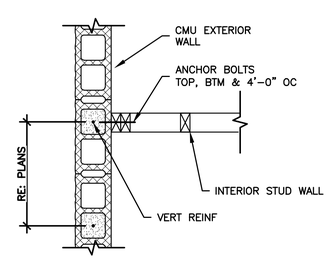

3 CMU-STUD WALL INTERSECTION

CONCRETE BLOCK LINTEL SCHEDULE

WALL THICKNESS \ MAXIMUM SPAN	4'–6"	9'–0"	12'–9"
4"	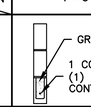	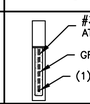	N/A
6" 8" & 12"	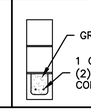	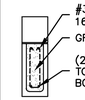	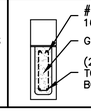

1 BLOCK WALL LINTEL SCHEDULE

GALVESTON COUNTY
BEACH PAVILION
CRYSTAL BEACH, TX 77650

BE–Arc LLC Project No : C–13–007.01

SHELMARK ENGINEERING, L.L.C.
CIVIL | MARINE | PLANNING | STRUCTURAL
920 FM 517 ROAD EAST | DICKINSON, TEXAS 77539
TX FIRM NO. F-2215

easterwood ARCHITECTS STUDIO
2328 BALL STREET
GALVESTON TEXAS 77550
409-354-8976
EASTERWOOD@BE-ARC.COM

DATE	REVISION

STATE OF TEXAS
MARCUS J. MICHNA
84739
LICENSED PROFESSIONAL ENGINEER
8-24-18

BID SET

DATE ISSUED: 08/24/2018

COPYRIGHT 2018

S5.1

BLOCK WALL DETAILS

COUNTY APPROVAL:
SIGNATURE _____ DATE_____

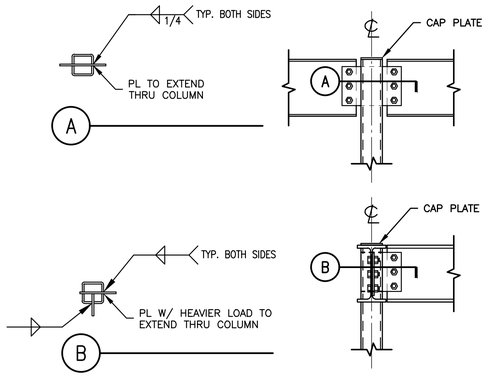

7 SIMPLE BEAM TO COL. CONNECTIONS

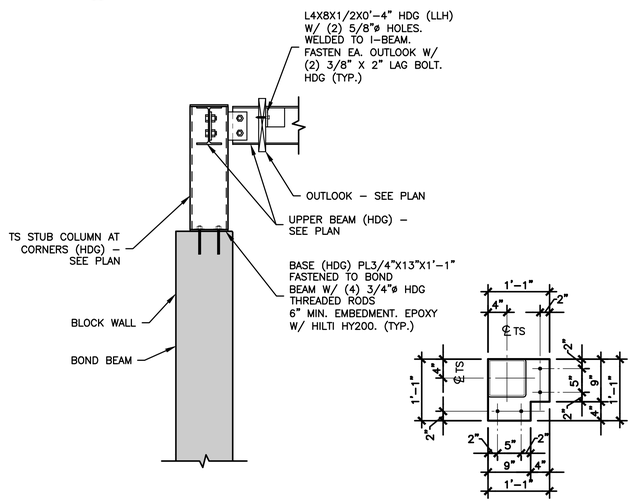

6 SECTION

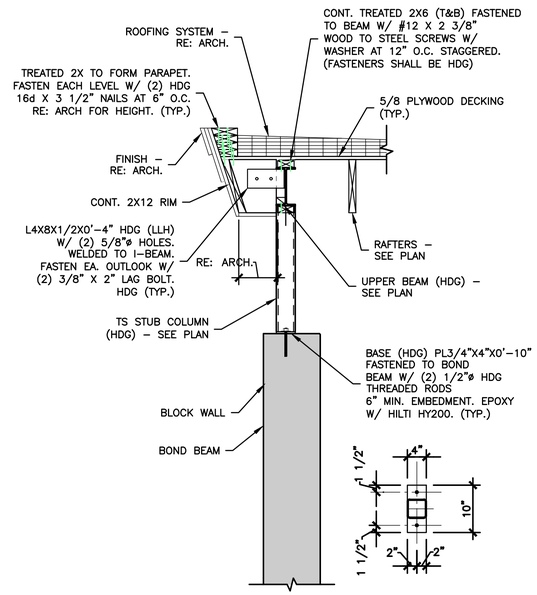

4 SECTION

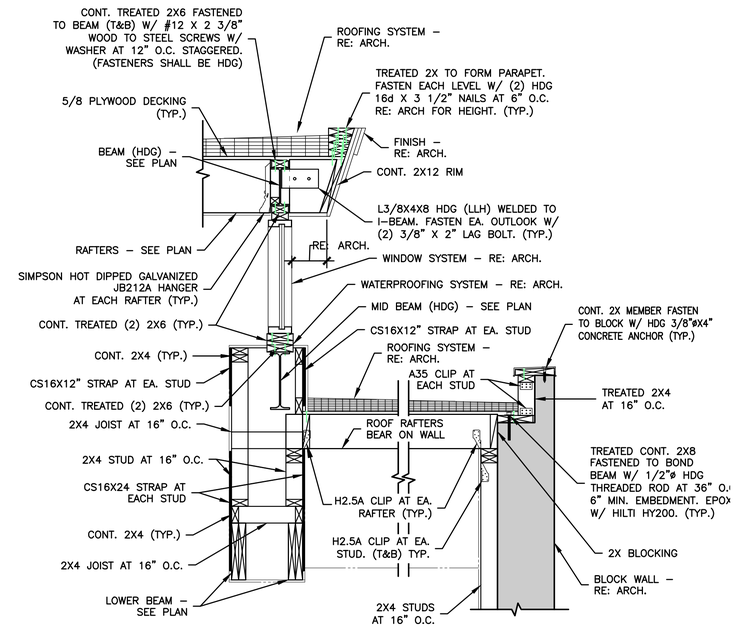

2 SECTION

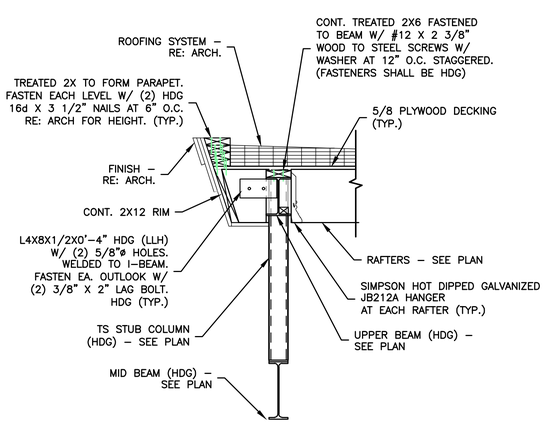

5 SECTION

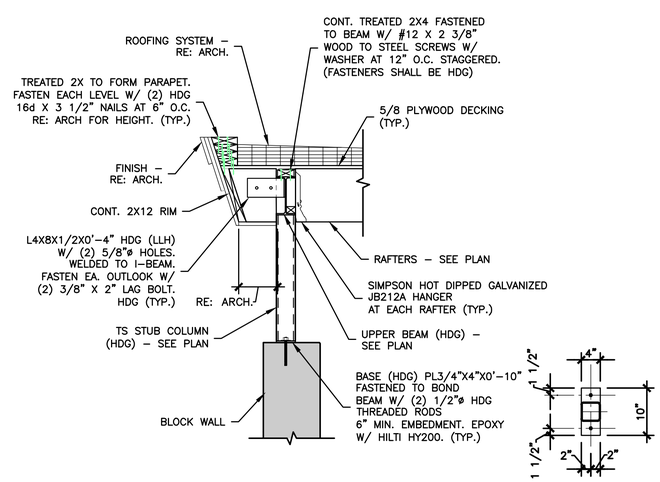

3 SECTION

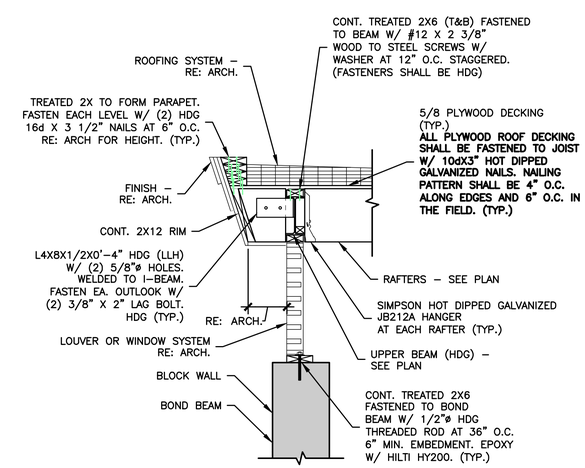

1 SECTION

GALVESTON COUNTY
BEACH PAVILION
CRYSTAL BEACH, TX 77650

BE–Arc LLC Project No : C–13–007.01

SHELMARK ENGINEERING, L.L.C.
CIVIL | MARINE | PLANNING | PERSONNEL
920 FM 517 ROAD EAST | DICKINSON, TEXAS 77539
TX FIRM NO. F-2124

easterwood ARCHITECTS STUDIO
2328 BALL STREET
GALVESTON TEXAS 77550
409-354-8976
EASTERWOOD@BE-ARC.COM

DATE	REVISION

STATE OF TEXAS
MARCUS J. MICHNA
84739
LICENSED PROFESSIONAL ENGINEER
8-24-18

BID SET

DATE ISSUED: 08/24/2018

COPYRIGHT 2018

S5.2

FRAMING DETAILS

COUNTY APPROVAL:
SIGNATURE _____ DATE_____

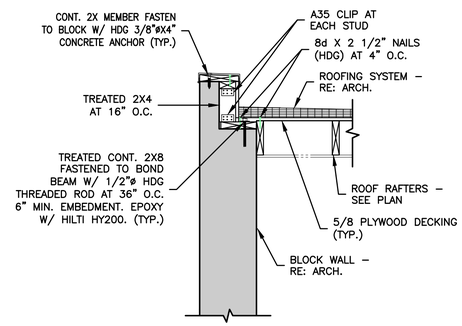

4 SECTION

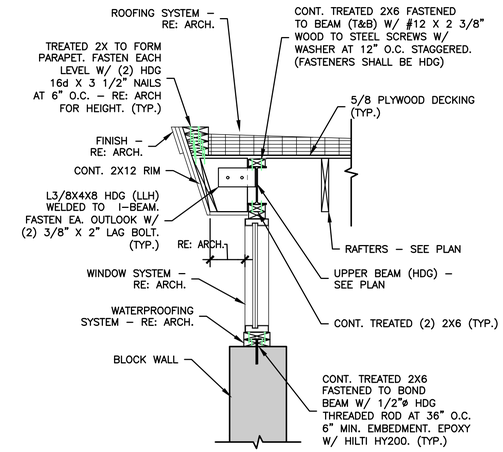

2 SECTION

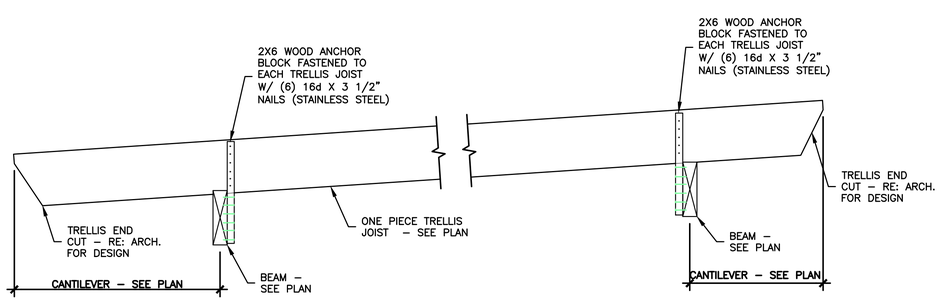

5 SECTION - TRELLIS FRAMING

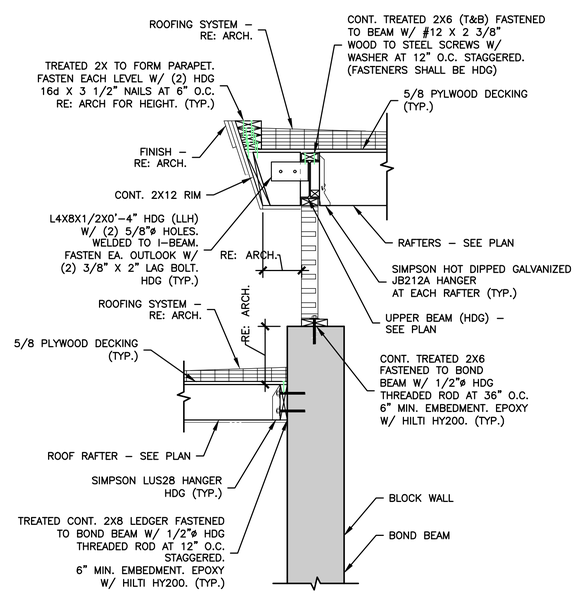

3 SECTION

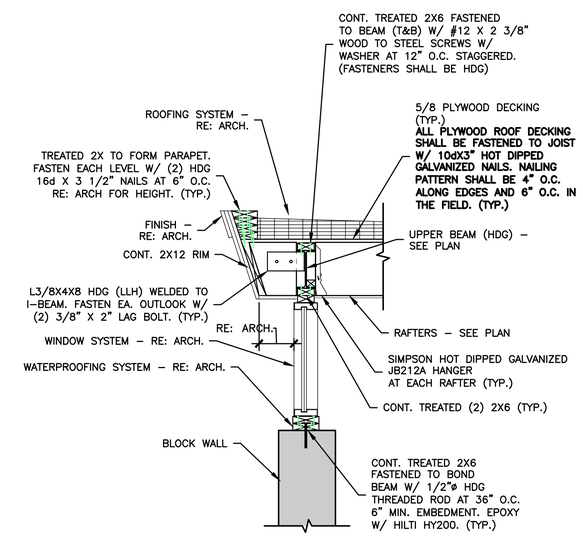

1 SECTION

GALVESTON COUNTY
BEACH PAVILION
CRYSTAL BEACH, TX 77650

BE–Arc LLC Project No : C–13–007.01

SHELMARK ENGINEERING, L.L.C.
CIVIL | MARINE | PLANNING | STRUCTURAL
920 FM 517 ROAD EAST | DICKINSON, TEXAS 77539
TX FIRM NO. F-2124

easterwood ARCHITECTS STUDIO
2328 BALL STREET
GALVESTON TEXAS 77550
409-354-8976
EASTERWOOD@BE-ARC.COM

DATE	REVISION

STATE OF TEXAS
MARCUS J. MICHNA
84739
LICENSED
PROFESSIONAL ENGINEER
8-24-18

BID SET

DATE ISSUED: 08/24/2018

COPYRIGHT 2018

S5.3

FRAMING DETAILS

COUNTY APPROVAL:
SIGNATURE _____ DATE_____

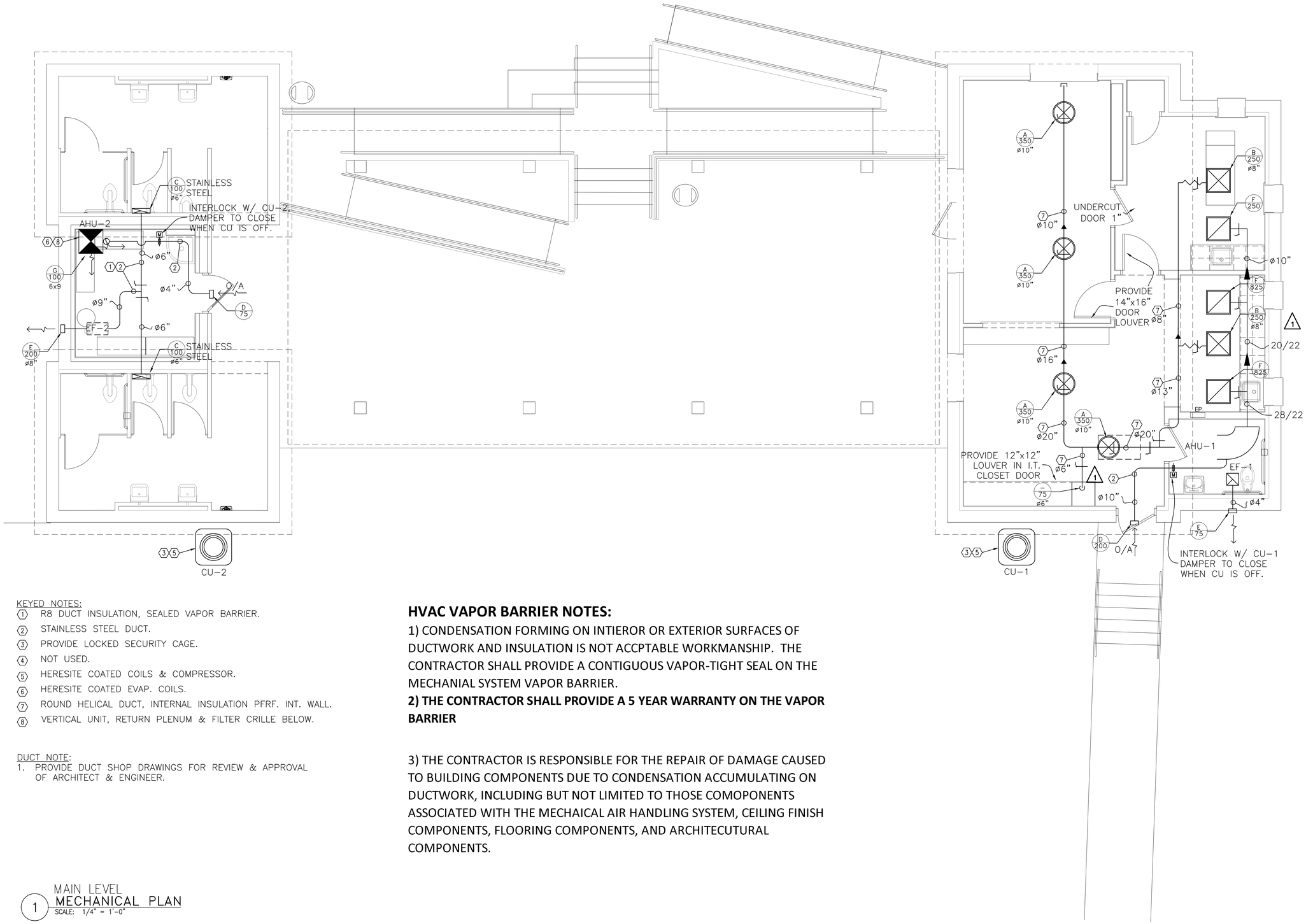

KEYED NOTES:

1. R8 DUCT INSULATION, SEALED VAPOR BARRIER.
2. STAINLESS STEEL DUCT.
3. PROVIDE LOCKED SECURITY CAGE.
4. NOT USED.
5. HERESITE COATED COILS & COMPRESSOR.
6. HERESITE COATED EVAP. COILS.
7. ROUND HELICAL DUCT, INTERNAL INSULATION PFRF. INT. WALL.
8. VERTICAL UNIT, RETURN PLENUM & FILTER CRILLE BELOW.

DUCT NOTE:

1. PROVIDE DUCT SHOP DRAWINGS FOR REVIEW & APPROVAL OF ARCHITECT & ENGINEER.

HVAC VAPOR BARRIER NOTES:

1) CONDENSATION FORMING ON INTIEROR OR EXTERIOR SURFACES OF DUCTWORK AND INSULATION IS NOT ACCPTABLE WORKMANSHIP. THE CONTRACTOR SHALL PROVIDE A CONTIGUOUS VAPOR-TIGHT SEAL ON THE MECHANIAL SYSTEM VAPOR BARRIER.

2) THE CONTRACTOR SHALL PROVIDE A 5 YEAR WARRANTY ON THE VAPOR BARRIER

3) THE CONTRACTOR IS RESPONSIBLE FOR THE REPAIR OF DAMAGE CAUSED TO BUILDING COMPONENTS DUE TO CONDENSATION ACCUMULATING ON DUCTWORK, INCLUDING BUT NOT LIMITED TO THOSE COMOPONENTS ASSOCIATED WITH THE MECHAICAL AIR HANDLING SYSTEM, CEILING FINISH COMPONENTS, FLOORING COMPONENTS, AND ARCHITECUTURAL COMPONENTS.

1 MAIN LEVEL
MECHANICAL PLAN
SCALE: 1/4" = 1'-0"

STATE OF TEXAS
JANET MURRAY HOFFMAN
102117
PROFESSIONAL ENGINEER

The seal appearing on this document was authorized by JANET MURRAY HOFFMAN P.E. 102117 8/10/2018

GALVESTON COUNTY
BEACH PAVILION
CRYSTAL BEACH, TX 77650

BE-Arc LLC Project No : C-13-007.01

Ibis Engineering
REG # F-11156
P.O. Box 45171
Galveston, Texas 77555
PH 409.521.6740
THIS PRINT, THE PROPERTY OF IBIS ENGINEERING, MAY NOT BE USED OR REPRODUCED IN ANY MANNER NOR DISCLOSED TO ANY OTHER PERSONS OR ORGANIZATIONS WITHOUT THE PRIOR WRITTEN CONSENT FROM IBIS ENGINEERING.

easterwood
ARCHITECTS STUDIO
409-354-8976
EASTERWOOD@BE-ARC.COM
2328 BALL STREET
GALVESTON TEXAS 77550

DATE	REVISION

BID SET

DATE ISSUED:
8/10/2018

COPYRIGHT 2018

M1.0

COUNTY APPROVAL:
SIGNATURE ______________________________ DATE______________

DUCTWORK SYMBOLS LEGEND

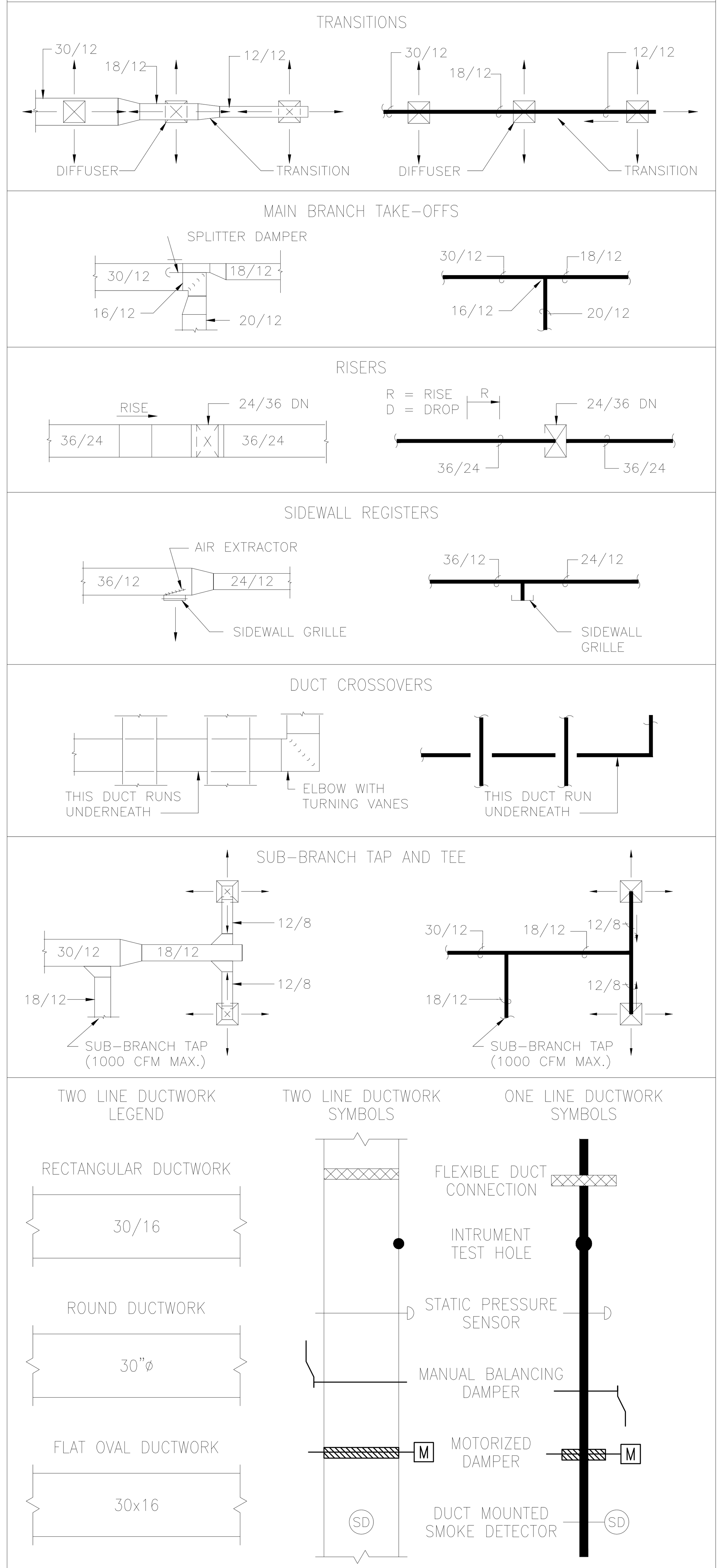

DUCT LINER AND INSULATION

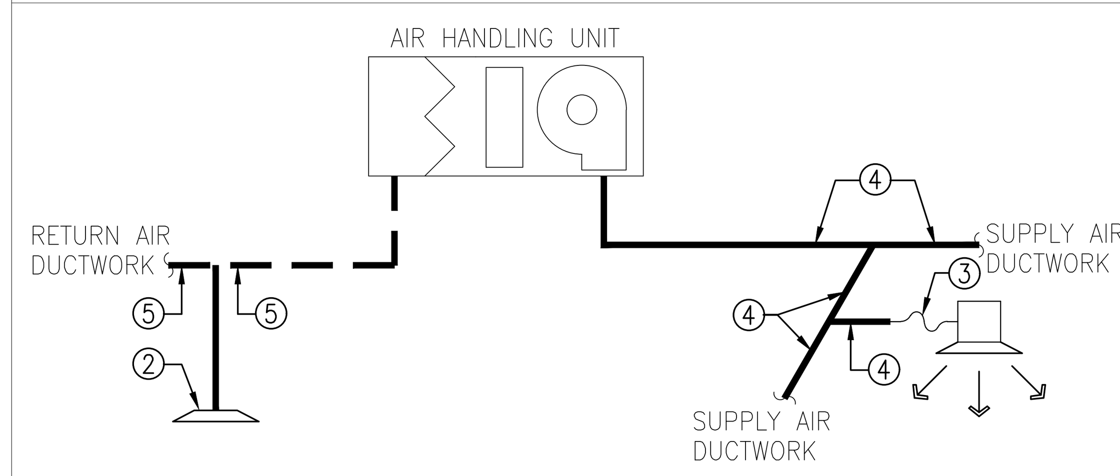

AIR HANDLING UNIT

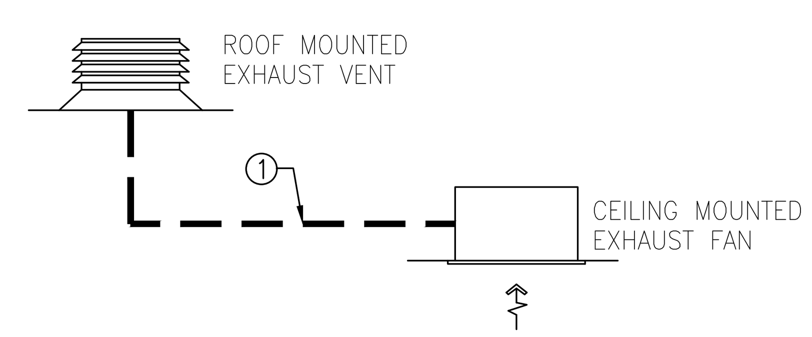

EXHAUST AIR SYSTEMS

NOTES

1. SHEETMETAL DUCTWORK WITH EXTERNAL DUCTWORK INSULATION AS SPECIFIED.
2. EXTERNAL INSULATION (MIN. R-8) ON BACK PAN OF RETURN AIR GRILLE.
3. FLEXIBLE DUCTWORK WITH EXTERNAL DUCTWORK INSULATION.
4. SHEETMETAL DUCTWORK WITH EXTERNAL DUCTWORK INSULATION, (R-8) 1" THICK 1-1/2 LB LINER WITH FOIL REINFORCED KRAFT VPOR BARRIER FACING. REFER TO SPECIFICATIONS.
5. SHEETMETAL DUCTWORK WITH EXTERNAL DUCTWORK INSULATION, (R-8) 1" THICK 1-1/2 LB LINER WITH FOIL REINFORCED KRAFT VPOR BARRIER FACING. REFER TO SPECIFICATIONS.

GRILLE SIZING SCHEDULE

STANDARD GRILLE

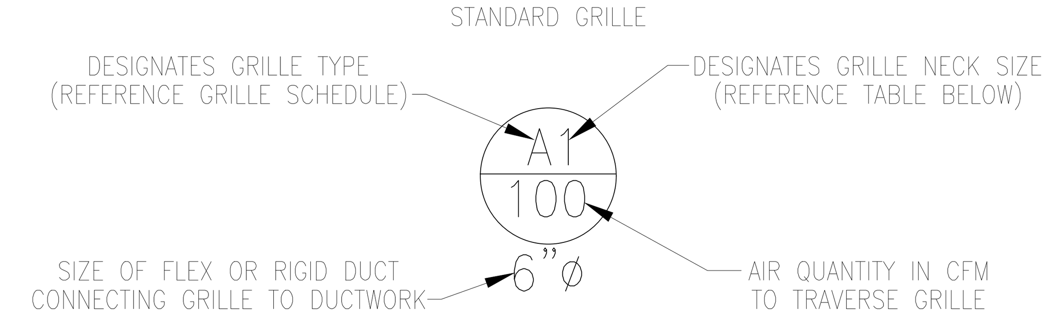

ALL GRILLES SHOWN SHALL BE FOUR-WAY THROW UNLESS OTHERWISE SHOWN.

GRILLE SIZE DESIGNATION	GRILLE NECK SIZE	GRILLE SIZE DESIGNATION	GRILLE NECK SIZE
1	6" x 6"	7	15" x 15"
2	8" x 8"	8	16" x 16"
3	9" x 9"	9	18" x 18"
4	10" x 10"	10	20" x 20"
5	12" x 12"	11	22" x 22"
6	14" x 14"	12	24" x 24"

FANS

MARK	LOCATION	CFM	MAXIMUM RPM	EXT. STATIC PRESSURE (IN. W.C.)	HORSE POWER	CURRENT CHARAC.	LOCALLY SWITCHED BY	INTERLOCKED WITH	FAN TYPE	MANUFACTURER	MODEL NUMBER	REMARKS
EF-1	BATHROOMS	50	–	–	50 W	120/1/60	BATH LIGHT	–	–	GREENHECK	–	1,2,3 ⚠1

GENERAL NOTES:
1. EXTERNAL STATIC PRESSURE INCLUDES LOSSES DUE TO DUCTWORK, AIR DEVICES, DAMPERS, AND DUCT MOUNTED HOT WATER COILS WHERE APPLICABLE. DIRTY FILTER AND UNIT CASING MUST BE ADDED TO EXTERNAL STATIC PRESSURE TO OBTAIN TOTAL PRESSURE LOSS. INCREASE HORSEPOWER AS REQUIRED TO MEET YOUR TOTAL PRESSURE LOSS. COORDINATE WITH ELECTRICIAN.
2. MINIMUM RECOMMENDED CLEARANCE AROUND UNIT IS 12 INCHES ON NON-SERVICE SIDES AND 30 INCHES ON SERVICE SIDES. MAINTAIN MINIMUM CLEARANCE AS REQUIRED TO OPEN ACCESS AND CONTROL DOORS ON UNIT FOR SERVICE, MAINTENANCE, AND INSPECTION. MAINTAIN MINIMUM ELECTRICAL CLEARANCE AS REQUIRED BY NEC.
3. FAN SHALL BE CENTRIFUGAL, BELT DRIVEN TYPE UNLESS OTHERWISE SCHEDULED.

REMARKS:
1. CENTRIFUGAL CEILING MOUNTED EXHAUST FAN.
2. PROVIDE WITH BACKDRAFT DAMPER.
3. PROVIDE WITH WHITE FINISH.

GRILLE

MARK	SERVICE	TYPE	DAMPER	CONSTRUCTION MATERIAL	FINISH COLOR	MANUFACTURER	MODEL NUMBER	REMARKS
B	SUPPLY AIR	DIFFUSER	VOLUME	ALUM.	OFF WHITE	TITUS	PAS	24" X 24" MODULE FACE, SQUARE CEILING, ROUND NECK, OBD, INSULATED
F	RETURN AIR	GRILLE	–	ALUM.	OFF WHITE	TITUS	PAR	24" X 24" MODULE, PERFORATED, FILTER
C	SUPPLY AIR	DIFFUSER	VOLUME	ALUM.	OFF WHITE	–	–	WALL INLET LOUVER CORROSION RESISTANT
D	SUPPLY AIR	DIFFUSER	VOLUME	ALUM.	OFF WHITE	–	–	WALL INLET LOUVER W/ BACKDRAFT DAMPER CORROSION RESISTANT
E	EXHAUST	LOUVER	–	ALUM.	OFF WHITE	–	–	WALL EXHAUST LOUVER W/ BACKDRAFT DAMPER CORRISION RESISTANT
A	SUPPLY AIR	DIFFUSER	VOLUME	ALUM.	OFF WHITE	METAL AIRE	3100	CIRCULAR CEILING DIFFUSED, OBD
G	SUPPLY AIR	DIFFUSER	VOLUME	ALUM.	OFF WHITE	H & G	–	WALL DIFFUSED, 1-WAY, OBD

GENERAL NOTES:
1. N/A

REMARKS:
1. N/A

SYMBOL LEGEND

SYMBOL	DESCRIPTION (DISREGARD ITEMS NOT SHOWN ON PLANS)
GENERAL	
⟨#⟩	KEY NOTE TAG
(#)	NOTE SPECIFIC TO DETAIL TAG
△#	REVISION TAG
	NEW EQUIPMENT
DUCTWORK	
	SUPPLY AIR DUCTWORK
	RETURN AIR AND OUTSIDE AIR DUCTWORK
	EXHAUST AIR DUCTWORK
	FLEXIBLE DUCTWORK
	SUPPLY AIR DUCTWORK THROUGH HORIZONTAL PARTITION
	RETURN AIR AND OUTSIDE AIR DUCTWORK THROUGH HORIZONTAL PARTITION
	EXHAUST AIR DUCTWORK THROUGH HORIZONTAL PARTITION
	FIRE DAMPER (VERTICAL)
	MANUAL BALANCING DAMPER (SEE DAMPER SCHEDULE)
M	MOTORIZED DAMPER (SEE DAMPER SCHEDULE)

SYMBOL	DESCRIPTION (DISREGARD ITEMS NOT SHOWN ON PLANS)
SENSORS	
(T)	THERMOSTAT AND TEMPERATURE SENSOR
(H)	HUMIDISTAT
(S)	SMOKE DETECTOR
AIR DEVICES	
	GRILLE SIZE TAG (REFER TO GRILLE SIZE LEGEND)
	SUPPLY AIR GRILLE WITH FOUR-WAY THROW
	RETURN AIR GRILLE WITH SOUND BOOT
	EXHAUST AIR GRILLE
PIPING	
—D—	CONDENSATE DRAIN LINE

1. CODES, RULES AND REGULATIONS - DESIGN OF SYSTEM
   A) ALL WORK AND MATERIALS SHALL BE IN FULL ACCORDANCE WITH ALL APPLICABLE FEDERAL, STATE, AND LOCAL LAWS, ORDINANCES AND CODES. 2009 IBC, 2009 IMC, 2008 NEC.
   B) WHEN THE DRAWINGS CALL FOR MATERIALS OR CONSTRUCTION OF A BETTER QUALITY OR LARGER SIZES THAN REQUIRED BY THE ABOVE MENTIONED CODES AND RULES, WORK SHALL BE AS SPECIFIED OR SHOWN RATHER THAN AS REQUIRED BY CODE. ALL ITEMS OR FEATURES OF THE MECHANICAL SYSTEMS REQUIRED BY CODE SHALL BE INCLUDED, EVEN THOUGH NOT SPECIFIED HEREIN.
   C) INSTALLATION OF THE SYSTEMS SHALL BE IN ACCORDANCE WITH THE ABOVE MENTIONED CODES AND REGULATIONS AND ALSO SHALL CONFORM TO GOOD, ACCEPTED MECHANICAL PRACTICES.
2. PROVIDE AND INSTALL VOLUME DAMPERS IN ALL BRANCH DUCTS.
3. FLEXIBLE DUCTS TO BE GLASS-FLEX 6'-0", MAXIMUM IN LENGTH, WHERE APPLICABLE.
4. COORDINATE EXACT LOCATION OF ALL AIR OUTLETS AND INLETS (DIFFUSERS, REGISTERS AND GRILLES) WITH APPROPRIATE ARCHITECTURAL PLAN, AND VERIFY THEIR LOCATION WITH ARCHITECT ON THE JOB SITE BEFORE INSTALLATION. COLOR AS DIRECTED BY OWNER.
5. AUTOMATIC TEMPERATURE CONTROL DEVICE FOR REGULATION OF SPACE TEMPERATURE SHALL BE CAPABLE OF BEING SET FROM 55 TO 85°F, AND HAVE THE ABILITY TO OPERATE THE HEATING AND COOLING IN SEQUENCE. CONTROL SHALL BE ADJUSTABLE TO PROVIDE A RANGE OF UP TO 5°F BETWEEN FULL HEATING AND FULL COOLING AND HAVE CAPABILITY OF TERMINATING ALL HEATING AT A TEMPERATURE NO MORE THAN 70°F, AND COOLING AT A TEMPERATURE NOT LESS THAN 78°F.
6. APPLIANCES DESIGNED TO BE FIXED IN POSITION SHALL BE FASTENED IN PLACE.
7. A MAINTENANCE LABEL SHALL BE AFFIXED TO MECHANICAL EQUIPMENT AND A MAINTENANCE MANUAL SHALL BE PROVIDED FOR THE OWNERS USE.
8. PROVIDE ACCESS PANEL FOR ALL CONCEALED EQUIPMENT AND VOLUME DAMPERS.
9. ALL DUCT SIZES SHOWN ON THE FLOOR PLANS ARE CLEAR INSIDE DIMENSIONS.
10. THE MECHANICAL CONTRACTOR SHALL SECURE AND PAY FOR ALL REQUIRED PERMITS AND FEES.
11. SYSTEM SHALL BE EQUIPPED WITH AN AUTOMATIC SHUT-OFF. THE SMOKE DETECTOR SHALL BE INSTALLED IN THE MAIN SUPPLY AIR DUCT DOWNSTREAM OF THE FILTERS OR THEY MAY BE INSTALLED IN EACH ROOM OR SPACE SERVED BY THE SUPPLY AIR DUCT. DETECTORS SHALL ALSO BE INSTALLED IN THE MAIN RETURN DUCT (IF REQ'D. BY THE LOCAL CODE) AHEAD OF OSA INTAKE. SEE CODE FOR EXEMPTIONS AND LOCAL AUTHORITY FOR CODE INTERPRETATION, OR AS INDICATED ON PLAN.
12. ALL EQUIPMENT AND APPLIANCES ARE LISTED PRODUCTS, AND WILL BE INSTALLED ACCORDING TO THEIR LISTING, AND ALL LISTING INFORMATION WILL BE AVAILABLE FOR INSPECTION.
13. ALL DUCTWORK SHEETMETAL FABRICATION AND INSTALLATION SHALL COMPLY WITH LATEST EDITION OF SMACNA STANDARDS.
14. COORDINATE IN THE FIELD THE EXACT LOCATION OF ALL CEILING MOUNTED GRILLES AND DIFFUSERS WITH LIGHT FIXTURES
15. ALL BRACKETS, CLAMPS, AND HANGERS SHALL BE HOT DIPPED GALVANIZED. COAT ALL CUT ENDS AND WELDS WITH "ZRC" COLD GALVANIZING COMPOUND.
16. REFRIGERANT IS R-410A
17. SIZE REFRIGERANT LINES PER MANUFACTURER'S RECOMMENDATIONS.
18. PROVIDE 1 1/2" INSULATION ON REFRIGERANT LINES.
19. PROVIDE SEVEN (7) DAY PROGRAMMABLE THERMOSTATS.
20. ALL SUPPLY AND RETURN AIR DUCTS AND PLENUMS SHALL BE INSULATED WITH A MINIMUM OF R-8 INSULATION (2").
21. INSULATE CONDENSATE PIPE WITH 1 1/2" UV RESISTANT INSULATION AND WEATHERPROOF TAPE. PROVIDE DRIP LOOPS ON THE EXTERIOR WIRES, CONDUIT, AND LINES TO PREVENT WATER INFILTRATION TO INTERIOR SPACES.
22. SPLITTER OR BALANCING DAMPERS WHERE SHOWN, SHALL BE OF SUFFICIENT GAUGE TO PREVENT BUCKLING OR VIBRATING AND SHALL BE OPERATED BY A QUADRANT DAMPER ADJUSTER WITH LOCKING FEATURES WHICH WILL HOLD DAMPER SECURELY IN POSITION AT DESIRED SETTING.
23. DUCT CONNECTIONS TO EQUIPMENT SHALL BE MADE THROUGH AIRTIGHT CANVAS OR OTHER APPROVED FLEXIBLE CONNECTIONS.
24. PROVIDE CERTIFIED TEST AND BALANCE OF HVAC SYSTEM (AND EXHAUST SYSTEM WHERE APPLICABLE) NO LATER THAN THE DAY C.O. INSPECTION TO TENANT FOR APPROVAL BY LANDLORD. CONTRACTOR MUST USE LANDLORDS DESIGNATED CONTRACTOR FOR THIS.
25. UNLESS SPECIFICALLY NOTED IN THE ARCHITECTURAL OR MECH.. DRAWINGS, ALL DUCTWORK SHALL BE INSTALLED AS HIGH AS POSSIBLE WITHIN THE PREMISES. ALL DUCT WORK EQUIPMENT AND OTHER ACCESSORIES IN PUBLIC OR SALES AREAS SHALL BE CONCEALED.
26. ALL H.V.A.C EQUIPMENT & DUCTS SHALL BE PROVIDED WITH VIBRATION ISOLATORS, SOUND TRAPS, DUCT LINING, ACOUSTICAL HOUSINGS, ACOUSTICAL LOUVERS ETC. AS APPROPRIATE.
27. ALL ROOF CUTS, PATCHING AND REPAIR SHALL BE COORDINATED WITH THE LANDLORD AND PERFORMED BY THE LANDLORDS ROOFING CONTRACTOR AT TENANTS EXPENSE.
28. CONTRACTOR SHALL REPORT ANY DISCREPANCIES FOUND BETWEEN THESE DRAWINGS AND ACTUAL FIELD CONDITIONS TO THE ARCHITECT AND OWNER.
29. CONTRACTOR SHALL BE RESPONSIBLE FOR COORDINATION WITH CEILING INSTALLER FOR PROPER LOCATION OF ACCESS PANELS FOR EASE OF MAINTENANCE INCLUDING CHANGING OF FILTERS.

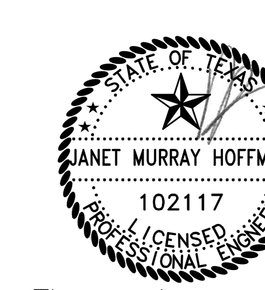

The seal appearing on this document was authorized by JANET MURRAY HOFFMAN P.E. 102117 8/10/2018

GALVESTON COUNTY
BEACH PAVILION
CRYSTAL BEACH, TX 77650
BE-Arc LLC Project No : C-13-007.01

ibis Engineering
REG # F-11156
P.O. Box 55171
Galveston, Texas 77555
PH 409.621.6740

THIS PRINT IS THE PROPERTY OF IBIS ENGINEERING IT MUST NOT BE TRACED OR REPRODUCED IN ANY MANNER NOR SHALL IT BE SUBMITTED WITHOUT PRIOR WRITTEN CONSENT FROM IBIS ENGINEERING.

easterwood ARCHITECTS STUDIO
409-354-8976
EASTERWOOD@BE-ARC.COM
2328 BALL STREET
GALVESTON TEXAS 77550

DATE	REVISION

BID SET

DATE ISSUED:
8/10/2018

COPYRIGHT 2018

M2.0

MECHANICAL SPECIFICATIONS

SINGLE–WALL RECTANGULAR DUCTS AND FITTINGS

A. GENERAL FABRICATION REQUIREMENTS: COMPLY WITH SMACNA'S "HVAC DUCT CONSTRUCTION STANDARDS – METAL AND FLEXIBLE" BASED ON REQUIRED STATIC–PRESSURE CLASS UNLESS OTHERWISE INDICATED.

B. TRANSVERSE JOINTS: SELECT JOINT TYPES AND FABRICATE ACCORDING TO SMACNA'S "HVAC DUCT CONSTRUCTION STANDARDS – METAL AND FLEXIBLE," FIGURE 2–1, "RECTANGULAR DUCT /TRANSVERSE JOINTS," FOR STATIC–PRESSURE CLASS, APPLICABLE SEALING REQUIREMENTS, MATERIALS INVOLVED, DUCT–SUPPORT INTERVALS, AND OTHER PROVISIONS IN SMACNA'S "HVAC DUCT CONSTRUCTION STANDARDS – METAL AND FLEXIBLE."

C. LONGITUDINAL SEAMS: SELECT SEAM TYPES AND FABRICATE ACCORDING TO SMACNA'S "HVAC DUCT CONSTRUCTION STANDARDS – METAL AND FLEXIBLE," FIGURE 2–2, "RECTANGULAR DUCT /LONGITUDINAL SEAMS," FOR STATIC–PRESSURE CLASS, APPLICABLE SEALING REQUIREMENTS, MATERIALS INVOLVED, DUCT–SUPPORT INTERVALS, AND OTHER PROVISIONS IN SMACNA'S "HVAC DUCT CONSTRUCTION STANDARDS – METAL AND FLEXIBLE."

D. ELBOWS, TRANSITIONS, OFFSETS, BRANCH CONNECTIONS, AND OTHER DUCT CONSTRUCTION: SELECT TYPES AND FABRICATE ACCORDING TO SMACNA'S "HVAC DUCT CONSTRUCTION STANDARDS – METAL AND FLEXIBLE," CHAPTER 4, "FITTINGS AND OTHER CONSTRUCTION," FOR STATIC–PRESSURE CLASS, APPLICABLE SEALING REQUIREMENTS, MATERIALS INVOLVED, DUCT –SUPPORT INTERVALS, AND OTHER PROVISIONS IN SMACNA'S "HVAC DUCT CONSTRUCTION STANDARDS – METAL AND FLEXIBLE."

SINGLE–WALL ROUND AND FLAT–QVAL DUCTS AN) FITTINGS

A. GENERAL FABRICATION REQUIREMENTS: COMPLY WITH SMACNA'S "HVAC DUCT CONSTRUCTION STANDARDS – METAL AND FLEXIBLE," CHAPTER 3, "ROUND, OVAL, AND FLEXIBLE DUCT," BASED ON INDICATED STATIC–PRESSURE CLASS UNLESS OTHERWISE INDICATED.

B. FLAT–OVAL DUCTS: INDICATED DIMENSIONS ARE THE DUCT WIDTH (MAJOR DIMENSION) AND DIAMETER OF THE ROUND SIDES CONNECTING THE FLAT PORTIONS OF THE DUCT (MINOR DIMENSION).

C. TRANSVERSE JOINTS: SELECT JOINT TYPES AND FABRICATE ACCORDING TO SMACNA'S "HVAC DUCT CONSTRUCTION STANDARDS – METAL AND FLEXIBLE," FIGURE 3–1, "ROUND DUCT TRANSVERSE JOINTS," FOR STATIC–PRESSURE CLASS, APPLICABLE SEALING REQUIREMENTS, MATERIALS INVOLVED, DUCT–SUPPORT INTERVALS, AND OTHER PROVISIONS IN SMACNA'S "HVAC DUCT CONSTRUCTION STANDARDS – METAL AND FLEXIBLE."

D. LONGITUDINAL SEAMS: SELECT SEAM TYPES AND FABRICATE ACCORDING TO SMACNA'S "HVAC DUCT CONSTRUCTION STANDARDS – METAL AND FLEXIBLE," FIGURE 3–2, "ROUND DUCT LONGITUDINAL SEAMS," FOR STATIC–PRESSURE CLASS, APPLICABLE SEALING REQUIREMENTS, MATERIALS INVOLVED, DUCT–SUPPORT INTERVALS, AND OTHER PROVISIONS IN SMACNA'S "HVAC DUCT CONSTRUCTION STANDARDS – METAL AND FLEXIBLE."

E. TEES AND LATERALS: SELECT TYPES AND FABRICATE ACCORDING TO SMACNA'S "HVAC DUCT CONSTRUCTION STANDARDS – METAL AND FLEXIBLE," FIGURE 3–5, "go DEGREE TEES AND LATERALS," AND FIGURE 3–6, "CONICAL TEES," FOR STATIC–PRESSURE CLASS, APPLICABLE SEALING REQUIREMENTS, MATERIALS INVOLVED, DUCT–SUPPORT INTERVALS, AND OTHER PROVISIONS IN SMACNA'S "HVAC DUCT CONSTRUCTION STANDARDS – METAL AND FLEXIBLE."

SHEET METAL DUCTWORK

A. GENERAL MATERIAL REQUIREMENTS: COMPLY WITH SMACNA'S "HVAC DUCT CONSTRUCTION STANDARDS – METAL AND FLEXIBLE" FOR ACCEPTABLE MATERIALS, MATERIAL THICKNESSES, AND DUCT CONSTRUCTION METHODS UNLESS OTHERWISE INDICATED. SHEET METAL MATERIALS SHALL BE FREE OF PITTING, SEAM MARKS, ROLLER MARKS, STAINS, DISCOLORATIONS, AND OTHER IMPERFECTIONS.

B. GALVANIZED SHEET STEEL: COMPLY WITH ASTM A 653/A 653M.

C. SUPPLY AND RETURN DUCTWORK SHALL BE EXTERNALLY INSULA TED 'MTH EXTERNAL BLANKET INSULATION. DUCTWORK SHALL BE INTERNALLY LINED ONLY WHERE SPECIFICALLY INDICATED.

D. DUCTWORK SHALL BE SEALED AS REQUIRED BY THE AUTHORITIES HAVING JURISDICTION AND AS REQUIRED TO LIMIT LEAKAGE. LEAKAGE IN EXCESS OF 5% SHALL NOT BE ACCEPTABLE.

E. DUCT DIMENSIONS ARE INSIDE CLEAR DIMENSIONS.

F. THE INTERIOR SURFACE OF ALL DUCTWORK SHALL BE SMOOTH WITH NO SHEETMETAL OR OTHER PARTS PROJECTING INTO THE AIR STREAM. ALL SEAMS AND JOINTS SHALL BE EXTERNAL. THE INSIDE OF ALL DUCTWORK SHALL BE THOROUGHLY CLEANED AND ALL FANS OPERATED TO REMOVE ANY DEBRIS PRIOR TO CONNECTION OF AIR DISTRIBUTION DEVICES.

G. ALL DUCTWORK DIMENSIONS ON THE DRAWINGS ARE CLEAR INSIDE

H. INSTALL ALL DUCTWORK TIGHT TO STRUCTURE UNLESS OTHERWISE NOTED. THE MECHANICAL CONTRACTOR SHALL COORDINATE WITH ALL OTHER TRADES PRIOR TO THE CONSTRUCTION OR INSTALLATION OF DUCTWORK.

I. ALL TRANSVERSE JOINTS SHALL BE SEALED WITH A WATER BASE ADHESIVE SEALER DESIGNED FOR USE IN MEDIUM VELOCITY DUCT SYSTEMS. SEALER SHALL BE EFFECTIVE AGAINST BOTH NEGATIVE AND POSITIVE PRESSURE LOSSES. SEALER SHALL HAVE A FLAME SPREAD RATING OF 25 OR LESS AND A SMOKE DEVELOPED RATING OF 50 OR LESS. APPLY UN–THINNED WITH BRUSH, TROWEL OR CAULKING GUN AS PER THE MANUFACTURER'S RECOMMENDATIONS AND ALLOW TO DRY FOR A MINIMUM OF 48 HOURS BEFORE AIR IS APPLIED TO THE SYSTEM. SEALER SHALL BE "IRON GRIP WATER BASE DUCT SEALANT #601" AS MANUFACTURED BY HARDCAST, INC., UNI–GRIP AS MANUFACTURED BY UNITED MCGILL, OR AN APPROVED EQUAL.

J. ALL ROUND TAKE–OFFS SHALL BE MADE WITH A DAMPER EXTRACTOR SPIN–IN COLLAR. SPIN–INS SHALL BE INSTALLED WITH THEIR DAMPER AXIS PARALLEL TO AIR FLOW.

K. ALL DUCTWORK SUPPORTS SHALL BE PER TABLE 5–1 OF THE SMACNA MANUAL WITH ALL SUPPORTS DIRECTLY ANCHORED TO THE BUILDING STRUCTURE. SUPPORTS SHALL BE ON MAXIMUM 8'–0" CENTERS WITH ADDITIONAL SUPPORTS AS REQUIRED TO PREVENT SAGGING.

L. FLEXIBLE DUCT FABRIC CONNECTIONS SHALL BE INSTALLED ON THE INLET AND OUTLET CONNECTIONS TO ALL POWERED AIR MOVING EQUIPMENT WHICH IS NOT CONNECTED WITH FLEXIBLE DUCT. A MINIMUM OF 1" OF SLACK SHALL BE ALLOWED IN ALL FLEXIBLE CONNECTIONS TO INSURE VIBRATION ISOLATION. FLEXIBLE FABRIC SHALL BE A MINIMUM OF 3 INCHES WIDE WITH "GRIP–LOC" SEAM TO 24 GAUGE GALVANIZED METAL SIDE CONNECTORS A MINIMUM OF 3 INCHES WIDE EACH. FLEXIBLE CONNECTION ARE TO FABRICATED WITH ELGEN "ZIPPERLOCK" #ZLN–4 NEOPRENE COATED 30 OZ. FIBERGLASS WITH 24 GAUGE GALVANIZED IRON SIDE CONNECTORS, OR DURO DYNE EXCELON "METAL–FAB" VINYL COATED 22 OZ. NYLON WITH 24 GAUGE GALVANIZED IRON SIDE CONNECTORS OR "APPROVED EQUAL".

M. INSTALL MANUAL SPLITTER DAMPERS IN BRANCH TAKE–OFFS WHERE SHOWN. SPLITTER DAMPERS SHALL BE MINIMUM 16 GAUGE GALVANIZED SHEET METAL AND SHALL BE 3/4 OF THE WIDTH OF THE SMALLEST TAKE–OFF BUT NO LESS THAN 6" LONG. DAMPERS SHALL HAVE 1/8" OF CLEARANCE TO THE DUCT IN WHICH THEY ARE INSTALLED. SPLITTER DAMPERS SHALL BE CONTROLLED BY ONE OR MORE CONTROL RODS IN ACCORDANCE WITH FIG. 2–5 OF THE SMACNA MANUAL. WHERE SPLITTERS ARE IN CONCEALED INACCESSIBLE LOCATIONS, SUBMIT PROPOSED CONTROL ROD DETAILS FOR APPROVAL.

N. DUCTWORK WHICH IS EXPOSED TO WEATHER SHALL HAVE SOLDERED JOINTS AND SEAMS AND SHALL BE PAINTED WITH A SUITABLE EPOXY COATING.

FLEXIBLE DUCIWORK

A. FLEXIBLE DUCT SHALL BE USED FOR CONNECTIONS TO AIR DISTRIBUTION DEVICES WHERE SHOWN ON THE DRA'MNGS OR SPECIFIED HEREIN. MAXIMUM LENGTH SHALL BE 8'–0" FOR AIR DISTRIBUTION DEVICE CONNECTIONS. WHERE LONGER RUNS ARE REQUIRED, PROVIDE RIGID DUCTWORK.

B. INSULATED FLEXIBLE DUCT SHALL BE A FACTORY FABRICATED ASSEMBLY CONSISTING OF A GALVANIZED STEEL OR SPIRAL ALUMINUM HELIX. STAINLESS INNER LINER SHALL BE COMPOSED OF 3–PLY ALUMINUM FOIL OR HEAVILY COATED FIBERGLASS WITH A MAXIMUM THERMAL CONDUCTANCE OF .23 BTU/HR/SF /'F. THE ASSEMBLY SHALL BE SHEATHED IN A REINFORCED METALIZED VAPOR BARRIER OUTER JACKET.

C. THE FLEXIBLE DUCT ASSEMBLY SHALL BE SUITABLE FOR A MINIMUM OF 6" W.C. WORKING PRESSURE AND SHALL BE LISTED CLASS I BY THE UNDERWRITERS LABORATORY AT A FLAME SPREAD OF NOT OVER 25 AND A SMOKE DEVELOPED RATE OF NOT OVER 50. DUCTS SHALL ALSO COMPLY WITH NFPA STANDARD 90A.

D. FLEXIBLE DUCTS SHALL BE SUPPORTED IN SUCH A MANNER TO PREVENT SAGS AND KINKS. BENDS IN ANY LENGTH OF FLEXIBLE DUCT SHALL NOT EXCEED 90' FOR AIR DISTRIBUTION DEVICE CONNECTIONS.

E. ALL JOINTS AND CONNECTIONS SHALL BE MADE WITH 1/2" WIDE STAINLESS STEEL DUCT CLAMPS OR 100% NYLON SELF–LOCKING CLAMPS MANUFACTURED BY PANDUIT CORPORATION OR AN APPROVED EQUAL.

F. IF IT COMPLIES WITH THESE SPECIFICATIONS, FLEXIBLE DUCTWORK OF THE FOLLOWING TYPES WILL BE ACCEPTABLE:

FLEXMASTER TYPE 8M OR APPROVED EQUAL (EQUIVALENT TO R6).

CONTROLS

PROVIDE ALL TEMPERATURE CONTROLS MODIFICATIONS REQUIRED FOR A COMPLETE AND FUNCTIONING CONTROLS SYSTEM. ALL CONTROLS SHALL MATCH BUILDING STANDARD.

CHILLED WATER/ CONDENSATE PIPING

A. CONDENSATE–DRAIN PIPING: TYPE M (C) DRAWN–TEMPER COPPER TUBING, WROUGHT –COPPER FITTINGS, AND SOLDERED JOINTS.

B. CONDENSATE AND EQUIPMENT DRAIN WATER BELOW 60 DEG F (16 DEG C):

1. ALL PIPE SIZES: INSULATION SHALL BE ONE OF THE FOLLOWING: MINERAL–FIBER, PREFORMED PIPE INSULATION, TYPE 1: 1 INCH (25 MM) THICK.

DUCT LINER

A. FIBROUS–GLASS DUCT LINER: COMPLY WITH ASTM C 1071, NFPA 90A, OR NFPA 90B; AND WITH NAIMA AH124, "FIBROUS GLASS DUCT LINER STANDARD."

B. MAXIMUM THERMAL CONDUCTIVITY: TYPE I, FLEXIBLE: 0.27 BTU X IN./H X SQ. FT. X DEG F (0.039 W/M X K) AT 75 DEG F (24 DEG C) MEAN TEMPERATURE. R6 EQUIVALENT. TYPE II, RIGID: 0.23 BTU X IN./H X SQ. FT. X DEG F (0.033 W/M X K) – R6 EQUIVALENT. ANTIMICROBIAL EROSION–RESISTANT COATING: APPLY TO THE SURFACE OF THE LINER THAT WILL FORM THE INTERIOR SURFACE OF THE DUCT TO ACT AS A MOISTURE REPELLENT AND EROSION–RESISTANT COATING. ANTIMICROBIAL COMPOUND SHALL BE TESTED FOR EFFICACY BY AN NRTL AND REGISTERED BY THE EPA FOR USE IN HVAC SYSTEMS. WATER–BASED LINER ADHESIVE: COMPLY WITH NFPA 9DA OR NFPA 9DB AND WITH ASTM C 916. FOR INDOOR APPLICATIONS, USE ADHESIVE THAT HAS A VOC CONTENT OF 80 G/L OR LESS WHEN CALCULATED ACCORDING TO 40 CFR 59, SUBPART D (EPA METHOD 24).

C. SHOP APPLICATION OF DUCT LINER: COMPLY WITH SMACNA'S "HVAC DUCT CONSTRUCTION STANDARDS – METAL AND FLEXIBLE," FIGURE 7–11, "FLEXIBLE DUCT LINER INSTALLATION." ADHERE A SINGLE LAYER OF INDICA TED THICKNESS OF DUCT LINER WITH 100 PERCENT ADHESIVE COVERAGE AT LINER CONTACT SURFACE AREA. ATTAINING INDICATED THICKNESS WITH MULTIPLE LAYERS OF DUCT LINER IS PROHIBITED.

DUCT INSULATION

A. MINERAL–FIBER BLANKET INSULATION: MINERAL OR GLASS FIBERS BONDED WITH A THERMOSETTING RESIN. COMPLY WITH ASTM C 553, TYPE II AND ASTIM C 1290, TYPE III WITH FACTORY–APPLIED FSK JACKET. EQUIVALENT TO R–6. PRODUCTS: SUBJECT TO COMPLIANCE WITH REQUIREMENTS, PROVIDE ONE OF THE FOLLOWING:

1. CERTAINTEED CORP.; SOFTTOUCH DUCT WRAP.
2. JOHNS MANVILLE; MICROLITE.
3. KNAUF INSULATION; FRIENDLY FEEL DUCT WRAP.
4. MANSON INSULATION INC.; ALLEY WRAP.
5. OWENS CORNING; SOFTR ALL–SERVICE DUCT WRAP.

B. MINERAL –FIBER ADHESIVE: COMPLY WITH MIL –A–3316C, CLASS 2, GRADE A. PRODUCTS: SUBJECT TO COMPLIANCE WITH REQUIREMENTS, PROVIDE ONE OF THE FOLLOWING:

1. CHILDERS BRAND, SPECIALTY CONSTRUCTION BRANDS, INC., A BUSINESS OF H. B. FULLER COMPANY; CP–127.
2. EAGLE BRIDGES – MARATHON INDUSTRIES; 225.
3. FOSTER BRAND, SPECIALTY CONSTRUCTION BRANDS, INC., A BUSINESS OF H. B. FULLER COMPANY; 85–60/85–70.
4. MON–ECO INDUSTRIES, INC.; 22–25.

FOR INDOOR APPLICATIONS, USE ADHESIVE THAT HAS A VOC CONTENT OF 80 G/L OR LESS WHEN CALCULATED ACCORDING TO 40 CFR 59, SUBPART D (EPA METHOD 24).

CASJ ADHESIVE, AND FSK JACKET ADHESIVE: COMPLY WITH MIL–A–3316C, CLASS 2, GRADE A FOR BONDING INSULATION JACKET LAP SEAMS AND JOINTS. PRODUCTS: SUBJECT TO COMPLIANCE WITH REQUIREMENTS, PROVIDE ONE OF THE FOLLOWING:

1. CHILDERS BRAND, SPECIALTY CONSTRUCTION BRANDS, INC., A BUSINESS OF H. B. FULLER COMPANY; CP–82.
2. EAGLE BRIDGES – MARATHON INDUSTRIES; 225.
3. FOSTER BRAND, SPECIALTY CONSTRUCTION BRANDS, INC., A BUSINESS OF H. B. FULLER COMPANY; 85–50.
4. MON–ECO INDUSTRIES, INC.; 22–25.

FOR INDOOR APPLICATIONS, USE ADHESIVE THAT HAS A VOC CONTENT OF 50 G/L OR LESS WHEN CALCULATED ACCORDING TO 40 CFR 59, SUBPART D (EPA METHOD 24).

DMASTICS

MATERIALS SHALL BE COMPATIBLE WITH INSULATION MATERIALS, JACKETS, AND SUBSTRATES; COMPLY WITH MIL–PRF–19565C, TYPE II.

1. FOR INDOOR APPLICATIONS, USE MASTICS THAT HAVE A VOC CONTENT OF 50 G/L OR LESS WHEN CALCULATED ACCORDING TO 40 CFR 59, SUBPART D (EPA METHOD 24).

EVAPOR–BARRIER MASTIC: WATER BASED; SUITABLE FOR INDOOR USE ON BELOW AMBIENT SERVICES. PRODUCTS: SUBJECT TO COMPLIANCE WITH REQUIREMENTS, PROVIDE ONE OF THE FOLLOWING:

1. FOSTER BRAND, SPECIALTY CONSTRUCTION BRANDS, INC., A BUSINESS OF H. B. FULLER COMPANY; 30–80/30–90.
2. VIMASCO CORPORATION; 7 49.

WATER–VAPOR PERMANENT: ASTM E 96/E 96M, PROCEDURE B, 0.013 PERM (0.009 METRIC PERM) AT 43–MIL (1.09–MM) DRY FILM THICKNESS. SERVICE TEMPERATURE RANGE: MINUS 20 TO PLUS 180 DEG F (MINUS 29 TO PLUS 82 DEG C). SOLIDS CONTENT: ASTM D 1644, 58 PERCENT BY VOLUME AND 70 PERCENT BY WEIGHT. COLOR: WHITE.

F SEALANTS

FSX AND METAL JACKET FLASHING SEALANTS: PRODUCTS: SUBJECT TO COMPLIANCE WITH REQUIREMENTS, PROVIDE ONE OF THE FOLLOWING:

1. CHILDERS BRAND, SPECIALTY CONSTRUCTION BRANDS, INC., A BUSINESS OF H. B. FULLER COMPANY; CP–76.
2. EAGLE BRIDGES – MARATHON INDUSTRIES; 405.
3. FOSTER BRAND, SPECIALTY CONSTRUCTION BRANDS, INC., A BUSINESS OF H. B. FULLER COMPANY; 95–44.
4. MON–ECO INDUSTRIES, INC.; 44–05. MATERIALS SHALL BE COMPATIBLE WITH INSULATION MATERIALS, JACKETS, AND SUBSTRATES. FIRE– AND WATER–RESISTANT, FLEXIBLE, ELASTOMERIC SEALANT. SERVICE TEMPERATURE RANGE: MINUS 40 TO PLUS 250 DEG F (MINUS 40 TO PLUS 121 DEG C).

COLOR: ALUMINUM.

FOR INDOOR APPLICATIONS, USE SEALANTS THAT HAVE A VOC CONTENT OF 420 G/L OR LESS WHEN CALCULATED ACCORDING TO 40 CFR 59, SUBPART D (EPA METHOD 24).

GFSK TAPE: FOIL–FACE, VAPOR–RETARDER TAPE MATCHING FACTORY–APPLIED JACKET WITH

ACRYLIC ADHESIVE; COMPLYING WITH ASTIM C 1136. PRODUCTS: SUBJECT TO COMPLIANCE WITH REQUIREMENTS, PROVIDE ONE OF THE FOLLOWING:

1. ABI, IDEAL TAPE DIVISION; 491 AWF FSK.
2. AVERY DENNISON CORPORATION, SPECIALTY TAPES DIVISION; FASSON 0827.
3. COMPAC CORPORATION; 110 AND 111.
4. VENTURE TAPE; 1525 CW NT, 1528 CW, AND 1528 CW/SQ.

WIDTH: 3 INCHES (75 MM).

THICKNESS: 6.5 MILS (0.16 MM).

ADHESION: 90 OUNCES FORCE/INCH (1.0 N/MM) IN WIDTH.

ELONGATION: 2 PERCENT.

TENSILE STRENGTH: 40 LBF /INCH (7.2 N/MM) IN WIDTH.

FSK TAPE DISKS AND SQUARES: PRECUT DISKS OR SQUARES OF FSK TAPE.

I. 1–SECUREMENTS

BANDS:

PRODUCTS: SUBJECT TO COMPLIANCE WITH REQUIREMENTS, PROVIDE ONE OF THE FOLLOWING:

1. ITW INSULATION SYSTEMS; GERRARD STRAPPING AND SEALS.
2. RPR PRODUCTS, INC.; INSUL–MATE STRAPPING, SEALS, AND SPRINGS. ALUMINUM: ASTM B 209 (ASTIM B 209M), ALLOY 3003, 3005, 3105, OR 5005; TEMPER H–14, 0.020 INCH (0.51 MM) THICK, 1/2 INCH (13 MM) WIDE WITH WING SEAL OR CLOSED SEAL.

COUNTY APPROVAL:
SIGNATURE_____ DATE_____

INSULATION PINS AND HANGERS:

CAPACITOR–DISCHARGE–WELD PINS: COPPER– OR ZINC–COATED STEEL PIN, FULLY ANNEALED FOR CAPACITOR–DISCHARGE WELDING, 0.106–INCH–(2.6–MM–) DIAMETER SHANK, LENGTH TO SUIT DEPTH OF INSULATION INDICATED. PRODUCTS: SUBJECT TO COMPLIANCE WITH REQUIREMENTS, PROVIDE ONE OF THE FOLLOWING:

1. AGM INDUSTRIES, INC.; CWP–1.
2. GEMCO; CD.
3. MIDWEST FASTENERS, INC.; CD.
4. NELSON STUD WELDING; TPA, TPC, AND TPS.

JINSTALLATION OF MINERAL–FIBER INSULATION:

BLANKET INSULATION INSTALLATION ON DUCTS AND PLENUMS: SECURE 'MTH ADHESIVE AND INSULATION PINS. APPLY ADHESIVES ACCORDING TO MANUFACTURER'S RECOMMENDED COVERAGE RATES PER UNIT AREA, FOR 100 PERCENT COVERAGE OF DUCT AND PLENUM SURFACES. APPLY ADHESIVE TO ENTIRE CIRCUMFERENCE OF DUCTS AND TO ALL SURFACES OF FITTINGS AND TRANSITIONS. INSTALL EITHER CAPACITOR–DISCHARGE–WELD PINS AND SPEED WASHERS OR CUPPED–HEAD, CAPACITOR–DISCHARGE–WELD PINS ON SIDES AND BOTTOM OF HORIZONTAL DUCTS AND SIDES OF VERTICAL DUCTS AS FOLLOWS:

1. ON DUCT SIDES WITH DIMENSIONS 18 INCHES (450 MM) AND SMALLER, PLACE PINS ALONG LONGITUDINAL CENTERLINE OF DUCT. SPACE 3 INCHES (75 MM) MAXIMUM FROM INSULATION END JOINTS, AND 16 INCHES (400 MM) O.C.
2. ON DUCT SIDES 'MTH DIMENSIONS LARGER THAN 18 INCHES (450 MM), PLACE PINS 16 INCHES (400 MM) D.C. EACH WAY, AND 3 INCHES (75 MM) MAXIMUM FROM INSULATION JOINTS. INSTALL ADDITIONAL PINS TO HOLD INSULATION TIGHTLY AGAINST SURFACE AT CROSS BRACING.
3. PINS MAY BE OMITTED FROM TOP SURFACE OF HORIZONTAL, RECTANGULAR DUCTS AND PLENUMS.
4. DO NOT OVERCOMPRESS INSULATION DURING INSTALLATION.
5. IMPALE INSULATION OVER PINS AND ATTACH SPEED WASHERS.
6. CUT EXCESS PORTION OF PINS EXTENDING BEYOND SPEED WASHERS OR BEND PARALLEL WITH INSULATION SURFACE. COVER EXPOSED PINS AND WASHERS WITH TAPE MATCHING INSULATION FACING.

FOR DUCTS AND PLENUMS WITH SURFACE TEMPERATURES BELOW AMBIENT, INSTALL A CONTINUOUS UNBROKEN VAPOR BARRIER. CREATE A FACING LAP FOR LONGITUDINAL SEAMS AND END JOINTS WITH INSULATION BY REMOVING 2 INCHES (50 MM) FROM ONE EDGE AND ONE END OF INSULATION SEGMENT. SECURE LAPS TO ADJACENT INSULATION SECTION WITH 1/2–INCH (13–MM) OUTWARD–CLINCHING STAPLES, 1 INCH (25 MM) D.C. INSTALL VAPOR BARRIER CONSISTING OF FACTORY– OR FIELD–APPLIED JACKET, ADHESIVE, VAPOR–BARRIER MASTIC, AND SEALANT AT JOINTS, SEAMS, AND PROTRUSIONS.

1. REPAIR PUNCTURES, TEARS, AND PENETRATIONS WITH TAPE OR MASTIC TO MAINTAIN VAPOR–BARRIER SEAL.
2. INSTALL VAPOR STOPS FOR DUCTWORK AND PLENUMS OPERATING BELOW 50 DEG F (1 DEG C) AT 18–FOOT (5.5–M) INTERVALS. VAPOR STOPS SHALL CONSIST OF VAPOR–BARRIER MASTIC APPLIED IN A Z–SHAPED PATTERN OVER INSULATION FACE, ALONG BUTT END OF INSULATION, AND OVER THE SURFACE. COVER INSULATION FACE AND SURFACE TO BE INSULATED A WIDTH EQUAL TO TWO TIMES THE INSULATION THICKNESS, BUT NOT LESS THAN 3 INCHES (75 MM).

OVERLAP UNFACED BLANKETS A MINIMUM OF 2 INCHES (50 MM) ON LONGITUDINAL SEAMS END JOINTS. AT END JOINTS, SECURE WITH STEEL BANDS SPACED A MAXIMUM OF 18 INCHES (450 MM) O.C. INSTALL INSULATION ON RECTANGULAR DUCT ELBOWS AND TRANSITIONS WITH A FULL INSULATION SECTION FOR EACH SURFACE. INSTALL INSULATION ON ROUND AND FLAT–OVAL DUCT ELBOWS WITH INDIVIDUALLY MITERED GORES CUT TO FIT THE ELBOW. INSULATE DUCT STIFFENERS, HANGERS, AND FLANGES THAT PROTRUDE BEYOND INSULATION SURFACE WITH 6–INCH– (150–MM–) WIDE STRIPS OF SAME MATERIAL USED TO INSULATE DUCT. SECURE ON ALTERNATING SIDES OF STIFFENER, HANGER, AND FLANGE WITH PINS SPACED 6 INCHES (150 MM) D.C.

STATE OF TEXAS
JANET MURRAY HOFFMAN
102117
LICENSED
PROFESSIONAL ENGINEER

The seal appearing on this document was authorized by JANET MURRAY HOFFMAN P.E. 102117 8/10/2018

GALVESTON COUNTY
BEACH PAVILION
CRYSTAL BEACH, TX 77650

BE–Arc LLC Project No : C–13–007.01

Ibis Engineering
REG # F–11156
P.O. Box 49171
Galveston, Texas 77555
PH 409.621.6740

THIS PRINT IS THE PROPERTY OF IBIS ENGINEERING AND MAY NOT BE USED OR REPRODUCED IN ANY MANNER WHATSOEVER WITHOUT WRITTEN PERMISSION FROM IBIS ENGINEERING.

easterwood
ARCHITECTS STUDIO
409-354-8976
EASTERWOOD@BE-ARC.COM
2328 BALL STREET
GALVESTON TEXAS 77550

DATE	REVISION

BID SET

DATE ISSUED:
8/10/2018

COPYRIGHT 2018

M3.0

COUNTY APPROVAL:
SIGNATURE _____ DATE_____

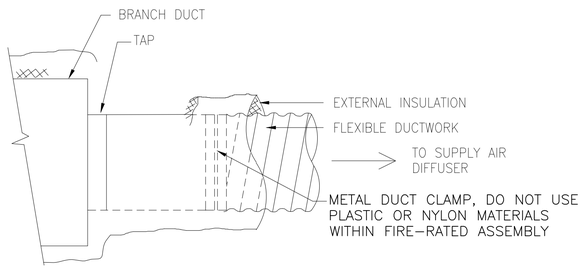

FLEXIBLE DUCT TAP
SCALE: NONE

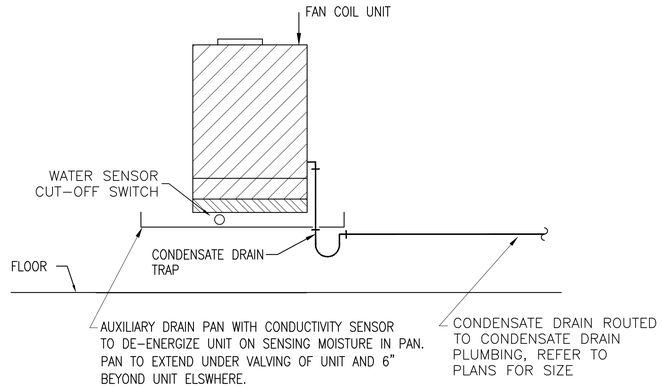

CONDENSATE DRAIN
SCALE: NONE

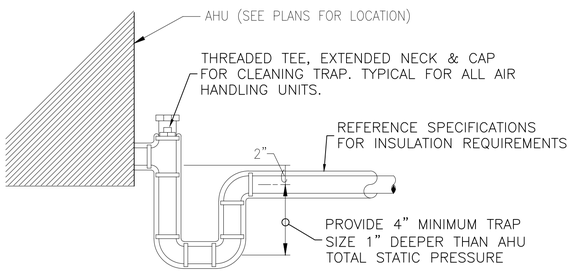

5 CONDENSATE DRAIN PIPING AT FCU
SCALE: NONE

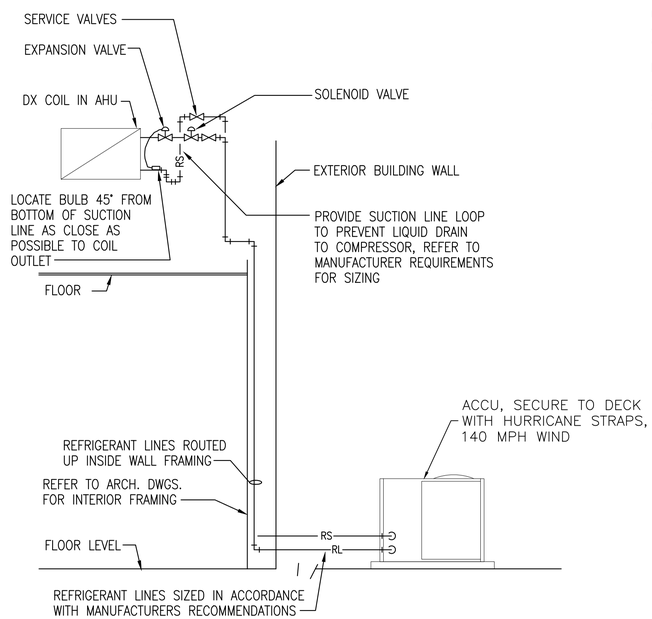

REFRIGERANT PIPING DETAIL
SCALE: NONE

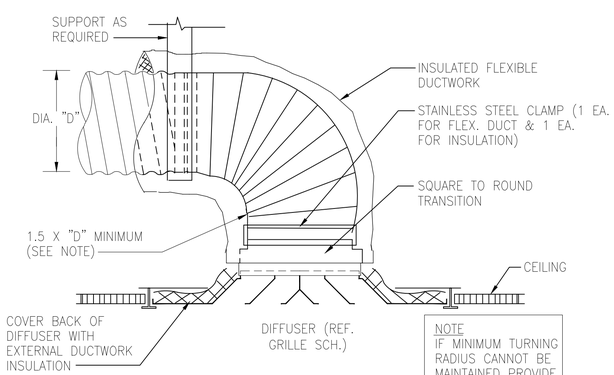

1 FLEX DUCT DETAIL
Scale: N.T.S.

SCHEDULE OF EXHAUST FANS

UNIT DESIGNATION		EF-1	EF-2
LOCATION		CEILING	CEILING
SERVICE		OFFICE BATH.	PUBLIC BATH
FAN TYPE		CENTRIFUGAL	CENTRIFUGAL
DRIVE TYPE		DIRECT	DIRECT
AIR VOLUME CFM		94	300
EXT. STATIC PRESSURE- IN W. G.		0.5	0.5
FAN RPM		950	1,350
MOTOR HP.		80W	144 W
	VOLTS	120	120
	PHASE	1	1
	HZ	60	60
CONTROL SEQUENCE TYPE			
ACCESSORIES *		BD	BD
MANUFACTURER / SERIES BASIS FOR DESIGN		GREENHECK SP-B110	GREENHECK CSP-A390
REMARKS / NOTES			

* BS - BIRDSCREEN; BD - BACKDRAFT DAMPER; MBO - MOTORIZED BACKDRAFT DAMPER; SC - SOUND ATTENUATING CURB; SI - INLET SCREEN; WH - WEATHERPROOF MOTOR HEAD: WC - WALL COLLAR;

NOTES

1. FAN TO BE CONTROLLED BY TIME CLOCK.
2. PROVIDE WITH FACTORY FURNISHED, UNIT MOUNTED DISCONNECT SWITCH.

3. INTERLOCK WITH AHU-1

4. PROVIDE GREASE BOX

SCHEDULE OF SPLIT SYSTEMS W/ ELECTRIC HEAT

UNIT DESIGNATION		AHU - 1	CU-1	AHU-2	CU-2
SERVICE		Office		Store Room	
LOCATION		CEILING HUNG	OUTSIDE	FLOOR MOUNT	OUTSIDE
ROOM DESIGN TEMPERATURE F° D. B.		78/ 55% RH		78/55% RH	
	TOTAL AIR VOLUME /CFM	2000		300	
	OUTSIDE AIR VOLUME / CFM (SUMMER & WINTER)	200		75	
	FAN TYPE	BELT		BELT	
	FAN SPEED MAXIMUM R. P. M.	965		965	
	EXT. STATIC PRESS. INCL. FILTERS IN W.G.***	1.0		1.0	
	MAXIMUM FAN MOTOR H. P.	1		0.5	
	TOTAL AIR VOLUME /CFM	2000		300	
	ENTERING AIR TEMP . F° - D. B. / W. B.	82.4/73.8		82.6/74	
	LEAVING AIR TEMP. F° - D. B. / W. B.	54.7/52.7		54.7/52.7	
	TOTAL SENSIBLE HEAT MBh **	23.9		18.4	
	GRAND TOTAL HEAT MBh	55.4		3.1	
	TOTAL AIR VOLUME /CFM	2000		300	
	ENTERING AIR TEMPERATURE F°	54.8		68.3	
	INPUT - KW	8		5	
	CONTROL STEPS	2 STAGES		1 STAGES	
	UNIT VOLTAGE / PHASE	208/3	208/3	208/1	208/1
	MCA / MOCP				
	UNIT TYPE	SPLIT		SPLIT	
	DUCT LOCATION	HORIZ. SUPPLY, HORIZ. RETURN		VERT. SUPPLY, VERT. RET.	
	OUTDOOR AIR DB TEMP. F° (SUMMER / WINTER)		89/37		89/37
	EER		11.5		16
MANUFACTURER MODEL		CARRIER FX4DNB061T008	CARRIER CA16NA060	MITSUBISHI PVA-A12	MITSUBISHI PUZ-A12
REMARKS / NOTES		3,4,5	1,2	3,4,5	1,2

* DIVISION 15 CONTRACTOR SHALL BE RESPONSIBLE FOR COORDINATING CIRCUIT BREAKER SIZE WITH DIVISION 16 CONTRACTOR

** SCHEDULED SENSIBLE HEAT DOES NOT INCLUDE MOTOR HEAT.

*** EXTERNAL STATIC PRESSURE INCLUDES FILTER RESISTANCE.

NOTES

1. PROVIDE HURRICANE TIE-DOWN AND MOUNTING
2. PROVIDE FOR LOW AMBIENT OPERATION, VSD
3. PROVIDE DUCT MOUNTED SMOKE DETECTORS FOR UNITS MEETING OR EXCEEDING 2000 CFM
4. MECHANICAL CONTRACTOR SHALL PROVIDE ALL NECESSARY STEP-DOWN TRANSFORMERS FOR LOW VOLTAGE CONTROLS WIRING. ELECTRICAL CONTRACTOR SHALL PROVIDE NECESSARY POWER TO TRANSFORMER.
5. PROVIDE AUTOMATIC OUTSIDE AIR DAMPENER CONTROLLER AND INTERLOCK WITH CU.

STATE OF TEXAS
JANET MURRAY HOFFMAN
102117
LICENSED PROFESSIONAL ENGINEER

The seal appearing on this document was authorized by JANET MURRAY HOFFMAN P.E. 102117 8/10/2018

GALVESTON COUNTY
BEACH PAVILION
CRYSTAL BEACH, TX 77650

BE–Arc LLC Project No : C–13–007.01

Lbis Engineering
REG # F–11156
P.O. Box 457?
Gonzales, Texas 77655
PH 409.621.6740

THIS PRINT IS THE PROPERTY OF IBES ENGINEERING AND MAY NOT BE REPRODUCED IN ANY MANNER NOR DISCLOSED TO ANY OTHER PERSONS OR ENTITIES WITHOUT WRITTEN CONSENT FROM IBES ENGINEERING.

easterwood
ARCHITECTS STUDIO
409-354-8976
EASTERWOOD@BE-ARC.COM
2328 BALL STREET
GALVESTON TEXAS 77550

DATE	REVISION

BID SET

DATE ISSUED:
8/10/2018

COPYRIGHT 2018

M4.0

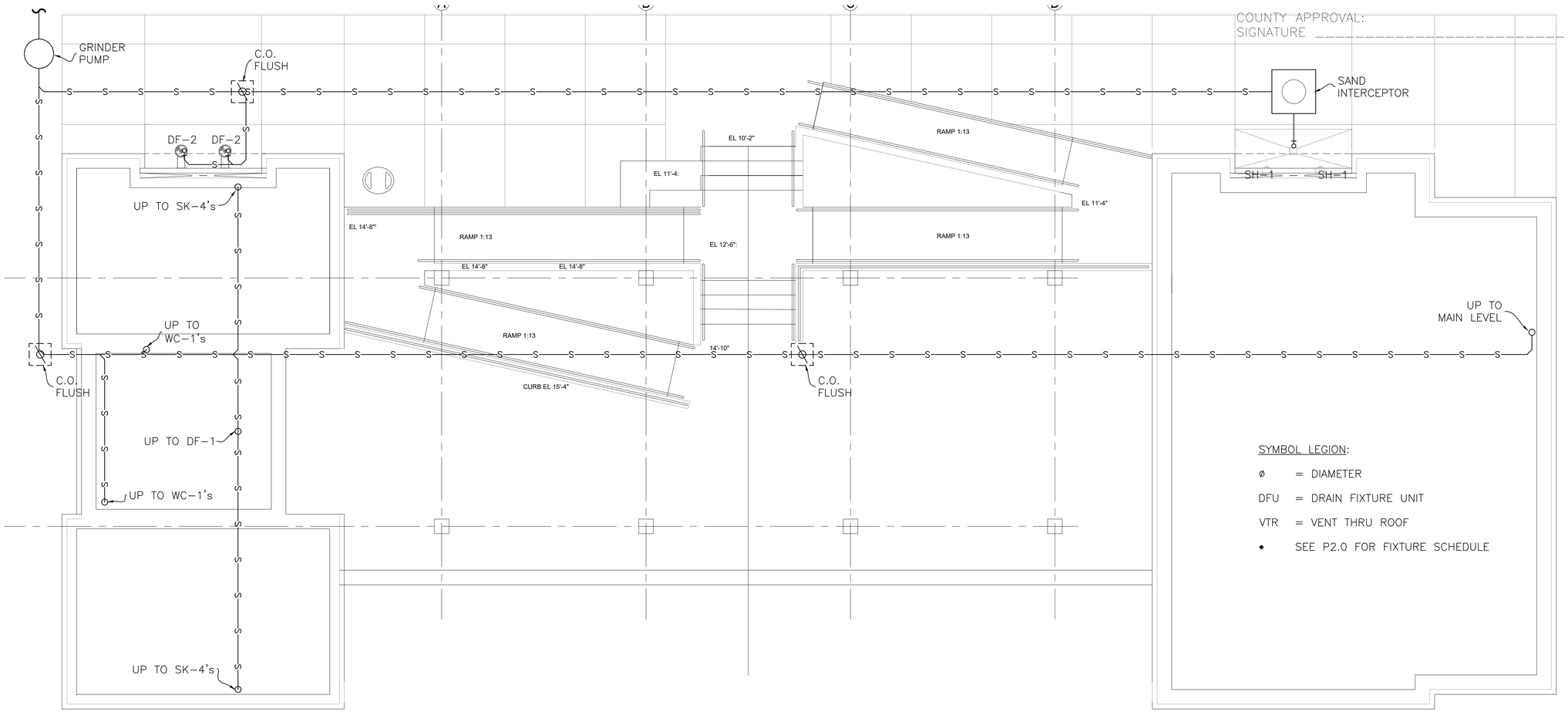

COUNTY APPROVAL:
SIGNATURE _____ DATE_____

SYMBOL LEGION:

ø = DIAMETER

DFU = DRAIN FIXTURE UNIT

VTR = VENT THRU ROOF

• SEE P2.0 FOR FIXTURE SCHEDULE

1 LOWER LEVEL
PLUMBING PLAN
SCALE: 1/4" = 1'-0"

STATE OF TEXAS
NORMAN S. HOFFMAN
95483
LICENSED
PROFESSIONAL ENGINEER

The seal appearing on this document was authorized by NORMAN HOFFMAN P.E. 95483 8/10/2018

GALVESTON COUNTY
BEACH PAVILION
CRYSTAL BEACH, TX 77650

BE-Arc LLC Project No : C-13-007.01

Ibis Engineering
REG # F-11156
P.O. Box 457
Gainesville, Texas 76255
PH 409.521.6740

THIS PRINT, THE PROPERTY OF IBIS ENGINEERING, MAY NOT BE REPRODUCED IN ANY MANNER NOR DISTRIBUTED TO ANY OTHER PERSONS OR ENTITIES WITHOUT THE WRITTEN PERMISSION FROM IBIS ENGINEERING.

easterwood
ARCHITECTS STUDIO

409-354-8976
EASTERWOOD@BE-ARC.COM

2328 BALL STREET
GALVESTON TEXAS 77550

DATE	REVISION

BID SET

DATE ISSUED:
8/10/2018

COPYRIGHT 2018

P1.0

COUNTY APPROVAL:
SIGNATURE _____ DATE_____

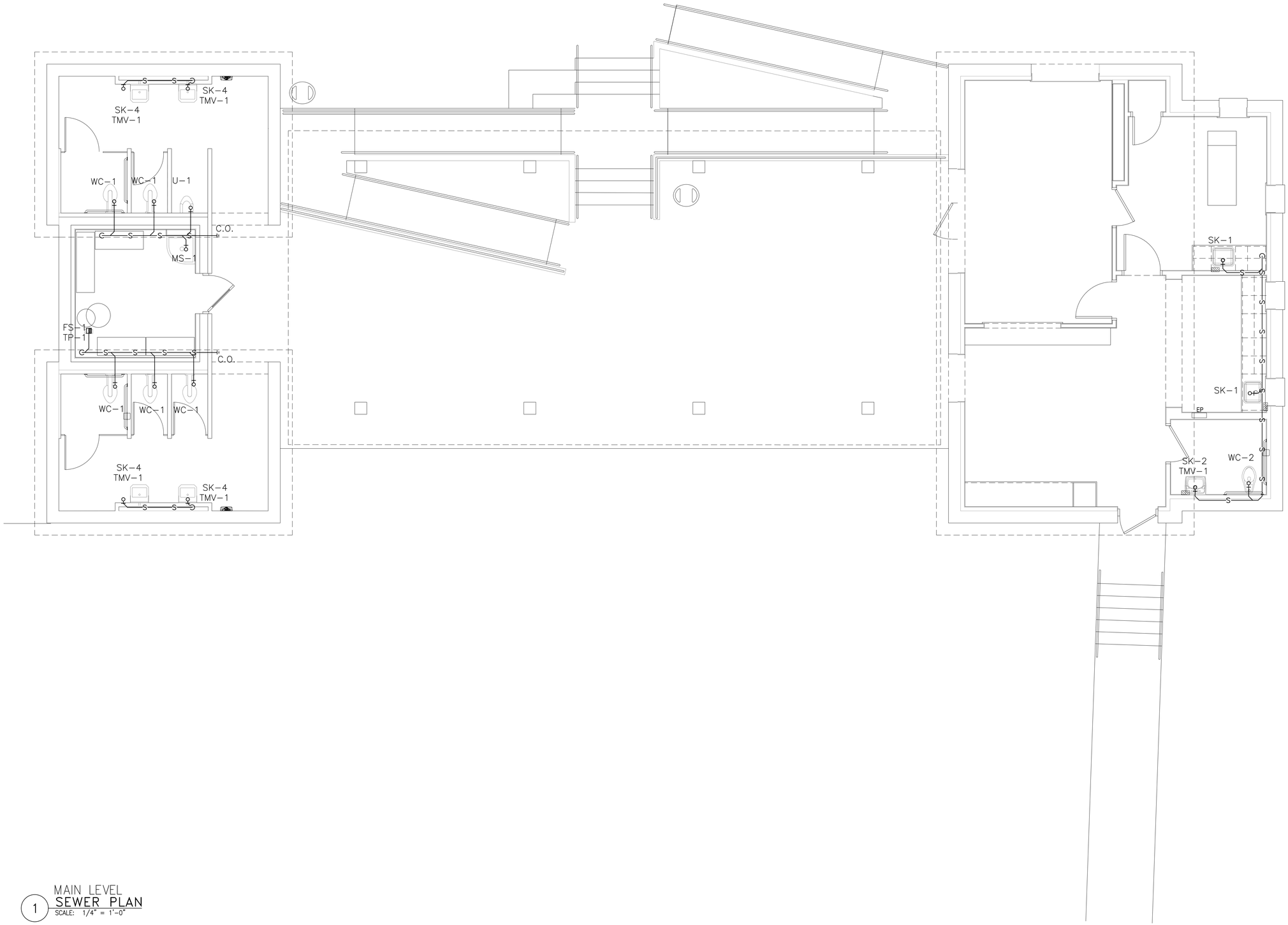

1 MAIN LEVEL
SEWER PLAN
SCALE: 1/4" = 1'-0"

STATE OF TEXAS
NORMAN S. HOFFMAN
95483
LICENSED
PROFESSIONAL ENGINEER

The seal appearing on this document was authorized by NORMAN HOFFMAN P.E. 95483 8/10/2018

GALVESTON COUNTY
BEACH PAVILION
CRYSTAL BEACH, TX 77650

BE-Arc LLC Project No : C-13-007.01

bis Engineering
REG # F-11156
P.O. Box 457
Gainesville, Texas 76255
PH 409.521.6740

THIS PRINT, THE PROPERTY OF BIS ENGINEERING, MAY NOT BE REPRODUCED IN ANY MANNER NOR DERIVATIVE WORKS PREPARED THEREFROM, IN WHOLE OR IN PART, WITHOUT PRIOR WRITTEN CONSENT FROM BIS ENGINEERING.

easterwood
ARCHITECTS STUDIO

409-354-8976
EASTERWOOD@BE-ARC.COM

2328 BALL STREET
GALVESTON TEXAS 77550

DATE	REVISION

BID SET

DATE ISSUED:
8/10/2018

COPYRIGHT 2018

P1.1

COUNTY APPROVAL:
SIGNATURE _____ DATE_____

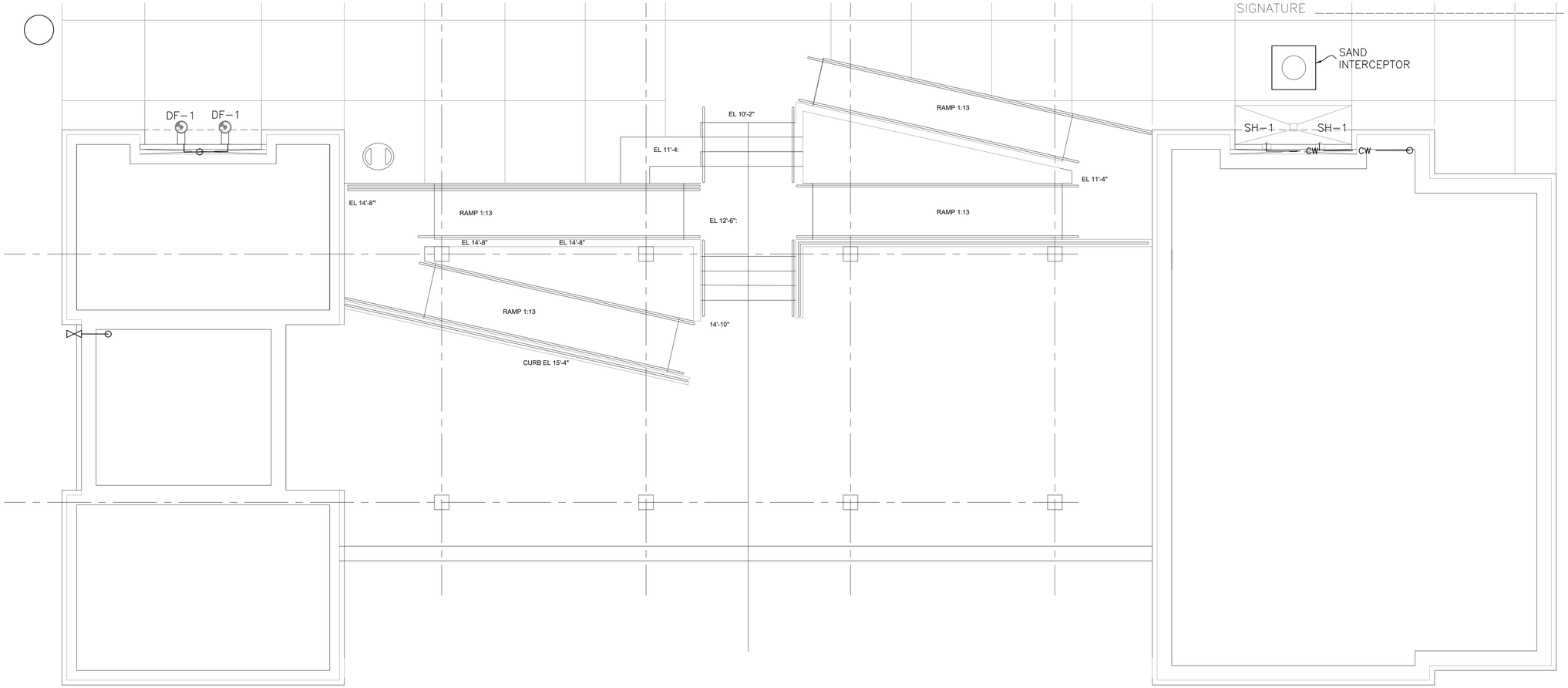

1 LOWER LEVEL
HOT & COLD WATER PLAN
SCALE: 1/4" = 1'-0"

STATE OF TEXAS
NORMAN S. HOFFMAN
95483
LICENSED
PROFESSIONAL ENGINEER

The seal appearing on this document was authorized by NORMAN HOFFMAN P.E. 95483 8/10/2018

GALVESTON COUNTY
BEACH PAVILION
CRYSTAL BEACH, TX 77650

BE-Arc LLC Project No : C-13-007.01

bis Engineering
REG # F-11156
P.O. Box 457
Gainesville, Texas 76255
PH 409.521.6740

THIS PRINT, OR THE PROPERTY OF BIS ENGINEERING, MAY NOT BE COPIED OR REPRODUCED IN ANY MANNER NOR USED FOR ANY PURPOSE WHATSOEVER WITHOUT PRIOR WRITTEN CONSENT FROM BIS ENGINEERING.

easterwood
ARCHITECTS STUDIO
409-354-8976
EASTERWOOD@BE-ARC.COM
2328 BALL STREET
GALVESTON TEXAS 77550

DATE	REVISION

BID SET

DATE ISSUED:
8/10/2018

COPYRIGHT 2018

P1.2

COUNTY APPROVAL:
SIGNATURE _____ DATE_____

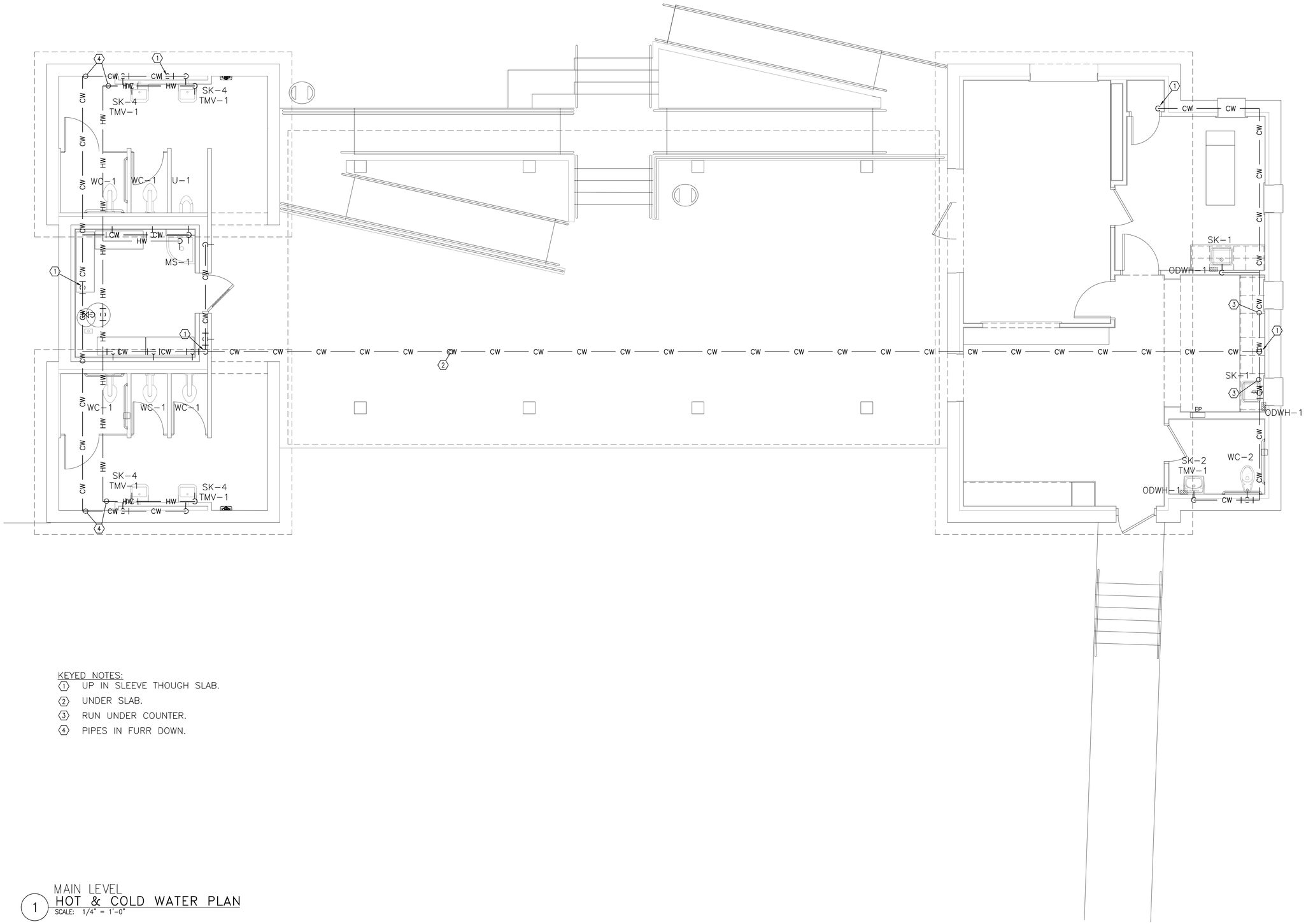

KEYED NOTES:

1. UP IN SLEEVE THOUGH SLAB.
2. UNDER SLAB.
3. RUN UNDER COUNTER.
4. PIPES IN FURR DOWN.

1 MAIN LEVEL
HOT & COLD WATER PLAN
SCALE: 1/4" = 1'-0"

STATE OF TEXAS
NORMAN S. HOFFMAN
95483
LICENSED PROFESSIONAL ENGINEER

The seal appearing on this document was authorized by NORMAN HOFFMAN P.E. 95483 8/10/2018

GALVESTON COUNTY BEACH PAVILION CRYSTAL BEACH, TX 77650

BE-Arc LLC Project No : C-13-007.01

Lbis Engineering
REG # F-11156
P.O. Box 457
Gainesville, Texas 77255
PH 409.521.6740

THIS PRINT, THE PROPERTY OF BES ENGINEERING, MAY NOT BE REPRODUCED IN ANY MANNER NOR DISTRIBUTED TO ANY PERSON OR PERSONS, IN WHOLE OR IN PART, WITHOUT PRIOR WRITTEN CONSENT FROM BES ENGINEERING.

easterwood
ARCHITECTS STUDIO
409-354-8976
EASTERWOOD@BE-ARC.COM
2328 BALL STREET
GALVESTON TEXAS 77550

DATE	REVISION

BID SET

DATE ISSUED:
8/10/2018

COPYRIGHT 2018

P1.3

COUNTY APPROVAL:
SIGNATURE _____ DATE_____

Missing or invalid reference
File: C:\Users\GD\Documents\Dwg\Galveston County Beach Pavilion\Specs\PLUMBING SPECS\Eemax Instant Hot Water.pdf
Sheet: 1

Missing or invalid reference
File: C:\Users\GD\Documents\Dwg\Galveston County Beach Pavilion\Specs\PLUMBING SPECS\Eemax Instant Hot Water.pdf
Sheet: 2

Missing or invalid reference
File: C:\Users\GD\Documents\Dwg\Galveston County Beach Pavilion\Specs\PLUMBING SPECS\Faucet 5601 series_sub.pdf
Sheet: 1

Missing or invalid reference
File: C:\Users\GD\Documents\Dwg\Galveston County Beach Pavilion\Specs\PLUMBING SPECS\Faucet 5601 series_sub.pdf
Sheet: 1

GALVESTON COUNTY
BEACH PAVILION
CRYSTAL BEACH, TX 77650

BE-Arc LLC Project No : C-13-007.01

ibis Engineering
REG. # F-11156
2328 Ball Street
P.O. Box 50171
Galveston, Texas 77255
(713) 893-7100 Fax

THIS PRINT IS THE PROPERTY OF IBIS ENGINEERING AND MAY NOT BE REPRODUCED IN ANY MANNER NOR SHALL IT BE SUBMITTED WITHOUT PRIOR WRITTEN CONSENT OF IBIS ENGINEERING.

easterwood
ARCHITECTS STUDIO
2328 BALL STREET
GALVESTON TEXAS 77550
409-354-8976
EASTERWOOD@BE-ARC.COM

DATE	REVISION

BID SET

DATE ISSUED:
8/10/2018

COPYRIGHT 2018

STATE OF TEXAS
NORMAN S. HOFFMAN
95483
PROFESSIONAL ENGINEER

The seal appearing on this document was authorized by NORMAN HOFFMAN P.E. 95483 8/10/2018

P2.0

COUNTY APPROVAL:
SIGNATURE _____ DATE_____

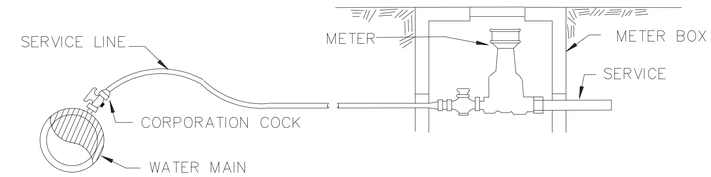

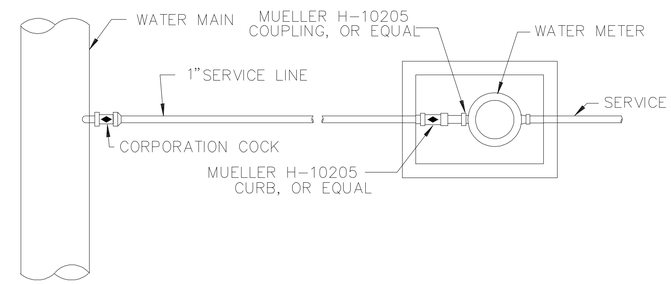

Missing or invalid reference
File: C:\Users\GD\Documents\Dwg\Galveston County Beach Pavilion\Specs\PLUMBING SPECS\TMV Watts es-lfusg-b-m2.pdf
Sheet: 1

Missing or invalid reference
File: C:\Users\GD\Documents\Dwg\Galveston County Beach Pavilion\Specs\PLUMBING SPECS\TMV Watts es-lfusg-b-m2.pdf
Sheet: 2

GALVESTON COUNTY
BEACH PAVILION
CRYSTAL BEACH, TX 77650

BE-Arc LLC Project No : C-13-007.01

bis Engineering
REG. # F-11156
P.O. Box 55171
Galveston, Texas 77555
(713) 952-2100
THIS PRINT IS THE PROPERTY OF BIS ENGINEERING AND MUST BE RETURNED OR REPRODUCED IN ANY MANNER NOT SHALL BE SUBMITTED WITHOUT PRIOR WRITTEN CONSENT OF BIS ENGINEERING.

easterwood
ARCHITECTS STUDIO
2328 BALL STREET
GALVESTON TEXAS 77550
409-354-8976
EASTERWOOD@BE-ARC.COM

DATE	REVISION

BID SET

DATE ISSUED:
8/10/2018

COPYRIGHT 2018

STATE OF TEXAS
NORMAN S. HOFFMAN
95483
LICENSED
PROFESSIONAL ENGINEER

The seal appearing on this document was authorized by NORMAN HOFFMAN P.E. 95483 8/10/2018

P2.1

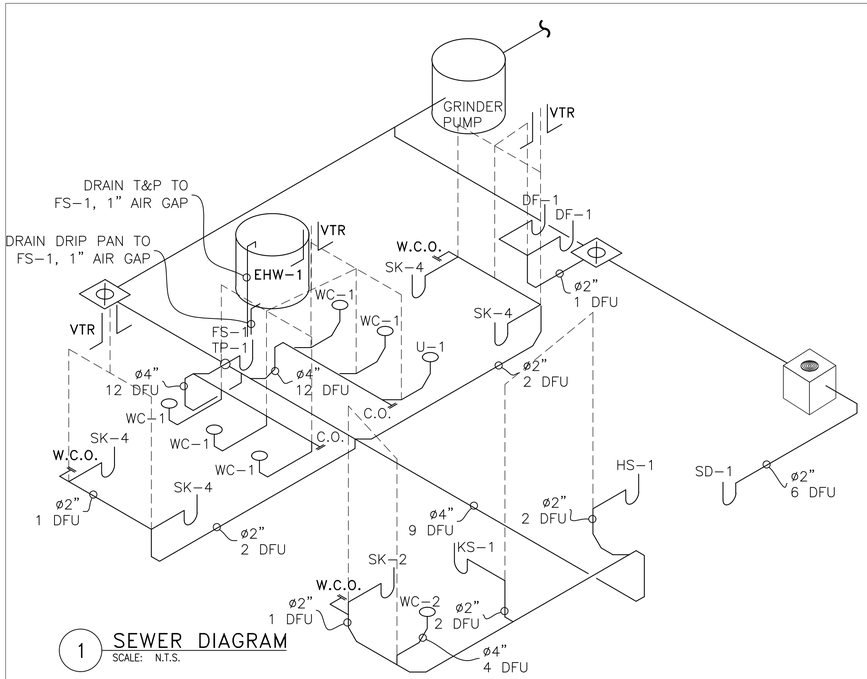

1 SEWER DIAGRAM
SCALE: N.T.S.

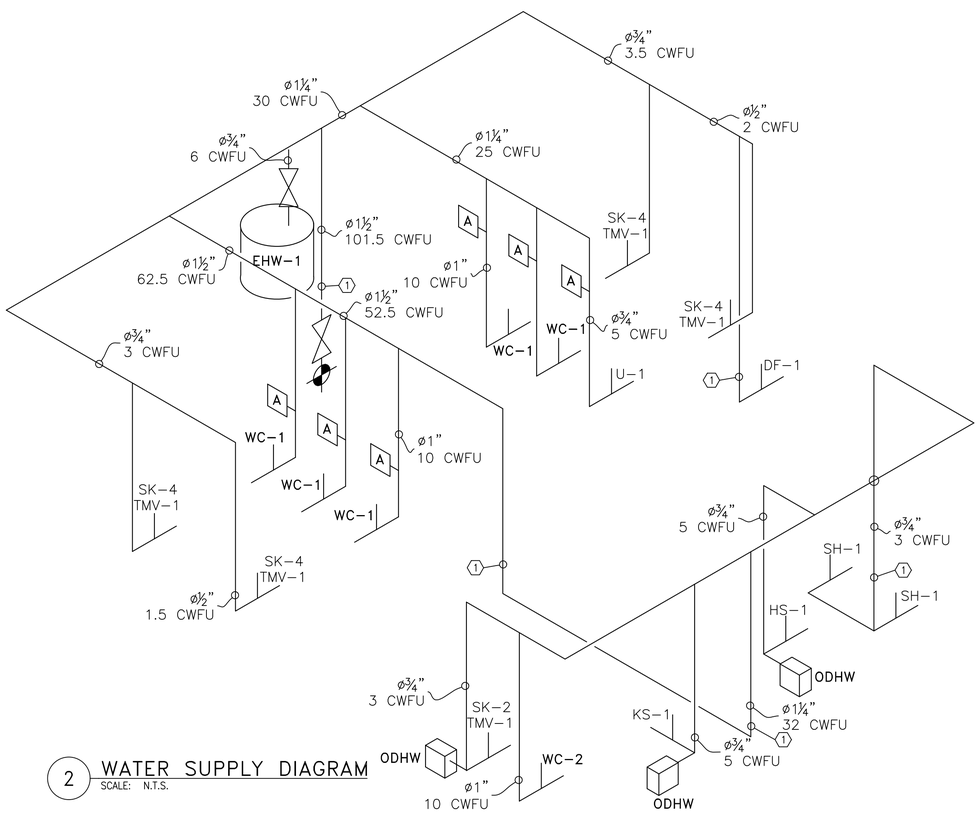

2 WATER SUPPLY DIAGRAM
SCALE: N.T.S.

COUNTY APPROVAL:
SIGNATURE _____ DATE_____

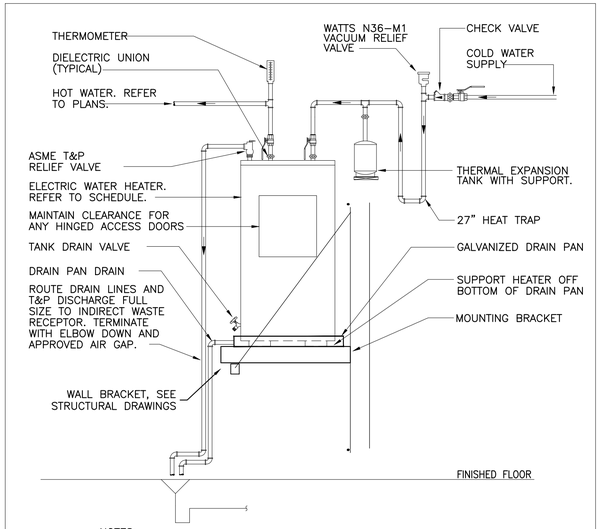

NOTES:
1. PROVIDE 1" PIPE INSULATION HAVING A CONDUCTIVITY NOT EXCEEDING 0.28 BTU PER INCH/HR x S.F. x °F ON ALL DOMESTIC HOT WATER AND RETURN PIPING.
2. PROVIDE AQUASTAT CONTROL OF HOT WATER CIRCULATING PUMP. RE: PLANS AND HOT WATER CIRCULATING PUMP DETAIL.

1 ELECTRIC WATER HEATER PIPING
SCALE: NONE

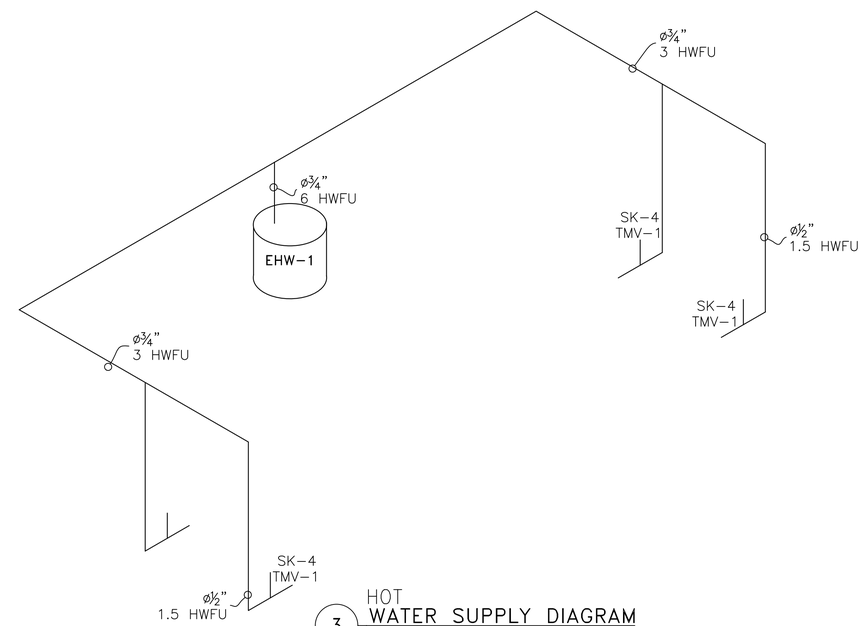

3 HOT WATER SUPPLY DIAGRAM
SCALE: N.T.S.

STATE OF TEXAS
NORMAN S. HOFFMAN
95483
PROFESSIONAL ENGINEER

The seal appearing on this document was authorized by NORMAN HOFFMAN P.E. 95483 8/10/2018

GALVESTON COUNTY
BEACH PAVILION
CRYSTAL BEACH, TX 77650

BE-Arc LLC Project No : C-13-007.01

Ibis Engineering
REG # F-11156
P.O. Box 45171
Galveston, Texas 77555
PH 409.621.6740

easterwood
ARCHITECTS STUDIO
409-354-8976
EASTERWOOD@BE-ARC.COM
2328 BALL STREET
GALVESTON TEXAS 77550

THIS PRINT, IT THE PROPERTY OF IBIS ENGINEERING, MAY NOT BE USED OR REPRODUCED IN ANY MANNER NOR TRANSFERRED TO ANY OTHER PARTY WITHOUT PRIOR WRITTEN CONSENT FROM IBIS ENGINEERING.

DATE	REVISION

BID SET

DATE ISSUED:
8/10/2018

COPYRIGHT 2018

P2.2

COUNTY APPROVAL:
SIGNATURE ______________________________ DATE______________

Willoughby Industries - *Parks and Recreation*

WILLOUGHBY

WODF-1WM Series
Wall Mounted
Outdoor Drinking Fountain

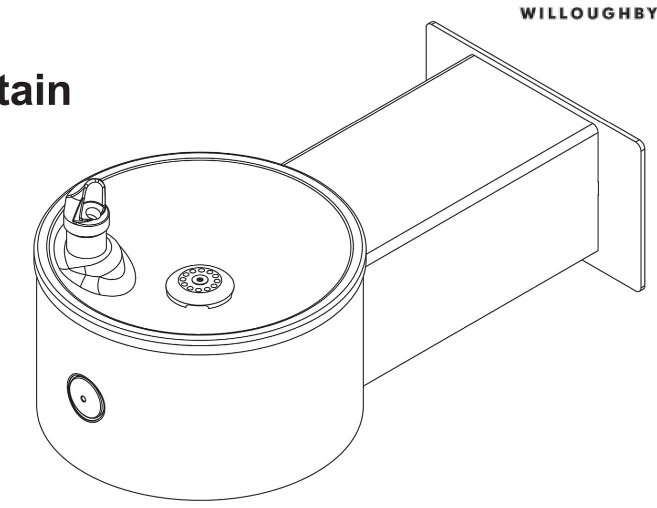

IN COMPLIANCE WITH A.D.A. 2010

Recommended Specifications

Willoughby Model **WODF-1WM** wall mounted outdoor drinking fountain is a single-level, vandal resistant drinking fountain with Type 304 stainless steel 10" Schedule-10 main column and 7 GA. flange.

Fountain shall have high-polished, 18 GA. stainless steel bowl with anti-rotation, anti-squirt, solid stainless steel bubbler. Bubbler shall be activated by pedestal mounted solid stainless steel push button assembly, which controls a lead-free, self-closing valve.

Push button shall require less than 5 lbs. of force to operate. Push button shall be adjustable to ensure adequate flow without being wasteful. **WODF-1WM** fountain shall be lead-free, adhering to ANSI/NSF 61, Section 9, ANSIA117.1.

When the drinking fountain bowl is mounted at an appropriate height (34" max A.F.F. for Adult ADA, 31" max A.F.F. for JR. ADA), it shall meet American Disabilities Act of 2010 (ADA) compliance requirements.

Standard Features

* Adult ADA or Child (JR.) ADA compliant
* 5/32" wall thickness stainless steel wall column
* ~~Heavy duty Type 304 stainless steel 10" Schedule 10 main column and 7 GA. flange~~
* ~~Optional~~ marine-grade Type 316 stainless steel body for installations near salt water
* High polished stainless steel bowl
* Solid stainless steel, anti-rotation bubbler
* Serviceable mesh strainer on inlet water supply
* Heavy-duty main access panel
* Resistant to sunlight, heat and vandalism
* Stainless steel adjustable push button

To specify fixture and color, use the Model Number and Options Guide.
Example: To specify a WODF-1WM wall mounted outdoor drinking fountain in Blue color
Use the following Willoughby Model Number: **WODF-1WM-BL**

MODEL NUMBER AND OPTIONS:

1.) Outdoor Drinking Fountain Type:
- ❑ WODF-1WM Wall Mounted Outdoor Drinking Fountain

2.) Options:
- ❑ 316-1 316 Stainless Steel Body, Single
- ❑ SCV Seasonal Bowl Cover (1)

3.) Colors (select one):
- ❑ SL Silver (Silvadillo)
- ❑ G Green
- ❑ R Red
- ❑ BL Blue
- ❑ O Orange
- ❑ V Violet
- ❑ Y Yellow
- ❑ BR Brown
- ❑ BK Black
- ❑ BE Beige
- ❑ W White

Approved For Manufacturing By: ____________ Date: ________ Company: ____________
Wall Thickness: ____________ Wall Type: ____________

IN COMPLIANCE WITH A.D.A. 2010

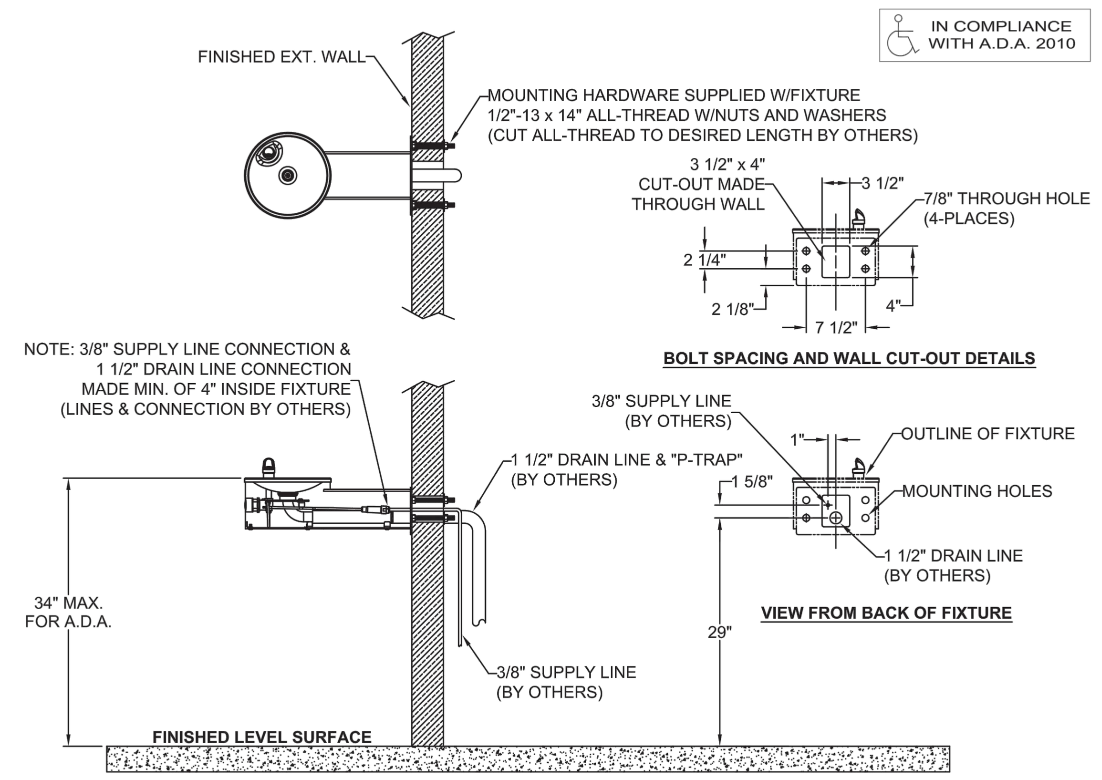

VERIFY ALL DIMENSIONS WITH FACTORY PRIOR TO ROUGH-IN
WILLOUGHBY RESERVES THE RIGHT TO MAKE CHANGES IN DESIGN AND DIMENSIONS WITHOUT FORMAL NOTICE AND WITHOUT INCURRING OBLIGATION.

Willoughby Industries - *Security Products*

WILLOUGHBY

ETWS-1490-FM
Wall Outlet
Floor Mounted
Siphon Jet Series
Water Closet

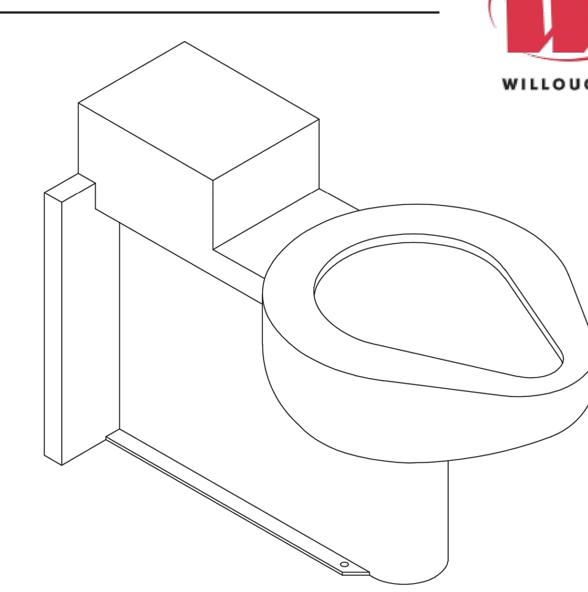

IN COMPLIANCE WITH A.D.A. 2010
* USE "HC" SUFFIX FOR 18" A.F.F.SEAT HEIGHT

(1.6 GPF UNIT W/ 15" A.F.F. SEAT HEIGHT* SHOWN)
(Unit may be shown with optional features)

To specify fixture and accessories, use the Model Number and Options page.
Example: To specify a Wall Outlet, Floor Mounted, Siphon Jet Series Toilet with back spud, standard 15" seat height, 1.6 GPF, toilet waste extension, 3" PVC waste connection, hydraulic flush valve, flush valve connection, high polish seat, wall sleeve, and toilet shipping cover
Use the following Willoughby Model Number: **ETWS-1490-FM-BS-1.6-TWE-TWC3P-FV-FVT-HPS-WS-TSC**

Recommended Specifications

Wall Outlet, Floor Mounted, Siphon Jet Series Toilet shall be:
Willoughby Model No. **ETWS-1490-FM**
(Select from model number and options list on next page)

Fixture shall be fabricated from 14 gauge, type 304 stainless steel. The construction shall be all welded, with exposed stainless surfaces polished to a #4 satin finish.

Standard toilet shall include:
- Elongated toilet bowl with contoured seat
- Integral crevice-free self-draining flushing rim with positive afterfill
- Fully enclosed 2-1/2" O.D. trap which shall maintain a minimum 2" seal and pass a 2-1/8" ball
- Bead blast finish bowl interior

Toilet shall be siphon jet type, requiring 35 PSI minimum flushing pressure. Model shall meet the requirements of ASME A112.19.3/ CSA B45.4.

Fixture shall withstand loadings of 5,000 lbs. without permanent damage.

Anchoring shall be by standard 6-point system (4 in the wall and 2 in the floor): threaded rods, nuts and washers shall be furnished for walls up to 8" thick. Floor anchoring hardware by others.

Unit shall require chase area for installation and maintenance.

On back to back fixture installations, do not use standard cross type waste fitting: cross flow may result due to blowout jet action. Use sanitary or offset type waste fittings.

Note: For HET 1.28 GPF, unit will pass a 2" ball.

MODEL NUMBER AND OPTIONS:

1.) Base Model Number:
- ❑ ETWS-1490-FM Wall Outlet, Floor Mounted, Siphon Jet Series Toilet

2.) Inlet Location:
- ❑ BS Back Spud
- ❑ TS Top Spud

3.) Toilet Seat Height:
- ❑ 15" Seat Height (Standard)
- ❑ HC 18" Seat Height, Handicap-ADA Compliant

4.) Flush Valve GPF (Must Specify):
- ❑ 1.28 GPF HET
- ❑ 1.6 GPF ULF (Standard)
- ❑ 3.5 GPF (3" waste tube required)

5.) Toilet Waste:
- ❑ TWE Toilet Waste Extension (Standard)
- ❑ TW3 3" Clean-out for (TWE)
- ❑ TW5 4" Clean-out for (TWE)
- ❑ GWC Gasketed Waste Connection
- ❑ WO3 3" Toilet 'P' Trap (3.5 GPF Only)
- ❑ PC3 Pinned Clean-out Plug PVC-3"
- ❑ PCB3 Pinned Clean-out Plug Brass-3"
- ❑ PC4 Pinned Clean-out Plug PVC-4"
- ❑ PCB4 Pinned Clean-out Plug Brass-4"
- ❑ COH4 4" Clean-out Hook, 4" PVC Plug

6.) Waste Coupling for (TWE) Toilet Waste Extension:
- ❑ TWC3P Connecting to 3" PVC
- ❑ TWC3C Connecting to 3" Cast Iron
- ❑ TWC4P Connecting to 4" PVC
- ❑ TWC4C Connecting to 4" Cast Iron

7.) Other Options:
- ❑ T4 Manual Reset Toilet Overflow Preventer, Requires: (FV) Hydraulic Flush Valve and Accessible Chase
- ❑ T4A Auto Reset Toilet Overflow Preventer, Requires: (FV) Hydraulic Flush Valve and Accessible Chase
- ❑ ET4 Electronic Toilet Overflow Preventer*, Requires (EFV), Accessible Chase, & (WUCC-3010) or (WMSII) control
- ❑ FV Hydraulic Flush Valve (Includes Actuator)
- ❑ EFV Electronic Flush Valve (Pick Control)*
- ❑ EFVP Electronic Flush Valve w/ (PZPB) Piezo Push Button (Pick Control)*
- ❑ TFE Toilet Flush Extension
- ❑ FVT Flush Valve Connection (Back Spud Only)
- ❑ ASFVC Flush Valve Cover (Ligature-resistant, Top Spud Only)
- ❑ ASFVCADA Ligature-resistant ADA Flush Valve Cover (Top Spud Only)
- ❑ AP Flush Valve Access Panel (Allows access to chase mounted flush valve from fixture side)
- ❑ HS Hinged White Plastic Seat (No Cover, not recommended for Maximum Security/Ligature-resistant use)
- ❑ DC Decorator Color (Fixture exterior only - White)
- ❑ TF24H Hard-wired Transformer, 110VAC to 24VAC*
- ❑ TF24P Plug-in Transformer, 110VAC to 24VAC*
- ❑ HPS High Polish Seat
- ❑ MT Wall Template
- ❑ WS Wall Sleeve (Requires Accessible Chase)
- ❑ TSC Toilet Shipping Cover
- ❑ RTH1 Wall Mounted Recessed Tissue Holder (Rear Mounted, Requires Accessible Chase)
- ❑ RTH2 Wall Mounted Recessed Tissue Holder (Front Mounted, 4-1/2" Depth)
- ❑ Other ____________

8.) Electronic Controls* (Must Use Electronic Flush Valve):
- ❑ WUFC-4000 ❑ Pneutronic ❑ WMSII
- ❑ WUCC-3010 (Select WUCC-3010 Control if pairing a Toilet with a Lavatory or if the Toilet is selected with an (ET4) overflow option)

*(Req. 110V power through ground fault interrupter (GFCI) receptacle)

Approved For Manufacturing By: ____________ Date: ________ Company: ____________
Wall Thickness: ____________ Wall Type: ____________

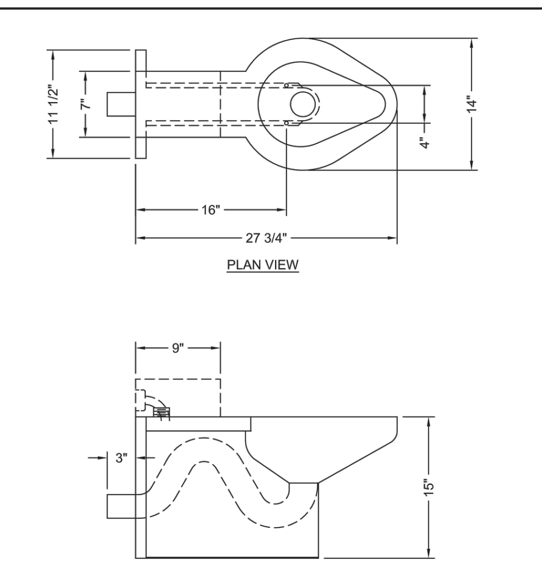

1.6 GPF VERSION SHOWN, 3.5 AND 1.28 MAY VARY IN SIZE.

VERIFY ALL DIMENSIONS WITH FACTORY PRIOR TO ROUGH-IN
WILLOUGHBY RESERVES THE RIGHT TO MAKE CHANGES IN DESIGN AND DIMENSIONS WITHOUT FORMAL NOTICE AND WITHOUT INCURRING OBLIGATION.

Willoughby Industries - *Security Products*

WILLOUGHBY

WRS-BF-FA Series
Front Mounted
Recessed Handicap
Shower Panel
w/ Hand Held Flexshower Head

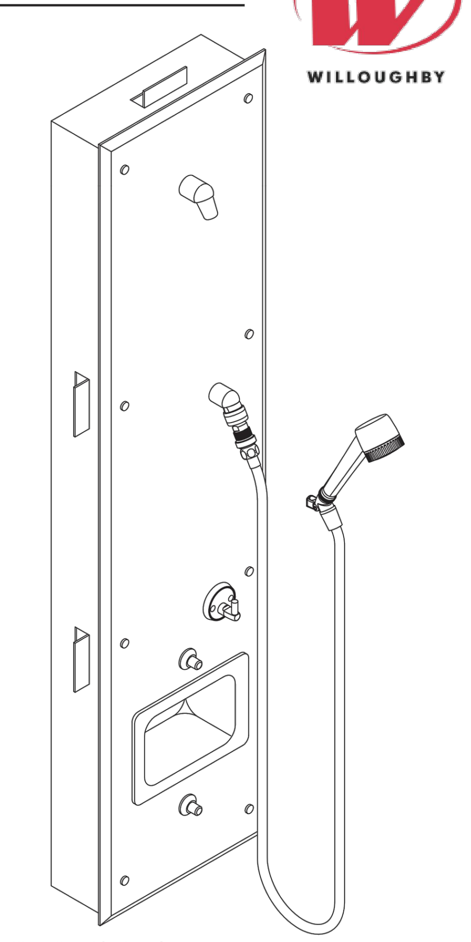

IN COMPLIANCE WITH A.D.A. 2010

(Unit may be shown with optional features)

To specify fixture and accessories, use the Model Number and Options page.
Example: To specify a Front Mounted, Recessed Handicap Shower Panel w/ Hand Held Flexshower Head with left hand controls, single temp. pneumatic metering valves(manifolded), standard pneumatic push buttons, standard 2.5 GPM flow rate, standard (NPS) and (FX) shower heads, in-line thermostatic mixing valve, and recessed mounted soap dish
Use the following Willoughby Model Number: **WRS-BF-FA-L-PML1-MA2-PPB-2.5GPM-NPS-FX-TMV-RD**

Recommended Specifications

Front Mounted, Recessed Handicap Shower Panel w/ Hand Held Flexshower Head shall be:
Willoughby Model No. **WRS-BF-FA**
(Select from model number and options list on next page)

Shower panel shall be fabricated from 14 gauge, Type 304 stainless steel with exposed stainless surfaces polished to a #4 satin finish. Mounting frame shall be fabricated from 18 gauge galvanized steel.

Standard equipment shall include:
- Shower valve (Select from Valve Selection options list)
- (NPS) non-adjustable penal shower head
- (FX) Hand held Flexshower head (w/ quick disconnect, vacuum breaker, and (1) hook)

Shower panel shall attach to mounting frame with vandal resistant stainless steel screws. Unit requires no chase area for installation and maintenance.

MODEL NUMBER AND OPTIONS:

1.) Base Model Number:
- ❑ WRS-BF-FA Front Mounted, Recessed Handicap Shower Panel w/ Hand Held Flexshower Head

2.) Panel Orientation (Must Specify):
- ❑ L Left Hand Controls
- ❑ R Right Hand Controls

3.) Valve Selection:
- ❑ NV No Valve
- ❑ PML1 Single Temp. Pneumatic Metering
- ❑ PML2 Dual Temp. Pneumatic Metering
- ❑ E1L1 Single Temp. Electronic (Pick Control)*
- ❑ E1L2 Dual Temp. Electronic (Pick Control)*

Valve Manifold Option:
Pneumatic or Electronic Valves Only:
(See the Manifold Option Page at the end of Catalog Section S5 for further information)
- ❑ MA2

4.) Push Button Selection:
Pneumatic or Electronic Valves Only:
- ❑ PPB Pneumatic Push Buttons
- ❑ EPB Electronic Push Buttons*
- ❑ PZPB Piezo Push Buttons*

5.) Flow Rates:
- ❑ 2.5 GPM (Standard)
- ❑ 2.0 GPM
- ❑ 1.5 GPM

6.) Electronic Controls* (Must Use Electronic Push Button):
- ❑ WUSC-2200 ❑ WUSC-2400 ❑ Pneutronic ❑ WMS II

7.) Shower Head Selection:
- ❑ NPS Non-adjustable Penal Shower Head (Standard)
- ❑ FX Hand Held Flexshower w/ Quick Disconnect and Vacuum Breaker (Standard)
- ❑ APS Adjustable Penal Shower Head

8.) Options:
- ❑ TMV In-line Thermostatic Mixing Valve
- ❑ TF24H Hard-wired Transformer, 110VAC to 24VAC*
- ❑ TF24P Plug-in Transformer, 110VAC to 24VAC*
- ❑ RD Recessed Mounted Soap Dish
- ❑ SD Surface Mounted Soap Dish
- ❑ Other ____________
- ❑ Other ____________

*(Req. 110V power through ground fault interrupter (GFCI) receptacle)

Approved For Manufacturing By: ____________ Date: ________ Company: ____________
Wall Thickness: ____________ Wall Type: ____________

LEFT HAND CONTROL FIXTURE SHOWN
(RIGHT HAND FIXTURE IS SYMMETRICALLY OPPOSITE)

IN COMPLIANCE WITH A.D.A. 2010

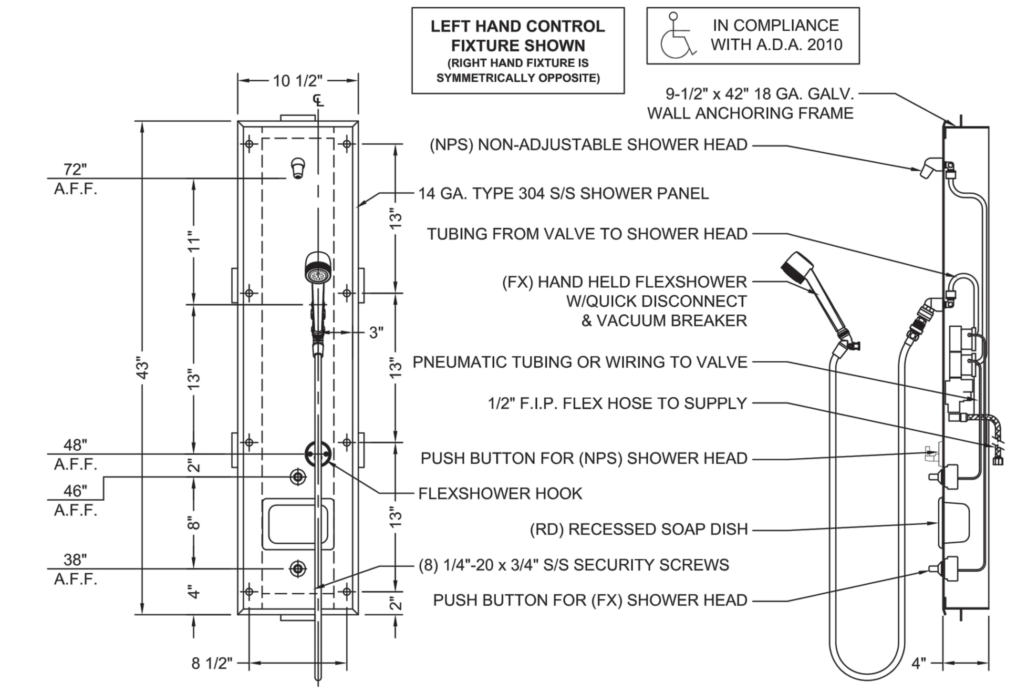

VERIFY ALL DIMENSIONS WITH FACTORY PRIOR TO ROUGH-IN
WILLOUGHBY RESERVES THE RIGHT TO MAKE CHANGES IN DESIGN AND DIMENSIONS WITHOUT FORMAL NOTICE AND WITHOUT INCURRING OBLIGATION.

GALVESTON COUNTY
BEACH PAVILION
CRYSTAL BEACH, TX 77650

BE-Arc LLC Project No : C-13-007.01

Ibis Engineering
REG # F-11156
P.O. Box 55171
Galveston, Texas 77555
PH 409.621.6740
THIS PRINT IS THE PROPERTY OF IBIS ENGINEERING IT MUST NOT BE TRACED OR REPRODUCED IN ANY MANNER NOR SHALL IT BE SUBMITTED WITHOUT PRIOR WRITTEN CONSENT FROM IBIS ENGINEERING.

easterwood
ARCHITECTS STUDIO
409-354-8976
EASTERWOOD@BE-ARC.COM
2328 BALL STREET
GALVESTON TEXAS 77550

DATE	REVISION

BID SET

STATE OF TEXAS
NORMAN S. HOFFMAN
95483
LICENSED PROFESSIONAL ENGINEER

The seal appearing on this document was authorized by NORMAN HOFFMAN P.E. 95483 8/10/2018

DATE ISSUED:
8/10/2018

COPYRIGHT 2018

P2.4

Willoughby Industries - *Commercial Ware*

ES-1015-HC
Handicap
Stainless Steel
Commercial Lavatory

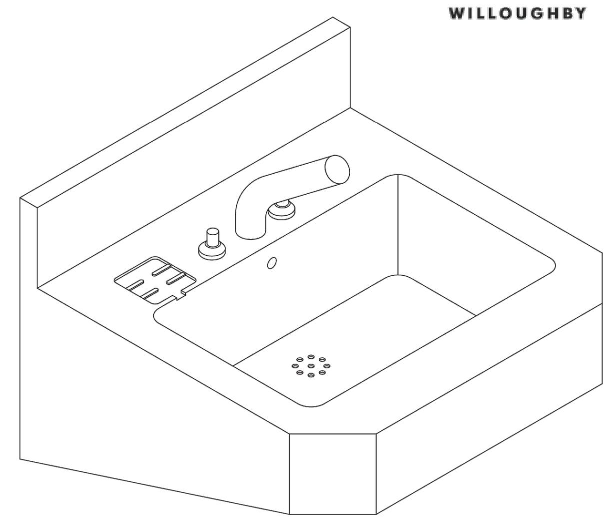

IN COMPLIANCE WITH A.D.A. 2010

(Unit may be shown with optional features)

To specify fixture and accessories, use the Model Number and Options page.

Example: To specify a Handicap Stainless Steel Commercial Lavatory with deck mounted spout, dual temp. pneumatic metering valves, standard pneumatic push buttons, standard lav. overflow vent, and chrome plated removable 'P' trap

Use the following Willoughby Model Number:
ES-1015-HC-DMS-PML2-PPB-OV-TT

Recommended Specifications

Handicap Stainless Steel Commercial Lavatory shall be:
Willoughby Model No. **ES-1015-HC**
(select from model number and options list on next page)

Fixture shall be fabricated from 16 gauge, Type 304 stainless steel. The construction is all-welded with exposed stainless surfaces polished to a #3 satin finish.

Standard lavatory shall include:
- Rectangular-shaped bowl, 14-1/2" x 9-1/2" x 4-3/8" deep
- Fast drain with overflow vent
- 4" long, Ø1-1/2" tailpiece
- Self-draining soap dish

Mounting:
Anchoring shall be from the front with Z-clip and anchoring holes provided. Anchoring hardware by others. Wall requires adequate backing to support lavatory. Unit requires no chase area for installation and maintenance.

ADA, TAS, and ANSI Compliant:
When the lavatory is mounted at the standard 34" adult rim height, it complies with applicable ADA, TAS, and ANSI Z124.3 and Z124.6 accessibility guidelines.

Note: Plug-in transformer must be used with a ground fault interrupter (GFCI) receptacle to prevent possible electrical shock.

Willoughby Industries - *Security Products*

UW-1317-HEU
Single Person
Rear Mounted
ADA-Compliant
Contoured
Washout Flush
High Efficiency Urinal

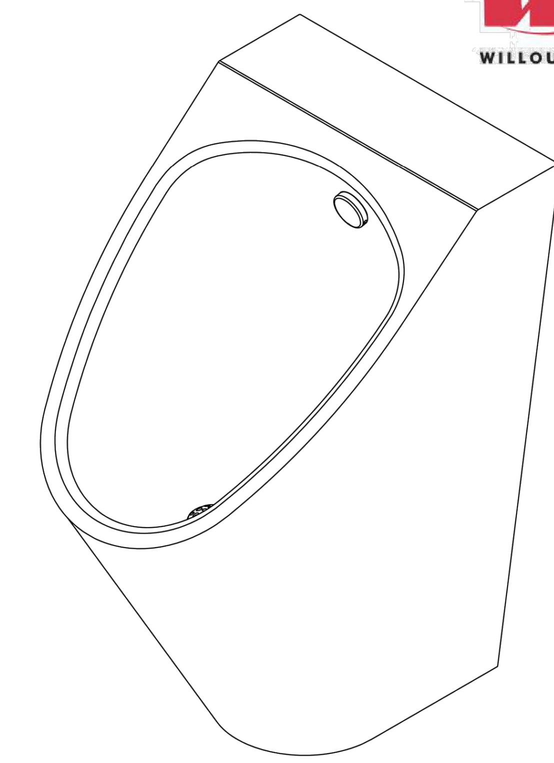

IN COMPLIANCE WITH A.D.A. 2010

(Unit may be shown with optional features)

To specify fixture and accessories, use the Model Number and Options page.

Example: To specify a Single Person, Rear Mounted, ADA-Compliant, Contoured, Washout Flush, High Efficiency Urinal with back spud, 1/8 GPF, wall sleeve, and hydraulic flush valve

Use the following Willoughby Model Number:
UW-1317-HEU-BS-0.125-WS-FV

Recommended Specifications

Single Person, Rear Mounted, ADA-Compliant, Contoured, Washout Flush, High Efficiency Urinal shall be:
Willoughby Model No. **UW-1317-HEU**
(Select from model number and options list on next page)

Fixture is fabricated from all 16 GA., Type 304 stainless steel. The construction shall be all-welded with exposed stainless steel surfaces polished to a satin finish. Contoured interior and exterior surfaces for ease of cleaning.

Standard equipment shall include:
- Machined stainless steel flush nozzle
- Beehive strainer
- Removable P-trap with 1-1/2" F.I.P. waste connection
- 3/4" N.P.T. male inlet connection

High Efficiency Urinal shall be washout type requiring 1/8 to 1/2 GPF flush valve and 25 PSI minimum flushing pressure. Trap shall be fully enclosed and maintain a 3" seal.

Anchoring shall be by a standard 4-point system: threaded rods, nuts and washers furnished for walls up to 8" thick.

Unit requires chase area for installation and maintenance.

Urinals mounted at 17" rim height to comply with ANSI, ADA and UFAS accessibility requirements. Please consult local code as compliance is subject to the interpretation and requirements of the local code authority.

COUNTY APPROVAL:
SIGNATURE ______________________ DATE____________

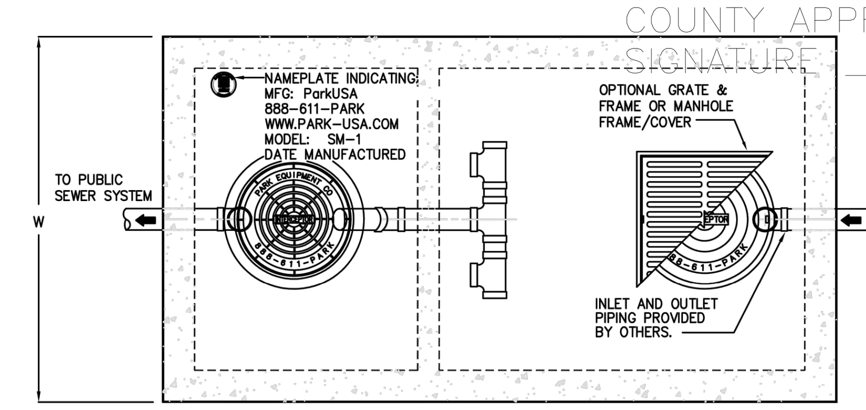

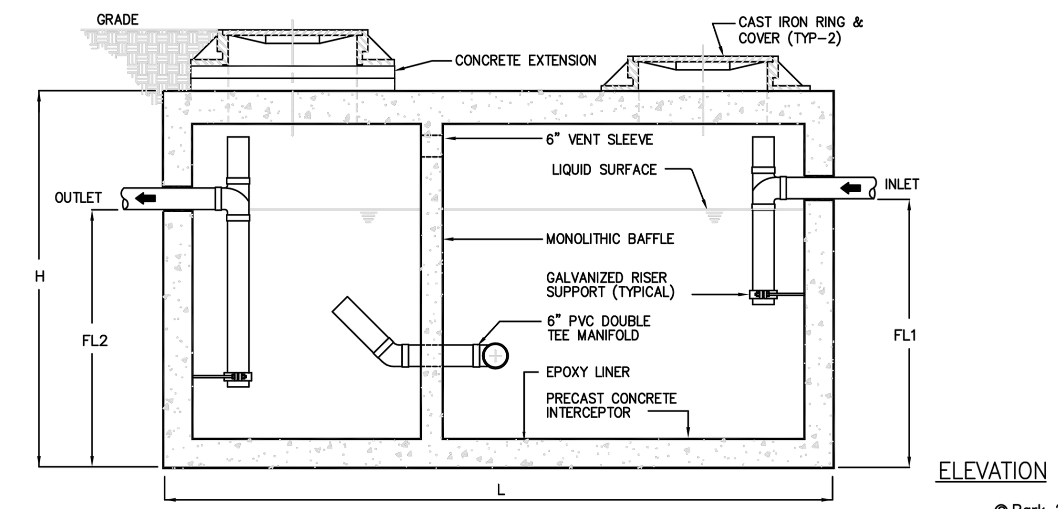

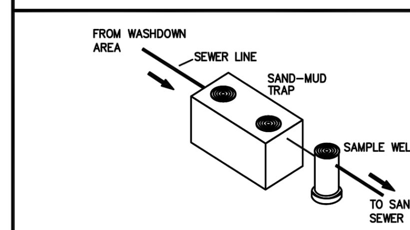

Typical applications include commercial and industrial laundry facilities where excessive sand & mud may interfere with the proper drainage of the sewer system. The sand-mud interceptor is generally buried below grade for gravity flow sewer systems. A sample well is utilized on the outlet side for sampling by the local water authoritiy.

Specifications

CONCRETE : Class II concrete with design strength of 4500 PSI at 28 days. Unit is of monolithic construction at floor, first stage of wall and baffle with sectional riser to required depth. (Monolithic baffle required, slide-in type is not acceptable)

REINFORCEMENT: Grade 60 reinforced with steel rebar conforming to ASTM A615 on required centers or equal.

C.I. CASTINGS: Manhole frames, covers or grates are manufactured of grey cast iron conforming to ASTM A48-76 Class 30. Manhole shall be nominal 24 inch diameter and be traffic duty.

SAND-MUD INTERCEPTOR SCHEDULE

MODEL NO.	CAPACITY USGal	EMPTY WT (LBS)	LENGTH L	WIDTH W	HEIGHT H	INLET FL1	OUTLET FL2
SM-500	500	9,500	7'-10"	4'-4"	4'-6"	3'-3"	3'-0"
SM-750	750	9,900	7'-10"	4'-4"	6'-0"	4'-5"	4'-2"
SM-1000	1,000	13,350	8'-8"	5'-0"	6'-0"	4'-9"	4'-6"
SM-1250	1,250	14,650	9'-2"	5'-8"	6'-0"	4'-9"	4'-6"
SM-1500	1,500	16,050	9'-2"	5'-8"	7'-0"	5'-9"	5'-6"
SM-2000	2,000	21,250	9'-0"	6'-0"	8'-0"	6'-9"	6'-6"
SM-2500	2,500	27,050	13'-0"	7'-0"	7'-0"	5'-9"	5'-6"
SM-3000	3,000	33,150	13'-0"	7'-0"	8'-0"	6'-9"	6'-6"
SM-3500	3,500	38,550	13'-0"	7'-0"	8'-6"	7'-3"	7'-0"
SM-4000	4,000	38,100	16'-0"	8'-6"	7'-0"	5'-9"	5'-6"

OTHER SIZES ARE AVAILABLE. CONTACT US FOR MORE INFORMATION

Engineering Data

The sand & mud interceptor is structurally & hydraulically engineered to conform to regional plumbing codes recommended in most cities. Consult with local authorities for specific application requirements.

Shop drawings shall include complete structural & bouyancy calculations certified by a licensed professional engineer.

Consult with Park Environmental for exact excavation dimensions & shipping information.

888.611.7275
www.park-usa.com
PARK USA Design for Water

SAND-MUD INTERCEPTOR MODEL SM - 500 THRU 4000 GALLONS		
SCALE NONE	DWG. NO. SM-1	REV. A
DATE 2012		

MODEL NUMBER AND OPTIONS:

1.) Lavatory Model:
❑ ES-1015-HC 18" Handicap Stainless Steel Commercial Lavatory

2.) Spout/Bubbler Selection:
❑ DMS Deck Mounted Spout
❑ DMBH Deck Mounted Hemispherical Bubbler

3.) Valve Selection:
❑ NV No Valve, No Spout / Bubbler- Faucet by Others (Select Hole Punching if needed)
❑ PSL1 Single Temp. Pneumatic Non-metering
❑ PSL2 Dual Temp. Pneumatic Non-metering
❑ PML1 Single Temp. Pneumatic Metering
❑ PML2 Dual Temp. Pneumatic Metering
❑ E1L1 Single Temp. Electronic (w/ Pneutronic Control)*
❑ E1L2 Dual Temp. Electronic (w/ Pneutronic Control)*

4.) Valve Actuation:
❑ PPB Pneumatic Push Buttons
❑ PBH Ligature-resistant Pneumatic Push Buttons
❑ EPB Electronic Push Buttons*
❑ EPBH Ligature-resistant Electronic Push Buttons*
❑ PZPB Piezo Electronic Push Buttons*

5.) Hole Punching Selection (Faucet by Others):
❑ 4CC 4" Centerset, Ø1" Holes (Specify 2 or 3 holes:___)
❑ 8CC 8" Centerset, Ø1" Holes (Specify 2 or 3 holes:___)
❑ 1CC Center Shank, (1) Ø1" Hole
❑ SP Special Punching (Specify hole punching dim.)
SP: ____________

6.) Lavatory Waste Options:
❑ TT Chrome Plated Removable 'P' Trap
❑ TE Trap Enclosure
❑ OV Overflow Vent (Standard)

7.) Other Options:
❑ TMV In-line Thermostatic Mixing Valve
❑ DC Decorator Color (Fixture exterior only - White)
❑ TF24H Hard-wired Transformer, 110VAC to 24VAC* (Standard)
❑ TF24P Plug-in Transformer, 110VAC to 24VAC*
❑ Other ____________
❑ Other ____________

8.) Electronic Controls* (Must Use Electronic Push Button):
❑ WUCC-3010 ❑ Pneutronic
(The WUCC-3010 Control can be used to pair a Lavatory with a Toilet)
*(Req. 110V power through ground fault interrupter (GFCI) receptacle)

Approved For Manufacturing By: ____________ Date: ________ Company: ____________
Wall Thickness: ____________ Wall Type: ____________

VERIFY ALL DIMENSIONS WITH FACTORY PRIOR TO ROUGH-IN
WILLOUGHBY RESERVES THE RIGHT TO MAKE CHANGES IN DESIGN AND DIMENSIONS WITHOUT FORMAL NOTICE AND WITHOUT INCURRING OBLIGATION.

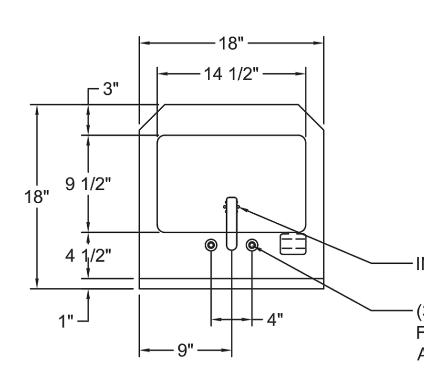

PLAN VIEW

IN COMPLIANCE WITH A.D.A. 2010

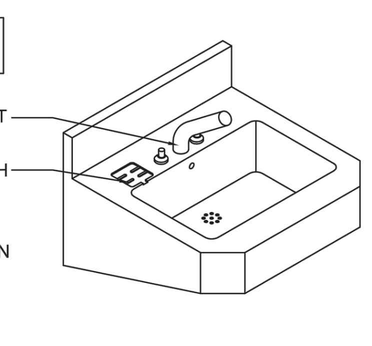

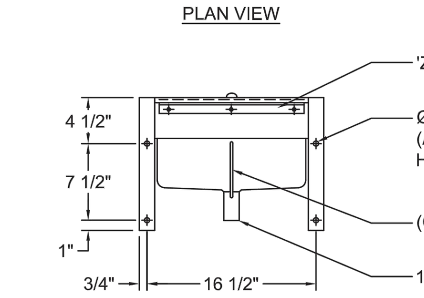

REAR VIEW

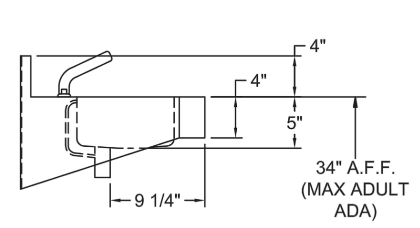

SIDE VIEW

MODEL NUMBER AND OPTIONS:

1.) Base Model Number:
❑ UW-1317-HEU Single Person, Rear Mounted, ADA-Compliant, Contoured, Washout Flush, High Efficiency Urinal

2.) Inlet Location:
❑ BS Back Spud
❑ TS Top Spud

3.) Flush Valve GPF (Must Specify):
❑ 0.5 GPF High Efficiency (HEU)
❑ 0.125 GPF High Efficiency (HEU)

4.) Options:
❑ MT Wall Template
❑ WS Wall Sleeve (Requires Accessible Chase)
❑ FV Hydraulic Flush Valve (Includes Actuator)
❑ EFV Electronic Flush Valve (Pick Control)*
❑ EFVP Electronic Flush Valve w/ (PZPB) Piezo Push Button (Pick Control)*
❑ ASUFVC Ligature-resistant Urinal Flush Valve Cover (Top Spud Only)
❑ AP Flush Valve Access Panel (Allows access to chase mounted flush valve from fixture side)
❑ TF24H Hard-wired Transformer, 110VAC to 24VAC*
❑ TF24P Plug-in Transformer, 110VAC to 24VAC*
❑ DC Decorator Color (Fixture exterior only - White)
❑ Other ____________
❑ Other ____________

5.) Electronic Controls* (Must Use Electronic Flush Valve):
❑ WUFC-4000 ❑ Pneutronic ❑ WMSII
*(Req. 110V power through ground fault interrupter (GFCI) receptacle)

Approved For Manufacturing By: ____________ Date: ________ Company: ____________
Wall Thickness: ____________ Wall Type: ____________

VERIFY ALL DIMENSIONS WITH FACTORY PRIOR TO ROUGH-IN
WILLOUGHBY RESERVES THE RIGHT TO MAKE CHANGES IN DESIGN AND DIMENSIONS WITHOUT FORMAL NOTICE AND WITHOUT INCURRING OBLIGATION.

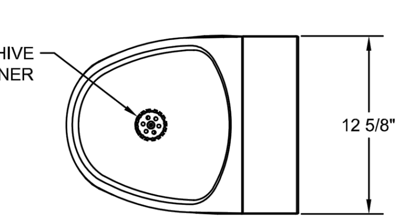

IN COMPLIANCE WITH A.D.A. 2010

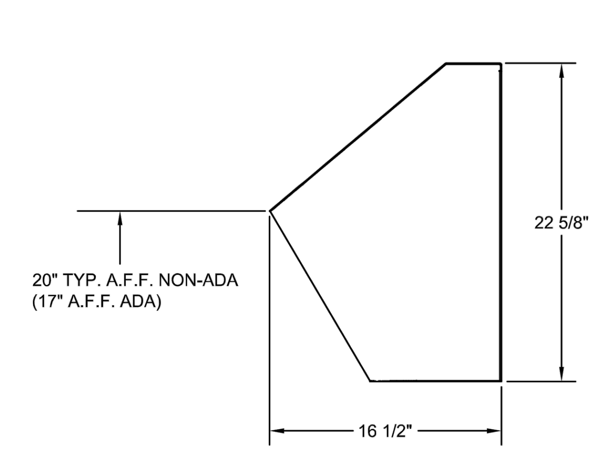

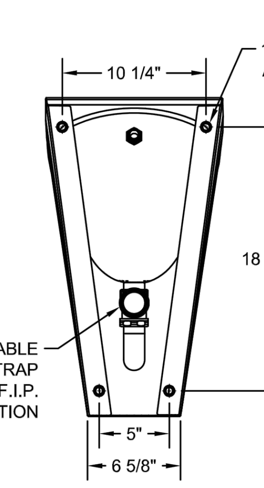

NORMAN S. HOFFMAN 95483 LICENSED PROFESSIONAL ENGINEER — STATE OF TEXAS

The seal appearing on this document was authorized by NORMAN HOFFMAN P.E. 95483 8/10/2018

GALVESTON COUNTY
BEACH PAVILION
CRYSTAL BEACH, TX 77650

BE-Arc LLC Project No : C-13-007.01

Ibis Engineering
REG # F-11156
P.O. Box 55171
Galveston, Texas 77555
PH 409.621.6740

THIS PRINT IS THE PROPERTY OF IBIS ENGINEERING IT MUST NOT BE TRACED OR REPRODUCED IN ANY MANNER NOR SHALL IT BE SUBMITTED WITHOUT PRIOR WRITTEN CONSENT FROM IBIS ENGINEERING.

easterwood ARCHITECTS STUDIO
409-354-8976
EASTERWOOD@BE-ARC.COM
2328 BALL STREET
GALVESTON TEXAS 77550

DATE	REVISION

BID SET

DATE ISSUED: 8/10/2018

COPYRIGHT 2018

P2.5

COUNTY APPROVAL:
SIGNATURE ____________________________ DATE_____________

PLUMBING LEGEND

SYMBOL	DESCRIPTION
SAN	SANITARY OR WASTE PIPING ABOVE GRADE (SAN)
SAN	SANITARY OR WASTE PIPING BELOW GRADE (SAN)
GW	GREASE WASTE PIPING ABOVE GRADE (GW)
GW	GREASE PIPING BELOW GRADE (GW)
	VENT PIPING ABOVE OR BELOW GRADE (V)
SD	STORM PIPING ABOVE GRADE (SD)
SD	STORM PIPING BELOW GRADE (SD)
OFD	OVERFLOW STORM PIPING ABOVE GRADE (OFD)
CW	COLD WATER PIPING (CW)
HW	HOT WATER PIPING (HW)
HWR	HOT WATER RETURN PIPING (HWR)
TW	TEMPERED WATER (TW)
TP	TRAP PRIMER LINE (TP)
FIRE	FIRE PROTECTION WATER PIPING (FIRE)
	FLOW DIRECTIONAL ARROW
	SHUT-OFF VALVE
	BALANCING VALVE (BV)
	SOLENOID VALVE (SV)
	BALL VALVE (BV)
	BUTTERFLY VALVE
	GAS PLUG VALVE (GPV)
	HORIZONTAL SWING CHECK
	UNION
	Y-STRAINER
	REDUCER OR INCREASER
	ECCENTRIC REDUCER
	REDUCED PRESSURE BACKFLOW PREVENTER (RPZ)
	PIPING DOWN
	RISE OR DROP PIPING
	PIPING UP -OR- PIPING UP & DOWN
	CAP ON END OF PIPE
	CLEANOUT (WALL OR CEILING) (CO)
	FLOOR CLEANOUT (FCO)
	EXTERIOR CLEANOUT WITH 18"x18"x4" CONCRETE PAD (ECO)
	TWO-WAY CLEANOUT (PROVIDE 18"x24"x4" CONCRETE PAD OUTSIDE)
	PRESSURE REDUCING VALVE (PRV)
	BRANCH CONNECTION OUT OF TOP
	BRANCH CONNECTION OUT OF BOTTOM
	BRANCH CONNECTION OUT OF SIDE
	WYE & 1/8TH BEND BRANCH CONNECTION
	WYE BRANCH CONNECTION
	HOSE BIBB
	PRESSURE GAUGE WITH COCK
	THERMOMETER
	GAS PRESSURE REGULATOR
	TEST COCK
	GAS METER
	WALL HYDRANT
	VALVE IN RISE
	ASME TEMPERATURE & PRESSURE RELIEF VALVE
	VACUUM RELIEF VALVE
	ANGLE VALVE
1	REFER TO KEYED NOTE
	FLOOR SINK (FS)
	FLOOR DRAIN (FD)
	FLOOR DRAIN WITH P-TRAP (FD)
	FLOOR DRAIN WITH P-TRAP AT 45° ANGLE (FD)
	HUB DRAIN (HD)
	ACCESS PANEL FOR TRAP PRIMER
AP	ACCESS PANEL LOCATION SYMBOL
	SHOCK ABSORBER WITH ACCESS PANEL
	AIR CHAMBER
	EXISTING
	NEW
	CONNECT NEW TO EXISTING
	INVERT ELEVATION
	QUARTER OF AN INCH SLOPE
	1/8TH OF AN INCH SLOPE
	1/16TH OF AN INCH SLOPE
	DELTA CHANGE SYMBOL
	RISER FLAG

NOTE: NOT ALL SYMBOLS MAY APPLY TO THIS PROJECT.

PLUMBING GENERAL NOTES

1. REFER TO CIVIL DRAWINGS FOR CONTINUATION OF DOMESTIC WATER, FIRE PROTECTION WATER, AND SANITARY WASTE UTILITIES.
2. REFER TO CIVIL DRAWINGS FOR SIZE AND LOCATION OF DOMESTIC WATER METER ON SITE.
3. REFER TO ARCHITECTURAL/CIVIL DRAWINGS FOR BUILDING FINISHED FLOOR ELEVATION.
4. FIELD VERIFY EXACT LOCATION, SIZE, DEPTH, DIRECTION OF FLOW, CAPACITY, PIPE MATERIAL AND CONDITION OF EXISTING SITE DOMESTIC WATER, FIRE PROTECTION WATER, AND SANITARY WASTE PIPING PRIOR TO BEGINNING CONSTRUCTION TO ENSURE THAT PROPER CONNECTIONS TO AND EXTENSION OF SUCH UTILITIES CAN BE MADE.
5. INVERT ELEVATIONS LISTED ARE APPROXIMATE. PRIOR TO CONSTRUCTION, COORDINATE FINAL INVERT ELEVATIONS OF BUILDING SANITARY OUTFALLS AND SITE PIPING WITH SITE UTILITY CONTRACTOR. MAKE ADJUSTMENTS AS REQUIRED TO ENSURE PROPER CONNECTIONS TO SITE UTILITIES.
6. PRIOR TO BEGINNING CONSTRUCTION, COORDINATE PLUMBING BACKFLOW PREVENTION REQUIREMENTS WITH THE LOCAL CODE AUTHORITY AND PROVIDE AS DIRECTED.
7. CONTRACTOR SHALL COORDINATE ROUTING OF PIPING BELOW SLAB WITH COLUMN FOOTINGS, GRADE BEAMS, UNDERGROUND PLUMBING AND ELECTRICAL UTILITIES, AND OTHER SUB-SURFACE BUILDING ELEMENTS.
8. CONTRACTOR SHALL COORDINATE ROUTING OF PIPING IN CEILING SPACES WITH MECHANICAL AND ELECTRICAL EQUIPMENT, DUCTWORK AND CONDUIT. SHOULD A CONFLICT OCCUR THE CONTRACTOR SHALL NOTIFY THE ARCHITECT/ENGINEER PRIOR TO INSTALLING AN ALTERNATE PIPING PLAN.
9. MAINTAIN MINIMUM 15'-0" DISTANCE BETWEEN VENT TERMINALS THROUGH ROOF AND ALL FRESH AIR INTAKES.
10. COORDINATE ALL FIXTURE AND EQUIPMENT LOCATIONS AND CONNECTION REQUIREMENTS WITH LATEST ARCHITECTURAL DRAWINGS, SPECIFICATIONS, AND MANUFACTURER RECOMMENDATIONS PRIOR TO ANY ROUGH-INS.
11. DO NOT ROUGH-IN FROM THESE DRAWINGS. REFER TO LATEST ARCHITECTURAL DRAWINGS FOR DIMENSIONED LOCATIONS.
12. CONTRACTOR TO COORDINATE ALL WORK WITH THE WORK OF OTHER TRADES TO AVOID CONFLICTS AND TO MINIMIZE INTERRUPTION OF SERVICES.
13. ALL WORK, METHODS AND INSTALLATIONS INVOLVED IN THE PLUMBING DESIGN SHALL BE IN ACCORDANCE WITH THE CITY BUILDING CODE AND INSPECTION REGULATIONS AND ALL OTHER OFFICIALS HAVING JURISDICTION.
14. UPON COMPLETION OF WORK, THOROUGHLY ROD OUT AND FLUSH ALL SANITARY PIPING TO ENSURE IT IS FREE FROM BLOCKAGES.

GENERAL CONDITIONS

1. ALL WORK SHALL BE INSTALLED IN ACCORDANCE WITH THE GOVERNING LOCAL, STATE, AND NATIONAL CODE AS THE MINIMUM REQUIREMENT WHETHER OR NOT SPECIFIED OF SHOWN ON DRAWINGS. DRAWINGS SHALL GOVERN WHERE A LARGER SIZE, QUANTITY, OR BETTER QUALITY IS SHOWN THAN IS REQUIRED BY CODE(S). AS USED IN THE FOLLOWING, "CONTRACTOR" SHALL MEAN THE CONTRACTOR INSTALLING WORK UNDER THIS DIVISION OF THE WORK.
2. DRAWINGS ARE DIAGRAMMATIC IN NATURE AND DO NOT SHOW EVERY REQUIRED MISCELLANEOUS DETAILS, SUPPORT, FITTINGS, ETC. FURNISH AND INSTALL ALL MATERIALS REQUIRED FOR A COMPLETE FUNCTIONING SYSTEM WHETHER OR NOT SHOWN ON THE DRAWINGS.
3. COORDINATE INSTALLATION WITH OTHER TRADES TO ASSURE INSTALLATION OF MATERIALS AND EQUIPMENT AS REQUIRED FOR THE PROPER SEQUENCE OF CONSTRUCTION. VERIFY AND INSTALL WITHIN INTENDED SPACE REQUIREMENTSWITH PROVISIONS FOR ACCESS FOR SERVICE AND REMOVAL.
4. CONTRACTOR SHALL INSPECT THE SITE AND BE INFORMED OF THE CONDITIONS AFFECTING THE WORK, NO ADDITIONAL ALLOWANCE WILL BE MADE BECAUSE OF FAILURE TO OBTAIN INFORMATION ON SITE CONDITIONS, COORDINATE THE WORK AS REQUIRED AND DIRECTED BY LOCAL UTILITY COMPANIES STANDARDS.
5. ALL WORK SHALL BE INSTALLED IN THE FIRST CLASS MANNER CONSISTENT WITH INDUSTRY STANDARDS. MATERIALS OR EQUIPMENT WHICH DO NOT PRESENT A READONABLY NEAT OR WORKMANLIKE APPEARANCE MAY BE DIRECTED BY THE ARCHITECT TO BE REMOVED AND REPLACED AT NO ADDITIONAL COST.
6. FURNISH 6 COPIES OR BROCHURES/SHOP DRAWINGS FOR APPROVAL PRIOR TO STARTING WORK. AT PROJECT CLOSEOUT, PROVIDE THREE COPIES OPERATING MANUALS, THREE COPIES OF "AS-BUILT" RECORD DRAWINGS, AND INSTRUCT OWNER IN THE OPERATION OF ALL EQUIPMENT.
7. ALL MISCELLANEOUS WORK SUCH AS EXCAVATION BACKFILL, CONCRETE, PADS, SLEEVES, ETC. REQUIRED TO PERFORM WORK UNDER THE DIVISION SHALL BE FURNISHED AND INSTALLED BY THE CONTRACTOR OR THIS DIVISION OF WORK. OBTAIN AND PAY FOR ALL REQUIRED LICENSES, PERMITS, AND CERTIFICATES REQUIRED FOR WORK UNDER THIS SECTION.
8. ALL WORK SHALL BE GUARENTEED AGAINST DEFECTS IN MATERIALS AND WORKMANSHIP FOR A PERIOD OF (1) YEAR BEYOND FINAL ACCEPTANCE IN A FORM ACCEPTABLE TO THE ARCHITECT. GUARANTEE SHALL INCLUDE CORRECTIONS OR REPLACEMENT OF DAMAGE OR REPLACEMENT TO OTHER'S WORK OR MATERIALS CAUSED BY WORK UNDER THIS DIVISION.

REQUIREMENTS

1. PLUMBING CONTRACTOR SHALL FURNISH AND INSTALL ALL HOT AND COLD WATER PIPING SYSTEMS, DRAINAGE, WASTE, AND VENT PIPING SYSTEMS, FIXTURES AND HARDWARE, AND WATER HEATERS INSTALLED DIELECTRIC UNIONS AT ALL DISSINILIR METAL CONNECTIONS.
2. PROVIDE 1 SET OF AIR CHAMBERS AT ALL WATER CLOSET TANKS, BACK FLOW PREVENTORS SHALL BE PROVIDED WHERE SHOWN ON THE DRAWINGS AND AS REQUIRED BY CODE.
3. CUTOFF VALVES, STOPS, SHALL BE PROVIDED WHERE SHOWN ON DRAWINGS AND AT ALL FIXTURE CONNECTIONS. CLEAN OUTS SHALL BE PROVIDED AS REQUIRED BY CODE AND AS SHOWN ON THE DRAWINGS.
4. CONDENSATE DRAIN LINES SHALL BE MINIMUM 3/4", WITH TRAP, INSULATE 1ST 10'-0" OF CONDENSATE DRAIN WITH 1/2" INSULATION.
5. TEST ALL WATER SYSTEMS IN PRESENCE OF OWNER'S REPRESENTATIVE AT MINIMUM 100 PSIG FOR 8 HOURS. SANITARY, WASTE AND VENTS SHALL BE TESTED WITH 10'-0" HEAD OF WATER FOR 8 HOURS WITH LEVEL OF WATER TO REMAIN UNCHANGED.
6. INSTALL ALL PIPING SYSTEMS SO THAT THEY WILL NOT BE SUBJECT TO ANY UNDUE STRAINS OR STRESSES AND PROVISIONS SHALL BE MADE FOR THE EXPANSION, AND CONTRACTION, AND STRUCTURAL SETTLEMENT. INSTALL A MINIMUM 6" SAND FILL AROUND ALL UNDERGROUND PIPES.
7. SANITIZE/FLUSH DOMESTIC WATER SYSTEM PER STATE STANDARDS. CHECK WATER PRESSURE AVAILABLE AT SITE AND INSTALL PRESSURE REDUCER IF REQUIRED TO LIMIT 80PSI AT BUILDING ENTRANCE.
8. ALL WATER PIPING AND TRAPS IN EXTERIOR WALLS AND IN PLENUM SPACE SHALL BE INSULATED WITH MIN. 1" ARMFLEX VAPOR SHIELD INSULATION.
9. CONFIRM ALL TRAPS ARE FULL OF WATER AFTER INSTALLATION.
10. ALL PENETRATIONS THROUGH FIRE RATED WALLS AND FLOOR CEILING ASSEMBLIES SHALL BE INSTALLED AND SEALED TO MAINTAIN FIRE RATING WITH U.L. LISTED ASSEMBLIES, MATERIALS, AND SEALANTS. VERIFY ACTUAL REQUIREMENTS WITH LOCAL BUILDING OFFICIALS.
11. UNIONS SHALL BE INSTALLED IN THE WATER SUPPLY PIPING WITHIN 12" OF REGULATING EQUIPMENT, WATER HEATER, CONDITIONING AND SIMILIAR EQUIPMENT WHICH MAY REQUIRE SERVICE BY REMOVAL OR REPLACEMENT IN A MANNER WHICH WILL FACILITATE ITS READY REMOVAL.
12. USE PROSET FIRESTOP WASHER/REFRIGERATOR BOX DESIGN PS/PV 120-08 IN RATED WALLS.
13. WATER PIPING INSDE THE BUILDING SHALL BE SEAMLESS ASTM B 88 TYPE L COPPER WATER TUBE WROUGHT COPPER FITTINGS, ANSI B16.22. SOLDER MATERIAL SHALL BE 95.5% LEAD FREE, ASTM B 32. THE USE OF DRILLED-T CONNECTIONS IS NOT PERMITTED.

    WATER PIPING BELOW SLAB SHALL BE ASTM B 88 TYPE K COPPER WATER TUBE WITH WROUGHT COPPER FITTINGS, ANSI B16.22. ALL JOINTS SHALL BE BRAZED.
14. DRAIN, WASTE, PIPING, AND FITTINGS SHALL BE SCHEDULE 40 POLYVINYL CHLORIDE CONFORMING TO ASTM D-2665 WITH SOLVENT WELDED JOINTS.
15. VENT PIPING SHALL BE CAST IRON. DRAIN PIPING IN PLENUM SHALL BE CAST IRON OR COPPER.

THERMOSTATIC MIXING VALVES

ITEM NO.	INLET HOT WATER TEMP (°F)	OUTLET MIXED TEMP (°F)	MINIMUM FLOW (GPM)	DESIGN FLOW (GPM)	PRESSURE DROP @ DESIGN FLOW (PSI)	VALVE FINISH	MANUFACTURER / MODEL NO.
TMV-1	140°	110°	0.5	4	5.0	ROUGH BRONZE	SYMMONS THERMIXER 7-120-CKX
TMV-2	140°	110°	-	7	5.0	ROUGH BRONZE	SPEAKMAN SE-370

NOTES:
1. MAKE WATER CONNECTIONS TO THERMOSTATIC MIXING VALVE(S) IN ACCORDANCE WITH THE MANUFACTURER'S RECOMMENDATIONS.
2. PROVIDE PIPE INCREASERS AND/OR VALVES AS REQUIRED.

WATER HAMMER DAMPERS

SYMBOL / SIZE	FIXTURE UNITS	CHAMBER LENGTH	SWEAT CONNECTION
A	1-11	8-1/4"	1/2"

NOTES
1. SOUIX CHIEF HYDRA-RESTER 650 SERIES WATER HAMMER ARRESTER

FIXTURE VENTS

2009 IPC, TABLE 906.1
DISTANCE OF FIXTURE TRAP FROM VENT

MAXIMUM FIXTURE UNITS ALLOWED PER SLOPE

SIZE OF FIXTURE DRAIN (IN.)	SIZE OF TRAP (IN.)	SLOPE (IN/FT)	DISTANCE FROM TRAP (FT)
1 1/4"	1 1/4"	1/4	5'
1 1/2"	1 1/4"	1/4	5'
1 1/2"	1 1/2"	1/4	6'
2"	1 1/2"	1/4	6'
2"	2"	1/4	8'
3"	3"	1/8	12'
4"	4"	1/8	16'

FIXTURE WATER SUPPLY PIPES

2009 IPC, TABLE 604.5

MINIMUM SIZES OF FIXTURE WATER SUPPLY PIPES

FIXTURE	MINIMUM PIPE SIZE (IN.)
BATHTUBS	1/2"
KITCHEN SINK	1/2"
LAUNDRY	1/2"
LAVATORY	1/2"
SHOWER	1/2"
WATER CLOSET, FLUSH TANK	1/2"

SANITARY SEWER

2009 IPC, TABLE 710.1(1)
BUILDING DRAINS AND SEWERS

MAXIMUM FIXTURE UNITS ALLOWED PER SLOPE (INCLD BRANCHES)

PIPE DIA.	1/8" PER FT	1/4" PER FT	1/2" PER FT
3"	36	42	50
4"	180	216	250
5"	390	450	575
6"	700	840	1000

MIN. SIZE OF AN BLDG DRAIN SERVING A WATER CLOSET IS 3"

NOTE:
ALL BUILDING ARE (3) STORY UNLESS NOTED OTHERWISE. ALL LINE SIZES ARE BASED ON 1/4" PER FT. SLOPE (UNC). PROVIDE CLEANOUTS PER IPC 708.3.1: 1 PER 100' (ONE PER HUNDRED FEET)

SANITARY SEWER

2009 IPC, TABLE 710.1(2)
HORIZONTAL FIXTURES BRANCHES AND STACKS

MAXIMUM FIXTURE UNITS

PIPE DIA.	TOTAL FOR HOR BRANCH	STACK BRANCH INTERVAL	3 STORY STACK	4 STORY STACK
3"	20	20	48	72
4"	160	90	240	500
5"	360	200	540	1100
6"	620	350	960	1900

MIN. SIZE SERVING WC=3"

WATER CONSERVATION

2009 IPC, TABLE 604.4

MAXIMUM WATER USAGE PER FIXTURE

PRIVATE WATER CLOSETS	1.6 GAL/FLUSH
LAVATORY	2.2 GPM AT 60 PSI
PRIVATE SINK/FAUCETS	2.2 GPM AT 60 PSI
SHOWERHEADS	2.5 GPM AT 80 PSI

NOTE:
VERIFY WATER PRESSURE AT BUILDING ENTRANCE AND INSTALL PRESSURE REDUCING VALVE TO LIMIT 80 PSI PER IPC 604.8 WATER PIPING SIZING BASED ON PROVIDING A MINIMUM OF 15 PSI AT THE MOST REMOTE OUTLET.

STATE OF TEXAS
NORMAN S. HOFFMAN
95483
LICENSED PROFESSIONAL ENGINEER

The seal appearing on this document was authorized by NORMAN HOFFMAN P.E. 95483 8/10/2018

GALVESTON COUNTY
BEACH PAVILION
CRYSTAL BEACH, TX 77650

BE-Arc LLC Project No : C-13-007.01

ibis Engineering
REG # F-11156
P.O. Box 55171
Galveston, Texas 77555
PH 409.621.6740

THIS PRINT IS THE PROPERTY OF IBIS ENGINEERING IT MUST NOT BE TRACED OR REPRODUCED IN ANY MANNER NOR SHALL IT BE SUBMITTED WITHOUT PRIOR WRITTEN CONSENT FROM IBIS ENGINEERING.

easterwood
ARCHITECTS STUDIO
409-354-8976
EASTERWOOD@BE-ARC.COM
2328 BALL STREET
GALVESTON TEXAS 77550

DATE	REVISION

BID SET

DATE ISSUED:
8/10/2018

COPYRIGHT 2018

P3.0

COUNTY APPROVAL:
SIGNATURE ____________________ DATE ____________

PLUMBING SPECIFICATIONS

DOMESTIC WATER PIPING– COPPER TUBE AND FITTINGS

A. HARD COPPER TUBE: ASTM B 88, TYPE L (ASTM B 88M, TYPE B) WATER TUBE, DRAWN TEMPER.
1. CAST-COPPER SOLDER-JOINT FITTINGS: ASME B16.18, PRESSURE FITTINGS.
2. WROUGHT-COPPER SOLDER-JOINT FITTINGS: ASME B16.22, WROUGHT-COPPER PRESSURE FITTINGS.
3. BRONZE FLANGES: ASME B16.24, CLASS 150, WITH SOLDER-JOINT ENDS.
4. COPPER UNIONS: MSS SP-123, CAST-COPPER-ALLOY, HEXAGONAL -STOCK BODY, WITH BALL -AND-SOCKET, METAL-TO-METAL SEATING SURFACES. AND SOLDER-JOINT OR THREADED ENDS.

B. SOFT COPPER TUBE: ASTM B 88, TYPE K (ASTM B 88M, TYPE A) AND ASTM B 88, TYPE L (ASTM B 88M, TYPE B) WATER TUBE, ANNEALED TEMPER. COPPER SOLDER-JOINT FITTINGS: ASME B16.22, WROUGHT-COPPER PRESSURE FITTINGS. COPPER PRESSURE-SEAL-JOINT FITTINGS:
MANUFACTURERS: SUBJECT TO COMPLIANCE WITH REQUIREMENTS, PROVIDE PRODUCTS BY ONE OF THE FOLLOWING:
1. NIBCO INC.
2. VIEGA; PLUMBING AND HEATING SYSTEMS.

NPS 2 (DN 50) AND SMALLER: WROUGHT-COPPER FITTING WITH EPDM-RUBBER O-RING SEAL IN EACH END.
NPS 3 AND NPS 4 (DN 80 AND DN 100): CAST-BRONZE OR WROUGHT-COPPER FITTING WITH EPDM-RUBBER O-RING SEALS IN EACH END.

C. DIELECTRIC FITTINGS
GENERAL REQUIREMENTS' ASSEMBLY OF COPPER ALLOY AND FERROUS MATERIALS WITH SEPARATING NONCONDUCTIVE INSULATING MATERIAL. INCLUDE END CONNECTIONS COMPATIBLE WITH PIPES TO BE JOINED.

D. DRAWING PLANS, SCHEMATICS, AND DIAGRAMS INDICATE GENERAL LOCATION AND ARRANGEMENT OF DOMESTIC WATER PIPING. INDICATED LOCATIONS AND ARRANGEMENTS ARE USED TO SIZE PIPE AND CALCULATE FRICTION LOSS, EXPANSION, AND OTHER DESIGN CONSIDERATIONS. INSTALL PIPING AS INDICATED UNLESS DEVIATIONS TO LAYOUT ARE APPROVED ON COORDINATION DRAWINGS.

E. INSTALL COPPER TUBING UNDER BUILDING SLAB ACCORDING TO CDA'S "COPPER TUBE HANDBOOK."

F. INSTALL SHUTOFF VALVE IMMEDIATELY UPSTREAM OF EACH DIELECTRIC FITTING.

G. INSTALL DOMESTIC WATER PIPING LEVEL V!TH 0.125 PERCENT SLOPE DOWNWARD TOWARD DRAIN AND PLUMB.

H. INSTALL PIPING CONCEALED FROM VIEW AND PROTECTED FROM PHYSICAL CONTACT BY BUILDING OCCUPANTS UNLESS OTHERI'!SE INDICATED AND EXCEPT IN EQUIPMENT ROOMS AND SERVICE AREAS.

I. INSTALL PIPING INDICATED TO BE EXPOSED AND PIPING IN EQUIPMENT ROOMS AND SERVICE AREAS AT RIGHT ANGLES OR PARALLEL TO BUILDING WALLS. DIAGONAL RUNS ARE PROHIBITED UNLESS SPECIFICALLY INDICATED OTHERWISE.

J. INSTALL PIPING ABOVE ACCESSIBLE CEILINGS TO ALLOW SUFFICIENT SPACE FOR CEILING PANEL REMOVAL, AND COORDINATE WITH OTHER SERVICES OCCUPYING THAT SPACE.

K. INSTALL PIPING ADJACENT TO EQUIPMENT AND SPECIAL TIES TO ALLOW SERVICE AND MAINTENANCE.

L. INSTALL PIPING TO PERMIT VALVE SERVICING.

M. INSTALL NIPPLES, UNIONS, SPECIAL FITTINGS, AND VALVES WITH PRESSURE RATINGS THE SAME AS OR HIGHER THAN SYSTEM PRESSURE RATING USED IN APPLICATIONS BELOW UNLESS OTHERWISE INDICATED.

N. INSTALL PIPING FREE OF SAGS AND BENDS.

O. INSTALL FITTINGS FOR CHANGES IN DIRECTION AND BRANCH CONNECTIONS.

P. INSTALL UNIONS IN COPPER TUBING AT FINAL CONNECTION TO EACH PIECE OF EQUIPMENT, MACHINE, AND SPECIALTY.

Q. INSTALL SLEEVES FOR PIPING PENETRATIONS OF WALLS, CEILINGS, AND FLOORS.

R. INSTALL ESCUTCHEONS FOR PIPING PENETRATIONS OF WALLS, CEILINGS, AND FLOORS.

S. INSTALL SHUTOFF VALVE CLOSE TO WATER MAIN ON EACH BRANCH AND RISER SERVING PLUMBING FIXTURES OR EQUIPMENT, ON EACH WATER SUPPLY TO EQUIPMENT, AND ON EACH WATER SUPPLY TO PLUMBING FIXTURES THAT DO NOT HAVE SUPPLY STOPS. USE BALL VALV£S FOR PIPING NPS 2 (DN 50) AND SMALLER. USE GATE VALVES FOR PIPING NPS 2-1/2 (DN 65) AND LARGER.

T. HANGER AND SUPPORT INSTALLATION: SUPPORT VERTICAL PIPING AND TUBING AT BASE AND AT EACH FLOOR.

U. ROD DIAMETER MAY BE REDUCED ONE SIZE FOR DOUBLE-ROD HANGERS, TO A MINIMUM OF 3/8 INCH (10 MM).

V. INSTALL HANGERS FOR COPPER TUBING WITH THE FOLLOWING MAXIMUM HORIZONTAL SPACING AND MINIMUM ROD DIAMETERS:
1. NPS 3/4 (DN 20) AND SMALLER: 60 INCHES (1500 MM) WITH 3/8-INCH (10-MM) ROD.
2. NPS 1 AND NPS 1-1/4 (DN 25 AND DN 32): 72 INCHES (1BDD MM) WITH 3/8-INCH (10-MM) ROD.
3. NPS 1-1/2 AND NPS 2 (DN 4D AND DN 50): 96 INCHES (2400 MM) WITH 3/8-INCH (10-MM) ROD.
4. NPS 2-1/2 (DN 65): 108 INCHES (2700 MM) WITH 1/2-INCH (13-MM) ROD.
5. NPS 3 TO NPS 5 (DN 80 TO DN 125): 10 FEET (3 M) WITH 1/2-INCH (13-MM) ROD.
6. NPS 6 (DN 150): 10 FEET (3 M) WITH 5/8-INCH (16-MM) ROD.
7. NPS 8 (DN 200): 10 FEET (3 M) WITH 3/4-INCH (19-MM) ROD.

W. INSTALL SUPPORTS FOR VERTICAL COPPER TUBING EVERY 10 FEET (3 M).

X. FIELD QUALITY CONTROL PERFORM TESTS AND INSPECTIONS. PIPING INSPECTIONS:
1. DO NOT ENCLOSE, COVER, OR PUT PIPING INTO OPERATION UNTIL IT HAS BEEN INSPECTED AND APPROVED BY AUTHORITIES HAVING JURISDICTION.
2. DURING INSTALLATION, NOTIFY AUTHORITIES HAVING JURISDICTION AT LEAST ONE DAY BEFORE INSPECTION MUST BE MADE. PERFORM TESTS SPECIFIED BELOW IN PRESENCE OF AUTHORITIES HAVING JURISDICTION:
3. ROUGHING-IN INSPECTION' ARRANGE FOR INSPECTION OF PIPING BEFORE CONCEALING OR CLOSING-IN AFTER ROUGHING-IN AND BEFORE SETTING FIXTURES.
4. FINAL INSPECTION: ARRANGE FINAL INSPECTION FOR AUTHORITIES HAVING JURISDICTION TO OBSERVE TESTS SPECIFIED BELOW AND TO ENSURE COMPLIANCE WITH REQUIREMENTS.
5. REINSPECTION: IF AUTHORITIES HAVING JURISDICTION FIND THAT PIPING IMLL NOT PASS TESTS OR INSPECTIONS, MAKE REQUIRED CORRECTIONS AND ARRANGE FOR REINSPECTION.
6. REPORTS: PREPARE INSPECTION REPORTS AND HAVE THEM SIGNED BY AUTHORITIES HAVING JURISDICTION.

Y. PIPING TESTS:
1. FILL DOMESTIC WATER PIPING. CHECK COMPONENTS TO DETERMINE THAT THEY ARE NOT AIR BOUND AND THAT PIPING IS FULL OF WATER.
2. TEST FOR LEAKS AND DEFECTS IN NEW PIPING AND PARTS OF EXISTING PIPING THAT HAVE BEEN ALTERED, EXTENDED, OR REPAIRED. IF TESTING IS PERFORMED IN SEGMENTS, SUBMIT A SEPARATE REPORT FOR EACH TEST, COMPLETE WITH DIAGRAM OF PORTION OF PIPING TESTED.
3. LEAVE NEW, ALTERED, EXTENDED, OR REPLACED DOMESTIC WATER PIPING UNCOVERED AND UNCONCEALED UNTIL IT HAS BEEN TESTED AND APPROVED. EXPOSE WORK THAT WAS COVERED DR CONCEALED BEFORE IT WAS TESTED.
4. CAP AND SUBJECT PIPING TO STATIC WATER PRESSURE OF 50 PSIG (345 KPA) ABOVE OPERATING PRESSURE, WITHOUT EXCEEDING PRESSURE RATING OF PIPING SYSTEM MATERIALS. ISOLATE TEST SOURCE AND ALLOW TO STAND FOR FOUR HOURS. LEAKS AND LOSS IN TEST PRESSURE CONSTITUTE DEFECTS THAT MUST BE REPAIRED.
5. REPAIR LEAKS AND DEFECTS WITH NEW MATERIALS AND RETEST PIPING OR PORTION THEREOF UNTIL SATISFACTORY RESULTS ARE OBTAINED.
6. PREPARE REPORTS FOR TESTS AND FOR CORRECTIVE ACTION REQUIRED.

Z. DOMESTIC WATER PIPING WILL BE CONSIDERED DEFECTIVE IF IT DOES NOT PASS TESTS AND INSPECTIONS.

AA. PREPARE TEST AND INSPECTION REPORTS.

AB. CLEAN AND DISINFECT POTABLE AND NON-POTABLE DOMESTIC WATER PIPING AS FOLLOWS:

AC. PURGE NEW PIPING AND PARTS OF EXISTING PIPING n-IAT HAVE BEEN ALTERED, EXTENDED, OR REPAIRED BEFORE USING.

AD. USE PURGING AND DISINFECTING PROCEDURES PRESCRIBED BY AUTHORITIES HAVING JURISDICTION; IF METHODS ARE NOT PRESCRIBED, USE PROCEDURES DESCRIBED IN EITHER AWWA C651 OR AWWA C652 DR FOLLOW PROCEDURES DESCRIBED BELOW:
1. FLUSH PIPING SYSTEM WITH CLEAN, POTABLE WATER UNTIL DIRTY WATER DOES NOT APPEAR AT OUTLETS.
2. FLUSH SYSTEM WITH CLEAN, POTABLE WATER UNTIL NO CHLORINE IS IN WATER COMING FROM SYSTEM AFTER THE STANDING TIME.
3. SUBMIT WATER SAMPLES IN STERILE BOTTLES TO AUTHORITIES HAVING JURISDICTION. REPEAT PROCEDURES IF BIOLOGICAL EXAMINATION SHOWS CONTAMINATION.

AE. UNDER-BUILDING-SLAB, DOMESTIC WATER PIPING, NPS 2 (DN 50) AND SMALLER, SHALL BE THE FOLLOWING:
1. SOFT COPPER TUBE, ASTM B 88, TYPE L (ASTM B 88M, TYPE B); WROUGHT-COPPER SOLDER-JOINT FITTINGS; AND BRAZED JOINTS.

AF. ABOVEGROUND DOMESTIC WATER PIPING, NPS 2 (DN 50) AND SMALLER, SHALL BE THE FOLLOWING:
1. HARD COPPER TUBE, ASTM B 88, TYPE L (ASTM B 88M, TIPE B); WROUGHT-COPPER SOLDER-JOINT FITTINGS; AND SOLDERED JOINTS.

AG. ABOVEGROUND DOMESTIC WATER PIPING, NPS 2-1/2 TO NPS 4 (DN 65 TO DN 100), SHALL BE OF THE FOLLOWING:
1. HARD COPPER TUBE, ASTM B 88, TYPE L (ASTM B 88M, TIPE B); CAST-COPPER SOLDER-JOINT FITTINGS; AND SOLDERED JOINTS.
2. GALVANIZED-STEEL PIPE; GROOVED-JOINT, GALVANIZED-STEEL-PIPE APPURTENANCES; AND GROOVED JOINTS.

AH. DRAWINGS INDICATE VALVE TYPES TO BE USED. WHERE SPECIFIC VALVE TYPES ARE NOT INDICATED, THE FOLLOWING REQUIREMENTS APPLY:
1. SHUTOFF DUTY: USE BALL VALV£S FOR PIPING NPS 2 (DN 50) AND SMALLER. USE GATE VALVES WITH FLANGED ENDS FOR PIPING NPS 2-1/2 (DN 65) AND LARGER.
2. THROTTLING DUTY: USE BALL VALVES FOR PIPING NPS 2 (DN 50) AND SMALLER. USE BALL VALVES WITH FLANGED ENDS FOR PIPING NPS 2-1/2 (DN 65) AND LARGER.
3. HOT-WATER CIRCULATION PIPING, BALANCING DUTY: CALIBRATED BALANCING VALVES.
4. DRAIN DUTY: HOSE-END DRAIN VALVES.

AI. USE CHECK VALVES TO MAINTAIN CORRECT DIRECTION OF DOMESTIC WATER FLOW TO AND FROM EQUIPMENT.

AJ. IRON GROOVED-END VALVES MAY BE USED WITH GROOVED-END PIPING.

SANITARY WASTE

A. HUB-AND-SPIGOT, CAST-IRON SOIL PIPE AND FITTINGS PIPE AND FITTINGS' ASTM A 74, SERVICE CLASS(ES). GASKETS: ASTM C 564, RUBBER.

B. HUBLESS, CAST-IRON SOIL PIPE AND FITTINGS PIPE AND FITTINGS: ASTM A 888 OR CISPI 301. SOVENT STACK FITTINGS: ASME B16.45 OR ASSE 1043, HUBLESS, CAST-IRON AERATOR AND DEAERATOR DRAINAGE FITTINGS. CISPI, HUBLESS-PIPING COUPLINGS:
MANUFACTURERS: SUBJECT TO COMPLIANCE WITH REQUIREMENTS, PROVIDE PRODUCTS BY ONE OF THE FOLLOWING:
1. ANACO-HUSKY, SD-4000.
2. MIFAB, INC.
3. MISSION RUBBER COMPANY; A DIVISION OF MCP INDUSTRIES, INC.
4. CLAMP-ALL CORP.
5. STANDARDS' ASTM C 1277 AND CISPI 310.
6. DESCRIPTION: STAINLESS-STEEL CORRUGATED SHIELD WITH STAINLESS-STEEL BANDS AND TIGHTENING DEVICES; AND ASTM C 564, RUBBER SLEEVE WITH INTEGRAL, CENTER PIPE STOP.

C. DRAWING PLANS, SCHEMATICS, AND DIAGRAMS INDICATE GENERAL LOCATION AND ARRANGEMENT OF PIPING SYSTEMS. INDICATED LOCATIONS AND ARRANGEMENTS WERE USED TO SIZE PIPE AND CALCULATE FRICTION LOSS, EXPANSION, PUMP SIZING, AND OTHER DESIGN CONSIDERATIONS. INSTALL PIPING AS INDICATED UNLESS DEVIATIONS TO LAYOUT ARE APPROVED ON COORDINATION DRAWINGS.
D. INSTALL PIPING IN CONCEALED LOCATIONS UNLESS OTHERWISE INDICATED AND EXCEPT IN EQUIPMENT ROOMS AND SERVICE AREAS.
E. INSTALL PIPING INDICATED TO BE EXPOSED AND PIPING IN EQUIPMENT ROOMS AND SERVICE AREAS AT RIGHT ANGLES OR PARALLEL TO BUILDING WALLS. DIAGONAL RUNS ARE PROHIBITED UNLESS SPECIFICALLY INDICATED OTHERWISE.
F. INSTALL PIPING ABOVE ACCESSIBLE CEILINGS TO ALLOW SUFFICIENT SPACE FOR CEILING PANEL REMOVAL.
G. INSTALL PIPING TO PERMIT VALVE SERVICING.
H. INSTALL PIPING AT INDICATED SLOPES.
I. INSTALL PIPING FREE OF SAGS AND BENDS.
J. INSTALL FITTINGS FOR CHANGES IN DIRECTION AND BRANCH CONNECTIONS.
K. INSTALL PIPING TO ALLOW APPLICATION OF INSULATION.
L. MAKE CHANGES IN DIRECTION FOR SOIL AND WASTE DRAINAGE AND VENT PIPING USING APPROPRIATE BRANCHES, BENDS, AND LONG-SWEEP BENDS. SANITARY TEES AND SHORT-SWEEP 1/4 BENDS MAY BE USED ON VERTICAL STACKS IF CHANGE IN DIRECTION OF FLOW IS FROM HORIZONTAL TO VERTICAL. USE LONG-TURN, DOUBLE Y-BRANCH AND 1/8-BEND FITTINGS IF TWO FIXTURES ARE INSTALLED BACK TO BACK OR SIDE BY SIDE WITH COMMON DRAIN PIPE. STRAIGHT TEES, ELBOWS. AND CROSSES MAY BE USED ON VENT LINES. DO NOT CHANGE DIRECTION OF FLOW MORE THAN 90 DEGREES. USE PROPER SIZE OF STANDARD INCREASERS AND REDUCERS IF PIPES OF DIFFERENT SIZES ARE CONNECTED. REDUCING SIZE OF DRAINAGE PIPING IN DIRECTION OF FLOW IS PROHIBITED.
M. LAY BURIED BUILDING DRAINAGE PIPING BEGINNING AT LOW POINT OF EACH SYSTEM. INSTALL TRUE TO GRADES AND ALIGNMENT INDICATED, WITH UNBROKEN CONTINUITY OF INVERT. PLACE HUB ENDS OF PIPING UPSTREAM. INSTALL REQUIRED GASKETS ACCORDING TO MANUFACTURER'S WRITTEN INSTRUCTIONS FOR USE OF LUBRICANTS, CEMENTS, AND OTHER INSTALLATION REQUIREMENTS. MAINTAIN SWAB IN PIPING AND PULL PAST EACH JOINT AS COMPLETED.
N. INSTALL SOIL AND WASTE DRAINAGE AND VENT PIPING AT THE FOLLOWING MINIMUM SLOPES UNLESS OTHERWISE INDICATED:
1. BUILDING SANITARY DRAIN: 2 PERCENT DO'M\IWARD IN DIRECTION OF FLOW FOR PIPING NPS 3 (ON 80) AND SMALLER; 1 PERCENT DOWNWARD IN DIRECTION OF FLOW FOR PIPING NPS 4 (DN 100) AND LARGER.
2. HORIZONTAL SANITARY DRAINAGE PIPING: 1 PERCENT DOWNWARD IN DIRECTION OF FLOW.
3. VENT PIPING: 1 PERCENT DOWN TOWARD VERTICAL FIXTURE VENT OR TOWARD VENT STACK.

O. INSTALL CAST-IRON SOIL PIPING ACCORDING TO CISPI'S "CAST IRON SOIL PIPE AND FITTINGS HANDBOOK," CHAPTER IV, "INSTALLATION OF CAST IRON SOIL PIPE AND FITTINGS."
1. INSTALL ENCASEMENT ON UNDERGROUND PIPING ACCORDING TO ASTM A 674 OR AWWA C105/A 21.5.

P. DO NOT ENCLOSE, COVER, OR PUT PIPING INTO OPERATION UNTIL IT IS INSPECTED AND APPROVED BY AUTHORITIES HAVING JURISDICTION.
Q. INSTALL SLEEVES FOR PIPING PENETRATIONS OF WALLS, CEILINGS, AND FLOORS.
R. INSTALL ESCUTCHEONS FOR PIPING PENETRATIONS OF WALLS, CEILINGS, AND FLOORS.
S. HANGER AND SUPPORT INSTALLATION COMPLY WITH REQUIREMENTS FOR PIPE HANGER AND SUPPORT DEVICES AND INSTALLATION.
1. INSTALL CARBON-STEEL PIPE HANGERS FOR HORIZONTAL PIPING IN NONCORROSIVE ENVIRONMENTS.
2. INSTALL STAINLESS-STEEL PIPE HANGERS FOR HORIZONTAL PIPING IN CORROSIVE ENVIRONMENTS.
3. INSTALL CARBON-STEEL PIPE SUPPORT CLAMPS FOR VERTICAL PIPING IN NONCORROSIVE ENVIRONMENTS.
4. INSTALL STAINLESS-STEEL PIPE SUPPORT CLAMPS FOR VERTICAL PIPING IN CORROSIVE ENVIRONMENTS.
5. VERTICAL PIPING: MSS TYPE 8 OR TYPE 42, CLAMPS.
6. INSTALL INDIVIDUAL. STRAIGHT, HORIZONTAL PIPING RUNS:
7. 100 FEET (30 M) AND LESS: MSS TYPE 1, ADJUSTABLE, STEEL CLEVIS HANGERS.
8. LONGER THAN 100 FEET {30 M): MSS TYPE 43, ADJUSTABLE ROLLER HANGERS.
9. LONGER THAN 100 FEET (30 M) IF INDICATED: MSS TYPE 49, SPRING CUSHION ROLLS.
10. MULTIPLE, STRAIGHT, HORIZONTAL PIPING RUNS 100 FEET (30 M) OR LONGER: MSS TYPE 44, PIPE ROLLS. SUPPORT PIPE ROLLS ON TRAPEZE.
11. BASE OF VERTICAL PIPING: MSS TYPE 52, SPRING HANGERS.

T. SUPPORT HORIZONTAL PIPING AND TUBING WITHIN 12 INCHES (300 MM) OF EACH FITTING, VALVE, AND COUPLING.
W. INSTALL HANGERS FOR CAST-IRON SOIL PIPING WITH THE FOLLOWING MAXIMUM HORIZONTAL SPACING AND MINIMUM ROD DIAMETERS:
U. SUPPORT VERTICAL PIPING AND TUBING AT BASE AND AT EACH FLOOR.
V. ROD DIAMETER MAY BE REDUCED ONE SIZE FOR DOUBLE-ROD HANGERS, WITH 3/8-INCH (10-MM) MINIMUM RODS.
1. NPS 1-1/2 AND NPS 2 (DN 40 AND DN 50): 60 INCHES (1500 MM) WITH 3/8-INCH (10-MM) ROD.
2. NPS 3 (DN 80): 60 INCHES (1500 MM) WITH 1/2-INCH (13-MM) ROD.
3. NPS 4 AND NPS 5 (DN 100 AND DN 125): 60 INCHES (1500 MM) WITH 5/8-INCH (16-MM) ROD.
4. NPS 6 AND NPS 8 (DN 150 AND DN 200): 60 INCHES (1500 MM) WITH 3/4-INCH (19-MM) ROD.
5. INSTALL SUPPORTS FOR VERTICAL CAST-IRON SOIL PIPING EVERY 15 FEET (4.5 M).

X. DURING INSTALLATION, NOTIFY AUTHORITIES HAVING JURISDICTION AT LEAST 24 HOURS BEFORE INSPECTION MUST BE MADE. PERFORM TESTS SPECIFIED BELOW IN PRESENCE OF AUTHORITIES HAVING JURISDICTION.
ROUGHING-IN INSPECTION: ARRANGE FOR INSPECTION OF PIPING BEFORE CONCEALING OR CLOSING-IN AFTER ROUGHING-IN AND BEFORE SETTING FIXTURES.
FINAL INSPECTION: ARRANGE FOR FINAL INSPECTION BY AUTHORITIES HAVING JURISDICTION TO OBSERVE TESTS SPECIFIED BELOW AND TO ENSURE COMPLIANCE WITH REQUIREMENTS.
Y. REINSPECTION: IF AUTHORITIES HAVING JURISDICTION FIND THAT PIPING WILL NOT PASS TEST OR INSPECTION, MAKE REQUIRED CORRECTIONS AND ARRANGE FOR REINSPECTION.
Z. REPORTS: PREPARE INSPECTION REPORTS AND HAVE THEM SIGNED BY AUTHORITIES HAVING JURISDICTION.

AA. TEST SANITARY DRAINAGE AND VENT PIPING ACCORDING TO PROCEDURES OF AUTI-IORITIES HAVING JURISDICTION OR, IN ABSENCE OF PUBLISHED PROCEDURES, AS FOLLOWS:
1. TEST FOR LEAKS AND DEFECTS IN NEW PIPING AND PARTS OF EXISTING PIPING THAT HAVE BEEN ALTERED, EXTENDED, OR REPAIRED. IF TESTING IS PERFORMED IN SEGMENTS, SUBMIT SEPARATE REPORT FOR EACH TEST, COMPLETE WITH DIAGRAM OF PORTION OF PIPING TESTED.
2. LEAVE UNCOVERED AND UNCONCEALED NEW, ALTERED, EXTENDED, OR REPLACED DRAINAGE AND VENT PIPING UNTIL IT HAS BEEN TESTED AND APPROVED. EXPOSE WORK THAT WAS COVERED OR CONCEALED BEFORE IT WAS TESTED.
3. ROUGHING-IN PLUMBING TEST PROCEDURE: TEST DRAINAGE AND VENT PIPING EXCEPT OUTSIDE LEADERS ON COMPLETION OF ROUGHING-IN. CLOSE OPENINGS IN PIPING SYSTEM AND FILL WITH WATER TO POINT OF OVERFLOW, BUT NOT LESS THAN 10-FOOT HEAD OF WATER (30 KPA). FROM 15 MINUTES BEFORE INSPECTION STARTS TO COMPLETION OF INSPECTION, WATER LEVEL MUST NOT DROP. INSPECT JOINTS FOR LEAKS.
4. FINISHED PLUMBING TEST PROCEDURE: AFTER PLUMBING FIXTURES HAVE BEEN SET AND TRAPS FILLED WITH WATER, TEST CONNECTIONS AND PROVE THEY ARE GASTIGHT AND WATERTIGHT. PLUG VENT-STACK OPENINGS ON ROOF AND BUILDING DRAINS WHERE THEY LEAVE BUILDING. INTRODUCE AIR INTO PIPING SYSTEM EQUAL TO PRESSURE OF 1-INCH WG (250 PA). USE U-TUBE OR MANOMETER INSERTED IN TRAP OF WATER CLOSET TO MEASURE THIS PRESSURE. AIR PRESSURE MUST REMAIN CONSTANT WITHOUT INTRODUCING ADDITIONAL AIR THROUGHOUT PERIOD OF INSPECTION. INSPECT PLUMBING FIXTURE CONNECTIONS FOR GAS AND WATER LEAKS.
5. REPAIR LEAKS AND DEFECTS WITH NEW MATERIALS AND RETEST PIPING, OR PORTION THEREOF, UNTIL SATISFACTORY RESULTS ARE OBTAINED.

AB. CAP AND SUBJECT PIPING TO STATIC-WATER PRESSURE OF 50 PSIG (345 KPA) ABOVE OPERATING PRESSURE, WITHOUT EXCEEDING PRESSURE RATING OF PIPING SYSTEM MATERIALS. ISOLATE TEST SOURCE AND ALLOW TO STAND FOR FOUR HOURS, LEAKS AND LOSS IN TEST PRESSURE CONSTITUTE DEFECTS THAT MUST BE REPAIRED.
AC. REPAIR LEAKS AND DEFECTS V!TH NEW MATERIALS AND RETEST PIPING, OR PORTION THEREOF, UNTIL SATISFACTORY RESULTS ARE OBTAINED.
AD. PREPARE REPORTS FOR TESTS AND REQUIRED CORRECTIVE ACTION.

AE. CLEANING AND PROTECTION, CLEAN INTERIOR OF PIPING. REMOVE DIRT AND DEBRIS AS WORK PROGRESSES, PROTECT DRAINS DURING REMAINDER OF CONSTRUCTION PERIOD TO AVOID CLOGGING WITH DIRT AND DEBRIS AND TO PREVENT DAMAGE FROM TRAFFIC AND CONSTRUCTION WORK. PLACE PLUGS IN ENDS OF UNCOMPLETED PIPING AT END OF DAY AND WHEN WORK STOPS.

AF. ABOVEGROUND, SOIL AND WASTE PIPING 6" AND SMALLER SHALL BE ANY OF THE FOLLOWING:
1. SERVICE CLASS, CAST-IRON SOIL PIPE AND FITTINGS; GASKETS; AND GASKETS JOINTS.
2. HUBLESS, CAST-IRON SOIL PIPE AND FITTINGS HEAVY-DUTY HUBLESS-PIPING COUPLINGS; AND COUPLED JOINTS.

AI. ABOVEGROUND, SOIL AND WASTE PIPING 8" AND LARGER SHALL BE ANY OF THE FOLLOWING:
1.SERVICE WEIGHT(SV) HUB AND SPIGOT CAST IRON SOIL PIPE FITTINGS

AJ. ABOVEGROUND, VENT PIPING 6" AND SMALLER SHALL BE ANY OF THE FOLLOWING:
1.HUBLESS, CAST-IRON SOIL PIPE AND FITTINGS; CISPI HUBLESS-PIPING COUPLINGS; AND COUPLED JOINTS.

AK. ABOVEGROUND, VENT PIPING 8" AND LARGER SHALL BE ANY OF THE FOLLOWING:
1.SERV1CE CLASS, CAST-IRON SOIL PIPE AND FITTINGS; GASKETS; AND GASKETS JOINTS.

AL. UNDERGROUND, SOIL, WASTE, AND VENT PIPING 15" AND SMALLER SHALL BE ANY OF THE FOLLOWING:
1. SERVICE CLASS, CAST-IRON SOIL PIPE AND FITTINGS; GASKETS; AND GASKETS JOINTS

CLEANOUTS

A. EXPOSED METAL CLEANOUTS:
MANUFACTURERS: SUBJECT TO COMPLIANCE WITH REQUIREMENTS, PROVIDE PRODUCTS BY ONE OF THE FOLLOWING:
1. JOSAM COMPANY; JOSAM DIV.
2. MIFAB, INC.
3. SMITH, JAY R. MFG. CO.; DIVISION OF SMITH INDUSTRIES, INC.
4. TYLER PIPE; WADE DIV.
5. ZURN PLUMBING PRODUCTS GROUP; SPECIFICATION DRAINAGE OPERATION.

STANDARD: ASME A112.36.2M FOR CAST IRON FOR CLEANOUT TEST TEE.
SIZE: SAME AS CONNECTED DRAINAGE PIPING
BODY MATERIAL: HUB-AND-SPIGOT, CAST-IRON SOIL PIPE T-BRANCH AS REQUIRED TO MATCH CONNECTED PIPING.
CLOSURE: COUNTERSUNK PLUG.
CLOSURE PLUG SIZE: SAME AS OR NOT MORE THAN ONE SIZE SMALLER THAN CLEANOUT SIZE.
CLOSURE: STAINLESS-STEEL PLUG WITH SEAL.

B. METAL FLOOR CLEANOUTS:
MANUFACTURERS: SUBJECT TO COMPLIANCE WITH REQUIREMENTS, PROVIDE PRODUCTS BY ONE OF THE FOLLOWING:
1. JOSAM COMPANY; JOSAM DIV.
2. SMITH, JAY R. MFG. CO.; DIVISION OF SMITH INDUSTRIES, INC.
3. TYLER PIPE; WADE DIV.
4. A. MIFAB, INC.

STANDARD: ASME A112.36.2M FOR THREADED, ADJUSTABLE HOUSING CLEANOUT.
SIZE: SAME AS CONNECTED BRANCH.
TYPE: ADJUSTABLE HOUSING THREADED, ADJUSTABLE HOUSING.
BODY OR FERRULE: CAST IRON.
CLAMPING DEVICE: NOT REQUIRED.
OUTLET CONNECTION: THREADED.
CLOSURE: BRASS PLUG WITH STRAIGHT THREADS AND GASKET.
ADJUSTABLE HOUSING MATERIAL: CAST IRON WITH SET-SCREWS OR OTHER DEVICE.
FRAME AND COVER MATERIAL AND FINISH: ROUGH BRONZE.
FRAME AND COVER SHAPE: ROUND.
TOP LOADING CLASSIFICATION: LIGHT DUTY.
RISER: ASTM A 74, SERVICE CLASS, CAST-IRON DRAINAGE PIPE FITTING AND RISER TO CLEAN OUT.
STANDARD: ASME A112.3.1.
SIZE: SAME AS CONNECTED BRANCH.
HOUSING: STAINLESS STEEL.
CLOSURE: STAINLESS STEEL WITH SEAL.
RISER: STAINLESS-STEEL DRAINAGE PIPE FITTING TO CLEANOUT.

C. CAST-IRON WALL CLEANOUTS:
MANUFACTURERS: SUBJECT TO COMPLIANCE WITH REQUIREMENTS, PROVIDE PRODUCTS BY ONE OF THE FOLLOWING:
1. JOSAM COMPANY; JOSAM DIV.
2. MIFAB, INC.
3. SMITH, JAY R. MFG. CO.; DIVISION OF SMITH INDUSTRIES, INC.
4. TYLER PIPE; WADE DIV.
5. ZURN PLUMBING PRODUCTS GROUP; SPECIFICATION DRAINAGE OPERATION.

STANDARD: ASME A112.36.2M. INCLUDE WALL ACCESS.
SIZE: SAME AS CONNECTED DRAINAGE PIPING.
BODY: HUB-AND-SPIGOT, CAST-IRON SOIL PIPE T-BRANCH AS REQUIRED TO MATCH CONNECTED PIPING.
CLOSURE: COUNTERSUNK OR RAISED-HEAD, BRASS PLUG.
CLOSURE PLUG SIZE: SAME AS OR NOT MORE THAN ONE SIZE SMALLER THAN CLEANOUT SIZE.
WALL ACCESS: ROUND, STAINLESS-STEEL COVER PLATE WITH SCREW.
WALL ACCESS: ROUND, STAINLESS-STEEL WALL-INSTALLATION FRAME AND COVER.

D. INSTALL CLEANOUTS IN ABOVEGROUND PIPING AND BUILDING DRAIN PIPING ACCORDING TO THE FOLLOWING, UNLESS OTHERWISE INDICATED:
1. SIZE SAME AS DRAINAGE PIPING UP TO NPS 4 (DN 100). USE NPS 4 (DN 100) FOR LARGER DRAINAGE PIPING UNLESS LARGER CLEANOUT IS INDICATED.
2. LOCATE AT EACH CHANGE IN DIRECTION OF PIPING GREATER THAN 45 DEGREES.
3. LOCATE AT MINIMUM INTERVALS OF 50 FEET (15 M) FOR PIPING NPS 4 (DN 100) AND SMALLER AND 100 FEET (30 M) FOR LARGER PIPING.
4. LOCATE AT BASE OF EACH VERTICAL SOIL AND WASTE STACK.

E. FOR FLOOR CLEANOUTS FOR PIPING BELOW FLOORS, INSTALL CLEANOUT DECK PLATES WITH TOP FLUSH WITH FINISHED FLOOR.
F. FOR CLEANOUTS LOCATED IN CONCEALED PIPING, INSTALL CLEANOUT WALL ACCESS COVERS, OF TYPES INDICATED, WITH FRAME AND COVER FLUSH WITH FINISHED WALL
G. INSTALL FLOOR DRAINS AT LOW POINTS OF SURFACE AREAS TO BE DRAINED. SET GRATES OF DRAINS FLUSH WITH FINISHED FLOOR, UNLESS OTHERWISE INDICATED.
H. INSTALL ROOF FLASHING ASSEMBLIES ON SANITARY STACK VENTS AND VENT STACKS THAT EXTEND THROUGH ROOF.
I. ASSEMBLE OPEN DRAIN FITTINGS AND INSTALL WITH TOP OF HUB 2 INCHES (51 MM) ABOVE FLOOR.
J. INSTALL DEEP-SEAL TRAPS ON FLOOR DRAINS AND OTHER WASTE OUTLETS, IF INDICATED.
K. INSTALL FLOOR-DRAIN, TRAP-SEAL PRIMER FITTINGS ON INLET TO FLOOR DRAINS THAT REQUIRE TRAP-SEAL PRIMER CONNECTION.
1. EXCEPTION: FITTING MAY BE OMITTED IF TRAP HAS TRAP-SEAL PRIMER CONNECTION.
2. SIZE: SAME AS FLOOR DRAIN INLET.

L. INSTALL AIR-GAP FITTINGS ON DRAINING-TYPE BACKFLOW PREVENTERS AND ON INDIRECT-WASTE PIPING DISCHARGE INTO SANITARY DRAINAGE SYSTEM.

PLUMBING FIXTURES

A. ASSEMBLE PLUMBING FIXTURES, TRIM, FITTINGS, AND OTHER COMPONENTS ACCORDING TO MANUFACTURERS' WRITTEN INSTRUCTIONS.
1. INSTALL OFF-FLOOR SUPPORTS, AFFIXED TO BUILDING SUBSTRATE, FOR WALL-MOUNTING FIXTURES.
2. USE CARRIER SUPPORTS WITH WASTE FITTING AND SEAL FOR BACK-OUTLET FIXTURES.
3. USE CARRIER SUPPORTS WITHOUT WASTE FITTING FOR FIXTURES WITH TUBULAR WASTE PIPING.

B. USE CHAIR- TYPE CARRIER SUPPORTS WITH RECTANGULAR STEEL UPRIGHTS FOR ACCESSIBLE FIXTURES.
C. INSTALL BACK-OUTLET, WALL-MOUNTING FIXTURES ONTO WASTE FITTING SEALS AND ATTACH TO SUPPORTS.
D. INSTALL FLOOR-MOUNTING FIXTURES ON CLOSET FLANGES OR OTHER ATTACHMENTS TO PIPING OR BUILDING SUBSTRATE.
E. INSTALL WALL-MOUNTING FIXTURES WITH TUBULAR WASTE PIPING ATTACHED TO SUPPORTS.
F. INSTALL FLOOR-MOUNTING, BACK-OUTLET WATER CLOSETS ATTACHED TO BUILDING FLOOR SUBSTRATE AND WALL BRACKET AND ONTO WASTE FITTING SEALS.
G. INSTALL COUNTER-MOUNTING FIXTURES IN AND ATTACHED TO CASEWORK.
H. INSTALL FIXTURES LEVEL AND PLUMB ACCORDING TO ROUGHING-IN DRAWINGS.
I. INSTALL WATER-SUPPLY PIPING WITH STOP ON EACH SUPPLY TO EACH FIXTURE TO BE CONNECTED TO WATER DISTRIBUTION PIPING. ATTACH SUPPLIES TO SUPPORTS TO SUBSTRATE WITHIN PIPE SPACES BEHIND FIXTURES. INSTALL STOPS IN LOCATIONS WHERE THEY CAN BE EASILY REACHED FOR OPERATION.
J. EXCEPTION: USE BALL VALVES IF SUPPLY STOPS ARE NOT SPECIFIED WITH FIXTURE.
K. INSTALL TRAP AND TUBULAR WASTE PIPING ON DRAIN OUTLET OF EACH FIXTURE TO BE DIRECTLY CONNECTED TO SANITARY DRAINAGE SYSTEM.
L. INSTALL TUBULAR WASTE PIPING ON DRAIN OUTLET OF EACH FIXTURE TO BE INDIRECTLY CONNECTED TO DRAINAGE SYSTEM.
M. INSTALL FLUSHOMETER VALVES FOR ACCESSIBLE WATER CLOSETS AND URINALS WITH HANDLE MOUNTED ON WIDE SIDE OF COMPARTMENT. INSTALL OTHER ACTUATORS IN LOCATIONS THAT ARE EASY FOR PEOPLE WITH DISABILITIES TO REACH.
N. INSTALL TANKS FOR ACCESSIBLE, TANK-TYPE WATER CLOSETS WITH LEVER HANDLE MOUNTED ON WIDE SIDE OF COMPARTMENT.
O. INSTALL OPEN FRONT TOILET SEATS ON WATER CLOSETS.
P. INSTALL WATER-SUPPLY FLOW-CONTROL FITTINGS WITH SPECIFIED FLOW RATES IN FIXTURE SUPPLIES AT STOP VALVES.
Q. INSTALL FAUCET FLOW-CONTROL FITTINGS WITH SPECIFIED FLOW RATES AND PATTERNS IN FAUCET SPOUTS IF FAUCETS ARE NOT AVAILABLE WITH REQUIRED RATES AND PATTERNS. INCLUDE ADAPTERS IF REQUIRED.
R. INSTALL SHOWER FLOW-CONTROL FITTINGS WITH SPECIFIED MAXIMUM FLOW RATES IN SHOWER ARMS,
S. INSTALL TRAPS ON FIXTURE OUTLETS.
1. EXCEPTION: OMIT TRAP ON FIXTURES WITH INTEGRAL TRAPS.
2. EXCEPTION: OMIT TRAP ON INDIRECT WASTES, UNLESS OTHERWISE INDICATED.

U. INSTALL ESCUTCHEONS AT PIPING WALL CEILING PENETRATIONS IN EXPOSED, FINISHED LOCATIONS AND WITHIN CABINETS AND MILLWORK. USE OEEP-PATTERN ESCUTCHEONS IF REQUIRED TO CONCEAL PROTRUDING FITTINGS.
V. SEAL JOINTS BETWEEN FIXTURES AND WALLS, FLOORS, AND COUNTERTOPS USING SANITARY-TYPE, ONE-PART, MILDEW-RESISTANT SILICONE SEALANT. MATCH SEALANT COLOR TO FIXTURE COLOR.
W. VERIFY THAT INSTALLED PLUMBING FIXTURES ARE CATEGORIES AND TYPES SPECIFIED FOR LOCATIONS WHERE INSTALLED.
X. CHECK THAT PLUMBING FIXTURES ARE COMPLETE WITH TRIM, FAUCETS, FITTINGS, AND OTHER SPECIFIED COMPONENTS.
Y. INSPECT INSTALLED PLUMBING FIXTURES FOR DAMAGE. REPLACE DAMAGED FIXTURES AND COMPONENTS.
Z. TEST INSTALLED FIXTURES AFTER WATER SYSTEMS ARE PRESSURIZED FOR PROPER OPERATION. REPLACE MALFUNCTIONING FIXTURES AND COMPONENTS, THEN RETEST. REPEAT PROCEDURE UNTIL UNITS OPERATE PROPERLY.
AA. INSTALL FRESH BATTERIES IN SENSOR-OPERATED MECHANISMS.
AB. CLEAN FIXTURES, FAUCETS, AND OTHER FITTINGS WITH MANUFACTURERS' RECOMMENDED CLEANING METHODS AND MATERIALS. DO THE FOLLOWING:
1. REMOVE FAUCET SPOUTS AND STRAINERS, REMOVE SEDIMENT AND DEBRIS, AND REINSTALL STRAINERS AND SPOUTS.
2. REMOVE SEDIMENT AND DEBRIS FROM DRAINS.

AC. AFTER COMPLETING INSTALLATION OF EXPOSED, FACTORY-FINISHED FIXTURES, FAUCETS, AND FITTINGS, INSPECT EXPOSED FINISHES AND REPAIR DAMAGED FINISHES.

PLUMBING PIPING INSULATION

A. INSULATION MATERIALS
PRODUCTS SHALL NOT CONTAIN ASBESTOS, LEAD, MERCURY, OR MERCURY COMPOUNDS. PRODUCTS THAT COME IN CONTACT WITH STAINLESS STEEL SHALL HAVE A LEACHABLE CHLORIDE CONTENT OF LESS THAN 50 PPM WHEN TESTED ACCORDING TO ASTM C 871.

B. FOAM INSULATION MATERIALS SHALL NOT USE CFC OR HCFC BLOWING AGENTS IN THE MANUFACTURING PROCESS.

C. MINERAL-FIBER, PREFORMED PIPE INSULATION:
PRODUCTS: SUB.ECT TO COMPLIANCE WIn-1 REQUIREMENTS, PROI;IDE TI-IE FOLLOWING] [PROVIDE ONE OF THE FOLLOWING:
1. CERTAIN TEED, CO.
2. JOHNS MANVILLE; MICRO-LOK.
3. KNAUF INSULATION; 1000-DEGREE PIPE INSULATION.
4. MANSON INSULATION INC.; ALLEY-K.
5. OWENS CORNING; FIBERGLAS PIPE INSULATION.

TYPE I, 850 DEG F (454 DEG C) MATERIALS' MINERAL OR GLASS FIBERS BONDED WITH A THERMOSETTING RESIN. COMPLY WITH ASTM C 547, TYPE I, GRADE A, WITH FACTORY-APPLIED ASJ-SSL. FACTORY-APPLIED JACKET REQUIREMENTS ARE SPECIFIED IN "FACTORY-APPLIED JACKETS" ARTICLE.

D. MINERAL-FIBER INSULATING CEMENT: COMPLY WITH ASTM C 195.
PRODUCTS: SUBJECT TO COMPLIANCE WITH REQUIREMENTS, PROVIDE THE FOLLOWING:
1. RAMCO INSULATION, INC.; SUPER-STIK.

E. MINERAL-FIBER, HYDRAULIC-SETTING INSULATING AND FINISHING CEMENT: COMPLY WITH ASTM C 449.
PRODUCTS: SUBJECT TO COMPLIANCE WITH REQUIREMENTS, PROVIDE THE FOLLOWING:
1. RAMCO INSULATION, INC.; RAMCOTE 1200 AND QUIK-COTE.

F. ADHESIVES
MATERIALS SHALL BE COMPATIBLE I'!TH INSULATION MATERIALS, JACKETS, AND SUBSTRATES AND FOR BONDING INSULATION TO ITSELF AND TO SURFACES TO BE INSULATED, UNLESS OTHERWISE INDICATED.
MINERAL-FIBER ADHESIVE: COMPLY WITH MIL-A-3316C, CLASS 2, GRADE A.
PRODUCTS: SUBJECT TO COMPLIANCE WITH REQUIREMENTS, PROVIDE ONE OF THE FOLLOWING:
1. CHILDERS BRAND, SPECIALTY CONSTRUCTION BRANDS, INC., A BUSINESS OF H. B. FULLER COMPANY; CP-127.
2. EAGLE BRIDGES – MARATHON INDUSTRIES; 225.
3. FOSTER BRAND, SPECIALTY CONSTRUCTION BRANDS, INC., A BUSINESS OF H. B. FULLER COMPANY; 85-60/85-70.
4. MON-ECO INDUSTRIES, INC.; 22-25.

FOR INDOOR APPLICATIONS, USE ADHESIVE THAT HAS A VOC CONTENT OF 80 G/L OR LESS WHEN CALCULATED ACCORDING TO 40 CFR 59, SUBPART D (EPA METHOD 24).

G. ASJ ADHESIVE, AND FSK JACKET ADHESIVE: COMPLY WITH MIL-A-3316C, CLASS 2, GRADE A FOR BONDING INSULATION JACKET LAP SEAMS AND JOINTS.
PRODUCTS: SUBJECT TO COMPLIANCE WITH REQUIREMENTS, PROVIDE ONE OF THE FDLLOI'ING:
1. CHILDERS BRAND, SPECIALTY CONSTRUCTION BRANDS, INC., A BUSINES

STATE OF TEXAS
NORMAN S. HOFFMAN
95483
LICENSED PROFESSIONAL ENGINEER

The seal appearing on this document was authorized by NORMAN HOFFMAN P.E. 95483 8/10/2018

GALVESTON COUNTY
BEACH PAVILION
CRYSTAL BEACH, TX 77650

BE-Arc LLC Project No : C-13-007.01

Ibis Engineering
REG # F-11156
P.O. Box 55171
Galveston, Texas 77555
PH 409.621.6740
THIS PRINT IS THE PROPERTY OF IBIS ENGINEERING IT MUST NOT BE TRACED OR REPRODUCED IN ANY MANNER NOR SHALL IT BE SUBMITTED WITHOUT PRIOR WRITTEN CONSENT FROM IBIS ENGINEERING.

easterwood
ARCHITECTS STUDIO
409-354-8976
EASTERWOOD@BE-ARC.COM
2328 BALL STREET
GALVESTON TEXAS 77550

DATE	REVISION

BID SET

DATE ISSUED:
8/10/2018

COPYRIGHT 2018

P4.0

PLUMBING FIXTURE SPECIFICATION

COUNTY APPROVAL:
SIGNATURE _____ DATE_____

TYPE: HS-1
DESCRIPTION: DUKE MANUFACTUREING, WALL MOUNTED, 10" X 14" X 6".
FAUCET: CHROME PLATED BRASS DECK MOUNTED FAUCET WITH 5" SPOUT, 4" WRIST BLADE HANDLES ON 8" CENTERS, QUARTER TURN OPERATING CARTRIDGES, VANDAL RESISTANT 2.2 GPM AERATOR. CHICAGO MODEL 404-317CP-E12VPJKCP.
STRAINER: CHROME PLATED BRASS GRID STRAINER WITH 6" LONG 17 GAUGE 1-1/4" TAILPIECE WITH LOCK NUT. CHICAGO 327-XCP.
P-TRAP: 1-1/4" CHROME PLATED CAST BRASS TRAP WITH CLEANOUT AND GROUND JOINT ELBOW AND SLIP NUTS. 1-1/4"CHROME PLATE CAST BRASS EXTENSION TO WALL WITH ESCUTCHEON PLATE. MCGUIRE 8088 AND 1127.
SUPPLIES: 1/2" I.P.S. X 3/8" O.D.CHROME PLATED LOOSE KEY STOP VALVE W/ ESCUTCHEON AND 3/8" COMPRESSION CHROME PLATED FLEXIBLE RISER. CHICAGO 1017.
ROUGH-IN: 2" WASTE, 2" VENT, 1/2" HOT AND COLD WATER. REFER TO ARCHITECTURAL DRAWINGS FOR HEIGHT REQUIREMENTS.

TYPE: L-1 (T.A.S. COMPLIANT FOR ADULTS)
DESCRIPTION: LAVATORY, WALL HUNG, WHITE VITREOUS CHINA, 20½" X 18¼" W/ FRONT OVERFLOW AND CONCEALED ARM SUPPORTS, FAUCET HOLES ON 8" CENTERS. AMERICAN STANDARD "LUCERNE" 0356.015, OR APPROVED EQUAL.
FAUCET: CHROME PLATED BRASS DECK MOUNTED FAUCET WITH 5" SPOUT, 4" WRIST BLADE HANDLES ON 8" CENTERS, QUARTER TURN OPERATING CARTRIDGES, VANDAL RESISTANT 2.2 GPM AERATOR. CHICAGO MODEL 404-317CP-E12VPJKCP.
STRAINER: CHROME PLATED BRASS GRID STRAINER WITH 6" LONG 17 GAUGE 1-1/4" TAILPIECE WITH LOCK NUT. CHICAGO 327-XCP.
P-TRAP: 1-1/4" CHROME PLATED CAST BRASS TRAP WITH CLEANOUT AND GROUND JOINT ELBOW AND SLIP NUTS. 1-1/4"CHROME PLATE CAST BRASS EXTENSION TO WALL WITH ESCUTCHEON PLATE. MCGUIRE 8088 AND 1127.
SUPPLIES: 1/2" I.P.S. X 3/8" O.D.CHROME PLATED LOOSE KEY STOP VALVE W/ ESCUTCHEON AND 3/8" COMPRESSION CHROME PLATED FLEXIBLE RISER. CHICAGO 1017.
ROUGH-IN: 2" WASTE, 2" VENT, 1/2" HOT AND COLD WATER. REFER TO ARCHITECTURAL DRAWINGS FOR HEIGHT REQUIREMENTS.

TYPE: SK-1 (T.A.S. COMPLIANT FOR ADULTS)
DESCRIPTION: SINK, COUNTER MOUNTED, SELF-RIMMING, 20 GAUGE TYPE 304 STAINLESS STEEL, 33" X 21 X 5-3/8" DEEP, DOUBLE COMPARTMENT WITH FAUCET DECK. DRAIN OUTLETS OFF-CENTER TO REAR OF BASIN. THREE FAUCET HOLES ON 4" CENTERS. ELKAY GECR-3321.
FAUCET: CHROME PLATED BRASS DECK MOUNTED FITTING WITH 8" SWING GOOSENECK SPOUT AND 4" WRIST BLADE HANDLES ON 8" CENTERS. QUARTER TURN OPERATING CARTRIDGES, 2.2 GPM AERATOR. CHICAGO MODEL 201-AGN8AE3-317CP.
STRAINER: TWO HEAVY DUTY FORGED STAINLESS STEEL BASKET STRAINERS, EACH WITH 1-1/2" OUTLET, LESS TAILPIECE. MCGUIRE 151A-LT.
P-TRAP: 1-1/2" END OUTLET 16" CENTERS 17 GAUGE CONTINUOUS WASTE WITH CAST BRASS TEE AND SLIP NUTS. MCGUIRE 111C16G17.1-1/2" CHROME PLATED CAST BRASS TRAP WITH CLEANOUT AND GROUND JOINT ELBOW AND SLIP NUTS. 1-1/2"CHROME PLATE CAST BRASS EXTENSION TO WALL WITH ESCUTCHEON PLATE. MCGUIRE 8089 AND 2127.
SUPPLIES: 1/2" I.P.S. X 3/8" O.D.CHROME PLATED LOOSE KEY STOP VALVE WITH ESCUTCHEON AND 3/8" COMPRESSION CHROME PLATED FLEXIBLE RISER. CHICAGO 1017.
ROUGH-IN: 2" WASTE, 2" VENT, 1/2" HOT AND COLD WATER. REFER TO ARCHITECTURAL DRAWINGS FOR HEIGHT REQUIREMENTS.

TYPE: SH-1
DESCRIPTION: BRADLEY WS-1W SINGLE STATION ECONO-WALL SHOWER, STANDARD HEIGHT, THERMOSATIC MIXING VALVE, 1.5 GPM FLOW CONTROL SHOWER HEAD. SHOWER DRAIN SHALL BE MANUFACTURED BY ZURN, WITH HEEL-PROOF STRAINER, NICKEL HEAD, AND SHALL BE VANDAL PROOF.

TYPE: HB-1 - GENERAL USE
DESCRIPTION: HOSE BIBB, 3/4" INLET, CHROME PLATED BRASS, VACUUM BREAKER, REMOVABLE TEE HANDLE. CHICAGO 952.
ROUGH-IN: 3/4" COLD WATER

TYPE: TMV
DESCRIPTION: THERMOSTATIC MIXING VALVE. SCHEDULED ON DRAWINGS.

TYPE: FD-1
SERVICE: TOILET ROOMS AND GENERAL USE
DESCRIPTION: FLOOR DRAIN, BOTTOM OUTLET CAST IRON BODY, ADJUSTABLE 6" DIAMETER NICKEL BRONZE STRAINER WITH VANDAL PROOF SCREWS, INTEGRAL CLAMPING DEVICE. WADE 1100-STD6-1.
TRAP SEAL: PROVIDE PRO-SET SYSTEMS, INC. TRAP GUARD FACTORY FITTED TO MATCH EACH FLOOR DRAIN BY SIZE, MODEL, AND MANUFACTURER.
ROUGH-IN: REFER TO FLOOR PLANS FOR SIZES. COORDINATE FINAL LOCATION AND INSTALLATION WITH ARCHITECTURAL DRAWINGS / FLOOR CONSTRUCTION.

TYPE; FCO
DESCRIPTION: FLOOR CLEANOUT, CAST IRON BODY WITH THREADED ADJUSTABLE HOUSING, FERRULE WITH TAPERED BRASS PLUG, AND ROUND SCORIATED NICKEL BRONZE COVER. PROVIDE CARPET MARKER WHERE REQUIRED. WADE 8130AF.

TYPE: WCO
DESCRIPTION: WALL CLEANOUT. CAST IRON CLEANOUT FERRULE, COUNTERSUNK BRASS PLUG AND ROUND STAINLESS COVER PLATE WITH CENTER SECURING SCREW. PROVIDE CAST IRON CLEANOUT TEE IN LIEU OF FERRULE AS REQUIRED FOR WALL CONSTRUCTION. WADE 8550E OR WADE 8560E WITH WADE 8302 SQ. HINGED CLEANOUT ACCESS NICKEL BRONZE.

TYPE: RVB-1
DESCRIPTION: REFRIGERATOR VALVE BOX, 10-3/4" X 9", 16 GAUGE STEEL WITH EPOXY FINISH, 5/8" O.D. SWEAT CONNECTION. PROVIDE FILTER WHEN MAKING FINAL CONNECTION. GUY GRAY BIM-875 WITH AQUA-PURE AP717 FILTER.
ROUGH-IN: 1/2" COLD WATER

TYPE: ECO
DESCRIPTION: EXTERIOR CLEANOUT TO GRADE, CAST IRON BODY WITH THREADED ADJUSTABLE HOUSING, FERRULE WITH TAPERED BRASS PLUG, AND ROUND SCORIATED CAST IRON TRACTOR TYPE COVER WITH SECURITY SCREWS. IF LOCATED IN ASPHALT OR DIRT PROVIDE 18" X 18" X 12" CONCRETE PAD. WADE 6000Z-179.

TYPE: FCO
DESCRIPTION: FLOOR CLEANOUT, CAST IRON BODY WITH THREADED ADJUSTABLE HOUSING, FERRULE WITH TAPERED BRASS PLUG, AND ROUND SCORIATED NICKEL BRONZE COVER. PROVIDE CARPET MARKER WHERE REQUIRED. WADE 8130AF.

TYPE: TP-1
DESCRIPTION: TRAP PRIMERS SHALL BE PPP MODEL MPB-500 OR APPROVED EQUAL WITH RECYCLE TIMER WITH PRE-SET TIMER OPENING FOR 10 SECONDS EVERY 24 HOURS. DISTRIBUTION MANIFOLD UNITS (DU SERIES) DRAIN OUTLET: 5/8" AND 1/2" COMPRESSION FITTINGS. SAEJ512-1/2 FEMALE NPT ANSI/ASME B1.20.1 CIRCUIT BREAKER, TEST SWITCH, TIMER SOLENOID VALVE UP LISTED. ELECTRICAL ASSEMBLY LISTED PER UL#73. TERMPERATURE/PRESSURE: 32F TO 125 F, 20 PSI - 150 PSI, MIN. 2 OZ WATER AT 20 PSI PER DRAIN SERVED. WITH ACCESS DOOR.

TYPE: WC-1 (T.A.S. COMPLIANT DEPENDING UPON MOUNTING HEIGHT)
DESCRIPTION: 2467.100 'AMERICAN STANDARD' 17" HEIGHT, ELONGATED BOWL, VITREOUS CHINA "CADET" 295C 'CHURCH' WHITE, SOLID PLASTIC, OPEN FRONT SEAT W/ A STAINLESS STEEL CHECK HINGE. WATER CLOSET RIM HEIGHT SHALL BY 17" ABOVE FINISHED FLOOR LEVEL. CONTRACTOR TO CONFIRM WATER PRESSURE IS SUFFICINET TO OPERATE FLUSH TANK, PER MANUFACTURE'S REQUIREMENTS.
SEAT: ELONGATED OPEN FRONT WHITE PLASTIC SEAT WITH SELF-SUSTAINING CHECK HINGES. OLSONITE 95SSC.
CARRIER: WADE VERTICAL SERIES W-340, OR HORIZONTAL SERIES W-310.
ROUGH-IN: 4" WASTE, 2" VENT, 1" COLD WATER. REFER TO ARCHITECTURAL DRAWINGS FOR HEIGHT REQUIREMENTS.

GENERAL NOTES:

ALL LAVATORIES AND SINKS SHALL BE SUPPLIED WITH HOT AND COLD WATER TO FAUCETS AS INDICATED ON PLANS AND FIXTURE SCHEDULE. PROVIDE CHROME PLATED BRASS SUPPLY STOPS WITH LOOSE KEYS AND WALL ESCUTCHEONS. PROVIDE CHROME PLATED FLEXIBLE RISERS OF SIZE REQUIRED TO PROPERLY CONNECT FIXTURES. PROVIDE 17 GAUGE CHROME PLATED CAST BRASS P- TRAP WITH CLEANOUT AND EXTENSION TO WALL WITH ESCUTCHEON.

REFER TO FIXTURE SCHEDULE FOR MINIMUM SIZES OF PLUMBING FIXTURE ROUGH-INS.

PROVIDE MOLDED CLOSED CELL ANTI-MICROBIAL VINYL INSULATION KITS AT ALL LAVATORIES AND SINKS REQUIRED TO BE T.A.S. ACCESSIBLE (TRUEBRO LAV-GUARD 2 SERIES). ALL SUCH FIXTURES AND FINAL INSTALLATIONS SHALL COMPLY WITH THE STATE ACCESSIBILITY STANDARDS REQUIREMENTS.

STATE OF TEXAS
NORMAN S. HOFFMAN
95483
LICENSED PROFESSIONAL ENGINEER

The seal appearing on this document was authorized by NORMAN HOFFMAN P.E. 95483 8/10/2018

GALVESTON COUNTY BEACH PAVILION CRYSTAL BEACH, TX 77650

BE-Arc LLC Project No : C-13-007.01

Lois Engineering
REG # F-11156
P.O. Box 45171
Galveston, Texas 77555
PH 409.621.6740

THIS PRINT, THE PROPERTY OF LES, MAY NOT BE REPRODUCED IN ANY MANNER NOR DO ANY PARTS THEREOF MAY BE USED FOR ANY OTHER PROJECT WITHOUT PRIOR WRITTEN CONSENT FROM BES CORPORATION.

easterwood ARCHITECTS STUDIO
EASTERWOOD@BE-ARC.COM
409-354-8976
2328 BALL STREET
GALVESTON TEXAS 77550

DATE	REVISION

BID SET

DATE ISSUED: 8/10/2018

COPYRIGHT 2018

P4.1

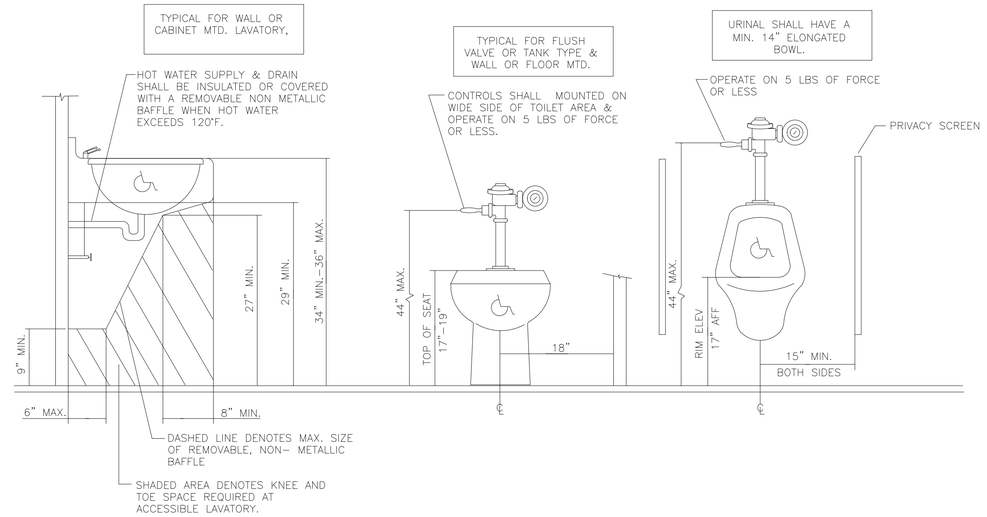

1 P4.0 NOT USED
Scale: N.T.S.

4 P4.0 HANDICAP PLUMBING FIXTURE INSTALLATION
Scale: N.T.S.

COUNTY APPROVAL:
SIGNATURE _____ DATE_____

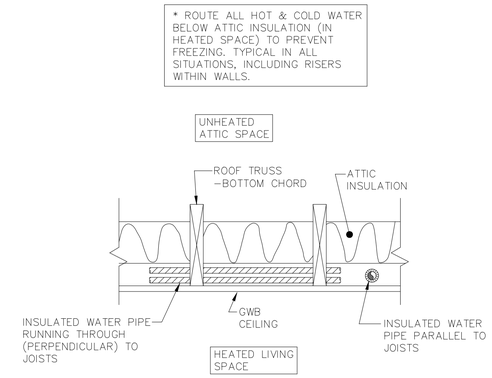

9 P4.0 WATER PIPING ROUTED IN ATTIC DETAIL
Scale: N.T.S.

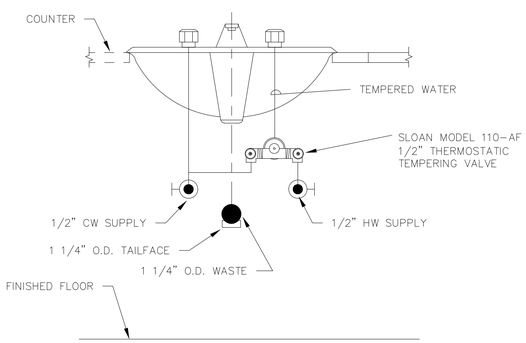

2 P4.0 LOCAL MIXING VALVE DETAIL
Scale: N.T.S.

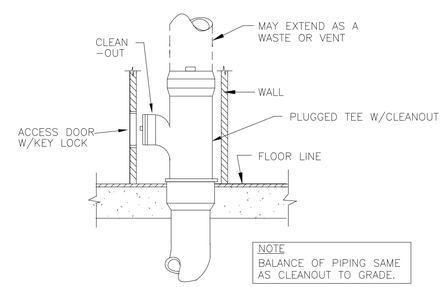

5 P4.0 WALL CLEANOUT DETAIL
Scale: N.T.S.

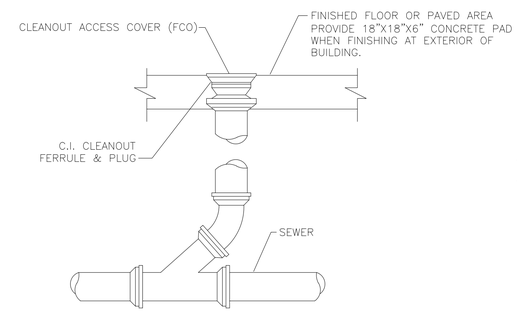

7 P4.0 CLEANOUT DETAIL
Scale: N.T.S.

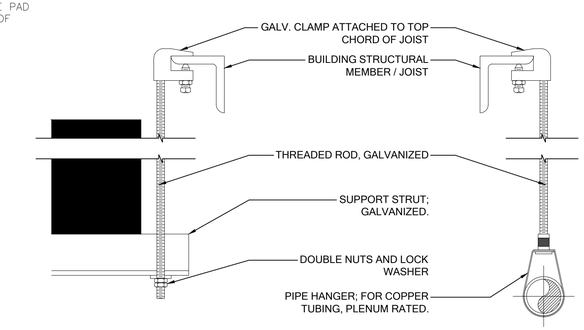

3 PIPE SUPPORT
SCALE: NONE

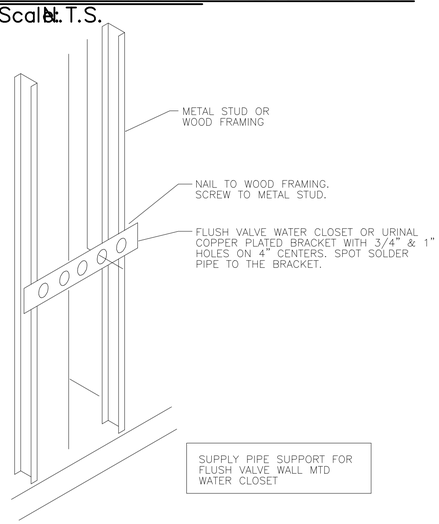

3 P4.0 WATER CLOSET/ URINAL PIPE SUPPORT DETAIL
Scale: N.T.S.

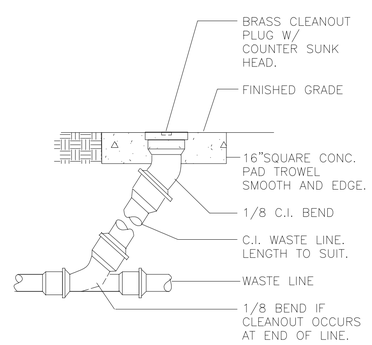

6 P4.0 CLEANOUT TO GRADE
Scale: N.T.S.

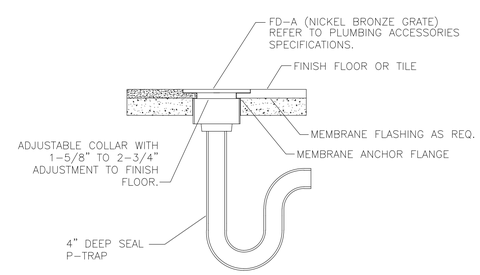

8 P4.0 TOILET AREA FLOOR DRAIN
Scale: N.T.S.

STATE OF TEXAS
NORMAN S. HOFFMAN
95483
LICENSED
PROFESSIONAL ENGINEER

The seal appearing on this document was authorized by NORMAN HOFFMAN P.E. 95483 8/10/2018

GALVESTON COUNTY
BEACH PAVILION
CRYSTAL BEACH, TX 77650

BE–Arc LLC Project No : C–13–007.01

Lbs Engineering
REC # F–11156
P.O. Box 457
Galveston, Texas 77553
PH 409.621.6740
THIS PRINT IS THE PROPERTY OF LBS ENGINEERING AND MAY NOT BE REPRODUCED IN ANY MANNER NOR DISTRIBUTED TO ANY OTHER PARTY WITHOUT PRIOR WRITTEN CONSENT FROM LBS ENGINEERING.

easterwood
ARCHITECTS STUDIO
409-354-8976
EASTERWOOD@BE-ARC.COM
2328 BALL STREET
GALVESTON TEXAS 77550

DATE	REVISION

BID SET

DATE ISSUED:
8/10/2018

COPYRIGHT 2018

P5.0.

COUNTY APPROVAL:
SIGNATURE _____ DATE_____

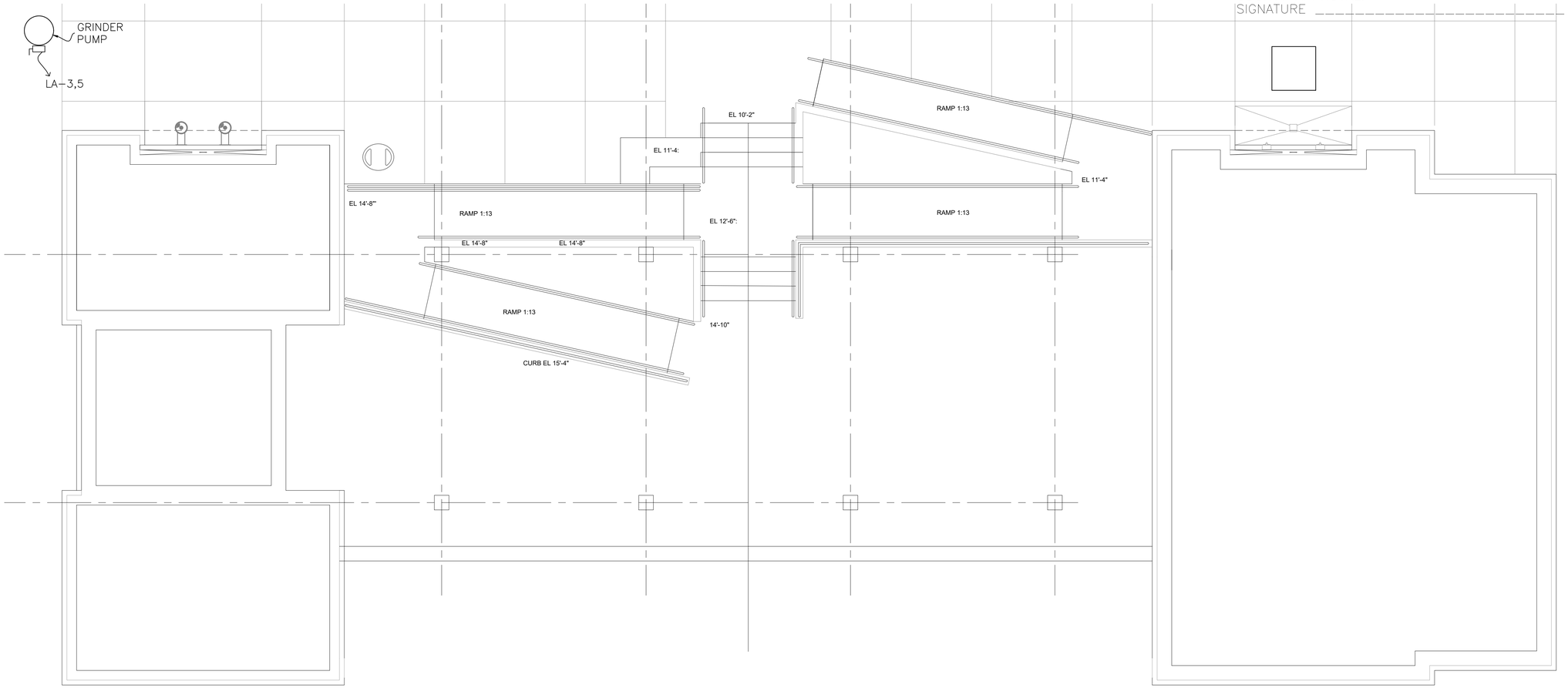

1 LOWER LEVEL
POWER & LIGHTING PLAN
SCALE: 1/4" = 1'-0"

The seal appearing on this document was authorized by JANET MURRAY HOFFMAN P.E. 102117 8/10/2018

STATE OF TEXAS
JANET MURRAY HOFFMAN
102117
LICENSED
PROFESSIONAL ENGINEER

GALVESTON COUNTY
BEACH PAVILION
CRYSTAL BEACH, TX 77650

BE-Arc LLC Project No : C-13-007.01

bis Engineering
REG # F-11156
P.O. Box 457
Gainesville, Texas 76255
PH 409.521.6740

THIS PRINT, IS THE PROPERTY OF BIS ENGINEERING AND MAY NOT BE USED OR REPRODUCED IN ANY MANNER NOR PRINTED, LOANED OR TRANSFERRED TO ANY OTHER PERSON OR CORPORATION WITHOUT PRIOR WRITTEN CONSENT FROM BIS ENGINEERING.

easterwood
ARCHITECTS STUDIO
409-354-8976
EASTERWOOD@BE-ARC.COM
2328 BALL STREET
GALVESTON TEXAS 77550

DATE	REVISION

BID SET

DATE ISSUED:
8/10/2018

COPYRIGHT 2018

E1.0

COUNTY APPROVAL:
SIGNATURE _____ DATE_____

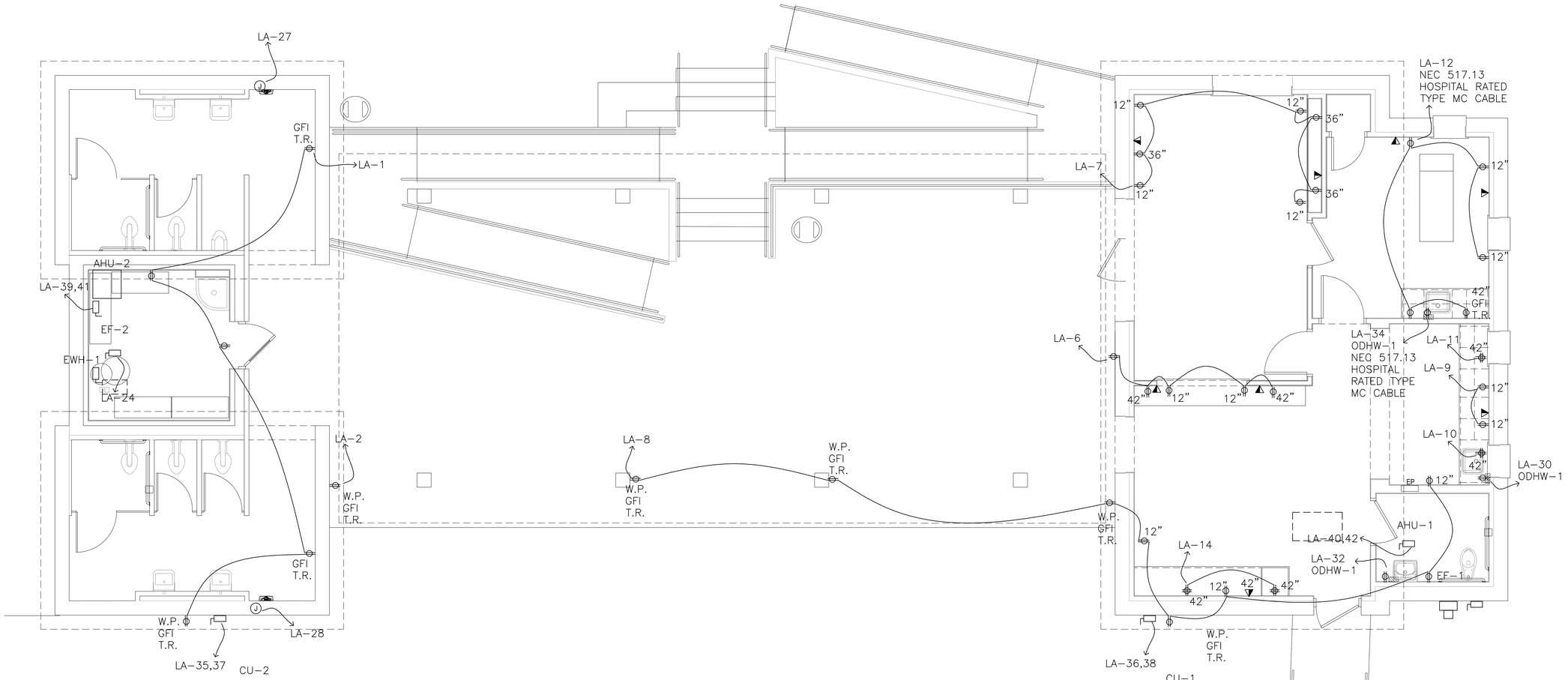

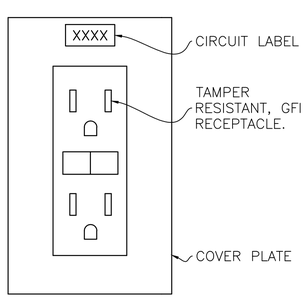

- ALL RCPT. ARE TR, GFCI
- PROVIDE CIRCUIT LABEL

KEYED NOTES:
1. R6

1 MAIN LEVEL POWER PLAN
SCALE: 1/4" = 1'-0"

The seal appearing on this document was authorized by JANET MURRAY HOFFMAN P.E. 102117 8/10/2018

STATE OF TEXAS
JANET MURRAY HOFFMAN
102117
LICENSED
PROFESSIONAL ENGINEER

GALVESTON COUNTY
BEACH PAVILION
CRYSTAL BEACH, TX 77650

BE-Arc LLC Project No : C-13-007.01

Ibis Engineering
REC # F-11156
P.O. Box 45171
Galveston, Texas 77555
PH 409.521.6740

THIS PRINT, THE PROPERTY OF IBIS ENGINEERING, MAY NOT BE COPIED OR REPRODUCED IN ANY MANNER NOR USED FOR ANY OTHER PURPOSE WITHOUT PRIOR WRITTEN CONSENT FROM IBIS ENGINEERING.

easterwood
ARCHITECTS STUDIO
409-354-8976
EASTERWOOD@BE-ARC.COM
2328 BALL STREET
GALVESTON TEXAS 77550

DATE	REVISION

BID SET

DATE ISSUED:
8/10/2018

COPYRIGHT 2018

E1.1

COUNTY APPROVAL:
SIGNATURE _____ DATE_____

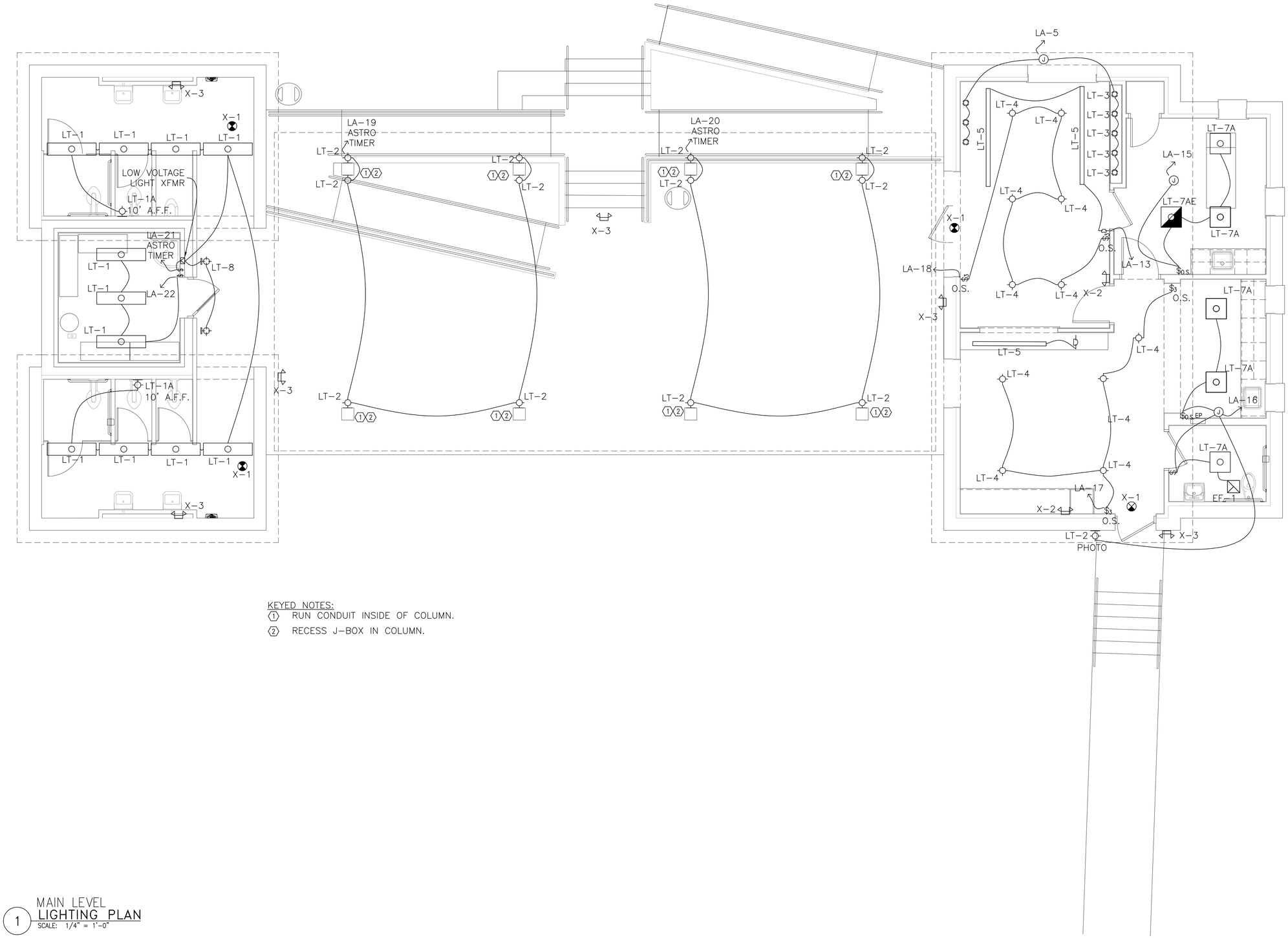

KEYED NOTES:
1. RUN CONDUIT INSIDE OF COLUMN.
2. RECESS J-BOX IN COLUMN.

1 MAIN LEVEL
LIGHTING PLAN
SCALE: 1/4" = 1'-0"

STATE OF TEXAS
JANET MURRAY HOFFMAN
102117
LICENSED
PROFESSIONAL ENGINEER

The seal appearing on this document was authorized by JANET MURRAY HOFFMAN P.E. 102117 8/10/2018

GALVESTON COUNTY
BEACH PAVILION
CRYSTAL BEACH, TX 77650

BE-Arc LLC Project No : C-13-007.01

bis Engineering
REG # F-11156
P.O. Box 45171
Galveston, Texas 77555
PH 409.621.6740

THIS PRINT IS THE PROPERTY OF BIS ENGINEERING AND MAY NOT BE COPIED OR REPRODUCED IN ANY MANNER NOR PRINTED IN ANY FORMAT WITHOUT PRIOR WRITTEN CONSENT FROM BIS ENGINEERING.

easterwood
ARCHITECTS STUDIO
409-354-8976
EASTERWOOD@BE-ARC.COM
2328 BALL STREET
GALVESTON TEXAS 77550

DATE	REVISION

BID SET

DATE ISSUED:
8/10/2018

COPYRIGHT 2018

E1.2

Panel Schedule LA

Source Information:	Enclosure Information:	Circuit Information:	Protection Information:	Conductor Information:
Size:	NEMA: Type 1	Circuits: 42 / 42	Frame Size: 200A	Conductor: 2-4/0 ga.
Impedance:	Main Connection: breaker	Voltage: 120 / 240	Load (A): 122	Neutral: 1-4/0 ga.
Xfmr AIC:	Ground Buss: Yes	System: 1Ø,	% Factor: 160	Ground: 1-6 ga.
Voltage Pri:	Neutral Buss: Yes	Hertz: 60	OCPD Size: 200A	Insulation: THHN
Voltage Sec: 240 / 120 V	CT Meter: No			Material: Copper
Phase: 1	Entrance: Bottom			Raceway: PVC-40

					Load - kVA					Load - kVA						
Ct#	Load Description	Rway Size	Cdtr Size	OCPD Size	AØ	BØ	CØ	L	CØ	BØ	AØ	OCPD Size	Cdtr Size	Rway Size	Load Description	Ct#
1	RCPT		(1) 12 ga.	20A /1	0.72			L1			0.72	20A /1	(1) 12 ga.		RCPT	2
3	GRINDER		(2) 12 ga.	20A /2				L2		0		20A /1	(1) 12 ga.		SPARE	4
5	LTS		(1) 12 ga.	20A /1	0.88			L1			0.9	20A /1	(1) 12 ga.		RCPT	6
7	RCPT		(1) 12 ga.	20A /1		0.72		L2		1.44		20A /1	(1) 12 ga.		RCPT	8
9	RCPT		(1) 12 ga.	20A /1	0.36			L1			0.36	20A /1	(1) 12 ga.		RCPT	10
11	RCPT TIMERS		(1) 12 ga.	20A /1		0.36		L2		0.9		20A /1	(1) 12 ga.		MEDICAL RCPT	12
13	TRACK LTS		(1) 12 ga.	20A /1	1.8			L1			0.18	20A /1	(1) 12 ga.		SPARE	14
15	MEDICAL LTS		(1) 12 ga.	20A /1		0.88		L2		0.88		20A /1	(1) 12 ga.		LTS	16
17	LTS		(1) 12 ga.	20A /1	0.88			L1			0.88	20A /1	(1) 12 ga.		LTS	18
19	LTS		(1) 12 ga.	20A /1		0.88		L2		0.88		20A /1	(1) 12 ga.		LTS	20
21	LTS		(1) 12 ga.	20A /1	0.88			L1			0.88	20A /1	(1) 12 ga.		LTS	22
23	EMERGENCY LTS (NON MEDICAL)		(1) 12 ga.	20A /1		0.88		L2				20A /1	(1) 12 ga.		EF-2	24
25	SPARE		(1) 12 ga.	20A /1	0			L1			0	20A /1	(1) 12 ga.		SPARE	26
27	HAND DRYER		(1) 12 ga.	20A /1		1.2		L2		1.2		20A /1	(1) 12 ga.		HAND DRYER	28
29	RCPT		(1) 12 ga.	20A /1	0.36			L1			1.2	20A /1	(1) 12 ga.		IHW KITCHEN	30
31	EHW-1		(2) 12 ga.	20A /2		1.25		L2		1.2		20A /1	(1) 12 ga.		IHW BATH	32
33	---				1.25			L1			1.2	20A /1	(1) 12 ga.		MEDICAL IHW SINK	34
35	CU-2		(2) 12 ga.	20A /2		1.6		L2		3.2		35A /2	(2) 8 ga.		CU-1	36
37	---				1.6			L1			3.2				---	38
39	AHU-2		(2) 10 ga.	30A /2				L2				45A /2	(2) 8 ga.		AHU-1	40
41	---							L1							---	42
	Phase Totals - kVA:				9.05	7.77				10.42	10.72					

Load Balance:

PhaseA:	PhaseB:
19.77 kVA	18.19 kVA

Phase Balance Differential: 9.25%

Load Totals:

	Amps:	kW:	kVA:
Connected Load:	166.29	33.40	37.91
w/ Demand Factors:	121.63	23.49	26.69

COUNTY APPROVAL:
SIGNATURE ______________________________ DATE_____________

LA Load Summary

Service Characterization :
- Computation Method : Office / Per Maximum Phase Load Method
- NEC Table : 310.16
- OCPD Size : Std-200A-2P-240VAC — 1 Phase
- OCPD Increase Factor : 160%
- L-L Voltage : 240 VAC — L-N Voltage : 120 VAC
- Current-Carrying Conductors : 2 - 4/0 ga. THHN Copper conductors
- Ground Conductors : 1 - 6 ga. THHN Copper conductor
- Neutral Conductors : 1 - 4/0 ga. THHN Copper conductor

Service Load Characteristics :
- Gross Amperes : 121.63 (A)
- Gross Kilowatts : 23.49 (kW)
- Gross Volt Amperes : 26,692 (VA)
- Gross Kilovolt Amperes : 26.69 (kVA)

Phase Load Balance :
- Phase A : 17.51 kW
- Phase B : 15.89 kW
- Balance Differential Percentage : 9.25%

OCPD Summary : **Service Size Computation Method : Office**

	Line	Neutral	Notes
General Lighting Load :			
Inductive Lighting Load :	1,800.00 VA	1,800.00 VA	1 - circuit(s)
Total Load :	1,800.00 VA	1,800.00 VA	
Total Load with Demand Factor:	**1,800.00 VA**	**1,800.00 VA**	per NEC 220.42, 220.52(A) & (B)
Receptacle Load :			
Continuous Load :	15,615.00 VA	15,615.00 VA	21 - circuit(s)
Total Load :	15,615.00 VA	15,615.00 VA	
Total Load with Demand Factor:	**12,807.00 VA**	**12,807.00 VA**	per NEC 220.44
Motor Load :			
Motor Load :	3.25 VA	3.25 VA	2 - circuit(s)
25% of Largest Motor* :	1,598.57 VA	1,598.57 VA	per NEC 220.18(A)
Total Load :	**1,601.82 VA**	**1,601.82 VA**	
Environmental Load :			
Heater Load :	10,900.00 VA	10,900.00 VA	8 - circuit(s)
A/C Load :	9,591.43 VA	9,591.43 VA	2 - circuit(s)
Applied Load:	**10,900.00 VA**	**10,900.00 VA**	NEC 220.60
Totals :	**27,109.00 VA** **122.00 A**	**27,109.00 VA** **122.00 A**	

* Largest motor load is derived from CU-1

Items not included in panel load summary computations :
1. AHU-2 - 240 VAC, 1Ø, 20.83 A
2. AHU-1 - 240 VAC, 1Ø, 37.50 A

Ampacity Formula
The total load in amperes is computed from the summation of each item utilizing the following formula:
Amperes = (item kW * 1000) / (panel Voltage * item power factor * item efficiency factor * square root of the panel phase)

Reprinted with permission from NFPA 70 2008, NEC copyright © 2008, National Fire Protection Association. This is not the complete and official position of the NFPA on the referenced subject which is represented only by the standard in its entirety. The title National Electric Code and the acronym NEC are registered trademarks of the National Fire Protection Association(NFPA).

STATE OF TEXAS — JANET MURRAY HOFFMAN — 102117 — LICENSED PROFESSIONAL ENGINEER

The seal appearing on this document was authorized by JANET MURRAY HOFFMAN P.E. 102117 8/10/2018

Low Voltage Momentary Short Circuit Analysis Report
Per Unit Method - IEEE Standards 141, 242

Monday, Sep. 25, 2017

Supplied Information and Base Values

Utility Co.: UTILITY	Utility Line Starting Power: 1,000 MVA
XFMR Type: Single Phase	Base Line Voltage: 13.2 kV
75 kVA, 1Ø, 60Hz	Base Transformer Power: 75 kVA
Voltages: 13,200V pri / 240V sec	Base XR Ratio: 1.8
Impedance: 1.2%	Cables' Resistence (R) Computed At: 25ºC
Tolerance: 7.5%	Available Fault L-L: 28.153 kA
XR Ratio: 1.8	Available Fault L-G: 20 kA

			Maximum Fault Amperes		Protection Values	
Item Name	Ø	Voltage	Symmetrical	Asymmetrical	OCPD Type	Duty Amperes
• **LA**	1	240	10,456.5	10,856.7	LVPCB MCCB 10-20 kA MCCB > 20 kA	10,456.5 14,430 15,998.4
AHU-1	1	240	2,011.9	2,014.8	LVPCB MCCB 10-20 kA MCCB > 20 kA	2,011.9 2,776.4 3,078.2
AHU-2	1	240	1,364.7	1,365.6	LVPCB MCCB 10-20 kA MCCB > 20 kA	1,364.7 1,883.3 2,088.1
CU-1	1	240	3,542.4	3,558.2	LVPCB MCCB 10-20 kA MCCB > 20 kA	3,542.4 4,888.5 5,419.9
CU-2	1	240	1,609.3	1,610.8	LVPCB MCCB 10-20 kA MCCB > 20 kA	1,609.3 2,220.8 2,462.2
EHW-1	1	240	902	902.3	LVPCB MCCB 10-20 kA MCCB > 20 kA	902 1,244.8 1,380.1
IHW KITCHEN	1	120	471.3	471.4	LVPCB MCCB 10-20 kA MCCB > 20 kA	471.3 650.5 721.2
MEDICAL IHW SINK	1	120	471.3	471.4	LVPCB MCCB 10-20 kA MCCB > 20 kA	471.3 650.5 721.2
IHW BATH	1	120	471.3	471.4	LVPCB MCCB 10-20 kA MCCB > 20 kA	471.3 650.5 721.2
SPARE	1	120	471.3	471.4	LVPCB MCCB 10-20 kA MCCB > 20 kA	471.3 650.5 721.2
HAND DRYER	1	120	471.3	471.4	LVPCB MCCB 10-20 kA MCCB > 20 kA	471.3 650.5 721.2
HAND DRYER	1	120	471.3	471.4	LVPCB MCCB 10-20 kA MCCB > 20 kA	471.3 650.5 721.2
HAND DRYER	1	120	471.3	471.4	LVPCB MCCB 10-20 kA MCCB > 20 kA	471.3 650.5 721.2

Low Voltage Momentary Short Circuit Analysis Report
Per Unit Method - IEEE Standards 141, 242

Monday, Sep. 25, 2017

			Maximum Fault Amperes		Protection Values	
Item Name	Ø	Voltage	Symmetrical	Asymmetrical	OCPD Type	Duty Amperes
HAND DRYER	1	120	471.3	471.4	LVPCB MCCB 10-20 kA MCCB > 20 kA	471.3 650.5 721.2
EF-2	1	120	1,542	1,543.3	LVPCB MCCB 10-20 kA MCCB > 20 kA	1,542 2,128 2,359.3
EMERGENCY LTS (NON MEDICAL)	1	120	471.3	471.4	LVPCB MCCB 10-20 kA MCCB > 20 kA	471.3 650.5 721.2
LTS	1	120	471.3	471.4	LVPCB MCCB 10-20 kA MCCB > 20 kA	471.3 650.5 721.2
LTS	1	120	471.3	471.4	LVPCB MCCB 10-20 kA MCCB > 20 kA	471.3 650.5 721.2
LTS	1	120	471.3	471.4	LVPCB MCCB 10-20 kA MCCB > 20 kA	471.3 650.5 721.2
LTS	1	120	471.3	471.4	LVPCB MCCB 10-20 kA MCCB > 20 kA	471.3 650.5 721.2
LTS	1	120	471.3	471.4	LVPCB MCCB 10-20 kA MCCB > 20 kA	471.3 650.5 721.2
LTS	1	120	471.3	471.4	LVPCB MCCB 10-20 kA MCCB > 20 kA	471.3 650.5 721.2
LTS	1	120	471.3	471.4	LVPCB MCCB 10-20 kA MCCB > 20 kA	471.3 650.5 721.2
MEDICAL LTS	1	120	471.3	471.4	LVPCB MCCB 10-20 kA MCCB > 20 kA	471.3 650.5 721.2
RCPT TIMERS	1	120	471.3	471.4	LVPCB MCCB 10-20 kA MCCB > 20 kA	471.3 650.5 721.2
TRACK LTS	1	120	471.3	471.4	LVPCB MCCB 10-20 kA MCCB > 20 kA	471.3 650.5 721.2
MEDICAL RCPT	1	120	471.3	471.4	LVPCB MCCB 10-20 kA MCCB > 20 kA	471.3 650.5 721.2
RCPT	1	120	471.3	471.4	LVPCB MCCB 10-20 kA MCCB > 20 kA	471.3 650.5 721.2
RCPT	1	120	471.3	471.4	LVPCB MCCB 10-20 kA MCCB > 20 kA	471.3 650.5 721.2

Low Voltage Momentary Short Circuit Analysis Report
Per Unit Method - IEEE Standards 141, 242

Monday, Sep. 25, 2017

			Maximum Fault Amperes		Protection Values	
Item Name	Ø	Voltage	Symmetrical	Asymmetrical	OCPD Type	Duty Amperes
RCPT	1	120	471.3	471.4	LVPCB MCCB 10-20 kA MCCB > 20 kA	471.3 650.5 721.2
RCPT	1	120	471.3	471.4	LVPCB MCCB 10-20 kA MCCB > 20 kA	471.3 650.5 721.2
RCPT	1	120	471.3	471.4	LVPCB MCCB 10-20 kA MCCB > 20 kA	471.3 650.5 721.2
RCPT	1	120	471.3	471.4	LVPCB MCCB 10-20 kA MCCB > 20 kA	471.3 650.5 721.2
RCPT	1	120	471.3	471.4	LVPCB MCCB 10-20 kA MCCB > 20 kA	471.3 650.5 721.2
GRINDER	1	240	1,542	1,543.3	LVPCB MCCB 10-20 kA MCCB > 20 kA	1,542 2,128 2,359.3
RCPT	1	120	471.3	471.4	LVPCB MCCB 10-20 kA MCCB > 20 kA	471.3 650.5 721.2
RCPT	1	120	471.3	471.4	LVPCB MCCB 10-20 kA MCCB > 20 kA	471.3 650.5 721.2

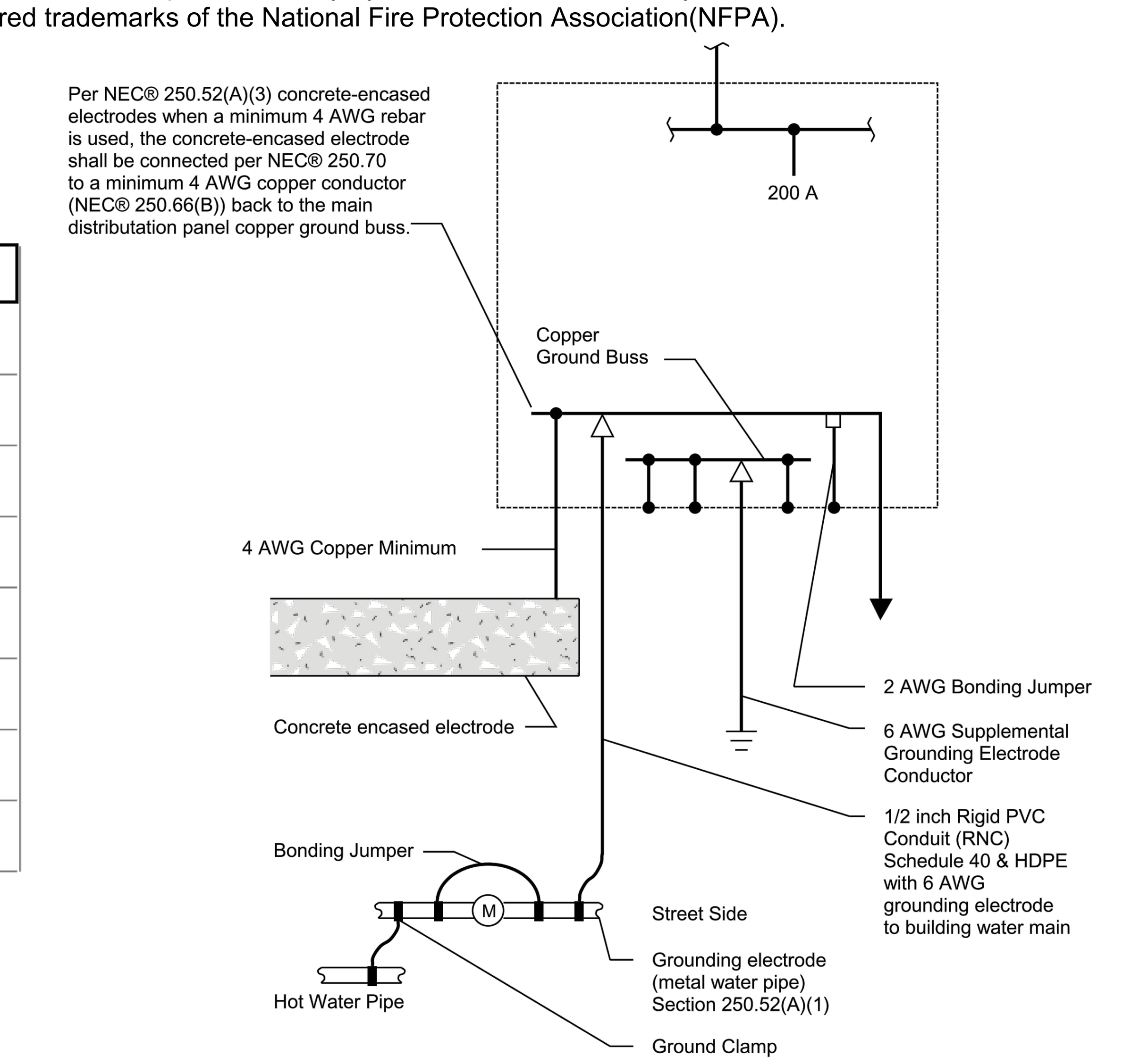

GALVESTON COUNTY
BEACH PAVILION
CRYSTAL BEACH, TX 77650

BE-Arc LLC Project No : C-13-007.01

Ibis Engineering
REG # F-11156
P.O. Box 55171
Galveston, Texas 77555
PH 409.621.6740
THIS PRINT IS THE PROPERTY OF IBIS ENGINEERING IT MUST NOT BE TRACED OR REPRODUCED IN ANY MANNER NOR SHALL IT BE SUBMITTED WITHOUT PRIOR WRITTEN CONSENT FROM IBIS ENGINEERING.

easterwood ARCHITECTS STUDIO
409-354-8976
EASTERWOOD@BE-ARC.COM
2328 BALL STREET
GALVESTON TEXAS 77550

DATE	REVISION

BID SET

DATE ISSUED: 8/10/2018

COPYRIGHT 2018

E2.0

COUNTY APPROVAL:
SIGNATURE _____ DATE_____

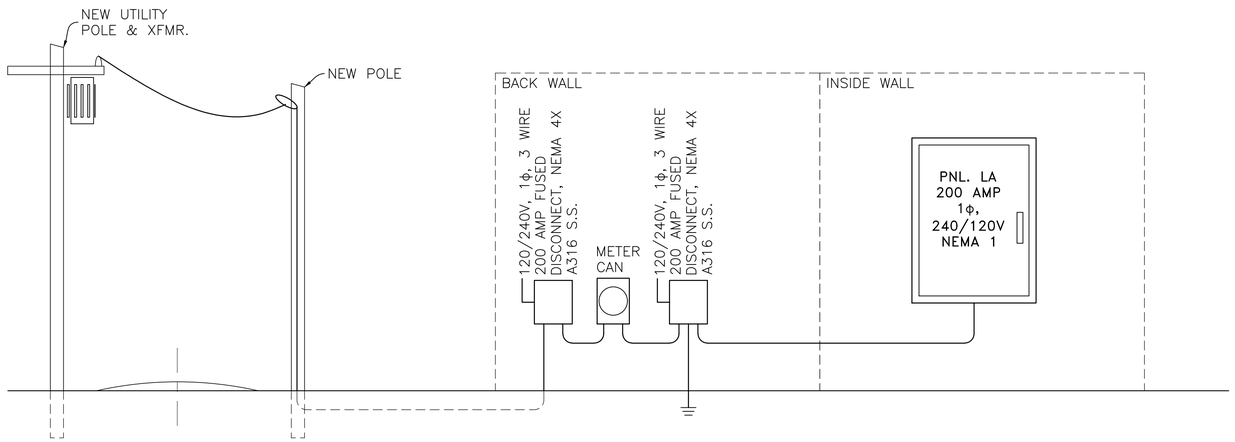

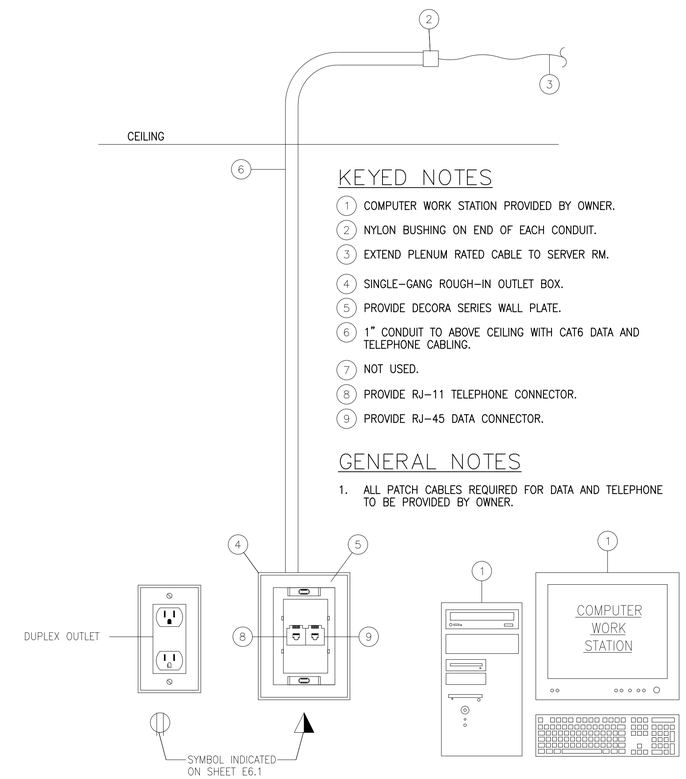

KEYED NOTES

1. COMPUTER WORK STATION PROVIDED BY OWNER.
2. NYLON BUSHING ON END OF EACH CONDUIT.
3. EXTEND PLENUM RATED CABLE TO SERVER RM.
4. SINGLE-GANG ROUGH-IN OUTLET BOX.
5. PROVIDE DECORA SERIES WALL PLATE.
6. 1" CONDUIT TO ABOVE CEILING WITH CAT6 DATA AND TELEPHONE CABLING.
7. NOT USED.
8. PROVIDE RJ-11 TELEPHONE CONNECTOR.
9. PROVIDE RJ-45 DATA CONNECTOR.

GENERAL NOTES

1. ALL PATCH CABLES REQUIRED FOR DATA AND TELEPHONE TO BE PROVIDED BY OWNER.

STATE OF TEXAS
JANET MURRAY HOFFMAN
102117
LICENSED
PROFESSIONAL ENGINEER

The seal appearing on this document was authorized by JANET MURRAY HOFFMAN P.E. 102117 8/10/2018

GALVESTON COUNTY
BEACH PAVILION
CRYSTAL BEACH, TX 77650

BE-Arc LLC Project No : C-13-007.01

bis Engineering
REG # F-11156
P.O. Box 457?
Gonzales, Texas 77655
PH 409.621.6740

THIS PRINT IS THE PROPERTY OF BIS ENGINEERING AND MAY NOT BE USED OR REPRODUCED IN ANY MANNER NOR PRINTED IN WHOLE OR IN PART WITHOUT PRIOR WRITTEN CONSENT FROM BIS ENGINEERING.

easterwood
ARCHITECTS STUDIO
409-354-8976
EASTERWOOD@BE-ARC.COM
2328 BALL STREET
GALVESTON TEXAS 77550

DATE	REVISION

BID SET

DATE ISSUED:
8/10/2018

COPYRIGHT 2018

E2.1

ELECTRICAL SPECIFICATIONS

ELECTRICAL CONDUCTORS

A. MANUFACTURERS: SUBJECT TO COMPLICANCE W/ REQUIREMENTS, PROVIDE BY ONE OF THE FOLLOWING:

ALCAN PRODUCTS CORPORATION; ALCAN CABE DIVISION.

AMERICAN INSULATED WIRE CORP.; A LEVITON COMPANY.

GENERAL CABLE CORPORATION.

SENATOR WIRE & CABLE COMPANY.

SOUTHWIRE COMPANY.

COPER CONDUCTORS: COMPLY W/ NEMA WC 70.

CONDUCTOR INSULATION: COMPLY W/ NEMA WC 70 FOR TYPES THW, THHN-THWN, XHHW, UF, USE, AND SO.

MULTICONDUCTOR CABE: COMPLY W/ NEMA WC 70 FOR ARMORED CABLE, TYPE AC,METAL-CLAD CABLE, TYPE MC, TYPE SO, AND TYPE USE W; FROUND WIRE.

B. CONDUCTOR MATERIAL APPLICATIONS:

COPPER. SOLID FOR NO. 10 AWG AND SMALLER; STRANDED FOR NO. 8 & LARGER.

C. CONDUCTOR INSULATION & MULTICONDUCTOR CABLE APPLICATIONS & WIRING METHODS

1. SERVICE ENTRANCE: TYPE THHN-THWN, SINGLE CONDUCTORS IN RACEWAY, TYPE SE OR USE MULTICONDUCTOR CABLE.
2. EXPOSED FEEDERS: TYPE THHN-THWN, SINGE CONDUCTORS IN RACEWAY.
3. FEEDERS CONCEALED IN CEILING, WALLS, PARTITIONS, & CRAWLSPACES: TYPE THHN-THWN, SINGLE CONDUCTORS IN RACEWAY.
4. FEEDER CONCEALED IN CONCRETE, BELOW SLABS-ON GRADE, & UNDERGROUND: TYPE THHN-THWN, SINGLE CONDUCTORS IN RACEWAY.
5. FEEDERS INSTALLED BELOW RAISED FLOORING: TYPE THHN-THWN, SINGLE CONDUCTORS IN RACEWAY.
6. EXPOSED BRANCH CIRCUITS, INCLUDING IN CRAWLSPACES: TYPE THHN-THWN, SINGLE CONDUCTORS IN RACEWAY, METAL-CLAD CABLE, TYPE MC.
7. BRANCH CIRCUITS CONCEALED IN CEILINGS, WALLS, & PARTITIONS: TYPE THHN-THWN, SINGLE CONDUCTORS IN RACEWAY, ARMORED CABLE, TYPE AC, METAL-CLAD CABLE, TYPE MC.
8. BRANCH CIRCUITS CONCEALED IN CONCRETE, BELW SLABS-ON-GRADE, & UNDERGROUND: TYPE THHN-THWN, SINGLE CONDUCTORS IN RACEWAY.
9. BRANCH CIRCUITS INSTALLED BELOW RAISED FLOORING: TYPE THHN-THWN, SINGLE CONDUCTORS IN RACEWAY OR ARMORED CABLE, TYPE AC, METAL-CLAD CABLE, TYPE MC.
10. BRANCH CIRCUITS INSTALLED IN PATIENT CARE AREAS: TYPE HCF-MCAP OR AC-HCF W/ ASSEMBLY CERTIFIED AS AN EQUIPMENT GROUNDING CONDUCTOR & A GREEN INSULATED EQUIPMENT GROUNDING CONDUCTOR CONNECTED TO ALL RECEPTABLES, METALLIC BOXES CONTAINING RECEPTACLES, & ALL METALLIC EQUIPMENT CASINGS.

GROUNDING

A. INSULATED CONDUCTORS: COPPER WIRE OR CABLE INSULATED FOR 600 V UNLESS OTHERWISE REQUIRED BY APPLICABLE CODE OR AUTHORITIES HAVING JURISDICTION.

B. BARE COPPER CONDUCTORS:

1. SOLID CONDUCTORS: ASTM B 3.
2. STRANDED CONDUCTORS: ASTM B 8.
3. BONDING CABLE: 28 KCMIL, 14 STRANDS OF NO. 17 AWG CONDUCTOR, ¼ INCH (6 MM) IN DIAMETER.
4. BONDING CONDUCTOR: MO 4 OR NO. 6 AWG, STRANDED CONDUCTOR.
5. BONDING JUMPER: COPPER TAPE, BRAIDED CONDUCTORS TERMINATED W/ COPPER FERRULES; 1-5/8 INCHES (41 MM) WIDE & 1/16 INCH (1.6 MM) THICK.

C. GROUNDING BUS: PREDRILLED RECTANGULAR BARS OF ANNEALED COPPER, ¼ BY 4 INCHES (6.3 BY 100 MM) IN CROSS SECTION, W/ 9/32 INCH (7.14-MM) HOLES SPACED 1⅛ INCHES (28 MM) APART. STAND-OFF INSULATORS FOR MOUNTING SHALL COMPLY W/ UL 891 FOR USE IN SWITCHBOARDS, 600 V. LEXAN, IMPULSE TESTED AT 5000 V.

D. CONNECTORS: LISTED & LABELED BY AN NRTL ACCEPTBLE TO AUTHORITIES HAVING JURISDICTION FOR APPLICATIONS IN WHICH USED & SPECIDIC TYPES, SIZES, & COMBINATIONS OF CONDUCTORS & OTHER ITEMS CONNECTED.

E. BOLTED CONNECTORS FOR CONDUCTORS & PIPES: COPPER OR COPPER ALLOY, PRESSURE TYPE W/ AT LEAST TWO BOLTS. PIPE CONNECTORS: CLAMP TYPE, SIZED FOR PIPE.

F. WELDED CONNECTORS: EXOTHERMIC-WELDING JITS OF TYPES RECOMMENDED BY KIT MANUFACTURER FOR MATERIALS BEING JOINED & INSTALLATION CONDITIONS.

G. BUS-BAR CONNECTORS: MECHANICAL TYPE, CAST SILICON BRONZE, SOLDERLESS COMPRESSION-TYPE WIRE TERMINALS, & LONG-BARREL, TWO-BOLT CONNECTION TO GROUND BUS BAR.

H. CONDUCTORS: INSTALL SOLID CONDUCTOR FOR NO. 8 AWG & SMALLER, & STRANDED CONDUCTORS FOR 6 AWG & LARGER UNLESS OTHERWSE INDICATED.

I. ISOLATED GROUNDING CONDUCTORS: GREEN-COLORED INSULATION W/ CONTINUOUS YELLOW STIPE, ON FEEDERS W/ ISOLATED GROUND, IDENTIFY GROUNDING CONDUCTOR WHERE VISIBLE TO NORMAL INSPECTION, W/ ALTERNATING BANDS OF GREEN & YELLOW TAPE, W/ AT LEAST THREE BANDS OF GREEN & TWO BANDS OF YELLOW.

J. CONDUCTOR TEMINATIONS & CONNECTIONS:
PIPE & EQUIPMENT GROUNDING CONDUCTOR TERMINATIONS: BOLTED CONNECTORS. UNDERGROUND CONNECTIONS: WELDED CONNECTIONS: WELDED CONNECTORS EXCEPT AT TEST WELLS & AS OTHERWISE INDICATED, CONNECTIONS TO GROUND RODS AT TEST WELLS: BOLTED CONNECTORS, CONNECTIONS TO STRUCTURAL STEEL: WELDED CONNECTORS.

K. EQUIPMENTT GROUNDING:
INSTALL INSULATED EQUIPMENT GROUNDING CONDUCTORS TO COMPLY W/ THE NEC & AS INDICATED ON THE DRAWINGS.

ELECTICAL HANGERS & SUPPORTS

A. COMPLY W/ NECA 1 & NECA 101 FOR APPLICATION OF HANGERS & SUPPORTS FOR ELECTRICAL & SYSTEMS EXCEPT IF REQUIREMENTS IN THIS SECTION ARE STRICTER, MAXIMUM SUPPORT SPACING & MINIMUM HANGER ROD SIZE FOR RACEWAY: SPACE SUPPORTS FOR EMT, IMC, & RMC AS SCHEDULED IN NECA 1, WHERE ITS TABLE 1 LISTS MAXIMUM SPACINGS LESS THAN STATED IN NFPA 70. MINIMUM ROD SIZE SHALL BE ¼ INCH (6 MM) IN DIAMETER, MULTIPLE RACEWAYS OR CABLES: INSTALL TRAPEZE-TYPE SUPPORTS FABRICATED W/ STEEL SLOTTED OR OTHER SUPPORT SYSTEM, SIZED SO CAPACITY CAN BE INCREASED BY AT LEAST 25 PERCENT IN FUTURE WITHOUT EXCEEDING SPECIFIED DESIGN LOAD KIMITS. SECURE RACEWAYS & CABLES TO THESE SUPPORTS W/ TWO-BOLT CONDUIT CPAMPS, SPRING-STEEL CLAMPS DESIGNED FOR SUPPORTING SINGLE CONDUITS WITHOUT BOLTS MAY BE USED FOR 1½ INCH (38-MM) & SMALLED RACWAYS SERVING BRANCH CIRCUITS & COMMUNICATION SYSTEMS ABOVE SUSPENDED CEILINGS & FOR FASTENING RACEWAYS TO TRAPEZE SUPPORTS.

B. SUPPORT INSTALLATION: COMPLY W/ NECA 1 & NECA 101 FOR INSTALLATION REQUIREMENTS EXCEPT AS SPECIFIED IN THIS ARTICALE.

C. RACEWAY SUPPORT METHODS: IN ADDITION TO METHODS DESCRIBED IN NECA 1, EMT, IMC, & RMC MAY BE SUPPORTED BY OPENINGS THROUGH STRUCTURE MEMBERS, AS PERMITTED IN NFPA 70.

D. STRENGTH OF SUPPORT ASSEMBLIES: WHERE NOT INDICATED, SELECT SIZES OF COMPONENTS SO STRENGTH WILL BE ADQUATE TO CARRY PRESENT & FUTURE STATIC LOADS WITHIN SPECIFIED LOADING LIMITS. MINIMUM STATIC DESIGN LOAD USED FOR STRENGTH DETERMINATION SHALL BE WEIGHT OF SUPPORTED COMPONENTS PLUS 200 LB (90 KG).

E. MOUNTING & ANCHORAGE OF SURFACE-MOUNTED EQUIPMENT & COMPONENTS: ANCHOR & FASTEN ELECTRICAL ITEMS & THEIR SUPPORTS TO BUILDING STRUCTURAL ELEMENTS BY THE FOLLOWING METHODS UNLESS OTHERWISE INDICATED BY CODE:

1. TO WOOD: FASTEN W/ LAG SCREWS OR THROUGH BOLTS.
2. TO NEW CONCRETE: BOLT TO CONCRETE INSERTS.
3. TO MASONRY: APPROVED TOGGLE-TYPE BOLTS ON HOLLOW MASONRY UNITS & EXPANSION ANCHOR FASTENERS ON SOLID MASONRY UNITS.
4. TO EXISTING CONCRETE: EXPANSION ANCHOR FASTENERS.
5. INSTEAD OF EXPANSION ANCHORS, POWDER-ACTUATED DRIVEN THEADED STUDS PROVIDED W/ LOCK WASHERS & NUTS MAY BE USED IN EXISTING STANDARD-WEIGHT CONCRETE 4 INCHES (100 MM) THICK OR GREATER. DO NOT USE FOR ANCHORAGE TO LIGHTWEIGHT-AGGREGATE CONCRETE OR FOR SLABS LESS THAN 4 INCHES (100 MM) THICK.
6. TO STEEL: WELDED THREADED STUDS COMPLYING W/ AWS D1.1/D1.1M, W/ LOCK WASHERS & NUTS OR BEAM CLAMPS (MSS TYPE 19, 21, 23, 25, OR 27) COMPLYING W/ MSS SP-69.
7. TO LIGHT STEEL: SHEET METAL SCREWS.
8. DRILL HOLES FOR EXPANSION ANCHORS IN CONCRETE AT LOCATIONS & TO DEPTHS THAT AVOID REINFORCING BARS.

ELECTRICAL CONDUIT

A. METAL CONDUIT & TUBING
MANUFACTURERS: SUBJECT TO COMPLIANCE W/ REQUIREMENTS, PROVIDE PRODUCTS BY ONE OF THE FOLLOWING:

1. AFC CABLE SYSTEMS, INC.
2. ALFLEX INC.
3. ALLIED TYBE & CONDUIT: A TYCO INTERNATIONAL LTD. CO.
4. ANAMET ELECTRICAL, INC.:; ANACONDA METAL HOSE.
5. ELECTRI-FLEX CO.
6. MAVERICK TUBE CORPORATION.
7. O-Z GEDNET; A UNIT OF GENERAL SIGNAL.
8. WHEATLAND TUBE COMPANY.

B. DIGID STEEL CONDUIT: ANSI 080.1.

C. ALUMINUM RIGID CONDUIT: ANSI C80.5.

D. IMC: ANSI C80.6.

E. PVC-COATED STEEL CONDUIT: PVC-COATED RIGID STEEL CONDUIT.

F. COMPLY W/ NEMA RN 1.

G. COATING THICKNESS: 0.040 INCH (1 MM), MINIMUM.

H. EMT: ANSI C80.3.

I. FMC: ZINC-COATED STEEL.

J. LFMC: FLEXBLE STEEL CONDUIT W/ PVC JACKET.

K. FITTINGS FOR CONDUIT (INCLUDING ALL TYPES & FLEXBLE & LIQUID TIGHT), EMT, & CABLE: NEMA FB1; LISTED FOR TYPE & SIZE RACEWAY W/ WHIGH USED, & FOR APPLICATION & ENVIRONMENT IN WHICH INSTALLED.

1. FITTINGS FOR EMT: STEEL SET-SCREW OR COMPRESSION TYPE, DIE-CAST IS NOT ACCEPTABLE.
2. COATING FOR FITTINGS FOR PVC-COATED CONDUIT: MINIMUM THICKNESS, 0.040 INCH (1 MM), W/ OVERLAPPING SLEEVES PROTECTING THREADED JOINTS.

L. JOINT COMPOUND FOR RIGID STEEL CONDUIT OR IMC: LISTED FOR USE IN CABLE CONNECTOR ASSEMBLIES, & COMPUNDED FOR USE TO LUBRICATE & PROTECT THREADED RACEWAY JOINTS FROM CORROSION & ENHANCE THEIR CONDUCTIVITY.

N. BOXES, ENCLOSURES, & CABINETS:
MANUFACTURERS: SUBJECT TO COMPLIANCE W/ REQUIREMENTS, PROVIDE PRODUCTS BY ONE OF THE FOLLOWING:

1. COOPER CROUSE-HINDS; DIV. OF COOPER INDUSTRIES, INC.
2. EGS/ APPLETON ELECTRIC.
3. HOFFMAN.
4. HUBBELL INCRPORATED; KILLARK ELECTRIC MANUFACTURING CO. DIVISION.
5. O-Z/ GEDNEY; A UNIT OF GENERAL SIGNAL.
6. RACO; A HUBBELL COMPANY.
7. ROBROY INDUSTRIES, INC.; ENCLOSURE DIVISION.
8. THOMAS & BETTS CORPORATION.
9. WALKER SYSTEMS, INC.; WIREMOLD COMPANY (THE).

O. SHEET METAL OUTLET & DEVICE BOXES: NEMA OS 1.

P. CAST-METAL OUTLET & DEVICE BOXES: NEMA FB 1, FERROUS ALLOY, TYPE FD, W/ GASKETED COVER.

Q. METAL FLOOR BOXES; CAST METAL, FULLY ADJUSTABLE, RECTANGULAR.

R. SMALL SHEET METAL PULL & JUNCTION BOXES: NEMA OS 1.

S. CAST-METAL ACCESS, PULL, & JUNCTION BOXES: NEMA FB 1, GALVANIZED, CAST IRON W/ GASKETED COVER.

T. HINGED-COVER ENCLOSURES: NEMA 250, TYPE 1, W/ CONTINUOUS-HINGE COVER W/ FLUSH LATCH, UNLESS OTHERWIRE INDICATED.

1. METAL ELCLOSURES: STEEL, FINISHED INSIDE & OUT W/ MANUFACTURER'S STANDARD ENAMEL.

A. IN STANDARD PARTITIONS, WHERE ½" & ¾" CONDUITS ARE EMPLOYED: 4" SQUARE BY 2⅛" DEEP BOXES W/ 1-GANG PLASTER COVERS SHALL BE USED, NO. 4SD-SPL.

B. IN THIN PARTITIONS MEASURING 3½" OR LESS: 4" SQUARE BY 1½" DEEP BOXES W/ 1-GANG OR 2-GANG PLASTER COVERS BE USED, NO. 4S-SPL.

C. IN STANDARD PARTITIONS, WHERE CONDUITS OF A SIZE GREATER THAN ¾" ARE EMPLOYED: 4" SQUARE BY 2⅛" DEEP BOXES W/ 1-GANG OF 2-GANG PLASTER COVERS SHALL BE USED, NO. 4SJD SERIES. THE OUTLET BOXES SHALL BE LOCATED WHEREBY NO. TWO (2) OUTLET BOXES ARE INSTALLED CLOSER THAN 24" ON CENTER, & SECURELY ATTACHED TO THE PARTITION STUDS, W/ AT LEAST ONE (1) PARITITION STUD SEPARATING THE OUTLET BOXES. IT IS NOT ACCEPTABLE TO SECURE OUTLET BOXES ONLY TO DRYWALL PARTITION.

U. CABINETS:

1. NEMA 250, TYPE 1, GALVANIZED-STEEL BOX W/ REMOVABLE INTERIOR PANEL & REMOVABLE FRONT, FINISHED INSIDE & OUT W/ MANUFACTURER'S STANDARD ENAMEL.
2. HINGED DOOR IN FRONT COVER W/ FLUSH LATCH & CONCEALED HINGE.
3. KEY LATCH TO MATCH PANELBOARDS.
4. METAL BARRIERS TO SEPARATE WIRING OF DIFFERENT SYSTEMS & VOLTAGE.
5. ACCESSORY FEET WHERE REQUIRED FOR FREESTANDING EQUIPMENT.

V. RACEWAY APPLICATION:
OUTDOORS: APPLY RACEWAY PRODUCTS AS SPECIFIED BELOW, UNLESS OTHERWISE INDICATED:

1. EXPOSED CONDUIT: RIGID STEEL CONDUIT.
2. CONCEALED CONDUIT, ABOVEGROUND: RIGID STEEL CONDUIT, EMT, RNC.
3. UNDERGROUND CONDUIT: RNC, TYPE EPC-40-PVC, DIRECT BURIED.
4. CONNECTION TO VIBRATING EQUIPMENT (INCLUDING TRANSFORMERS & HYDRAULIC, PNEUMATIC, ELECTRIC SOLENOID, OR MOTOR-DRIVEN EQUIPMENT): LFMC.
5. BOXES & ENCLOSURES, ABOVEGROUND: NEMA 250, TYPE 3R.

Z. COMPLY W/ THE FOLLOWING INDOOR APPLICATIONS, UNLESS OTHERWISE INDICATED:

1. EXPOSED, NOT SUBJECT TO PHYSICAL DAMAGE: EMT.
2. EXPOSED, NOT SUBJECT TO SEVERE PHYSICAL DAMAGE: EMT.

3. EXPOSED, NOT SUBJECT TO SEVERE PHYSICAL DAMAGE: RIGID STEEL CONDUIT. INCLUDES RACEWAYS IN THE FOLLOWING LOCATIONS: LOADING DOCK, CORRIDORS USED FOR TRAFFIC OR MECHANIZED CARTS, FORKLIFTS, & PALLET-HANDLING UNITS, MECHANICAL ROOMS.

4. CONCEALED IN CEILINGS & INTERIOR WALLS & PARTITIONS: EMT.

5. CONNECTION TO VIBRATING EQUIPMENT (INCLUDING TRANSFORMERS & HYDRAULIC, PNEUMATIC, ELECTRIC SOLENOID, OR MOTOR-DRIVEN EQUIPMENT): FMC, EXCEPT USE LFMC IN DAMP OR WET LOCATIONS.

6. DAMP OF WET LOCATIONS: RIGID STEEL CONDUIT.
7. RACEWAYS FOR OPTICAL FIBER OR COMMUNICATIONS CABE IN SPACES USED FOR ENVIRONMENTAL AIR: PLENUM-TYPE, OPTICAL FIBER/ COMMUNICATIONS CABLE RECEWAY, EMT.
8. RACEWAYS FOR OPTICAL FIBER OR COMMUNICATIONS CABLE RISERS IN VERTICAL SHAFTS: RISER-TYPE, OPTICAL FIBER/ COMMUNICATIONS CABLE RACEWAY, EMT.
9. RACEWAYS FOR CONCEALED GENERAL PURPOSE DISTRIBUTION OF OPTICAL FIBER OR COMMUNICATIONS CABLE: GENERAL-USE, OPTICAL FIBER/ COMMUNICATIONS CABLE RACEWAY, RISER-TYPE, OPTICAL FIBER/ COMMUNICATIONS CABLE RACEWAY, PLENUM-TYPE, OPTICAL FIBER/ COMMUNICATIONS CABLE RACEWAY, EMT.
10. BOXES & ENCLOSURES: NEMA 250, TYPE 1, EXCEPT USE NEMA 250, TYPE 4X, STAINLESS STEEL IN DAMP OR WET LOCATIONS.

AA. MINIMUM RACEWAY SIZE: ½ INCH (16-MM) TRADE SIZE.

AB. RACEWAY FITTINGS: COMPATIBLE W/ RACEWAYS & SUITABLE FOR USE & LOCATION.

1. RIGID & INTERMEDIATE STEEL CONDUIT: USE THREADED RIGID STEEL CONDUIT FITTINGS, UNLESS OTHERWISE INDICATED.
2. PVC EXTERNALLY COATED, RIGID STEEL CONDUITS: USE ONLY FITTINGS LISTED FOR USE W/ THAT MATERIAL. PATCH & SEAL ALL JOINTS, NICKS, & SCRAPES IN PVC W/ THAT MATERIAL. PATCH & SEAL ALL JOINTS, NICKS, & SCRAPES IN PVC COATING AFTER INSTALLING CONDUITS & FITTINGS. USE SEALANT RECOMMENDED BY FITTING MANUFACTURER.

AC. INSTALLATION
COMPLY W/ NECA 1 FOR INSTALLATION REQUIREMENTS APPLICABLE TO PRODUCTS SPECIFIED EXCEPT WHERE REQUIREMENTS ON DRAWINGS OR IN THIS ARTICLE ARE STRICTER.

AD. KEEP RACEWAYS AT LEAST 6 INCHES (150 MM) AWAY FROM PARALLED RUNS OF FLUES & STEAM OR HOT-WATER PIPES. INSTALL HORIZONTAL RACEWAY RUNS ABOVE WATER & STEAM PIPING.

AE. COMPLETE RACEWAY INTALLATION BEFORE STATING CONDUCTOR INSTALLATION.

AF. SUPPORT RACEWAYS AS SPECIFIED IN "HANGERS & SUPPORTS FOR ELECTRICAL SYSTEMS."

AG. ARRANGE STUB-UPS SO CURVED PORTIONS OF BENDS ARE NOT VISIBLE ABOVE THE FINISHED SLAB.

AH. INSTALL NO MORE THAN THE EQUIVALENT OF THREE 90-DEGREE BENDS IN ANY CONDUIT RUN EXCEPT FOR COMMUNICATIONS CONDUITS, FOR WHICH FEWER BENDS ARE ALLOWED.

AI. CONCEAL CONDUIT & EMT WITHIN FINISHED WALLS, CEILINGS, & FLOORS, UNLESS OTHERWISE INDICATED.

AJ. RACEWAYS EMBEDDED IN SLABS:

1. RUN CONDUIT LARGER THAN 1-INCH (27-MM) TRADE SIZE, PARALLED OR AT RIGHT ANGLES TO MAIN REINFORCEMENT. WHERE AT RIGHT ANGLES TO REINFORCEMENT, PLACE CONDUIT CLOSE TO SLAB SUPPORT.
2. ARRANGE RACEWAYS TO CROSS BUILDING EXPANSION JOINTS AT RIGHT ANGLES W/ EXPANSION FITTINGS.
3. CHANGE FROM ENT TO RNC, TYPE EPC-40-PVC, RIGID STEEL CONDUIT, OF IMC BEFORE RISING ABOVE THE FLOOR.

AK. THREADED CONDUIT JOINTS, TEPOSED T WET, DAMP, CORROSIVE, OR OUTDOOR CONDITIONS: APPLY LISTED COMPOUND TO THREADS OF RACEWAY & FITTINGS BEFORE MAKING UP JOINTS. FOLLOW COMPOUND MANUFACTURER'S WRITTEN INSTRUCTIONS.

AL. RACEWAY TERMINATIONS AT LOCATIONS SUBJECT TO MOISTURE OR VIBRATION: USE INSULATING BUSHINGS TO PROTECT CONDUCTORS, INCLUDING CONDUCTORS SMALLER THAN NO. 4 AWG.

AM. INSTALL PULL WIRES IN EMPTY RACEWAYS. USE POLYPROPYLENE OR MONOFILAMENT PLASTIC LINE W/ NOT LESS THAN 200-LB (90-KG) TENSILE STRENGTH. LEAVE AT LEAST 12 INCHES (300 MM) OF SLACK AT EACH END OF PULL WIRE.

AN. RACEWAYS FOR OPTICAL FIBER & COMMUNICATIONS CABLE: INSTALL RACWAYS. METALLIC & NONMETALLIC, RIGID & FLEXIBLE, AS FOLLOW:

1. ¾ INCH (19-MM) TRADE SIZE & SMALLER: INSTALL RACEWAYS IN MAXIMUM LENGTHS OF 50 FEET (15 M).
2. 1-INCH (25-MM) TRADE SIZE & LARGER: INSTALL RACEWAYS IN MAXIMUM LENGTHS OF 75 FEET (23 M).
3. INSTALL W/ A MAXIMUM OF TWO 90-DEGREE BENDS OR EQUIVALENT FOR EACH LENGTH OF RECEWAY UNLESS DRAWINGS SHOW STRICTER REQUIREMENTS. SEPARATE LENGTHS W/ PULL OR JUNCTION BOXES OR TERMINATIONS AT DISTRICUTION FRAMES OR CABINETS WHERE NECESSARY TO COMPLY W/ THESE REQUIREMENTS.

AO. INSTALL RACEWAY SEALING FITTINGS AT SUITABLE, APPROVED, & ACCESSIBLE LOCATIONS & FILL THEM W/ LISTED SEALING COMPOUND. FOR CONCEALED RACEWAYS, INSTALL EACH FITTING IN A FLUSH STEEL BOX W/ A BLANK COVER PLATE HAVING A FINISH SIMLAR T THAT OF ADJACENT PLATES OR SURFACES. INSTALL RACEWAY SEALING FITTINGS AT THE FOLLOWING POINTS:

1. WHERE CONDUITS PASS FROM WARM TO COLD LOCATOINS, SUCH AS BOUNDARIES OF REFRIGERATED SPACES.
2. WHERE OTHERWISE REQUIRED BY NFPA 70.

AP. FLEXIBLE CONDUIT CONNECTIONS: USE MAXMUM OF INCHES (1219 MM) OF FLEXIBLE CONDUIT FOR RECESSED & SEMIRECESSED LIGHTING FIXTURES, EQUIPMENT SUBJECT TO VIBRATION, NOISE TRANSMISSION, OR MOVEMENT; & FOR TRANSFORMERS & MOTORS.

1. USE LFMC IN DAMP OR WET LOCATIONS.

AQ. RECESSED BOXES IN MASONRY WALLS: SAW-CUT OPENING FOR BOX IN CENTER OF CELL OF MASORY BLOCK, & INSTALL BOX FLUSH W/ SURFACE OF WALL.

AR. SET METAL FLOOR BOXES LEVEL & FLUSH W/ FINISHED FLOOR SURFACE.

AS. FIRESTOPPING
APPLY FIRESTOPPING TO ELECTRICAL PENETRATIONS OF FIRE-RATED FLOOR & WALL ASSEMBLIES TO RESTORE ORIGINAL FIRE-RESISTANCE RATING OF ASSEMBLY. PROVIDE SLEEVES FOR FLOOR PENETRATIONS EXTENDING 2" ABOVE FLOOR EXCEPT IN FINISHED AREAS WHERE COORDINATED W/ ARCHITECT.

CONT. ON E3.1

COUNTY APPROVAL:
SIGNATURE ____________________________ DATE_____________

STATE OF TEXAS
JANET MURRAY HOFFMAN
102117
LICENSED PROFESSIONAL ENGINEER

The seal appearing on this document was authorized by
JANET MURRAY HOFFMAN
P.E. 102117
8/10/2018

GALVESTON COUNTY
BEACH PAVILION
CRYSTAL BEACH, TX 77650

BE-Arc LLC Project No : C-13-007.01

Ibis Engineering
REG # F-11156
P.O. Box 55171
Galveston, Texas 77555
PH 409.621.6740

THIS PRINT IS THE PROPERTY OF IBIS ENGINEERING IT MUST NOT BE TRACED OR REPRODUCED IN ANY MANNER NOR SHALL IT BE SUBMITTED WITHOUT PRIOR WRITTEN CONSENT FROM IBIS ENGINEERING.

easterwood
ARCHITECTS STUDIO
409-354-8976
EASTERWOOD@BE-ARC.COM
2328 BALL STREET
GALVESTON TEXAS 77550

DATE	REVISION

BID SET

DATE ISSUED:
8/10/2018

COPYRIGHT 2018

E3.0

ELECTRICAL SPECFICATIONS (CONT.)

PANELBOARDS

A. ENCLOSURES: FLUSH- AND SURFACE-MOUNTED CABINETS. RATED FOR ENVIRONMENTAL CONDITIONS AT INSTALLED LOCATION. INDOOR DRY & CLEAN LOCATIONS: NEMA 250, TYPE 1. OUTDOOR LOCATIONS: NEMA 250, TYPE 3R. WET OR DAMP INDOOR LOCATIONS: NEMA 250, TYPE 4X STAINLESS STEEL.

B. FRONT: SECURED TO BOX W/ CONCEALED TRIM CLAMPS. FOR SURFACE-MOUNTED FRONTS, MATCH BOX DIMENSIONS; FOR FLUSH-MOUNTED FRONTS, OVERLAP BOX.

C. HINGED FRONT COVER: ENTIRE FRONT TRIM HINGED TO BOX & W/ STANDARD DOOR WITHIN HINGED TRIM COVER.

D. FINISHES:
PANELS & TRIM: GALVANIZED STEEL, FACTORY FINISHED IMMEDIATELY AFTER CLEANING & PRETREATING W/ MANUFACTURER'S STANDARD TWO-COAT, BAKED-ON FINISH CONSITSTING OF PRIME COAT & THERMOSETTING TOPCOAT.

E. BACK BOXES: GALVANIZED STEEL.

F. FUNGUS PROOFING: PERMANENT FUNGICIDAL TREATMENT FOR OVERCURRENT PROTECTIVE DEVICES & OTHER COMPONENTS.

G. DIRECTORY CARD: INSIDE PANELBOARD DOOR, MOUNTED IN TRANSPARENT CARD HOLDER.

H. INCOMING MAINS LOCATION: TOP & BOTTOM.

I. PHASE, NEUTRAL & GROUND BUSES:
MATERIAL: HARD-DRAWN COPPER, 98 PERCENT CONDUCTIVITY. EQUIPMENT GROUND BUS: ADEQUATE FOR FEEDER & BRANCH-CIRCUIT EQUIPMENT GROUNDING CONDUCTORS; BONDED TO BOX.

J. CONDUCTOR CONNECTORS: SUITABLE FOR USE W/ CONDUCTOR MATERIAL & SIZES. MATERIAL: HARD-DRAWN COPPER, 98 PERCENT CONDUCTIVITY. MAIN & NEUTRAL LUGS: COMPRESSION TYPE. CROUND LUGS & BUS-CONFIGURED TERMINATORS: COMPRESSION TYPE. FEED-THROUGH LUGS: COMPRESSION TYPE, SUITABLE FOR USE W/ CONDUCTOR MATERIAL. LOCATE AT OPPOSITE END OF BUS FROM INCOMING LUGS OR MAIN DEVICE.

K. PANELBOARD SHORT-CIRCUIT CURRENT RATING: FULLY RATED TO INTERRUPT SYMMETRICAL SHORT-CIRCUIT CURRENT AVAILABLE AT TERMINALS.

L. LIGHTING & APPLIANCE BRANCH-CIRCUIT PANELBOARDS MANUFACTURERS: SUBJECTOT COMPLIANCE W/ REQUIREMENTS, PROVIDE PRODUCTS BY ONE OF THE FOLLOWING:

EATON ELECTRICAL INC.; CUTLER-HAMMER BUSINESS UNIT.

GENERAL ELECTRIC COMPANY; GE CONSUMER & INDUSTRIAL

SIEMENS ENERGY & AUTOMATION, INC.

SQUARE D; A BRAND OF SCHNEIDER ELECTRIC.

PANELBOARDS: NEMA PB 1, LIGHTING & APPLIANCE BRANCH-CIRCUIT TYPE.

MAINS: CIRCUIT BREAKER OR LUGS ONLY.

BRANCH OVERCURRENT PROTECTIVE DEVICES: BOLT-ON CIRCUIT BREAKERS, REPLACEABLE WITHOUT DISTURBING ADJACENT UNITS.

DOORS: CONCEALED HINGES; SECURED W/ FLUSH LATCH W/ TUMBLER LOCK; KEYED ALIKE.

LIGHTING FIXTURES

A. GENERAL REQUIREMENTS FOR LIGHTING FIXTURES & COMPONENTS,

1. RECESSED FIXTURES: COMPLY W/ NEMA LE 4 FOR CEILING COMPATIBILITY FOR RECESSED FIXTURES.

2. INCANDESCENT FIXTURES: COMPLY W/ UL 1598. WHERE LER IS SPECIFIED, TEST ACCORDING TO NEMA LE 5A.

3. FLUORESCENT FIXTURES: COMPLY W/ UL 1598. WHERE LER IS SPECIFIED, TEST ACCORDING TO NEMA LE 5 & NEMA LE 5A AS APPLICABLE.

4. HID FIXTURES: COMPLY W/ UL 1598. WHERE LER IS SPECIFIED, TEST ACCORDING TO NEMA LE 5B.

METAL PARTS: FREE OF BURRS & SHARP CORNERS & EDGES. SHEET METAL COMPONENTS: STEEL UNLESS OTHERWISE INDICATED. FORM & SUPPORT TO PREVENT WARPING & SAGGING. DOORS, FRAMES, & OTHER INTERNAL ACCESS: SMOOTH OPERATING, FREE OF LIGHT LEAKAGE UNDER OPERATING CONDITIONS, & DESIGNED TO PERMIT RELAMPING WITHOUT USE OF TOOLS. DESIGNED TO PREVENT DOORS, FRAMES, LENSES, DIFFUSERS,& OTHER COMPONENTS FROM FALLING ACCIDENTALLY DURING RELAMPING & WHEN SECURED IN OPERATING POSITION.

B. DIFFUSERS & GLOBES:

1. ACRYLIC LIGHTING DIFFUSERS: 100 PERCENT VIRGIN ACRYLIC PLASTIC. HIGH RESISTANCE RADIATION.

2. LENS THICKNESS: AT LEAST 0.125 INCH (3.175 MM) MINIMUM UNLESS OTHERWISE INDICATED.

3. UV STABILIZED.

4. GLASS: ANNEALED CRYSTAL GLASS UNLESS OTHERWISE INDICATED.

C. FACTORY-APPLIED LABELS: COMPLY W/ UL 1598. INCLUDE RECOMMENDED LAMPS & BALLASTS. LABELS SHALL BE LOCATED WHERE THEY WILL BE READILY VISIBLE TO SERVICE PERSONNEL, BUT NOT SEEN FROM NORMAL VIEWING ANGLES WHEN FAMPS ARE IN PLACE. DABEL SHALL INCLUDE THE FOLLOWING LAMP & BALLAST CHARACTERISTICS:

1. "USE ONLY" & INCLUDE SPECIFIC LAMP TYPE.

2. LAMP DIAMETER CODE (T-4, T-5, T-8, T-12, ETC.) TUBE CONFIGURATION (TWIN, QUAD, TRIPLE, ETC.), BASE TYPE, & NOMINAL WATTAGE FOR FLUORESCENT & COMPACT FLUORESCENT LUMINAIRES.

3. LAMP TYPE, WATTAGE, BULB TYPE (ED17, BD56, ETC.) & COATING (CLEAR OR COATED) FOR HID LUMINAIRES.

4. START TYPE (PREHEAT, RAPID START, INSTANT START, ETC.) FOR FLUORESCENT & COMPACT FLUORESCENT LUMINAIRES.

5. ANSI BALLAST TYPE (M98, M57, ETC.) FOR HID LUMINAIRES.

6. CCT & CRI FOR ALL LUMINAIRES.

D. ELECTROMAGNETIC-INTERFERENCE FILTERS: FACTORY INSTALLED TO SUPPRESS CONDUCTED ELECTROMAGNETIC INTERFERENCE AS REQUIRED BY MIL-STD-461E. FABICATE LIGHTING FIXTURES W/ ONE FILTER ON EACH BALLAST INDICATED TO REQUIRE A FILTER.

BALLASTS

A. BALLASTS FOR LINEAR FLUORESCENT LAMPS, GENERAL REQUIREMENTS FOR ELECTRONIC BALLASTS:

1. COMPLY W/ UL 935 AND W/ ANSI C82.11.

2. DESIGNED FOR TYPE AND QUANTITY OF LAMPS SERVED.

3. BALLASTS SHALL BE DESIGNED FOR FULL LIGHT OUTPUT UNLESS ANOTHER BF, DIMMER, OR BI-LEVEL CONTROL IS INDICATED.

4. SOUND RATING: CLASS A.

5. TOTAL HARMONIC DISTORTION RATING: LESS THAN 10 PERCENT.

6. TRANSIENT VOLTAGE PROTECTION: IEEE C62.41.1 AND IEEE C62.41.2, CATEGORY A OR BETTER.

7. OPERATING FREQUENCY: 42 KHZ OR HIGHER.

8. LAMP CURRENT CREST FACTOR: 1.7 OR LESS.

9. BF: .088 OR HIGHER.

10. POWER FACTOR: .95 OR HIGHER.

11. PARALLEL LAMP CIRCUITS: MULTIPLE LAMP BALLASTS SHALL COMPLY W/ ANSI C82.11 AND SHALL BE CONNECTED TO MAINTAIN FULL LIGHT OUTPUT ON SURVIVING LAMPS IF ONE OR MORE LAMPS FAIL.

B. LUMINAIRES CONTROLLED BY OCUPANCY SENSORS SHALL HAVE PROGRAMMED-START BALLASTS.

C. ELECTRONIC PROGRAMMED-START BALLASTS FOR T8 AND T5 AND T5HO LAMPS: COMPLY W/ ANSI C82.11 AND THE FOLLOWING:

1. LAMP END-OF-LIFE DETECTION AND SHUTDOWN CIRCUIT FOR T5 DIAMETER LAMPS.

2. AUTOMATIC LAMP STARTING AFTER LAMP REPLACEMENT.

D. ELECTROMAGNETIC BALLASTS: COMPLY W/ ANSI C82.1; ENERGY SAVING, HIGH-POWER FACTOR, CLASS P, AND HAVING AUTOMATIC-RESET THERMAL PROTECTION.

E. BALLAST MANUFACTURER CERTIFICATION: INDICATED BY LABEL.

F. SINGLE BALLASTS FOR MULTIPLE LIGHTING FIXTURES: FACTORY WIRED W/ BALLAST ARRANGEMENTS AND BUNDLED EXTENSION WIRING TO SUIT FINAL INSTALLATION COMDITIONS WITHOUT MODIFICATION OR REWIRING IN THE FIELD.

G. BALLASTS FOR COMPACT FLUORESCENT LAMPS.

H. DESCRIPTION: ELECTRONIC-PROGRAMMED RAPID-START TYPE, COMPLYING W/ UL 935 AND W/ ANSI C 82.11, DESIGNED FOR TYPE AND QUANTITY OF LAMPS INDICATED. BALLAST SHALL BE DESIGNED FOR FULL LIGHT OUTPUT UNLESS DIMMER OR BI-LEVEL CONTROL IS INDICATED:

1. LAMP END-OF-LIFE DETECTION AND SHUTDOWN CIRCUIT.

2. AUTOMATIC LAMP STARTING ATER LAMP REPLACEMENT.

3. SOUND RATING: CLASS A.

4. TOTAL HARMONIC DISTORTION RATING: LESS THAN 20 PERCENT.

5. TRANSIENT VOLTAGE PROTECTION: IEEE C62.41.1 AND IEEE C62.41.2, CATEGORY A OR BETTER.

6. OPERATING FREQUENCY: 20 KHZ OR HIGHER.

7. LAMP CURRENT CREST FACTOR: 1.7 OR LESS.

8. BF: 0.95 OR HIGHER UNLESS OTHERWISE INDICATED.

9. POWER FACTOR: 0.95 OR HIGHER.

10. INTERFERENCE: COMPLY W/ 47 CFR 18, CH. 1, SUBPART C, FOR LIMITATIONS ON ELECTROMAGNETIC AND RADIO-FREQUENCY INTERFERENCE FOR NONCONSUMER EQUIPMENT.

FLUORESCENT LAMPS

A. T8 RAPID-START LAMPS, RATED 32 W MAXIMUM, NOMINAL LENGTH OF 48 INCHES (1220 MM), 2800 INITIAL LUMENS (MINIMUM), CRI 85 (MINIMUM), COLOR TEMPERATURE 3000 K, AND AVERAGE RATED LIFE 20,000 HOURS UNLESS OTHERWISE INDICATED.

B. T8 RAPID-START LAMPS, RATED 17 W MAXIMUM, NOMINAL LENGTH OF 24 INCHES (610 MM), 1300 INITIAL LUMENS (MINIMUM), CRI 85 (MINIMUM), COLOR TEMPERATURE 3000 K, AND AVERAGE RATED LIFE 20,000 HOURS UNLESS OTHERWISE INDICATED.

C. T5 RAPID-START LAMPS, RATED 28 W MAXIMUM, NOMINAL LENGTH OF 45.2 INCHES (1150 MM), 2900 INITIAL LUMENS (MINIMUM), CRI 85 (MINIMUM), COLOR TEMPERATURE 3000 K, AND AVERAGE RATED LIFE 20,000 HOURS UNLESS OTHERWISE INDICATED.

D. T5HO RAPID-START,HIGH-OUTPUT LAMPS, RATED 54 W MAXIMUM, NOMINAL LENGTH OF 45.2 INCHES (1150 MM), 5000 INITIAL LUMENS (MINIMUM), CRI 85 (MINIMUM), COLOR TEMPERATURE 4100 K, AND AVERAGE RATED LIFE 20,000 HOURS UNLESS OTHERWISE INDICATED.

E. COMPACT FLUORESCENT LAMPS: 4-PIN, CRI 80 (MINIMUM), COLOR TEMPERATURE 3000 K, AND AVERAGE RATED LIFE 10,000 HOURS AT THREE HOURS OPERATION PER START, AND SUITABLE FOR USE W/ DIMMING BALLASTS UNLESS OTHERWISE INDICATED.

1. 13 W: T4, DOUBLE OR TRIPLE TUBE, RATED 900 INTIAL LUMENS (MINIMUM).

2. 18 W: T4, DOUBLE OR TRIPLE TUBE, RATED 1200 INTIAL LUMENS (MINIMUM).

3. 26 W: T4, DOUBLE OR TRIPLE TUBE, RATED 1800 INTIAL LUMENS (MINIMUM).

4. 32 W: T4, TRIPLE TUBE, RATED 2400 INTIAL LUMENS (MINIMUM).

5. 42 W: T4, TRIPLE TUBE, RATED 2400 INTIAL LUMENS (MINIMUM).

6. 57 W: T4, TRIPLE TUBE, RATED 2400 INTIAL LUMENS (MINIMUM).

7. 70 W: T4, TRIPLE TUBE, RATED 2400 INTIAL LUMENS (MINIMUM).

WIRING DEVICES

A. MANUFACTURERS:

1. COOPER WIRING DEVICES;

2. HUBBELL INCORPORATED; WIRING DEVICE-KELLUMS

3. LEVITON MFG. COMPANY INC.

4. PASS & SEYMOUR/ LEGRAND; WIRING DEVICES & ACCESSORIES

B. ALL WIRING DEVICES TO BE WHITE OR COLOR AS SELECTED BY ARCHITECT.

C. STRAIGHT BLADE RECEPTACLES:
CONVENIENCE RECEPTABLES, 125 V, 20 A: COMPLY W/ NEMA WD 1, NEMA WD 6 CONFIGURATION 5-20R, AND UL 498. PRODUCTS: SUBJECT TO COMPLIANCE W/ REQUIREMENT, PROVIDE ONE OF THE FOLLOWING:

1. LEVITON; 16341-W (SINGLE), 16362-W (DUPLEX).

2. ANY EQUAL BY ABOVE LISTED MANUFACTURERS.

D. ISOLATED-GROUND, DUPLEX CONVENIENCE RECEPTACLES, 125 V, 20 A: COMPLY W/ NEMA WD 1, NEMA WD 6 CONFIGURATION 5-20R, AND UL 498. PRODUCTS: SUBJECT TO COMPLIANCE W/ REQUIREMENTS, PROVIDE ONE OF THE FOLLOWING:

3. LEVITON; 16362-IGW.

4. ANY EQUAL BY ABOVE LISTED MANUFACTURERS.

DESCRIPTION: STRAIGHT BLADE; EQUIPMENT GROUNDING CONTACTS SHALL BE CONNECTED ONLY TO THE GREEN GROUNDING SCREW TERMINAL OF THE DEVICE AND W/ INHERENT ELECTRICAL ISOLATION FROM MOUNTING STRAP. ISOLATION SHALL BE INTERGRAL TO RECEPTACLE CONSTRUCTION AND NOT DEENDENT ON REMOVABLE PARTS.

E. GFCI RECEPTACLES
GENERAL DESCRIPTION: STRAIGHT BLADE, FEED-THROUGH TYPE. COMPLY W/ NEMA WD 1, NEMA WD 6, UL 498, AND UL 943, CLASS A, AND INCLUDE INICATOR LIGHT THAT IS LIGHTED WHEN DEVICE IS TRIPPED, DUPLEX GFCI CONVENIENCE RECEPTACLES, 125 V, 20 A: PRODUCTS: SUBJECT TO COMPLIANCE W/ REQUIREMENTS, PROVIDE ONE OF THE FOLLOWING:

1. LEVITON: 7899-W.

2. ANY EQUAL BY ABOVE LISTED MANUFACTURERS.

F. SNAP SWITCHES, COMPLY W/ NEMA WD 1 AND UL 20. SWITCHES, 120/277 V, 20 A: PRODUCTS: SUBJECT TO COMPLIANCE W/ REQUIREMENTS, PROVIDE ONE OF THE FOLLOWING:

1. LEVITON; 5621-2W (SINGLE POLE), 5622-2 (TWO POLE), 5623-2 (THREE WAY)

2. ANY EQUAL BY ABOVE LISTED MANUFACTURERS.

H. WALL-BOX DIMMERS, DIMMER SWITCHES: MODULAR, FULL-WAVE, SOLID-STATE UNITS W/ INTERGRAL, QUIET ON-OFF SWITCHES, W/ AUDIBLE FREQUENCY AND EMI/RFI SUPPRESION FILTERS, CONTROL: CONTINUOUSLY ADJUSTABLE SLIDER; W/ SINGLE-POLE OR THREE-WAY SWITCHING, COMPLY W/ UL 1472.

1. INCANESCENT LAMP DIMMERS: 120 V; CONTROL SHALL FOLLOW SQUARE-LAW DIMMING SHALL REQUIRE NO DERATING WHEN GANGED W/ OTHER DEVICES.

2. FLUORESCENT LAMP DIMMER SWITCHES: MODULAR; COMPATIBLE W/ DIMMER BALLASTS; TRIM POTENTIOMETER TO ADJUST LOW-END DIMMING; DIMMER-BALLAST COMBINATION CAPABLE OF CONSISTENT DIMMING W/ LOW END NOT GREATER THAN 20 PERCENT OF FULL BRIGHTNESS.

3. ACCEPTABLE MANUFACTURERS: LEVITON, LUTRON.

I. OCCUPANCY SENSORS, WALL-SWITCH SENSORS: SUBJECT TO COMPLIANCE W/ REQUIREMENTS, PROVIDE ONE OF THE FOLLOWING:

1. LEVITON; ODS15-IDW.

2. ANY EQUAL BY NOVITAS, WATTSTOPPER OR SENSOR SWITCH.

DESCRIPTION: PASSIVE-INFRARED TYPE, 120/277 V, ADJUSTABLE TIME DELAY UP TO 20 MINUTES, 180-DEGREE FIELD OF VIEW, W/ A MINIMUM CONVERAGE AREA OF 1800 SQ.FT. (167 SQ.M).

K. WALL PLATES, SINGLE AND COMBINATION TYPES TO MATCH CORRESPONDING WIRING DEVICES. PLATE-SECURING SCREW: METAL W/ HEAD COLOR TO MATCH PLATE FINISH.

1. MATERIAL FOR FINISHED SPACES: SMOOTH, HIGH-IMPACT THERMOPLASTIC 0.035-INCH-(1-MM) THICK.

2. MATERIAL FOR UNFINISHED SPACES: SMOOTH, HIGH-IMPACT THERMOPLASTIC.

3. MATERIAL FOR DAMP LOCATIONS: THERMOPLASTIC W/ SPRING-LOADED LIFT COVER, AND LISTED AND LABELED FOR USE IN "WET LOCATIONS."

4. WET-LOCATION, WEATHERPROOF COVER PLATES: NEMA 250, COMPLYING W/ TYPE 3R WEATHER-RESISTANT, THERMOPLASTIC W/ LOCKABLE COVER.

DEVICE MOUNTING HEIGHTS

IN GENERAL, UNLESS OTHERWISE NOTED ON THE ARCHITECTURAL DRAWINGS OR TH ELECTRICAL DRAWINGS, MOUNTING SHALL BE AS FOLLOWS: (HEIGHTS SHOWN ARE ABOVE FINISHED FLOOR TO CENTER LINE OF OUTLET).

WALL SWITCHES	48 INCHES
ELECTRICAL, VOICE/ DATA OUTLETS	18 INCHES
CLOCK OUTLETS	90 INCHES
RECEPTACLES (MOUNTED ABOVE A COUNTER)	42 INCHES
FIRE ALARM PULL STATIONS	42 INCHES
FIRE ALARM SYSTEM AUDIO/ VISUAL STROBES	80 INCHES
FIRE ALARM SYSTEM VISUAL STROBES	80 INCHES
WALL MOUNTED TELEPHONE	42 INCHES

COUNTY APPROVAL:
SIGNATURE______________________________ DATE______________

STATE OF TEXAS
JANET MURRAY HOFFMAN
102117
LICENSED
PROFESSIONAL ENGINEER

The seal appearing on this document was authorized by
JANET MURRAY HOFFMAN
P.E. 102117
8/10/2018

GALVESTON COUNTY
BEACH PAVILION
CRYSTAL BEACH, TX 77650

BE-Arc LLC Project No : C-13-007.01

Ibis Engineering
REG # F-11156
P.O. Box 55171
Galveston, Texas 77555
PH 409.621.6740

THIS PRINT IS THE PROPERTY OF IBIS ENGINEERING IT MUST NOT BE TRACED OR REPRODUCED IN ANY MANNER NOR SHALL IT BE SUBMITTED WITHOUT PRIOR WRITTEN CONSENT FROM IBIS ENGINEERING.

easterwood
ARCHITECTS STUDIO
409-354-8976
EASTERWOOD@BE-ARC.COM
2328 BALL STREET
GALVESTON TEXAS 77550

DATE	REVISION

BID SET

DATE ISSUED:
8/10/2018

COPYRIGHT 2018

E3.1

UQU-31344
Quarter 1

Surface

LT-1A

LIGMAN LIGHTING USA

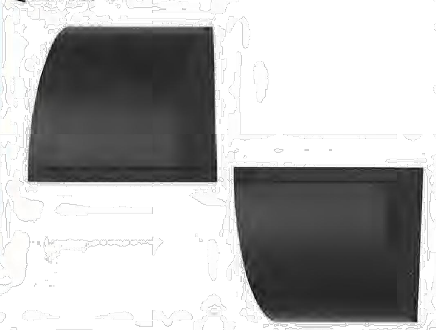

A small size quarter-cylindrical wall mounted luminaire with a selection of precision optics providing type II, III & IV light distributions for optimum spacing and perfect uniformity between light fixtures. This light fixture has vandal proof tempered glass with specially designed silicon gaskets that allow the fixture to be mounted as an uplight, as well as downlight configurations. Installation is made easy with a die cast aluminum wall mount casting, that is attached to the wall before securing the fixture with a single vandal resistant screw. The lens is available in clear or lightly frosted options to suit customer requirements. Designed for the illumination of entrances, terraces, corridors and building facades. For mounting in upward or downward positions. When installed as a downlight this fixture is Dark Sky compliant.

Physical Data
Length • 8.1"
Height • 8.6"
Weight • 13.2 lbs
IP65 • Suitable For Wet Locations
IK08 • Impact Resistant (Vandal Resistant)

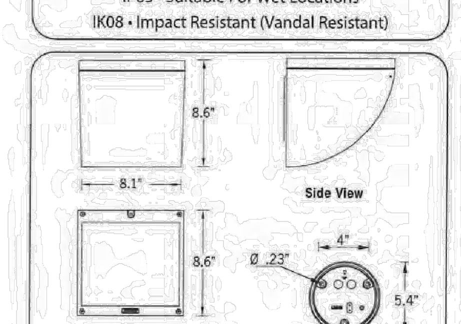

Aluminum Casting
Less than 0.1% copper content – Marine Grade LM6 Aluminum High Pressure die casting provides excellent mechanical strength, clean detailed product lines and excellent heat dissipation.

Pre paint
8 step degrease and phosphate process that includes deoxidizing and etching as well as a zinc and nickel phosphate process before product painting.

Memory Retentive -Silicon Gasket.
Provided with special injection molded **"fit for purpose"** long life high temperature **memory retentive silicon gaskets.** Maintains the gaskets exact profile and seal over years of use and compression.

Thermal management.
LM6 Aluminum is used for its **excellent mechanical strength and thermal dissipation properties** in low and high ambient temperatures. The superior thermal heat sink design by Ligman used in conjunction with the driver, controls thermals below critical temperature range to ensure maximum luminous flux output, as well as providing long LED service life and ensuring less than 10% lumen depreciation at 50,000 hours.

Surge Suppression
Standard 10kv surge suppressor provided with all fixtures.

Finishing
All Ligman products go through an extensive finishing process that includes fettling to improve paint adherence.

Paint.
UV Stabilized 4.9Mil thick powder coat paint and baked at 200 Deg C.
This process ensures that Ligman products can withstand harsh environments.
Rated for use in natatoriums.

Hardware.
Provided Hardware is **Marine grade 316 Stainless steel.**

Anti Seize Screw Holes
Tapped holes are infused with a **special anti seize compound** designed to prevent seizure of threaded connections, due to electrolysis from heat, corrosive atmospheres and moisture.

Crystal Clear Low Iron Glass Lens.
Provided with tempered, impact resistant **crystal clear low iron glass** ensuring no green glass tinge.

Optics & LED
Precise optic design provides **exceptional light control and precise distribution of light.**
LED CRI > 80

Lumen - Maintenance Life
L80 /B10 at 50,000 hours (This means that at least 90% of the LED still achieve 80% of their original flux)

Standard Options

Lamp	Beam	LED Color	Finish Color
40w LED	T2 • Type II Distribution - 3510lm T3 • Type III Distribution - 3591lm T4 • Type IV Distribution - 3624lm	W27 • 2700K W30 • 3000K W40 • 4000K	01 - Black - RAL 9011 02 - Dark Grey - RAL 7043 03 - White - RAL 9003 04 - Metallic Silver - RAL 9006 05 - Matte Silver - RAL 9006 06 - Bronze - RAL 6014 07 - Custom RAL

Extra Options (Consult Factory For Pricing)

Surface Conduit Entry Box	
1/2 • 1/2" Cable Entry 3/4 • 3/4" Cable Entry Additional information needed for conduit specifications	F • Frosted Lens

Ordering Example : UQU - 31344 - 40w - T2 - W30 - 02 - 120/277v - Options

		Lamp	Beam	LED Color	Color	Voltage	Options
UQU	31344	40w LED	T2 Type II Distribution T3 Type III Distribution T4 Type IV Distribution	W27 2700K W30 3000K W40 4000K	01 Black 02 Dark Grey 03 White 04 Metallic Silver 05 Matte Silver 06 Bronze 07 Custom RAL	120/277v Other (Specify)	1/2" 1/2" Conduit Entry 3/4" 3/4" Conduit Entry F Frosted Lens

PROJECT: DATE: QUANTITY:
TYPE: NOTE:

Head Office: 7144 NW Progress Ct Hillsboro, Oregon 97124 Tel: 503-645-0500 Fax: 503-645-8100 www.ligmanlightingusa.com

Ligman Lighting USA reserves the right to change specifications without prior notice, please contact factory for latest information. Due to the continual improvements in LED technology data and components may change without notice.

UTA-31861
Tango 29 Downlight

Surface

LT-2

LIGMAN LIGHTING USA

Wall luminaires with a selection of light distributions and LED wattages with downward light distributions. The Tango is unique as it is available with Type II,III & IV light distribution options that facilitates wider spacing and even light distribution between the light fixtures. Spacings of up to 40' on center, and a 14' mounting height with a 2 fc average can be achieved using the type II optic. This provides higher energy saving and reduced installation costs. The Tango 31 cylindrical or Tango 32 square up-down versions can be manufactured using different type beam distributions for the up and down optics.
Integral electronic control gear.
Mounting plate for 3" and 4" junction box is provided with the fixture. Matching surface mount conduit boxes are available as an option.
Custom round pole adapters can be manufactured to suit specific pole diameters for column mounting applications. Please contact the factory for more information.

For the Square downlight option, see Tango 30.
For type V distributions, see Jet surface wall luminaires.

Physical Data
Length • 7.3"
Height • 10.7"
Weight • 9.7 lbs
IP65 • Suitable For Wet Locations
IK08 • Impact Resistant (Vandal Resistant)

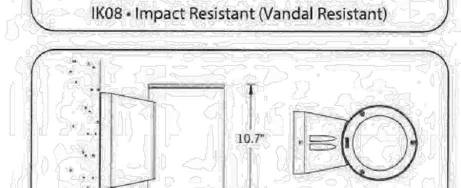

Aluminum Casting
Less than 0.1% copper content – Marine Grade LM6 Aluminum High Pressure die casting provides excellent mechanical strength, clean detailed product lines and excellent heat dissipation.

Pre paint
8 step degrease and phosphate process that includes deoxidizing and etching as well as a zinc and nickel phosphate process before product painting.

Memory Retentive -Silicon Gasket.
Provided with special injection molded **"fit for purpose"** long life high temperature **memory retentive silicon gaskets.** Maintains the gaskets exact profile and seal over years of use and compression.

Thermal management.
LM6 Aluminum is used for its **excellent mechanical strength and thermal dissipation properties** in low and high ambient temperatures. The superior thermal heat sink design by Ligman used in conjunction with the driver, controls thermals below critical temperature range to ensure maximum luminous flux output, as well as providing long LED service life and ensuring less than 10% lumen depreciation at 50,000 hours.

Surge Suppresion
Standard 10kv surge suppresor provided with all fixtures.

BUG Rating
B1 - U0 - G1

Finishing
All Ligman products go through an extensive finishing process that includes fettling to improve paint adherence.

Paint.
UV Stabilized 4.9Mil thick powder coat paint and baked at 200 Deg C.
This process ensures that Ligman products can withstand harsh environments.
Rated for use in natatoriums.

Hardware.
Provided Hardware is **Marine grade 316 Stainless steel.**

Anti Seize Screw Holes
Tapped holes are infused with a **special anti seize compound** designed to prevent seizure of threaded connections, due to electrolysis from heat, corrosive atmospheres and moisture.

Crystal Clear Low Iron Glass Lens.
Provided with tempered, impact resistant **crystal clear low iron glass** ensuring no green glass tinge.

Optics & LED
Precise optic design provides **exceptional light control and precise distribution of light.**
LED CRI > 80

Lumen - Maintenance Life
L80 /B10 at 50,000 hours (This means that at least 90% of the LED still achieve 80% of their original flux)

Standard Options

Lamp	Beam	LED Color	Finish Color
37w LED 28w LED 20w LED	T2 • Type II Distribution - 2706lm T3 • Type III Distribution - 2722lm T4 • Type IV Distribution - 2777lm [lumen output for 37w LED]	W27 • 2700K W30 • 3000K W40 • 4000K (IDA-Dark Sky approved for 2700K & 3000K only)	01 - Black - RAL 9011 02 - Dark Grey - RAL 7043 03 - White - RAL 9003 04 - Metallic Silver - RAL 9006 05 - Matte Silver - RAL 9006 06 - Bronze - RAL 6014 07 - Custom RAL

Options (Consult Factory for Pricing)
- F - Frosted Lens
- EMG - Emergency Battery Pack
- SCE - Custom Surface Conduit Entry Box
- HGT- Specify Custom Height
- NAT- Natatorium & High Salt Environments

Ordering Example : UTA - 31861 - 37w - T2 - W30 - 02 - 120/277v - Options

		Lamp	Beam	LED Color	Color	Voltage	Options
UTA	31861	37w 37w LED 28w 28w LED 20w 20w LED	T2 Type II Distribution T3 Type III Distribution T4 Type IV Distribution	W27 2700K (IDA Approved) W30 3000K (IDA Approved) W40 4000K	01 Black 02 Dark Grey 03 White 04 Metallic Silver 05 Matte Silver 06 Bronze 07 Custom RAL	120/277v Other (Specify)	SCE Surface Conduit Entry EMG Emergency HGT Custom Height F Frosted Lens NAT Natatorium Rated

PROJECT: DATE: QUANTITY:
TYPE: NOTE:

Head Office: 7144 NW Progress Ct Hillsboro, Oregon 97124 Tel: 503-645-0500 Fax: 503-645-8100 www.ligmanlightingusa.com

Ligman Lighting USA reserves the right to change specifications without prior notice, please contact factory for latest information. Due to the continual improvements in LED technology data and components may change without notice.

Portfolio

LT-3

COUNTY APPROVAL:
SIGNATURE: ______________________ DATE______________

Catalog #		Type
Project		
Comments		Date
Prepared by		

DESCRIPTION

2- inch LED recessed downlight with excellent light control and low aperture brightness. Offered with 15°, 25° 40° or 55° optic producing a smooth distribution. Lumen packages ranging from 500 to 2000 with color temperatures of 2400K, 2700K, 3000K, 3500K, 4000K and 5000K, in 80, 90 or 97CRI. Available with dim-to-warm technology – similar to halogen at full power, the 3000K LED warms smoothly as dimmed to 1850K creating a rich warm glow within the space.

SPECIFICATION FEATURES

Lower Reflector
Round or square painted die cast aluminum or anodized aluminum lower reflector with a lensed upper optical chamber providing superior lumen output with minimal source brightness. Anodized reflectors are offered in all Portfolio Alzak® finishes. Plaster lathing ring accessory offered for flush reflector transition.

Trim Retention
Reflector is retained with three or four pressure springs holding the flange tight to the finished ceiling surface.

Optic
TIR optic in 15°, 25°, 40, 55° or wall wash provides smooth beam without color separation. Media holder fits onto upper reflector and holds up one lens media. For non-lens trims only.

Plaster Frame / Collar
New Construction
Galvanized steel plaster frame designed for ceiling thickness from ½ to 1-1/4-inch.
Retrofit
Installs from below.

Universal Mounting Bracket
Accepts 1/2" EMT, C channel and bar hangers.

Junction Box
(4) 1/2" trade size pry outs positioned to allow straight conduit runs. Listed for (4) #12AWG (two in, two out) 90°C conductors and feed thru branch wiring. Lever connectors for simple push in wiring.

Thermal
Forged aluminum heat sink conducts heat away from the LED COB for optimal performance and long life.

LED
Chip on board with a multitude of highly efficient white LED's, combined with TIR optic produces an even distribution with no pixilation. Rated for 50,000 hours at 70% lumen maintenance. Auto resetting, thermally protected, LED's are turned off when safe operating temperatures are exceeded. Color variation within 3-step MacAdam ellipses. Flexible disconnect allows for tool-less replacement of LED engine from below ceiling. Available in 80, 90 or 97 CRI. D2W™ – dim-to-warm shifts CCT from 3000K to 1850K as fixture dims mimicking halogen sources.

Driver
Standard 120-277V 0-10V dimming driver provides flicker free dimming from 100% to 1%. Optional 120V leading edge, <1% 0-10V, Fifth Light, DMX or Lutron® Ecosystem. Driver can be serviced from above or through the aperture with standard D010 driver. Other drivers require above ceiling access.

Connected Lighting Systems
WaveLinx tilemount daylight sensor includes control module, sensor and cable allowing use with the comprehensive lighting system.

LumaWatt Pro (powered by Enlighted) wireless tile mount sensor and relay accessory enables wireless control using a tile mount sensor accessory.

Code Compliance
Thermally protected and cULus listed for protected damp locations. IP66 rated with lensed reflective when used with IP66 gasket kit accessory. EMI/RFI emissions per FCC 47CFR Part 18 Class B consumer limits. 1500 lumen and above are Non-IC rated - Insulation must be kept 3" from top and sides of housing. IC-rated up to 1000 lumens (except wall wash).
RoHS Compliant. Photometric testing completed in accordance with IES LM 79 and TM-30 standards. LED life testing completed in accordance with LM 80 standards.

Warranty
5-year warranty

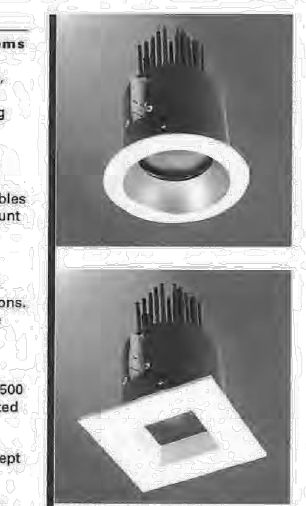

LD2B EU2B 2LB

500, 1000, 1500, 2000 Lumens
LED

2-Inch
Downlight
New Construction or Retrofit
2x4 and 2x6

Can be used to comply with California Title 24 High Efficacy requirements. Certified to California Title 20 Appliance Efficiency Database.

D2W

EATON Powering Business Worldwide

TD520051EN
2017-03-21 11:57:26

LT-3

LD2B EU2B 2LB

ORDERING INFORMATION

SAMPLE NUMBER: LD2B15D010

Housing	Lumens[1]	Voltage	Driver	Options
LD2B=New Construction Downlight 2" 2000 lumen **LDRT2B**=Remodel Downlight 2" 1500 lumen	**5**=500 lumens **10**=1000 lumens **15**=1500 lumens **20**=2000 lumens	**Blank**=120-277V	**D010**=0-10V Dimming, 5% to 100%, 120V-277V **D010TR**=0-10V or Line Voltage Dimming, 1% to 100%, 120V-277V **DE010**=0-10V Dimming, 0% to 100%, 120V-277V[6] **D5LT**=Fifth Light® (DALI) Dimming, 0% to 100%, 120V-277V[6] **DMX**=DMX Dimming, 0% to 100%, 120V-277V[6,9] **DL2**=Lutron® Hi-Lume Forward Phase Dimming, 1% to 100%, 120V Only[6] **DL3**=Lutron® Hi-Lume 3 Wire Dimming, 1% to 100%, 120V-277V[6] **DLE**=Lutron Ecosystem dimming 1% to 100%, 120V-277V[6]	**EMBOD**=Bodine® Emergency Module with Remote Test Switch[6] **EM7**=7W Emergency Module with Remote Test Switch[6] **EM14**=14W Emergency Module with Remote Test Switch[6]

SAMPLE NUMBER: EU2B158035

Power Module	Lumen Levels / Distribution[1] / Optic	CRI	Color 80 CRI	Color 90 CRI	Color 97 CRI
EU2B=2" Universal LED Module	**05SP15**=500 lumen 15° IC Rated **05WW**=500 lumen wall wash IC Rated[8] **10SP15**=1000 lumen 15° IC Rated **10WW**=1000 lumen wall wash Non-IC Rated[8] **0510NFL25**=500 and 1000 lumen 25° IC Rated **0510FL40**=500 and 1000 lumen 40° IC Rated **0510WFL55**=500 and 1000 lumen 55° IC Rated **15NFL25**=1500 lumen 25° Non IC Rated **15FL40**=1500 lumen 40° Non IC Rated **15WFL55**=1500 lumen 55° Non IC Rated **15WW**=1500 lumen wall wash Non IC Rated[8] **20NFL25**=2000 lumen 25° Non IC Rated **20FL40**=2000 lumen 40° Non IC Rated **20WFL55**=2000 lumen 55° Non IC Rated	**80**=80 CRI minimum **90**=90 CRI minimum **97**=97 CRI minimum	**27**=2700K **30**=3000K **35**=3500K **40**=4000K **50**=5000K	**24**=2400K **27**=2700K **30**=3000K **35**=3500K **40**=4000K **50**=5000K	**27**=2700K **30**=3000K

Dim to Warm
10NFL259030D2W=1000 lumen 25° IC Rated
15NFL259030D2W=1500 lumen 25° Non-IC
10FL409030D2W=1000 lumen 40° IC Rated
15FL409030D2W=1500 lumen 40° Non-IC
10WFL559030D2W=1000 lumen 55° IC Rated
15WFL559030D2W=1500 lumen 55° Non-IC

SAMPLE NUMBER: 2LBD1LI

Trim	Reflector	Flange	Finish
2LB=2" LED	**D**=Round downlight spun reflector **SW**=Round lensed Wall Wash, Spun Aluminum **DL**=Round Downlight lensed spun reflector **DC**=Round Cast Downlight[2] **DLC**=Round Lensed cast downlight[2] **PIN**=Round Pinhole downlight black oculus[5] **PINW**=Round Pinhole downlight white oculus[5] **DSQC**=Square Cast Downlight[2] **DSQLC**=Square Lensed cast shallow downlight[2]	**1**=Self-flanged[7] **2**=White Painted Self-flanged **3**=Rimless[3]	**LI**=Specular Clear[4] **H**=Semi-Specular Clear[4] **WMH**=Warm Haze[4] **WH**=Wheat[4] **GPH**=Graphite Haze[4] **B**=Specular Black[4] **MW**=Matte White **MB**=Matte Black[3] **MMS**=Matte Metallic Silver[3]

Accessories
LGSKT2IP66=IP66 Gasket Kit
PRR2=Round plaster lathing ring (order with rimless option)
Bar Hangers
HB26=Pair C-channel bar hanger, 26" long
RMB22=Pair wood joist bar hanger 22" long
Connected Lighting Systems
PORLWTPD1=LumaWatt Pro wireless sensor kit (0-10V only)[6]
TMWPD1=WaveLinx tilemount daylight sensor (includes control module, sensor, cable and tile mount)[6]

Notes:
1. Nominal Lumens will vary depending on selected distribution, color, driver and reflector finish.
2. Only available with Matte White, Matte metallic silver and Matte Black Finishes.
3. Available only on DC, DLC, D, and DL
4. Not available on DC or PIN.
5. Available matte white painted finish only. Flange designation should be blank.
6. D010TE, D5LT, DE010, Lutron, connected and emergency module drivers require accessible ceiling.
7. Flange is the same finish as reflector.
8. Order with 2LBSW Wall Wash trim.
9. DMX fixtures default to full on upon loss of DMX signal.

EATON Powering Business Worldwide
Eaton
1121 Highway 74 South
Peachtree City, GA 30269
P: 770-486-4800
www.eaton.com/lighting

Specifications and dimensions subject to change without notice.

REBELLE ARCHITECTURAL LIGHTING

LT-4

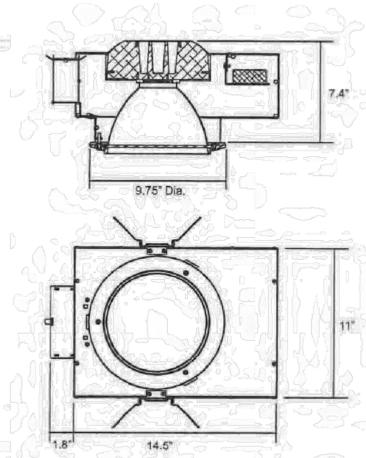

Sightlines 8000LED Vandal Resistant Recessed Downlight

EXTERIOR

MODEL	MOUNTING	LED MODULE	COLOR TEMPERATURE	VOLT	LENS	OPTIONS	TRIM COLOUR
8000	HC* hollow ceiling, non I.C.	32L 32 watts[1] 22L 22 watts[1] 16L 16 watts[1]	40K* 4000K LED module 30K 3000K LED module 35K 3500K LED module	120* 208 240 277	CPC* .188" clear polycarbonate CTG .156" clear tempered glass PR solite prismatic .156" tempered glass	CG cast guard BH bar hanger, set of 4 # 1287 PH painted housing TP tamper proof hex drive - center pin fasteners 80 80 CRI 90 90 CRI EM emergency battery	WT white texture BT black texture SM silver metallic AN aluminum natural BZ bronze GM gunmetal WS white satin BM black matte RAL specify no.

*Standard configuration unless otherwise specified   [1] Source nominal power

SAMPLE CATALOG NUMBER: 8000 - HC - 32L - 40K - 120 - CPC - WT
Using this catalog number would order 1 model 8000 recessed exterior luminaire for a hollow ceiling application with a COB LED light engine in 4000K and 70 CRI wired to 120 volts with a .188" clear polycarbonate lens and white texture paint on the trim.

CONSTRUCTION
Materials
Housing: Wiped, galvanized steel sheet. Trim: Pressure die cast aluminum. Reflector: Spun aluminum with diffuse ALZAK finish. Junction Box: Zinc plated steel. Lens: Clear polycarbonate, clear glass or prismatic (Solite) glass. Heat sink: cast aluminum. Fasteners: Hex drive, standard.

Electrical Components
Driver: Electronic, constant current, integral, 120-277V.
LED Module: COB 1208 or 1205, includes control leads for 0 - 10V dimming, 70 CRI standard.

MOUNTING
The 8000 series is for hollow ceilings. T-bar drywall or plaster. Units are provided with adjustable mounting hangers and are for non-insulated ceilings (non-IC). Insulation materials, if present, must be kept 3" away from housing. Junction box is suitable for thru-wiring with 4 no. 12 AWG through branch circuit conductors, suitable for 90°C (4IN / 4OUT).

OPTICAL
The 8000 series reflectors are precision formed from high purity aluminum. Finish is diffuse ALZAK as provided by Alux - Luxar.

PROTECTION
The 8000 series is listed for use in wet locations to UL and CSA Standards.

Trims are double gasketed to exclude contaminants from the reflector cavity to ensure longevity of optical performance.

The standard tamper resistant or optional tamper proof stainless steel fasteners secure trim to housing. Impact resistant polycarbonate or tempered glass lenses are provided and a cast guard is an optional extra.

LED life 50,000 hours, L70 @ 25°C ambient.

www.rebellelighting.com
© 2017 REBELLE All rights reserved. R17 Specifications subject to change without notice.

REBELLE ARCHITECTURAL LIGHTING

LT-4

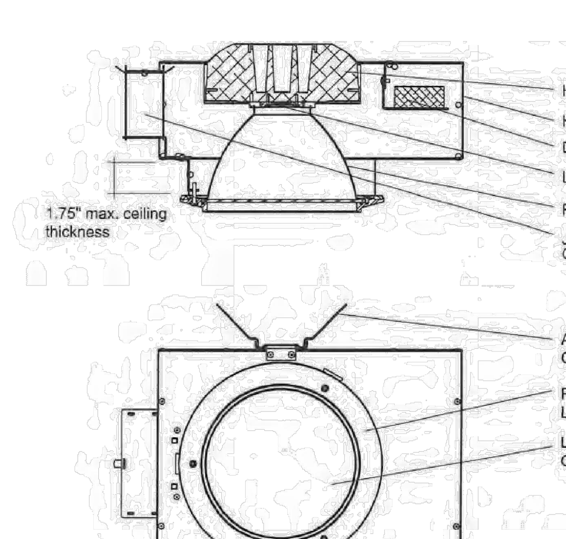

Sightlines 8000LED Detailed Product Description

Product	CCT	CRI*	Source Lumens	Delivered Lumens	LED Power (W)	System Power (W)	Lumens/Watt
8000-32L	3000/3500	70	4608	3456	31.65	37.68	92
8000-32L	4000	70	4921	3691	31.68	37.71	98
8000-22L	3000/3500	70	3180	2385	21.93	26.10	91
8000-22L	4000	70	3389	2542	21.94	26.12	97
8000-16L	3000/3500	70	2492	1869	15.61	18.58	101
8000-16L	4000	70	2638	1978	15.56	18.52	107

*Lumen Multiplier for CRI 80 use 0.91, CRI 90 use 0.78

www.rebellelighting.com
© 2017 REBELLE All rights reserved. R17 Specifications subject to change without notice.

STATE OF TEXAS
JANET MURRAY HOFFMAN
102117
LICENSED PROFESSIONAL ENGINEER

The seal appearing on this document was authorized by JANET MURRAY HOFFMAN P.E. 102117 8/10/2018

GALVESTON COUNTY BEACH PAVILION
CRYSTAL BEACH, TX 77650
BE-Arc LLC Project No : C-13-007.01

Ibis Engineering
REG # F-11156
P.O. Box 55171
Galveston, Texas 77555
PH 409.621.6740

THIS PRINT IS THE PROPERTY OF IBIS ENGINEERING IT MUST NOT BE TRACED OR REPRODUCED IN ANY MANNER NOR SHALL IT BE SUBMITTED WITHOUT PRIOR WRITTEN CONSENT FROM IBIS ENGINEERING.

easterwood ARCHITECTS STUDIO
409-354-8976
EASTERWOOD@BE-ARC.COM
2328 BALL STREET
GALVESTON TEXAS 77550

DATE	REVISION

BID SET

DATE ISSUED: 8/10/2018

COPYRIGHT 2018

E4.0

LT-7A & 7AE

TROFFERS

E-TR22L2 Series

LED Troffer - 2' x 2'
Replaces 2 x F32T8/U6

Our poplular LED Lay-In Troffers are new and improved! Enjoy the same fully-sealed durable steel construction of our previous models, a pre-installed and wired driver, and lower energy consumption (up to 40%).

Durable
- Made from 18 - 20 gauge steel
- Fully sealed construction keeps LEDs protected

Easy Install
- Pre-installed and wired driver
- Fits conventional grid ceilings

Recommended Use
- Offices
- Educational & retail
- Commercial & institutional

Input Voltage
- Universal (120V through 277V Operation)

Certifications

5 Year Limited Warranty · UL Listed · Suitable for DAMP Locations · DLC QPL Listed · DIMMABLE

e-conolight® | Making LED easy.

1501 96th Street, Sturtevant, WI 53177 | Phone (888) 243-9445 | Fax (262) 504-5409 | www.e-conolight.com

---

LT-5

ALCON LIGHTING

SHOP NOW >

Alcon Lighting **11142-4-W i66 Series** Architectural LED 4 Foot Linear Wall Mount Direct Light Fixture

FEATURES & SPECIFICATIONS

INTENDED USE
The **Alcon Lighting i66 Series Architectural LED Surface Mount Linear Lighting** fixtures bring clean lines and clear light to commercial LED or residential office lighting interiors. Our sleek, stylish fixtures offer highly effective and efficient lighting solutions for hotels, offices, retail outlets, restaurants, and more.

DETAILS
4 FT - W 6" x **L** 48" x **H** 6"
Construction: Die-formed and welded 22-gauge cold rolled steel
Lens: Snap In Frosted Acrylic Lens

ADDITIONAL FEATURES
Type: Direct Downlight
Voltage: 120-277
Wattage: 36W (2x18W)
Lumens: 4200 lms
CRI: 83
Listings: ETL and DLC for LED component only
LED lamp included

SPEC GRADE · DLC · 5 YEAR · ETL · TITLE 24 · UL

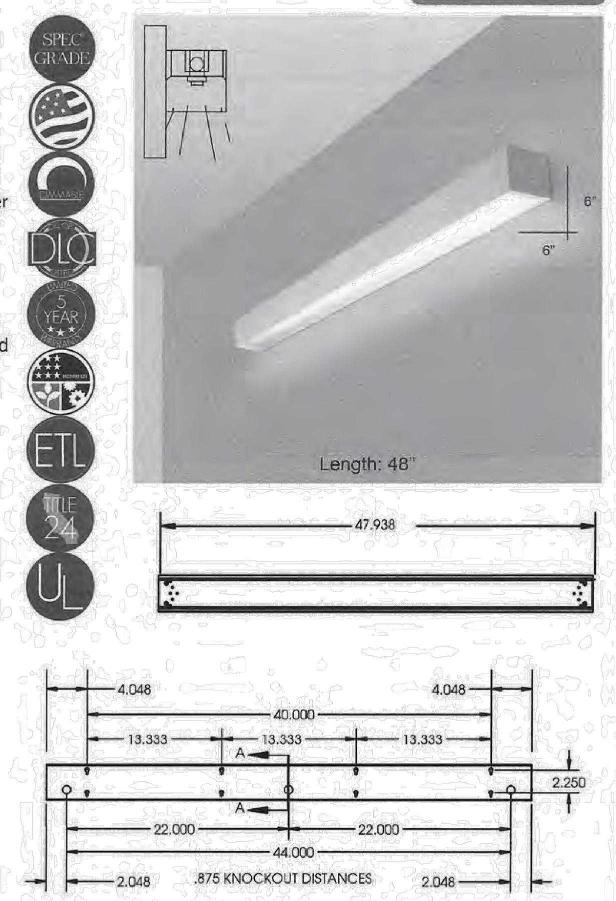

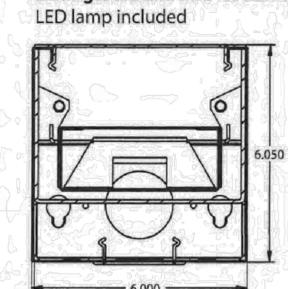

Ordering Information:

Example: (11142-4-W-40K-WH-2W-DS)

Model	Color Temp	Finish	Dimming	Options
11142-4-W Surface	35K 3500K	WH White	Blank Non-Dimming (Standard)	CRWK Continuous Row Wire Kit
	40K 4000K	BK Black	2W 2-Wire Incandescent Dimming (120V only) (Title 24 Compliant)	EM[1] Emergency Backup Battery
	50K 5000K	SL Silver		DS[1] Integrated Daylight Sensor
		BR Bronze		

[1]Factory Installed

AlconLighting.com © 2017 2845 S. Robertson Blvd. Los Angeles, CA 90034 USA (877)733-5236 sales@alconlighting.com

---

LT-8

Half Moon 3000K LED Deck Light BBR

15764BBR30R (Bronzed Brass)

Project Name:
Location:
Type:
Qty:
Comments:

Ordering Information

Product ID	15764BBR30R
Finish	Bronzed Brass
Available Finishes	AZT, AZT, BBR, BBR, WHT, WHT

Electrical

Voltage	15V

Qualifications

Safety Rated	Wet
Warranty	www.kichler.com/warranty

Primary Lamping

Light Source	LED
Lamp Included	Not Included
Max or Nominal Watt	2.5W

Dimensions

Height	2.00"
Width	4.00"

Kichler
7711 East Pleasant Valley Road
Cleveland, Ohio 44131-8010
Toll free: 866.558.5706 or kichler.com

Notes:
1) Information provided is subject to change without notice. All values are design or typical values when measured under laboratory conditions.
2) Incandescent Equivalent: The incandescent equivalent as presented is an approximate number and is for reference only.

KICHLER

LT-7A & 7AE

TROFFERS

E-TR22L2 Series

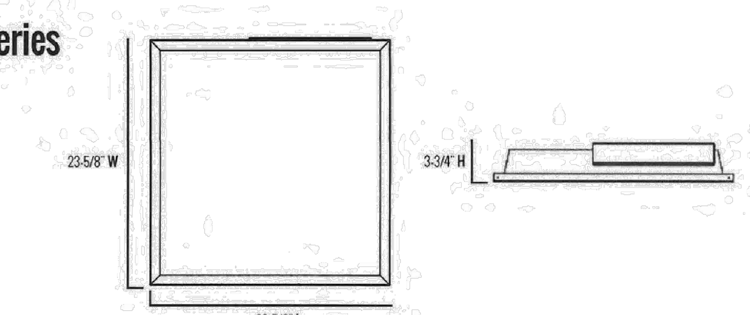

Series Overview

DIMENSIONS	PRODUCT WEIGHT	MOUNTING HEIGHT	SPACING
23-5/8" L x 23-5/8" W x 3-3/4" H	13.2 lbs.	---	---

Fixture Specifications

HOUSING	Durable steel construction White polyester powder-coat finish Sealed, maintenance-free fixture design
LENS ASSEMBLY	Precision engineered polystyrene diffuser prevents hot spots, shadows and glare, while providing uniform illumination
MOUNTING	Installs into conventional grid ceiling

Electrical Performance

OPERATING MINIMUM	LIFESPAN L_{70} AT 25°C (77°F)	POWER FACTOR	TOTAL HARMONIC DISTORTION	DIMMABLE
-18°C (0°F)	Estimated 60,000 Hours	> 0.9	< 20%	Yes
INPUT VOLTAGE	**120V**	**208V**	**240V**	**277V**
Current Draw (Amps)	0.32A	0.18A	0.16A	0.14A

Warranty & Certifications

WARRANTY	UL LISTED	DLC	IC-RATED
5-Year Limited	Damp Locations	Yes	For direct contact with insulation

CORRELATED COLOR TEMPERATURE (CCT)

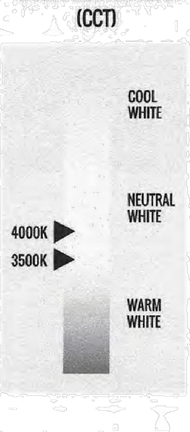

Output Specifications

SKU	LIGHT OUTPUT	COLOR TEMP (See chart)	POWER CONSUMPTION	COLOR ACCURACY	REPLACES
E-TR22L2383U	3700 Lumens	Warm White (3500K)	38W	≥ 80 CRI	2 x F32T8/U6
E-TR22L2384U	3800 Lumens	Neutral White (4000K)	38W	≥ 80 CRI	2 x F32T8/U6

Due to continuous product improvement, information in this document is subject to change.
Revision Date: 05/04/16
1501 96th Street, Sturtevant, WI 53177 | Phone (888) 243-9445 | Fax (262) 504-5409 | www.e-conolight.com

e-conolight®

LT-6

REBELLE ARCHITECTURAL LIGHTING

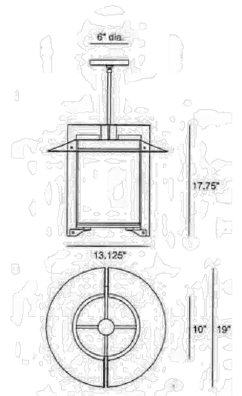

OFFICE

Orchestra Circle 2756PLED Maxi Pendant Mount

INTERIOR

MODEL	LED WATTS	COLOR TEMPERATURE	VOLT	SHIELD	DIFFUSER	DRIVER LOCATION	OPTIONS	COLOR
2756P	32L 2612 lumens[1] 32w LED/ 38w system	40 4000K	120*	PF perforated liner	RF* frost	REM* remote driver	P(__") pendant length	WT white texture
		30 3000K	208		CL clear	INT integral driver	C86 ball aligner hanger	BT black texture
		35 3500K	240				WL wet location listing	SM silver metallic
			277				DIM dimming driver	AN aluminum natural
			347+				90 90 CRI	BZ bronze
								GM gunmetal
								WS white satin
								BM black matte
								RAL specify no.

*Standard configuration unless otherwise specified [1]Delivered lumens based on PF option and standard frost diffuser (4000K, 80 CRI) +Consult factory

SAMPLE CATALOG NUMBER: 2756P - 32L40 - 120 - RF - REM - WT
Using this catalog number would order 1 model 2756P maxi circle pendant with 4000K, 80 CRI LED light engine at 120 volts with frosted acrylic lens and remote mounted driver, painted with white texture polyester powder coat.

CONSTRUCTION

Materials
Support Frame: Heavy aluminum plate. Hinge/Lock up: Pressure die cast aluminum. Glare guard / Ceiling canopy / Reflector disk: Aluminum sheet, die formed. Diffusers (side): Thermo-formed acrylic. Bottom lens: Acrylic. Fasteners: Stainless steel.

Electrical Components
Driver: Constant current 900mA, 84% efficiency. Light engine: COB 1208 24mm x 20mm with a 15mm LES.

MOUNTING

This luminaire is designed to mount to a recessed 4" octagon j-box (by others). Remote mounted driver assemblies are standard (consult factory for lamp to driver distance). Optional integral driver assemblies are offered. For wet locations luminaire must be restrained from wind action. Special hanger or restraint required (by others).

OPTICAL

Luminaire has a choice of frost or clear lens and diffuser, with frost supplied as standard. The perforated liner is supplied if specified. The reflector disk is fixed in top position. Standard optic, Type V square (130°).

PROTECTION

The Orchestra maxi pendant is listed for use in damp locations to UL and CSA Standards. An optional wet location label can be provided.

LEDs are rated for 50,000 hour life with lumen maintenance >70% (L70).

www.rebellelighting.com
© 2015 REBELLE All rights reserved. R15 Specifications subject to change without notice.

LT-1

11/11/15

LED VAPOR TIGHT STRIP 48-WATT LED (E-VW SERIES)

Applications: For use in car washes, airports, tunnels, stairwells and maintenance areas

47-3/16"**L** x 4-5/16"**W** x 3-3/8"**H**
Weight: 7.5 lbs.

Catalog #	Description	Input Voltage	Initial Delivered Lumens	CCT	CRI	50K Hours Projected Lumen Maintenance Factor at 25°C[1]	Comparable To
E-VW4L04UCW	48W LED, Cool White	120V-277V	4700	5000K	82	82%	2-Lamp F32T8 Vapor Tight
E-VW4L04UNW	48W LED, Neutral White	120V-277V	4700	4000K	82	82%	2-Lamp F32T8 Vapor Tight

[1] Calculated L_{70} based on 9,000 hours of LM-80 testing: >54,000 hours

Performance
- Estimated 54,000 hours of maintenance-free operation to L_{70} at 25°C (77°F)
- -27°C (-17°F) minimum starting temperature
- 5-year limited warranty

Construction & Materials
- Extruded aluminum housing with gloss white polycarbonate corrosion resistant cover
- High-efficiency polycarbonate frosted diffuser is optically engineered to reduce glare and hotspots
- Can be surface mounted (mounting clips included) or suspended. Cable sold separately (E-ACSC5)

Electrical
- Non-dimmable
- 120V through 277V Operation
- Amperage Draw: 0.450A at 120V, 0.260A at 208V, 0.225A at 240V, 0.195A at 277V
- > 0.9 power factor
- < 20% total harmonic distortion

Regulatory
- UL Listed for wet locations
- IP66 Rated

Accessories:

CAT.# E-ACSC5 Mounting Safety Cable
Cable Length: 5', field adjustable.
Note: Requires 2 per fixture if used for mounting

e-conolight®

Due to continuous product improvement, information in this document is subject to change. All published photometric testing performed to IESNA LM-79-08 standards by a NVLAP certified laboratory. Fixture photometry was completed on a single representative fixture. Actual production units may vary up to ±10% of initial delivered lumens. Lumen maintenance values at 25°C (77°F) are calculated per TM-21 based on LM-80 data and in-situ fixture testing.
1501 96th Street, Sturtevant, WI 53177 | Phone (888)243-9445 | Fax (262)504-5409 | www.e-conolight.com

---

COUNTY APPROVAL:
SIGNATURE ______________________________ DATE ______________

STATE OF TEXAS
JANET MURRAY HOFFMAN
102117
LICENSED PROFESSIONAL ENGINEER

The seal appearing on this document was authorized by
JANET MURRAY HOFFMAN
P.E. 102117
8/10/2018

GALVESTON COUNTY
BEACH PAVILION
CRYSTAL BEACH, TX 77650

BE-Arc LLC Project No : C-13-007.01

Ibis Engineering
REG # F-11156
P.O. Box 55171
Galveston, Texas 77555
PH 409.621.6740

THIS PRINT IS THE PROPERTY OF IBIS ENGINEERING IT MUST NOT BE TRACED OR REPRODUCED IN ANY MANNER NOR SHALL IT BE SUBMITTED WITHOUT PRIOR WRITTEN CONSENT FROM IBIS ENGINEERING.

easterwood
ARCHITECTS STUDIO
409-354-8976
EASTERWOOD@BE-ARC.COM
2328 BALL STREET
GALVESTON TEXAS 77550

DATE	REVISION

BID SET

DATE ISSUED:
8/10/2018

COPYRIGHT 2018

E4.1