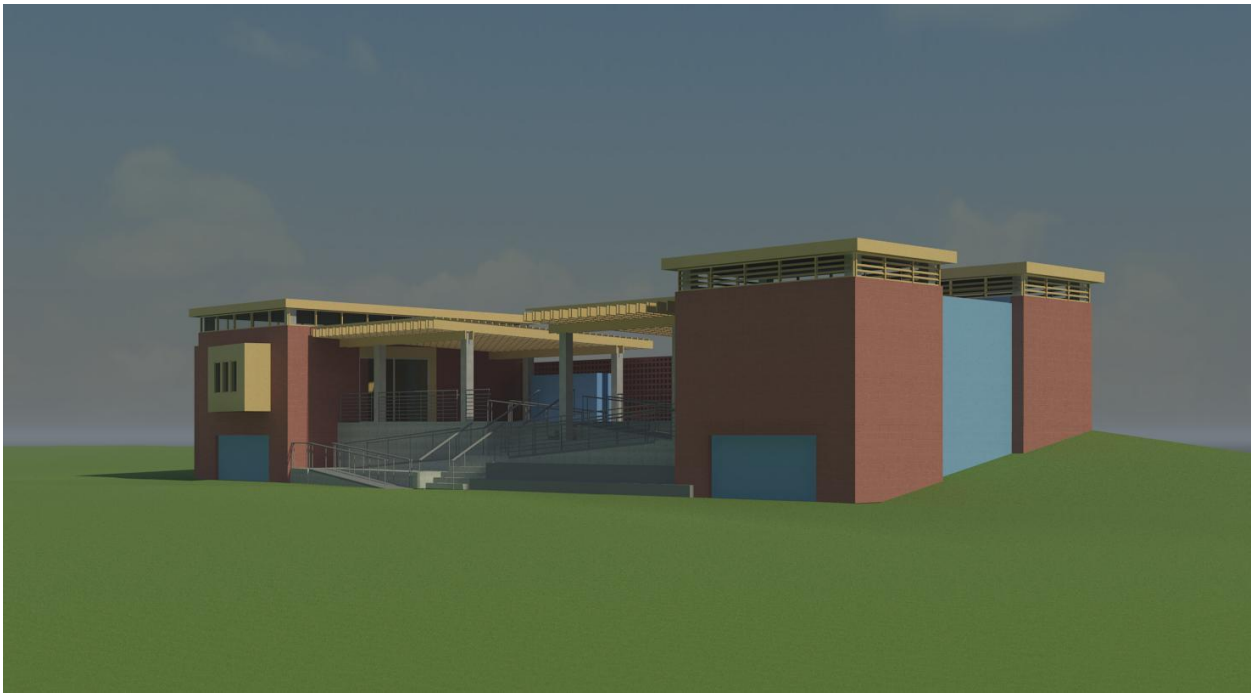

GALVESTON COUNTY BEACH PAVILION

CRYSTAL BEACH, TX 77650

PROJECT MANUAL

December 12, 2017

DOCUMENT 00003
TABLE OF CONTENTS

REQUIREMENTS

00100	Request for Proposal
00101	Specific Provisions for the Proposal
00102	Agreement Between Galveston County and Contractor
00103	General Terms & Conditions of the Contract
00104	Specific Conditions of the Contract
00201	Electrical Files Waiver, Release, and Indemnity Agreement

SPECIFICATIONS

01010	Summary of Work
01012	Wage Scale
01013	Employee Verification
01020	Allowances
01025	Schedule of Values
01035	Modification Procedures
01040	Project Coordination
01092	Abbreviations and Symbols
01200	Project Meetings
01300	Submittals
01310	Construction Schedule
01410	Testing Lab Services
01420	Notification of Architect Requirements
01500	Temporary Facilities and Controls
01630	Substitutions
01710	Guarantees and Certificates, and Closeout
02100	Site Preparation
02161	Trench Safety System
02220	Excavation, Trenching and Backfilling
02252	Cement Stabilized Sand
02515	Hydrostatic Testing of Pipelines
02521	Concrete Paving
02571	Pavement Repair and Resurfacing
02633	Precast Concrete Inlets, Headwalls, and Wingwalls
02665	Water Tap and Service Line Installation
02675	Disinfection of Water Lines
02711	Landscape Planting
02720	Storm Sewers
02731	Sanitary Sewer Force Mains
02732	Acceptance Testing for Sanitary Sewer
02775	Concrete Sidewalks
02937	Seeding and Sodding
03000	Concrete
03356	Concrete Floor Finishing
04065	Mortar and Masonry Grout
04200	Unit Masonry
04212	Glazed Structural Clay Tile Masonry

05272	Aluminum Handrails and Railings
05500	Metal Fabrications
06100	Rough Carpentry
06160	Sheathing
06400	Architectural Woodwork
07211	Foamed in Place Insulation
07424	Composite Building Panels
07542	TPO Mechanically Fastened Roofing System
07600	Flashing and Sheet Metal
07650	Flexible Flashing
07840	Firestopping
07900	Joint Sealers
08120	Interior Aluminum Frames
08140	Wood Doors
08411	Aluminum Framed Entrances and Storefronts
08510	Exterior Aluminum Windows
08710	Door Hardware
08800	Glazing
08910	Louvers
09260	Gypsum Board Assemblies
09300	Tile
09510	Acoustical Ceilings
09651	Resilient Base
09772	Fiberglass Reinforced Wall Panels
09900	Painting and Coatings
10140	Signage
10211	Plastic Toilet Compartments
10261	Corner Guards
10280	Toilet Accessories
10512	Plastic Lockers
10544	Fire Protection Specialties
10750	Flag Poles
10820	Equipment Screens
11450	Residential Equipment
12210	Horizontal Louver Blinds
12310	Manufactured Shelving
12705	Furniture
12932	Trash and Litter Receptors
12934	Site Seating and Tables
16670	Lighting Protection System

DOCUMENT 00100

Request for Competitive Sealed Proposals

GALVESTON COUNTY
PURCHASING DEPARTMENT

REQUEST FOR PROPOSAL

RFP #B181016

BOLIVAR BEACH PAVILION

BID DUE DATE: 03/22/2018

2:00 P.M. CST

Rufus Crowder, CPPO, CPPB
Purchasing Agent
Galveston County
722 Moody (21st Street)
Fifth (5th) Floor
Galveston, Texas 77550
(409) 770-5372

RFP #B181016
OPENING: 03/22/2018
TIME: 2:00 P.M.

REQUEST FOR PROPOSAL
BOLIVAR BEACH PAVILION
GALVESTON COUNTY, TEXAS

Sealed proposals in **sets of six (6), one (1) unbound original, five (5) copies and one (1) electronic copy,** will be received in the office of the Galveston County Purchasing Agent **until 2:00 P.M. CST, on Thursday, March 22, 2018** and opened immediately in that office in the presence of Galveston County Auditor and the Purchasing Agent. Sealed submittals are to be delivered to Rufus G. Crowder, CPPO CPPB, Galveston County Purchasing Agent at the Galveston County Courthouse, 722 Moody, (21st Street), Floor 5, Purchasing, Galveston, Texas 77550, (409) 770-5372. **The time stamp clock located in the Purchasing Agent's office shall serve as the official time keeping piece for this solicitation process. Any proposal received after 2:00 P.M. CST on the specified date will be returned unopened.**

Purpose:
Galveston County is seeking a company to provide a clean, safe restroom and rinse station location for visitors for the Bolivar Beach. The site will also include a space for picnicking, environmental and beach education information and provide 1st aid services as needed.

All proposals must be marked on the outside of the envelope:
RFP #B181016
Bolivar Beach Pavilion

Proposer's name, return address, should be prominently displayed on the proposal package for identification purposes.

Specifications can be by visiting the Galveston County website @ http://www.galvestoncountytx.gov/pu/Pages/BidListings.aspx.

Submitted prices shall be either lump sum or unit prices as shown on proposal sheets, if applicable. The net price shall be delivered to Galveston County, including all freight, shipping, and license fees. Galveston County is tax exempt and no taxes should be included in bid pricing.

A non-mandatory pre-bid conference will be held on Tuesday, March 6, 2018 at 10:00 a.m. at the Galveston County Courthouse, Purchasing Department, 722 Moody (21st Street), Fifth (5th) Floor, Galveston, Texas 77550.

Copies of bid/Contract Documents may also be picked up from Galveston County Blue Print, 1419 23rd St., Galveston, TX 77550. Request full sets of drawings and/or Specifications for the project: Galveston County Bolivar Beach Pavilion. Partial sets of drawings are not available. Print must be ordered by phone at 409.763.1661, or in person, and must be paid in full by the bidder prior to release.

Upon satisfaction of contractual terms (e.g., goods delivered in promised condition, services rendered as agreed, etc.), contractor shall be paid via Galveston County's normal accounts payable process.

Bonding Requirements:

- **PROPOSAL GUARANTEE:** Evidencing its firm commitment to engage in the contract if Proposer is selected for award of contract, each Proposer is required to furnish with their proposal a Cashier's Check, or an acceptable Bidder's Bond, in the amount of five percent (5%) of the total contract price. The Bidder's Bond must be executed with a surety company authorized to do business in the State of Texas. Failure to furnish the bid/proposal guarantee in the proper form and amount, by the time set for opening of bids may be cause or rejection of the bid.

- **PERFORMANCE AND PAYMENT BONDS:**
  Successful proposer, before beginning work, shall execute a performance bond and a payment bond, each of which must be in the amount of the contract. The required payment and performance bonds must each be executed by a corporate surety in accordance with Section 1, Chapter 87, Acts of the 56th Legislature, Regular Session, 1959 (Article 7.19-1, Vernon's Texas Insurance Code).

Attention is called to the fact that not less than, the federally determined prevailing (Davis-Bacon and Related Acts) wage rate, as issued by the Office of Rural Community Affairs and contained in the contract documents, must be paid on this project. In addition, the successful proposer must ensure that employees and applicants for employment are not discriminated against because of race, color, religion, sex age or national origin.

The Galveston County Commissioners' Court reserves the right to waive any informality and to reject any and all proposals and to accept the proposal or proposals which, in its opinion, is most advantageous to Galveston County with total respect the governing laws.

All contractors/subcontractors that are debarred, suspended or otherwise excluded from or ineligible for participation on federal assistance programs may not undertake any activity in part or in full under this project

Rufus G. Crowder, CPPO CPPB
Purchasing Agent
Galveston County

REQUEST FOR PROPOSAL
BOLIVAR BEACH PAVILION
GALVESTON COUNTY, TEXAS

Table of Contents

GENERAL PROVISIONS:

1. PROPOSAL PACKAGE 1
2. PROPOSER'S RESPONSIBILITY 1
3. TIME FOR RECEIVING PROPOSALS 1
4. COMPETITIVENESS, INTEGRITY, INQUIRIES AND QUESTIONS 2
5. PROPOSAL OPENING 3
6. WITHDRAWAL OF PROPOSAL/FIRM BID RULE 3
7. COMMISSIONERS COURT 3
8. REJECTION OF PROPOSALS/DISQUALIFICATION 3
9. RESTRICTIVE OR AMBIGUOUS SPECIFICATIONS 4
10. SUBSTITUTES/DESCRIPTION OF MATERIALS AND EQUIPMENT 4
11. EXCEPTIONS TO PROPOSAL 4
12. PRICING 4
13. PROCUREMENT CARD (P-CARD) PROGRAM 5
14. PASS THROUGH COST ADJUSTMENTS 5
15. MODIFICATION OF PROPOSALS 5
16. PRE-PROPOSAL CONFERENCE 6
17. SIGNATURE OF PROPOSALS 6
18. AWARD OF PROPOSALS – EVALUATION CRITERIA AND FACTORS 6
19. DISPUTE AFTER AWARD/PROTEST 7
20. PUBLIC INFORMATION ACT (f/k/a Open Records Act) 8
21. PROPOSER'S E-MAIL ADDRESSES – CONSENT TO DISCLOSURE 8
22. RESULTANT CONTRACT 8
23. CONTRACT TERM 9
24. TERMINATION FOR DEFAULT 9
25. TERMINATION FOR CONVENIENCE 9
26. FORCE MAJEURE 10

REQUEST FOR PROPOSAL
BOLIVAR BEACH PAVILION
GALVESTON COUNTY, TEXAS

27. ESTIMATED QUANTITIES 10
28. CONTRACTOR INVESTIGATION 10
29. NO COMMITMENT BY COUNTY OF GALVESTON 10
30. PROPOSAL COSTS BORNE BY PROPOSER 10
31. BEST AND FINAL OFFERS (BAFO) 11
32. SINGLE PROPOSAL RESPONSE 11
33. CHANGES IN SPECIFICATIONS 11
34. PROPOSAL IDEAS AND CONCEPTS 11
35. PROPOSAL DISCLOSURES 11
36. INDEMNIFICATION 12
37. REQUIREMENT OF AND PROOF OF INSURANCE 12
38. PROPOSAL GUARANTEE 13
39. PERFORMANCE AND PAYMENT BONDS (if required) 14
40. PATENT AND COPYRIGHT PROTECTION 14
41. CONFLICT OF INTEREST DISCLOSURE REPORTING (FORM CIQ) 15
42. DISCLOSURE OF INTERESTED PARTIES/FORM 1295 16
43. CERTIFICATION REGARDING DEBARMENT, SUSPENSION, PROPOSED DEBARMENT, AND OTHER RESPONSIBILITY MATTERS & REQUIREMENT TO REGISTER IN SAM 17
44. SOVEREIGN IMMUNITY 18
45. CONTROLLING LAW AND VENUE 18
46. MERGERS, ACQUISITIONS 18
47. DELAYS 18
48. ACCURACY OF DATA 18
49. SUBCONTRACTING/ASSIGNMENT 18
50. INDEPENDENT CONTRACTOR 19
51. MONITORING PERFORMANCE 19
52. SUBJECT TO APPROPRIATION OF FUNDS 19
53. CONTRACTS SUBJECT TO GRANT FUNDING 19
54. PROCUREMENT ETHICS 19
55. NON-COLLUSION AFFIDAVIT 21
56. CERTIFICATION REGARDING LOBBYING 21

REQUEST FOR PROPOSAL
BOLIVAR BEACH PAVILION
GALVESTON COUNTY, TEXAS

57. NON-DISCRIMINATION 22
58. RECORD RETENTION AND RIGHT TO AUDIT 23
59. TITLE VI ASSURANCES/TxDOT 23
60. SECTION 231.006, FAMILY CODE/DELINQUENT CHILD SUPPORT 24
61. ANTITRUST 25
62. LABOR STANDARDS 25
63. PROCUREMENT LAWS 25
64. ENTIRETY OF AGREEMENT AND MODIFICATION 30
65. NOTICE 30
66. USE OF DHS SEAL, LOGO, AND FLAGS PROHIBITED WITHOUT PRIOR APROVAL 31
67. FEDERAL GOVERNMENT NOT A PARTY 31
68. PROGRAM FRAUD AND FALSE OR FRAUDULENT STATEMENTS OR RELATED ACTS 31
69. LEAD AND ASBESTOS 31

GENERAL PROVISIONS – REQUEST FOR PROPOSAL
BOLIVAR BEACH PAVILION
GALVESTON COUNTY, TEXAS

1. PROPOSAL PACKAGE

The Request for Proposal, general and special provisions, drawings, specifications/line item details, contract documents, addenda (if any), and the Proposal are all part of the Proposal package. ***PROPOSALS must be submitted in sets of six (6), one (1) unbound original, five (5) copies and one (1) electronic copy*** *on the forms provided by the County if County forms are provided, and shall include the Proposal sheets completed in their entirety and signed by an authorized representative by original signature. Failure to complete and sign the proposal sheets/contract page(s) may disqualify the proposal from being considered by the Commissioners Court. Any individual signing on behalf of the Proposer expressly affirms that he or she is duly authorized to tender this proposal and to sign the proposal under the terms and conditions in this request for proposal on behalf of the Proposer and to bind the Proposer to the terms and conditions of this request for proposal and the Proposer's response hereto. Proposer further understands that Proposers' signing of the contract shall be of no effect unless the contract is subsequently awarded by the Commissioners Court and the contract properly executed by the Commissioners Court. All figures must be written in ink or typed. Figures written in pencil or with erasures are not acceptable. However, mistakes may be crossed out, corrections inserted, and initialed in ink by the individual signing the bid. If there are discrepancies between unit prices quoted and extensions, the unit price shall prevail. Each Proposer is required to thoroughly review this entire request for proposal package to familiarize themselves with the proposal procedures, the plans and specifications for the requested work, as well as the terms and conditions of the contract the successful Proposer will execute with the County.*

2. PROPOSER'S RESPONSIBILITY

The Proposer must affirmatively demonstrate its responsibility. The Proposer must also meet the following minimum requirements:

A. have adequate financial resources or the ability to obtain such resources as required;
B. be able to comply with all federal, state, and local laws, rules, regulations, ordinances and orders regarding this request for proposal;
C. have a satisfactory record of performance;
D. have a satisfactory record of integrity and ethics; and
E. be otherwise qualified and eligible to receive an award.

3. TIME FOR RECEIVING PROPOSALS

Proposals may be submitted by mail or hand delivery and **must be submitted only to the Galveston County Purchasing Agent**. If by delivery, the Proposer must deliver the Proposal to the reception desk in the County Purchasing Agent's Office. The delivery and mailing instructions for the Galveston Count Purchasing Agent are the following:

Rufus Crowder, CPPO CPPB
Galveston County Purchasing Agent
722 Moody, Fifth (5th) Floor
Galveston, Texas 77550

Proposals will **not** be accepted by facsimile transmission or by electronic mail (email) unless superseded by instructions within the Special Provisions sections of this solicitation. Proposals must be received by the County Purchasing Agent on or before the deadline for the opening of the proposals. For clarity, mailing date/postmark is **not**

GENERAL PROVISIONS – REQUEST FOR PROPOSAL
BOLIVAR BEACH PAVILION
GALVESTON COUNTY, TEXAS

sufficient – proposals **must be received** by the County Purchasing Agent on or before the deadline. Late proposals will not be accepted and will be returned to the proposer unopened. Proposals received prior to the submission deadline will be maintained unopened until the specified time for opening.

The County Purchasing Agent will accept proposals from 8:00 a.m. to 5:00 p.m. on each business day up to the submission deadline. Business days do not include Saturdays and Sundays, and do not include other days in which the County is closed for business in observance of holidays or for other reasons.

The time-stamp clock within the County Purchasing Agent's Office shall be the official time-clock for the purpose of this solicitation and thus shall be the determinant of whether the proposal was timely received.

The proposer should prominently identify the procurement number and name on the outside of the envelope/mailing package. A label shall be provided for this purpose and usage of the label is preferred. If the proposer fails to identify the request for proposal number and name on the outside of the envelope as required, the Purchasing Agent will open the envelope for the sole purpose of identifying the solicitation number for which the submission was made. The envelope will then be resealed. No liability will attach to a County office or employee for the premature opening of a proposal.

If a proposal is not submitted, return this Request for Proposal and state reason (s), otherwise your name may be removed from the Purchasing Agent's mailing list.

4. COMPETITIVENESS, INTEGRITY, INQUIRIES AND QUESTIONS

To prevent biased evaluations and to preserve the competitiveness and integrity of the procurement process, **proposers are to direct all communications regarding this invitation to bid only to the Galveston County Purchasing Agent,** unless otherwise specifically noted.

Do not contact the requesting department. Attempts by offering firms to circumvent this requirement will be viewed negatively and may result in rejection of the proposal of the firm found to be in non-compliance.

All questions regarding this Request for Proposal must be submitted in writing to:

Rufus Crowder, CPPO CPPB, Purchasing Agent
722 Moody
Fifth (5th) Floor
Galveston, Texas 77550
Fax: (409) 621-7997
E-mail: rufus.crowder@co.galveston.tx.us

All questions received and the responses thereto will be mailed, emailed, or faxed to all prospective proposers by addendum. No inquiries except clarification of instructions will be addressed by telephone.

Proposer is advised to carefully review this Request for Proposal – it provides specific information necessary to aid participating firms in formulating a thorough response. Proposer's failure to examine all documents shall not entitle the proposer to any relief from the conditions imposing in the Request for Proposal and the resultant contract.

An authorized person from the proposer must sign the proposal. This signatory must be a person from the submitting firm who is duly authorized to tender and sign the proposal on behalf of the proposer and to bind the proposer to the terms and conditions of this Request for Proposal, the proposer's response, and all other terms and conditions of the contract. By this signature, the proposer further acknowledges that the proposer has read the request

GENERAL PROVISIONS – REQUEST FOR PROPOSAL
BOLIVAR BEACH PAVILION
GALVESTON COUNTY, TEXAS

for proposal and proposal documents thoroughly before submitting a proposal and will fulfill the obligations in accordance to the terms, conditions, and specifications detailed herein.

5. PROPOSAL OPENING

The Purchasing Agent shall open the proposals on the date and time specified herein. Only the names of the proposers will be read at the opening. Proposals shall be opened in a manner that avoids disclosure of the contents to competing offerors and that keeps the proposals secret during negotiations. The Purchasing Agent will examine proposals promptly and thoroughly. Upon opening, no proposal may be withdrawn for a period of sixty (60) calendars days after the proposal opening date.

6. WITHDRAWAL OF PROPOSAL/FIRM BID RULE

Proposers may request withdrawal of their sealed proposal prior to the scheduled proposal opening time provided the request for withdrawal is submitted to the Purchasing Agent in writing. No proposals may be withdrawn for a period of sixty (60) calendar days after opening of the proposals.

7. COMMISSIONERS COURT

No contract is binding on the County until it is properly placed on the Commissioners Court agenda, approved in open Court, authorized to be executed by the County Judge, and fully executed by both parties.

Department heads and elected officials are not authorized to enter into any type of agreement or contract on behalf of the County. Only the Commissioners Court acting as a body may enter into a contract on behalf of and contractually bind the County. Additionally, department heads and elected officials are not authorized to agree to any type of supplemental agreements or contracts for goods or services. Supplemental agreements are subject to review by the County Legal Department prior to being accepted and signed by the County's authorized representative.

8. REJECTION OF PROPOSALS/DISQUALIFICATION

Galveston County, acting through its Commissioners Court, reserves the right to:

- reject any and all proposals in whole or in part received by reason of this request for proposal;
- waive any informality in the proposals received;
- disregard the proposal of any proposer determined to be not responsible;
- disregard the proposal of any proposer determined to have not submitted its proposal timely; and/or
- discontinue its efforts for any reason under this request for proposal package at any time prior to actual execution of contract by the County.

Proposers may be disqualified and rejection of proposals may be recommended to the Commissioners Court for any of (but not limited to) the following causes:

A. Failure to use the proposal forms furnished by the County, if applicable;
B. Lack of signature by an authorized representative of proposer;
C. Failure to properly complete the proposal;
D. Failure to meet the mandatory requirements of this request for proposal; and/or

GENERAL PROVISIONS – REQUEST FOR PROPOSAL
BOLIVAR BEACH PAVILION
GALVESTON COUNTY, TEXAS

E. Evidence of collusion among proposers.

9. RESTRICTIVE OR AMBIGUOUS SPECIFICATIONS

It is the responsibility of the prospective proposer to review the entire request for proposal packet and to notify the Purchasing Agent if the specifications are formulated in a manner that would restrict competition or appear ambiguous. Any protest or question(s) regarding the specifications or proposal procedures must be received in the Purchasing Agent's Office not less than seventy-two (72) hours prior to the time set for proposal opening. Proposers are to submit their proposal as specified herein or propose an approved equal.

10. SUBSTITUTES/DESCRIPTION OF MATERIALS AND EQUIPMENT

Any brand name or manufacturer reference used herein is intended to be descriptive and not restrictive, unless otherwise noted, and is used to indicate the type and quality of material. The term "or equal" if used, identifies commercially produced items that have the essential performance and salient characteristics of the brand name stated in the item description. All supplies, material, or equipment shall be new and of the most suitable grade for the purpose intended. For clarification, "new" includes products containing recovered materials that are EPA-designated items. It is not the County's intent to discriminate against any materials or equipment of equal merit to those specified. However, if proposer desires to use any substitutions, prior written approval must be obtained from the Purchasing Agent and sufficiently in advance such that an addendum may be issued. All material supplied must be one hundred percent (100%) asbestos free. Proposer, by submission of its proposal, certifies that if awarded any portion of this procurement, the proposer will supply only material and equipment that is 100% asbestos free.

11. EXCEPTIONS TO PROPOSAL

The proposer will list on a separate sheet of paper any exceptions to the conditions of this request for proposal. This sheet will be labeled, "Exceptions to Proposal Conditions", and will be attached to the proposal. If no exceptions are stated, it will be understood that all general and special conditions will be complied with, without exception.

The proposer must specify in its proposal any alternatives it wishes to propose for consideration by the County. Each alternative should be sufficiently described and labeled within the proposal and should indicate its possible or actual advantage to the program being offered.

The County reserves the right to offer these alternatives to other proposers.

12. PRICING

Proposals will be either lump sum or unit prices as shown on the proposal sheet. The net priced items will be delivered to Galveston County, including all freight, shipping, and delivery charges.

Cash discount must be shown on the proposal, otherwise prices will be considered net. Unless prices and all information requested are complete, the proposal may be disregarded and given no consideration.

In case of default by the contractor, the County of Galveston may procure the articles or services from other sources and may deduct from any monies due, or that may thereafter become due to the contractor, the difference between the price named in the contract of purchase order and the actual cost thereof to the County of Galveston. Prices paid by the County of Galveston shall be considered the prevailing market price at the time such purchase is made. Periods of

GENERAL PROVISIONS – REQUEST FOR PROPOSAL
BOLIVAR BEACH PAVILION
GALVESTON COUNTY, TEXAS

performance may be extended if the facts as to the cause of delay justify such extension in the opinion of the Purchasing Agent and the Commissioners' Court.

13. PROCUREMENT CARD (P-CARD) PROGRAM

The County of Galveston participates in a Procurement Card (P-Card) program that allows payments made to a vendor by credit card. This method typically results in substantially faster bill payments, sometimes within three (3) to five (5) days of the actual transaction date. All transaction fees from the card provider are to be paid by the successful contractor. If your company will accept payment via credit card (Visa, MasterCard), please notate this in your Proposal submittal.

14. PASS THROUGH COST ADJUSTMENTS

Except in instances of extreme extenuating circumstances, Contractor prices shall remain firm throughout the contract period and any renewals. Examples of extreme extenuating circumstances include such situations as a nationwide rail strike, oil shortage or oil embargo.

In extreme extenuating circumstances, Contractors may be allowed to temporarily "pass through" additional costs they are forced to incur through no fault of their own. A request for a pass through cost increase will not be considered unless a Contractor's cost for the Contractor's product exceeds 10% over the original cost for the product. Also, the increase in cost must be nationwide and consistent for a minimum period of sixty (60) calendar days. Costs that historically are anticipated to rise over a period of time (for example only, such as wages or insurance costs) do not qualify for pass through. If a Contractor thinks he will be asking for a pass through cost adjustment during the term of the contract, then the original cost of the product to Contractor must be stated in Contractor's original proposal.

A request for a pass through cost does not guarantee that one will be granted. Contractors must submit such information on each request as required by the County Purchasing Agent. The County Purchasing Agent will review each request on a case-by-case basis and if valid submit the request to the Commissioners Court for authorization and determination of the appropriateness of each request as well as amount and duration of increase. Contractors will not be permitted any additional compensation for mark-ups or profits based on the increase in price. Rather, such additional compensation will be limited to the actual increase in original cost to the Contractor as such increase is reflected by the original cost stated in the bid. But in no event will the amount of additional compensation exceed 25% increase in Contractor's original cost for the product as such cost is reflected in Contractor's original proposal or the duration exceed a period of sixty (60) calendar days. In addition should the cost, during the period of the pass through, return to normal or decrease to below pre pass through prices, appropriate downward adjustments shall be made. No more than one pass through adjustment will be permitted per year.

15. MODIFICATION OF PROPOSALS

A proposer may modify a proposal by letter at any time prior to the submission deadline for receipt of proposals. Modification requests must be received by the Purchasing Agent prior to the submission deadline. Modifications made before opening time must be initialed by proposer guaranteeing authenticity. Proposals may not be amended or altered after the official opening with the single exception that any product literature and/or supporting data required by the actual specifications, if any, will be accepted at any time prior to the Commissioners Court considering of same.

GENERAL PROVISIONS – REQUEST FOR PROPOSAL
BOLIVAR BEACH PAVILION
GALVESTON COUNTY, TEXAS

16. PRE-PROPOSAL CONFERENCE

A pre-proposal conference for the purpose of discussing contract requirements and answering questions of prospective proposers may be conducted in this procurement. A pre-proposal conference may be mandatory or voluntary. If the pre-proposal conference is mandatory, then the County is authorized to condition acceptance of a proposal on compliance with attendance. The Special Provisions of this procurement shall specify if a pre-proposal conference is to be held and shall specify whether the pre-proposal conference is mandatory or voluntary. Regardless of whether the pre-proposal conference is mandatory or voluntary, only a principal, officer, or employee of the proposer may represent the proposer at the pre-proposal conference and no person may represent more than one proposer at the pre-proposal conference.

17. SIGNATURE OF PROPOSALS

Each proposal shall give the complete name of the proposer and the mailing address of the proposer and be signed by an authorized representative by original signature with the authorized representative's name and legal title typed below the signature line. Each proposal shall include the proposer's Federal Employer Identification Number (FEIN). Failure to sign the Contract page(s) and proposal response sheets may disqualify the proposal from being considered by the County. The person signing on behalf of the proposer expressly affirms that the person is duly authorized to tender the proposal on behalf of the proposer and to sign the proposal sheets and contract under the terms and conditions of this Request for Proposal and to bind the proposer hereto and further understands that the signing of the contract shall be of no effect until it is properly placed on the Commissioners Court agenda, approved in open Court, authorized to be executed by the County Judge, and fully executed by both parties.

18. AWARD OF PROPOSALS – EVALUATION CRITERIA AND FACTORS

The award will be made to the responsible proposer whose proposal is determined to be the lowest and best evaluated offer demonstrating the best ability to fulfill the requirements set forth in this Request for Proposal. **The proposed cost to the County will be considered firm and cannot be altered after the submission deadline, unless the County invokes its right to request a best and final offer.**

"Lowest and best" means a bid or offer providing the best value considering associated direct and indirect costs, including transport, maintenance, reliability, life cycle, warranties, and customer service after a sale.

In determining the lowest and best bid for a contract for the purchase of earth-moving, material-handling, road maintenance, or construction equipment, the Commissioners Court may also consider the information submitted under Section 262.0255 of the Local Government Code; and in determining the lowest and best bid for a contract for the purchase of road construction material, the Commissioners Court may consider the pickup and delivery locations of the bidders and the cost to the county of delivering or hauling the material to be purchased. The Commissioners Court may award contracts for the purchase of road construction material to more than one bidder if each of the selected bidders submits the lowest and best bid for a particular location or type of material.

Each proposer, by submitting a proposal, agrees that if its' proposal is accepted by the Commissioners Court, the proposer will furnish all items and services upon which prices have been tendered and upon the terms and conditions in this proposal, including but not limited to the best and final offer if applicable, and the contract.

The contractor shall commence work only after the transmittal of a fully executed contract and after receiving written notification to proceed from the County Purchasing Agent. The contractor will perform all services indicated in the proposal in compliance with this contract.

Neither department heads nor elected officials are authorized to sign any binding contracts or agreements prior to being properly placed on the Commissioners' Court agenda and approved in open court. Department heads and other

GENERAL PROVISIONS – REQUEST FOR PROPOSAL
BOLIVAR BEACH PAVILION
GALVESTON COUNTY, TEXAS

elected officials are not authorized to enter into any type of agreement or contract on behalf of Galveston County. Only the Commissioners Court, acting as a body, may enter into a contract on behalf of the County. Additionally, department heads and other elected officials are not authorized to agree to any type of supplemental agreements or contracts for goods or services. Supplemental agreements are subject to review by the County Legal Department prior to being signed by the County's authorized representatives.

The County of Galveston reserves the right to accept proposals on individual items listed, or group items, or on the proposal as a whole; to reject any and all proposals; to waive any informality in the proposals; to disregard proposals that are not submitted timely; to disregard the proposals of proposers determined to be not responsible; and to accept the proposal that appears to be in the best interest of the County. The selection process may, however, include a request for additional information or an oral presentation to support the written proposal.

In determining and evaluating the best proposal , the pricing may not necessarily be controlling, but quality, equality, efficiency, utility, general terms, delivery, suitability of the service offered, and the reputation of the service in general use will also be considered along with any other relevant items. The Commissioners Court shall be the sole judge in the determination of these matters.

The County reserves the right to reject any or all proposals in whole or in part received by reason of this Request for Proposal and may discontinue its efforts under this Request for Proposal for any reason or no reason or solely for the County's convenience at any time prior to actual execution of the contract by the County.

A Proposer whose proposal does not meet the mandatory requirements set forth in this request for proposal will be considered non-compliant.

The invitation to submit a proposal which appears in the newspaper, or other authorized advertising mediums, these general provisions, the specifications which follow, the proposal sheets, and any addenda issued are all considered part of the proposal.

Each proposer, by submitting a proposal, agrees that if its proposal is accepted by the Commissioners Court, such proposer will furnish all items and services upon the terms and conditions in this request for proposal and the resultant contract.

Notice of contract award is anticipated to be made within ninety (90) days of opening of proposals to the lowest responsive and responsible contractor, whose proposal complies with all the requirements in the request for proposal.

Contractor shall submit to the County, for approval, within ten (10) days from notice of contract award, all Certificates of Insurance evidencing the required coverage as described under Section 37, Requirement of and Proof of Insurance, or if different, then as described within the Special Provisions or resultant contract.

The contractor shall not commence work under these terms and conditions of the contract until all applicable Purchase Orders, Certificates of Insurance, Performance and Payment Bonds, and Irrevocable Letters of Credit (if required) have been approved by the County of Galveston and the Contractor has received notice to proceed in writing and an executed copy of the contract from the County Purchasing Agent.

19. DISPUTE AFTER AWARD/PROTEST

Any actual or prospective Proposer who is allegedly aggrieved in connection with this procurement or award of a contract resulting therefrom may protest. The protest shall be submitted in writing to the Purchasing Agent within seven (7) calendar days after such aggrieved person knows of or should have known of the facts giving rise thereto. If the protest is not resolved by mutual agreement, the Purchasing Agent will promptly issue a decision in writing to the

GENERAL PROVISIONS – REQUEST FOR PROPOSAL
BOLIVAR BEACH PAVILION
GALVESTON COUNTY, TEXAS

protestant. If the protestant wishes to appeal the decision rendered by the Purchasing Agent, such appeal must be made to the Commissioners Court through the Purchasing Agent. The decision of the Commissioners Court will be final. The Commissioners Court need not consider protests unless this procedure is followed.

20. PUBLIC INFORMATION ACT (f/k/a Open Records Act)

The proposer acknowledges that the County is a government body for purposes of the Public Information Act, codified as Chapter 552 of the Texas Government Code, and as such is required to release information in accordance with the provisions of the Public Information Act.

If proposer considers any of its submitted information to be proprietary in nature, trade secret, or otherwise confidential, then it must clearly and conspicuously mark such information as proprietary, trade, secret, or confidential. By the submission of its proposal, proposer expressly affirms that it has clearly and conspicuously marked any information within its submission that proposer considers confidential, proprietary, and/or trade secret.

In the event the County receives a request for information under the Public Information Act seeking information that the proposer has marked as confidential, proprietary, and /or trade secret, then the County agrees that it shall provide notice to the proposer of the request for information and the request for decision process under the Public Information Act. Thus, the County will submit the initial correspondence to the Texas Attorney General – however, the burden is and shall be on the proposer to submit correspondence to the Attorney General if the proposer wishes its information to be withheld. Proposer is deemed to have knowledge of the Public Information Act. **By the submission of its proposal, proposer expressly acknowledges that the burden to withhold its' information from public disclosure lays with the proposer;** thus, proposer further acknowledges and agrees that it shall submit comments to the Texas Attorney General in the request for decision process if proposer wishes to have its' information withheld from public disclosure.

21. PROPOSER'S E-MAIL ADDRESSES – CONSENT TO DISCLOSURE

Notwithstanding the foregoing Section 20, proposer acknowledges and agrees that the confidentiality of any and all email addresses proposer uses or discloses in communicating with the County are **open** to the public in accordance with Section 552.137 of the Government Code and proposer consents to the release of its email addresses.

22. RESULTANT CONTRACT

Proposer shall correctly and fully execute the resultant contract first. After this, the contract shall be set for consideration by the Commissioners Court. If the Commissioners Court authorizes the execution of the contract, the resultant contract shall become effective upon the Commissioners Court execution of same, provided that the contract is executed by all parties to the contract. Contract documents shall consist of the contract, the General and Special Provisions, drawings, proposal package (including best and final offer(s) if such is utilized), any addenda issued, and any change orders issued during the work. If applicable to the attached proposal, proposer must sign three (3) original contracts and return all three with their proposal submittal.

Proposer should submit a proposed contract with its proposal or its sample material terms and conditions for review and consideration.

GENERAL PROVISIONS – REQUEST FOR PROPOSAL
BOLIVAR BEACH PAVILION
GALVESTON COUNTY, TEXAS

23. CONTRACT TERM

The term of the resultant contract will begin on the date of full execution or the execution by the Commissioners Court, whichever is later, and will terminate on the date specified in the resultant contract unless terminated earlier as herein set forth.

24. TERMINATION FOR DEFAULT

Failure of either party in the performance of any of the provisions of this contract shall constitute a breach of contract, in which case either party may require corrective action within ten (10) business days from date of receipt of written notice citing the exact nature of such breach. Failure of the party being notified to take corrective action within the prescribed ten (10) business days, or failure to provide written reply of why no breach has occurred, shall constitute a Default of Contract.

All notices relating to default by proposer of the provisions of the contract shall be issued by the County through its Legal Department, and all replies shall be made in writing to the County Legal Department. Notices issued by or issued to anyone other than the County Legal Department shall be null and void and shall be considered as not having been issued or received.

Galveston County reserves the right to enforce the performance of this contract in any manner prescribed by law in the event of breach or default of this contract, and may contract with another party, with or without solicitation of proposals or further negotiations. At a minimum, proposer shall be required to pay any difference in service or materials, should it become necessary to contract with another source, plus reasonable administrative costs and attorney fees.

In the event of Termination for Default, Galveston County, its agents or representatives shall not be liable for loss of any profits anticipated to be made by proposer.

In addition to the remedies stated herein, the County has the right to pursue other remedies permitted by law or in equity.

No waiver by either party of any event of default under this agreement shall operate as a waiver of any subsequent default under the terms of this agreement.

County reserves the right to terminate this contract immediately in the event proposer:

A. Fails to meet delivery or completion schedules; and/or
B. Fails to otherwise perform in accordance with the accepted proposal and the contract.

25. TERMINATION FOR CONVENIENCE

County may terminate this contract upon at least thirty (30) calendar days prior written notice for its convenience or for any reason deemed by the County to serve the public interest. As well, County may terminate this contract upon thirty (30) calendar days prior written notice for any reason resulting from any governmental law, order, ordinance, regulation, or court order. In no event shall County be liable for loss of any profits anticipated to be made hereunder by proposer should this contract be terminated early.

GENERAL PROVISIONS – REQUEST FOR PROPOSAL
BOLIVAR BEACH PAVILION
GALVESTON COUNTY, TEXAS

26. FORCE MAJEURE

If by reason of Force Majeure either Party shall be rendered unable, wholly or in part, to carry out its responsibilities under this contract by any occurrence by reason of Force Majeure, then the Party unable to carry out its responsibility shall give the other Party notice and full particulars of such Force Majeure in writing within a reasonable time after the occurrence of the event, and such notice shall suspend the Party's responsibility for the continuance of the Force Majeure claimed, but for no longer period.

Force Majeure means acts of God, floods, hurricanes, tropical storms, tornadoes, earthquakes, or other natural disasters, acts of a public enemy, acts of terrorism, sovereign conduct, riots, civil commotion, strikes or lockouts, and other causes that are not occasioned by either Party's conduct which by the exercise of due diligence the Party is unable to overcome and which substantially interferes with operations.

27. ESTIMATED QUANTITIES

Any reference to quantities shown in the request for proposal is an estimate only. Since the exact quantities cannot be predetermined, the County reserves the right to adjust quantities as deemed necessary to meet its requirements.

28. CONTRACTOR INVESTIGATION

Before submitting a proposal, each proposer shall make all investigations and examinations necessary to ascertain all site conditions and requirements affecting the full performance of the contract and to verify any representations made by the County upon which the contractor will rely. Proposer shall exercise due diligence and is further charged with knowledge of the local, State, and Federal laws, rules, and regulations applicable to this contract. If the proposer receives an award as a result of its proposal submission in this procurement, the proposer's failure to have made such investigations and examinations will in no way relieve the proposer from its obligation to comply in every detail with all provisions and requirements of the contract, nor will a plea of ignorance of such conditions and requirements be accepted as a basis for any claim whatsoever by the contractor for additional compensation and/or for excused nonperformance.

29. NO COMMITMENT BY COUNTY OF GALVESTON

This request for procurement does not commit the County of Galveston to award any costs or pay any costs, or to award any contract, or to pay any costs associated with or incurred in the preparation of a proposal in response to this request for proposal and does not commit the County of Galveston to procure or contract for services or supplies.

30. PROPOSAL COSTS BORNE BY PROPOSER

Galveston County shall not be liable for any costs incurred by proposer in preparation, production, or submission of a proposal, including but not limited to best and final offer if applicable. As well, Galveston County shall not be liable for any work performed by proposer prior to issuance of fully executed contract and properly issued notice to proceed. Galveston County shall not be liable for any costs incurred by proposer by reason of attending a pre-proposal conference. Galveston County shall not be liable for any costs incurred by proposer by reason of the County invoking use of best and final offers.

GENERAL PROVISIONS – REQUEST FOR PROPOSAL
BOLIVAR BEACH PAVILION
GALVESTON COUNTY, TEXAS

31. BEST AND FINAL OFFERS (BAFO)

In acceptance of proposals, the County reserves the right to negotiate further with one or more of the proposers as to any features of their proposals and to accept modifications of the work and price when such action will be in the best interest of the County. This includes, but is not limited to, the solicitation of a Best and Final Offer from one or more of the proposers. If a Best and Final Offer is invoked, this allows acceptable proposers the opportunity to amend, change, or supplement their original proposal. Proposers may be contacted in writing by the Purchasing Agent, requesting that they submit their Best and Final Offer. Any such Best and Final Offer must include discussed and negotiated changes.

32. SINGLE PROPOSAL RESPONSE

If only one proposal is received in response to the request for proposal, a detailed cost proposal may be requested of the single proposer. A cost/price analysis and evaluation and/or audit may be performed of the cost proposal in order to determine if the price is fair and reasonable.

33. CHANGES IN SPECIFICATIONS

If it becomes necessary to revise any part of this proposal, a written notice of such revision will be provided to all proposers in the form of addenda. The County is not bound by any oral representations, clarifications, or changes made in the written specifications by the County's employees or officials, unless such clarification or change is provided to proposers in a written addendum from the Purchasing Agent. Proposers are advised to inquire prior to the submission deadline as to whether any addenda to this request for proposal have been issued, as the successful proposer will be required to abide by such addenda.

The County of Galveston reserves the right to revise or amend the specifications up to the time set for opening of proposals. Such revisions and amendments, if any, shall be announced by form of addenda. Copies of such addenda (or addendum in the event only one addendum is issued in the procurement) shall be furnished to all prospective contractors. Prospective contractors are defined as those contractors listed on the County's request for proposal list for this material/service or those who have obtained documents from the Purchasing Agent's Office subsequent to the advertisement. If revisions and amendments require changes in quantities or prices proposed, or both, the date set for opening of proposals may be postponed by such number of days as in the opinion of the County shall enable prospective contractors to revise their proposals. In any case, the proposal opening shall be at least seven (7) business days after the last revising or amendment addendum and the addendum shall include an announcement of the new date, if applicable, for the opening of proposals.

34. PROPOSAL IDEAS AND CONCEPTS

The County reserves to itself the right to adopt or use for its benefit, any concept, plan, or idea contained in any proposal.

35. PROPOSAL DISCLOSURES

While this procurement is pending, the names of those who submitted proposals will not be made public unless in conformity with the County Purchasing Act. Likewise, no pricing, staffing, or other contents of the proposal information will be released unless in conformity with the County Purchasing Act. Proposers are requested to withhold all inquiries regarding their proposal or other submissions until after an award is made. No communication is to be had with any County employee or official, other than the County Purchasing Agent, regarding whether a proposal was received - violations of this provision may result in the rejection of a proposal.

GENERAL PROVISIONS – REQUEST FOR PROPOSAL
BOLIVAR BEACH PAVILION
GALVESTON COUNTY, TEXAS

36. INDEMNIFICATION

The contractor shall agree to assume all risks and responsibility for, and agrees to indemnify, defend, and save harmless, the County of Galveston, its elected and appointed officials and department heads, and its agents and employees from and against all claims, demands, suits, actions, recoveries, judgments, and costs and expenses including reasonable attorney's fees for the defense thereof in connection therewith on account of the loss of life, property or injury or damage to the person which shall arise from contractor's operations under this contract, its use of County facilities and/or equipment or from any other breach on the part of the contractor, its employees, agents or any person(s), in or about the County's facilities with the expressed or implied consent of the County. Contractor shall pay any judgment with cost which may be obtained against Galveston County resulting from contractor's operations under this contract.

Contractor agrees to indemnify and hold the County harmless from all claims of subcontractors, laborers incurred in the performance of this contract. Contractor shall furnish satisfactory evidence that all obligations of this nature herein above designated have been paid, discharged or waived. If Contractor fails to do so, then the County reserves the right to pay unpaid bills of which County has written notice direct and withhold from Contractor's unpaid compensation a sum of money reasonably sufficient to liquidate any and all such lawful claims.

37. REQUIREMENT OF AND PROOF OF INSURANCE

The successful proposer shall furnish evidence of insurance to the County Purchasing Agent and shall maintain such insurance as required hereunder or as may be required in the Special Provisions or resultant contract, if different. Contractor shall obtain and thereafter continuously maintain in full force and effect, commercial general liability insurance, including but not limited to bodily injury, property damage, and contractual liability, with combined single limits as listed below or as may be required by State or Federal law, whichever is greater.

A. For damages arising out of bodily injury to or death of one person in any one accident :
ONE HUNDRED THOUSAND AND NO/100 ($100,000.00) DOLLARS.

B. For damages arising out of bodily injury to or death of two or more persons in any one accident:
THREE HUNDRED THOUSAND AND NO/100 ($300,000.00) DOLLARS.

C. For any injury to or destruction of property in any one accident :
ONE HUNDRED THOUSAND AND NO/100 ($100,000.00) DOLLARS.

Insurance shall be placed with insurers having an A.M. Best's rating of no less than A. Such insurance must be issued by a casualty company authorized to do business in the State of Texas, and in standard form approved by the Board of Insurance Commissioners of the State of Texas, with coverage provisions insuring the public from loss or damage that may arise to any person or property by reason of services rendered by Contractor.

Galveston County shall be listed as the additional insured on policy certificates and shall be provided with no less than thirty (30) calendar days prior notice of any changes to the policy during the contractual period.

Certificates of Insurance, fully executed by a licensed representative of the insurance company written or countersigned by an authorized Texas state agency, shall be filed with the County Purchasing Agent within ten (10) business days of issuance of notification from the County Purchasing Agent to proposer that the contract is being

activated as written proof of such insurance and further provided that proposer shall not commence work under this contract until it has obtained all insurance required herein, provided written proof as required herein, and received written notice to proceed issued from the County Purchasing Agent.

Proof of renewal/replacement coverage shall be provided prior to the expiration, termination, or cancellation date of any policy and Galveston County shall be named as an additional insured on any such renewal/replacement coverage and a certificate of insurance showing such shall be provided to the Purchasing Agent. Said insurance shall not be cancelled, permitted to expire, or changed without at least thirty (30) days prior written notice to the County.

Insurance required herein shall be maintained in full force and effect during the life of this contract and shall be issued on an occurrence basis. Contractor shall require that any and all subcontractors that are not protected under the Contractor's own insurance policies take and maintain insurance of the same nature and in the same amounts as required of Contractor and provide written proof of such insurance to Contractor. Proof of renewed/replacement coverage shall be provided prior to the expiration, termination, or cancellation date of any policy. Contractor shall not allow any subcontractor to commence work on the subcontract until such insurance required for the subcontractor has been obtained and approved.

Workers' Compensation Insurance: Successful proposer shall carry in full force Workers' Compensation Insurance Policy(ies), if there is more than one employee, for all its' employees, including but not limited to full time, part time, and emergency employees employed by the successful proposer. Current insurance certificates certifying that such policies as specified above are in full force and effect shall be furnished by successful proposer to the County.

Insurance is to be placed with insurers having a Best rating of no less than A. The proposer shall furnish the County with certificates of insurance and original endorsements affecting coverage required by these insurance clauses within ten (10) business days of receiving notification from the County Purchasing Agent that the contract is being activated. The certificates and endorsements for each insurance policy are to be signed by a person authorized by the insurer to bind coverage on its behalf. The proposer shall be required to submit annual renewals for the term of this contract prior to expiration of any policy.

In addition to the remedies stated herein, the County has the right to pursue other remedies permitted by law or in equity.

The County agrees to provide proposer with reasonable and timely notice of any claim, demand, or cause of action made or brought against the County arising out of or related to utilization of the property. Proposer shall have the right to defend any such claim, demand, or cause of action at its sole cost and expense and within its sole and exclusive discretion. The County agrees not to compromise or settle any claim or cause of action arising out of or related to the utilization of the property without the prior written consent of the proposer.

In no event shall the County be liable for any damage to or destruction of any property belonging to the proposer.

Subrogation Waiver. Proposer and proposer's insurance carrier waive any and all rights to subrogation against Galveston County in regard to any suit or claim arising out of personal injury or property damage resulting from proposer's performance under this agreement.

38. PROPOSAL GUARANTEE

Unless specified differently within the Special Provisions of this procurement, each proposer shall be required to submit a proposal guarantee with its proposal as required within this Section.

Evidencing its firm commitment to engage in contract if proposer is selected for award of contract, each proposer is required to furnish with their bid a cashier's check or an acceptable proposer's bond (generally, a bid bond) in the amount of five percent (5%) of the total contract price. If proposer is using a bond, then the bond must be executed

with a surety company authorized to do business in the State of Texas. Failure to furnish the proposal guarantee in the proper form and amount, by the time set for opening of proposals may be cause for rejection of the proposal.

The cashier's check or proposer bond (as applicable) will be returned to each respective unsuccessful proposer(s) subsequent to the Commissioners Court award of contract, and shall be returned to the successful proposer upon the completion and submission of all contract documents. Provided however, that the cashier's check or proposer bond will be forfeited to the County as liquidated damages should successful proposer fail to execute the contract within thirty (30) days after receiving notice of the acceptance of its proposal.

39. PERFORMANCE AND PAYMENT BONDS (if required)

Successful proposer, before beginning work, shall execute a performance bond and a payment bond, each of which must be in the amount of the contract. The required payment and performance bonds must each be executed by a corporate surety authorized to write surety bonds in the State of Texas and in accordance with Chapter 3503 of the Insurance Code (codified in 2005 and originally within Section 1, Chapter 87, Acts of the 56th Leg., R.S., 1959, and in Article 7.19-1, Vernon's Texas Insurance Code).

The performance and payment bonds must each clearly and prominently display on the bond or on an attachment to the bond:

a.) The name, mailing address, physical address, and telephone number, including the area code, of the surety company to which any notice of claim should be sent; or

b.) The toll-free telephone number maintained by the Texas Department of Insurance under Subchapter B, Chapter 521, Insurance Code, and a statement that the address of the surety company to which any notice of claim should be sent may be obtained from the Texas Department of Insurance by calling the toll free-telephone number.

The performance bond shall be solely for the protection of Galveston County, in the full amount of the contract, and conditioned on the faithful performance of the work in accordance with the plans, specifications, and contract documents. The payment bond is solely for the protection and use of payment bond beneficiaries who have a direct contractual relationship with the prime contractor or a subcontractor to supply labor or material, and in the amount of the contract.

The payment and performance bonds required to be furnished herein must be furnished before the contractor begins work and are a requirement for issuance of a Notice to Proceed. Such bonds must be furnished to the Galveston County Purchasing Agent within thirty (30) calendar days after the date of the full execution of the contract or, if applicable, as required under Chapter 2253, Government Code, whichever is earlier. Contractor's failure to provide the required payment and performance bonds within such time period shall constitute an event of default under this contract. Contractor shall not commence work until all applicable certificates of insurance, performance bonds, and payment bonds have been received and approved by the County Purchasing Agent and the Contractor receives notice to proceed in writing that has been issued by the County Purchasing Agent.

Additionally, if this request for proposal is for the award of a public works contract, then compliance with Chapter 2253 of the Texas Government Code, which is known as the McGregor Act, is mandatory. Performance and payment bonds are required to be furnished in accordance with Chapter 2253 of the Texas Government Code. Proposer should familiarize itself with the entire provisions of Chapter 2253 of the Texas Government Code.

40. PATENT AND COPYRIGHT PROTECTION

The proposer agrees at its sole expense to protect the County from claims involving infringement of patents, copyright, trademark, trade secret, or other intellectual property rights. **Proposer shall indemnify and save harmless**

GENERAL PROVISIONS – REQUEST FOR PROPOSAL
BOLIVAR BEACH PAVILION
GALVESTON COUNTY, TEXAS

the County of Galveston, its officers, employees, and agents, from liability of any nature and kind whatsoever, including without limitation cost and expenses, for or on account of any copyrighted, trademarked, trade secret, patented or un-patented invention, process, or article manufactured or used in the performance of the contract, or other intellectual property rights, including its use by the County. Proposer also agrees that if proposer is awarded this contract, that no work performed hereunder shall be subject to patent, copyright, or other intellectual property by proposer.

41. CONFLICT OF INTEREST DISCLOSURE REPORTING (FORM CIQ)

Proposer may be required under Chapter 176 of the Texas Local Government Code to complete and file a conflict of interest questionnaire (CIQ Form). The CIQ Form pertains to business relationship, gift giving and family relationship reporting. If proposer is required to file a CIQ Form, then the completed CIQ Form must be filed with the County Clerk of Galveston County, Texas.

Business relationship. If proposer has an employment or other business relationship with a local government officer of Galveston County or with a family member of a local government officer of Galveston County that results in the officer or family member of the officer receiving taxable income that exceeds $2,500.00 during the preceding 12-month period, then proposer **MUST** complete a CIQ Form and file the original of the CIQ Form with the County Clerk of Galveston County.

Gift-giving. If proposer has given a local government officer of Galveston County or a family member of a local government officer of Galveston County one or more gifts with an aggregate value of more than one-hundred dollars ($100.00) during the preceding 12-months, then proposer **MUST** complete a CIQ Form and file the original of the CIQ Form with the County Clerk of Galveston County.

Family member. For purposes of the business relationship and gift giving reporting requirements, a "family member" means a person related to another person with the first degree of consanguinity or affinity, as described by Subchapter B, Chapter 573, Texas Government Code. Examples of persons within the first degree by consanguinity or affinity include a son, daughter, father, mother, spouse, son-in-law, daughter-in-law, father-in-law, mother-in-law, stepson, stepdaughter, stepmother, and stepfather.

Family relationship. If proposer has a "family relationship" with a local government officer of Galveston County then proposer **MUST** complete a CIQ Form and file the original of the CIQ Form with the County Clerk of Galveston County, regardless of whether proposer has a business relationship or has given gifts to the local government officer or a family member of the local government officer. For this purpose, "family relationship" means proposer is related within the third degree by consanguinity or the second degree by affinity, as those terms are defined under Chapter 573 of the Texas Government Code, to a local government officer of Galveston County. Examples of such relationships include a son, daughter, mother, father, brother, sister, grandchild, great-grandchild, grandparent, great-grandparent, niece, nephew, uncle, aunt, spouse, mother-in-law, father-in-law, daughter-in-law, son-in-law, spouse's grandchild, spouse's grandparent, grandparent's spouse, grandchild's spouse, stepson, stepdaughter, stepmother, and stepfather.

Proposer must file its original CIQ Form with the Galveston County Clerk. The Galveston County Clerk has offices at the following locations:

Galveston County Clerk
Galveston County Justice Center, Suite 2001
600 59th Street
Galveston, Texas 77551

GENERAL PROVISIONS – REQUEST FOR PROPOSAL
BOLIVAR BEACH PAVILION
GALVESTON COUNTY, TEXAS

Galveston County Clerk
North County Annex, 1st Floor
174 Calder Road
League City, Texas 77573

Again, if proposer is required to file a CIQ Form, the original completed form is filed with the Galveston County Clerk (**not the Purchasing Agent**).

For proposer's convenience, a blank CIQ Form is enclosed with this proposal package. Blank CIQ Form(s) may also be obtained by visiting the Purchasing Agent's website – this website is linked from the Galveston County homepage, at http://www.co.galveston.tx.us.

Chapter 176 specifies deadlines for the filing of CIQ Forms (both initial filings and updated filings).

It is proposer's sole responsibility to file a true and complete CIQ Form with the Galveston County Clerk if proposer is required to file by the requirements of Chapter 176 of the Local Government Code. Proposer is advised that it is an offense to fail to comply with the disclosure reporting requirements dictated under Chapter 176 of the Texas Local Government Code, and the failure to file may be grounds to void the contract, if proposer is awarded a contract.

If proposer has any questions about compliance with Chapter 176, proposer may wish to consult its' legal counsel. Compliance is the individual responsibility of each person, business, and agent who is subject to Chapter 176 of the Texas Local Government Code.

42. DISCLOSURE OF INTERESTED PARTIES/FORM 1295

Under Section 2252.908 of the Government Code, any business entity that enters into a contract with Galveston County that requires the approval of the Commissioners Court must submit a "Disclosure of Interested Parties" to the County prior to the execution of the contract. This form, the "Disclosure of Interested Parties" form was promulgated by the Texas Ethics Commission, and is the "Form 1295". **This procurement is subject to these requirements.**

The Texas Ethics Commission was charged with promulgating rules to implement Section 2252.908 of the Government Code. The rules adopted by the Texas Ethics Commission are located at Sections 46.1, 46.3, and 46.5 of Title 1 of the Texas Administrative Code. Thus, the law covering these requirements is located at Section 2252.908 of the Government Code, and in Title 1, Sections 46.1, 46.3, and 46.5 of the Texas Administrative Code.

The Texas Ethics Commission's website is: www.ethics.state.tx.us. The area of the Texas Ethics Commission website pertaining to Form 1295 is:

www.ethics.state.tx.us/whatsnew/elf_info_form1295.htm.

Form 1295 must be completed electronically through the Texas Ethics Commission website (handwritten forms are not allowable). Once the business entity has completed their electronic filing of Form 1295, then the business entity must print out the electronically completed form, and sign and notarize the Form 1295. Once Form 1295 is signed and notarized, the business entity must submit their completed, signed, and notarized Form 1295 to the Galveston County Purchasing Agent.

Successful Proposer is and shall be subject to these requirements, and no resultant contract may be executed by the Commissioners Court until the completed, signed, and notarized Form 1295 is on file with the County Purchasing Agent.

GENERAL PROVISIONS – REQUEST FOR PROPOSAL
BOLIVAR BEACH PAVILION
GALVESTON COUNTY, TEXAS

No portion of the Form 1295 process commits the County to any type of award of contract whatsoever.

After the Purchasing Agent's Office receives the completed, signed, and notarized Form 1295, the Purchasing Agent's Office will, within 30 days, go the Texas Ethics Commission website to submit electronic confirmation of the County's receipt of the completed, signed, and notarized Form 1295.

43. CERTIFICATION REGARDING DEBARMENT, SUSPENSION, PROPOSED DEBARMENT, AND OTHER RESPONSIBILITY MATTERS & REQUIREMENT TO REGISTER IN SAM

Proposer certifies that neither it, nor any of its Principals, are presently debarred, suspended, proposed for debarment, disqualified, excluded, or in any way declared ineligible for the award of contracts by any Federal agency. Contractor agrees that it shall refund Galveston County for any payments made to Contractor while ineligible. Contractor acknowledges that Contractor's uncured failure to perform under this Agreement, if such should occur, may result in Contractor being debarred from performing additional work for the County, the respecting State Agency administering the grant funding the contract, if applicable, the State, FEMA or HUD (as applicable), and other Federal and State entities. Further, proposer has executed the Certification Regarding Debarment, Suspension, Proposed Debarment, and Other Responsibility Matters and returned the fully completed and executed original certification with the submission of its proposal. **The truthful and fully completed and executed original of the Certification Regarding Debarment, Suspension, Proposed Debarment, and Other Responsibility Matters <u>must</u> be included with the submission of proposer's proposal and is a mandatory requirement of this request for proposal. Proposer's failure to include the fully completed and executed original of this Certification shall be considered non-compliance with the requirements of this request for proposal and grounds for the rejection of proposer's proposal.** Proposer shall immediately notify the County Purchasing Agent if it becomes debarred or suspended, placed on the Consolidated List of Debarred Contractors, or in any other way becomes ineligible for award of contract by any Federal agency. This Certification is a material fact relied upon by Galveston County; if it is later determined that the contractor did not comply with 2 C.F.R. Part 180 and 2 C.F.R. Part 3000, in additional to the remedies available to Galveston County and the State agency administering this grant, the Federal Government may pursue available remedies, including but not limited to suspension and/or debarment of contractor.

If the contract to be awarded pursuant to this procurement involves the use of Federal funds, then proposer must also be registered in the Federal Contractor Registry through the System for Award Management (SAM) to be eligible for award of contract pursuant to this procurement.

Information regarding the SAM is available at:

http://www.federalcontractorregistry.com/?gclid=CIG1hf2rr8wCFYkCaQoducANZw or at https://www.sam.gov/portal/SAM/#1.

No contract involving the use of Federal funds may be awarded to any proposer unless and until such registration is current and in good standing under SAM. Successful proposer must maintain SAM registration throughout the entire term of the agreement with the County. If this contract involves the use of Federal funds, then proposer must enclose proof of such SAM registration within its response, which is also a mandatory requirement of this procurement; failure to enclose such proof shall be considered non-compliance with the requirements of this procurement and grounds for the rejection of proposer's response to this procurement (i.e., bid, proposal, or qualifications statement, as applicable).

GENERAL PROVISIONS – REQUEST FOR PROPOSAL
BOLIVAR BEACH PAVILION
GALVESTON COUNTY, TEXAS

44. SOVEREIGN IMMUNITY

The County specifically reserves any claim it may have to sovereign, qualified, or official immunity as a defense to any action arising in conjunction with this contract.

45. CONTROLLING LAW AND VENUE

Proposer acknowledges and agrees that the contract is and shall be governed and construed by the laws of the State of Texas and that venue shall lie exclusively in a court of competent jurisdiction in Galveston County, Texas.

46. MERGERS, ACQUISITIONS

The Proposer shall be required to notify the County of any potential for merger or acquisition of which there is knowledge at the time that a proposal is submitted.

If subsequent to the award of any contract resulting from this request for proposal the proposer shall merge or be acquired by another firm, the following documents must be submitted to the County:

A. Corporate resolutions prepared by the awarded Bidder and the new entity ratifying acceptance of the original contract, terms, conditions and prices;
B. New proposer's Federal Identification Number (FEIN); and
C. New proposer's proposed operating plans.

Moreover, proposer is required to provide the County with notice of any anticipated merger or acquisition as soon as proposer has actual knowledge of the anticipated merger or acquisition. The New Proposer's proposed plan of operation must be submitted prior to merger to allow time for submission of such plan to the Commissioners' Court for its approval.

47. DELAYS

The County reserves the right to delay the scheduled commencement date of the contract if it is to the advantage of the County. There shall be no additional costs attributed to these delays should any occur. Proposer agrees it will make no claims for damages, for damages for lost revenues, for damages caused by breach of contract with third parties, or any other claim by proposer attributed to these delays, should any occur. In addition, proposer agrees that any contract it enters into with any third party in anticipation of the commencement of the contract will contain a statement that the third party will similarly make no claim for damages based on delay of the scheduled commencement date of the contract.

48. ACCURACY OF DATA

Information and data provided through this request for proposal are believed to be reasonably accurate.

49. SUBCONTRACTING/ASSIGNMENT

Proposer shall not assign, sell, or otherwise transfer its contract in whole or in part without prior written permission of the County acting by and through its Commissioners' Court. Such consent, if granted, shall not relieve the proposer of any of its responsibilities under this contract.

GENERAL PROVISIONS – REQUEST FOR PROPOSAL
BOLIVAR BEACH PAVILION
GALVESTON COUNTY, TEXAS

50. INDEPENDENT CONTRACTOR

Proposer expressly acknowledges that it is an independent contractor. Nothing in this agreement is intended nor shall be construed to create an agency relationship, an employer/employee relationship, a joint venture relationship, or any other relationship allowing County to exercise control or direction over the manner or method by which proposer or proposer's subcontractors perform in providing the requirements stated in the request for proposal.

51. MONITORING PERFORMANCE

The County shall have the unfettered right to monitor and audit the proposer's work in every respect. In this regard, the proposer shall provide its full cooperation and insure the cooperation of its employees, agents, assigns, and subcontractors. Further, the proposer shall make available for inspection and/or copying when requested, original data, records, and accounts relating to the proposer's work and performance under this contract. In the event any such material is not held by the proposer in its original form, a true copy shall be provided.

52. SUBJECT TO APPROPRIATION OF FUNDS

State law prohibits the obligation and expenditure of public funds beyond the fiscal year for which a budget has been approved by the Commissioners Court. Galveston County anticipates this to be an integral part of future budgets to be approved during the periods of this contract, except for unanticipated needs or events which may prevent such payments against this contract. However, Galveston County cannot guarantee the availability of funds, and enters into this contract only to the extent such funds are made available through appropriation (allocation) by the Commissioners Court. This contract shall not be construed as creating any debt on behalf of the County of Galveston in violation of TEX. CONST. art. XI, § 7, and it is understood that all obligations of Galveston County are subject to the availability of funds.

53. CONTRACTS SUBJECT TO GRANT FUNDING

Notwithstanding the foregoing, if the contract to be awarded by this procurement is funded with Federal or State grant funds, the proposer acknowledges that the obligations of the County under the contract are contingent upon the continued availability of grant funding to meet the County's obligations. If the grant(s) to the County is reduced, de-obligated, or otherwise discontinued or terminated, Contractor agrees that the County may immediately terminate the contract without penalty or any liability whatsoever on the part of the County, the State, or the Federal awarding agency.

54. PROCUREMENT ETHICS

Galveston County is committed to the highest ethical standards. Therefore, it is a serious breach of the public trust to subvert the public purchasing process by directing purchases to certain favored vendors, or to tamper with the competitive bidding process, whether it's done for kickbacks, friendship or any other reason. Since misuse of the purchasing power of a local government carries criminal penalties, and many such misuses are from a lack of clear guidelines about what constitutes an abuse of office, the Code of Ethics outlined below must be strictly followed.

Galveston County also requires ethical conduct from those who do business with the County.

GENERAL PROVISIONS – REQUEST FOR PROPOSAL
BOLIVAR BEACH PAVILION
GALVESTON COUNTY, TEXAS

CODE OF ETHICS – Statement of Purchasing Policy:
Public employment is a public trust. It is the policy of Galveston County to promote and balance the objective of protecting the County's integrity and the objective of facilitating the recruitment and retention of personnel needed by Galveston County. Such policy is implemented by prescribing essential standards of ethical conduct without creating unnecessary obstacles to entering public office.

Public employees must discharge their duties impartially so as to assure fair competitive access to governmental procurement by responsible contractors. Moreover, they should conduct themselves in such a manner as to foster public confidence in the integrity of the Galveston County procurement organization.

To achieve the purpose of this Article, it is essential that those doing business with Galveston County also observe the ethical standards prescribed herein.

General Ethical Standards:
It shall be a breach of ethics to attempt to realize personal gain through public employment with Galveston County by any conduct inconsistent with the proper discharge of the employee's duties.

It shall be a breach of ethics to attempt to influence any public employee of Galveston County to breach the standards of ethical conduct set forth in this code.

It shall be a breach of ethics for any employee of Galveston County to participate directly or indirectly in a procurement when the employee knows that:

- The employee or any member of the employee's immediate family, has a financial interest pertaining to the procurement;
- A business or organization in which the employee or any member of the employee's immediate family, has a financial interest pertaining to the procurement; or
- Any other person, business, or organization with which the employee or any member of the employee's immediate family is negotiating or has an arrangement concerning prospective employment is involved in the procurement.

Gratuities:
It shall be a breach of ethics for any person to offer, give, or agree to give any employee or former employee of Galveston County, or for any employee or former employee of Galveston County to solicit, demand, accept or agree to accept from another person, a gratuity or an offer of employment in connection with any decision, approval, disapproval, recommendation, preparation of any part of a program requirement or a purchase request, influencing the content of any specification or procurement standard, rendering of advice, investigation, auditing, or in any other advisory capacity in any proceeding or application, request for ruling, determination, claim or controversy, or other particular matter, pertaining to any program requirement or a contract or subcontract, or to any solicitation or bid pending before this government.

Kickbacks:
It shall be a breach of ethics for any payment, gratuity or offer of employment to be made by or on behalf of a subcontractor under a contract to the prime contractor or higher tier subcontractor for any contract for Galveston County, or to any person associated therewith, as an inducement for the award of a contract, subcontract or order.

Contract Clause:
The prohibition against gratuities and kickbacks prescribed above shall be conspicuously set forth in every contract and solicitation by Galveston County.

GENERAL PROVISIONS – REQUEST FOR PROPOSAL
BOLIVAR BEACH PAVILION
GALVESTON COUNTY, TEXAS

Confidential Information:
It shall be a breach of ethics for any employee or former employee of Galveston County to knowingly use confidential information for actual or anticipated personal gain, or for the actual or anticipated gain of any other person.

Prohibition against Contingent Fees:
It shall be a breach of ethical standards for a person to be retained, or to retain a person, to solicit or secure a Galveston County contract upon an agreement or understanding for a commission, percentage, brokerage, or contingent fee, except for retention of bona fide employees or bona fide established commercial selling agencies for the purpose of securing business. Failure to abide by this section constitutes a breach of ethical standards.

Representation:
Proposer represents and warrants, by signing and submitting its proposal, that it has not retained anyone in violation of this section prohibiting contingent fees.

Contract Clause:
The representation prescribed above shall be conspicuously set forth in every contract and solicitation thereof.

55. NON-COLLUSION AFFIDAVIT

Proposer certifies, by signing and submitting a proposal , that the proposal is not made in the interest of, or on behalf of, any undisclosed person, partnership, company, association, organization, or corporation; that the proposal is genuine and not collusive or sham; that the contractor has not directly or indirectly induced or solicited another contractor to put in a false or sham proposal, and has not directly or indirectly colluded, conspired, connived, or agreed with any contractor or anyone else to put in a sham proposal or that anyone shall refrain from bidding; that the contractor has not in any manner, directly or indirectly, sought by agreement, communications, or conference with anyone to fix the bid price of the contractor of any other proposer, or to fix any overhead, profit or cost element of the proposal price, or that of any other contractor, or to secure any advantage against the public body awarding the contract or anyone interested in the proposed contract; that all statements contained in the proposal are true; and further, that the contractor has not, directly or indirectly, submitted his or her proposal price or any breakdown thereof, or the contents thereof, or divulged information or data relative thereto, or paid, and will not pay, any fee to any cooperation, partnership, company association, organization, bid depository, or to any member or agent thereof to effectuate a collusive or sham proposal.

A blank Non-Collusion Affidavit is included with this proposal packet. Proposer must enclose a truthful and fully executed original Non-Collusion Affidavit with the submission of its proposal. This is a mandatory requirement of this request for proposal. Failure to include the truthfully and fully executed Non-Collusion Affidavit in the submission of its proposal shall be considered non-compliance with the requirements of this request for proposal by the Proposer and grounds for the rejection of Proposer's submission.

No negotiations, decisions, or actions shall be initiated by any company as a result of any verbal discussion with any County employee prior to the opening of responses to this request for proposal.

No officer or employee of the County of Galveston, and no other public or elected official, or employee, who may exercise any function or responsibilities in the review or approval of this undertaking shall have any personal or financial interest, direct or indirect, in any contract or negotiation process thereof. The above compliance request will be part of all County of Galveston contracts for this service.

56. CERTIFICATION REGARDING LOBBYING

Proposer certifies that:

GENERAL PROVISIONS – REQUEST FOR PROPOSAL
BOLIVAR BEACH PAVILION
GALVESTON COUNTY, TEXAS

a. No Federal appropriated funds have been paid or will be paid, by or on behalf of the bidder, to any person for influencing or attempting to influence a department or employee of an agency, a member of Congress, or an employee of a member of Congress in connection with the awarding of any Federal contract, the making of any Federal grant, the making of any Federal loan, the entering into of any cooperative agreement, and the extension, continuation, renewal, amendment, or modification of any Federal contract, grant, loan or cooperative agreement.

b. If any funds other than federal appropriated funds have been paid or will be paid to any person for influencing or attempting to influence a department or employee of any agency, a member of Congress, a department or employee of congress, or an employee of a member of Congress in connection with this federal contract, grant, loan, or cooperative agreement, the bidder shall complete and submit Standard Form LLL, "Disclosure Form to Report Lobbying", in accordance with its instructions.

c. Proposer shall require that the language of this certification be included in the award documents for all subawards at all tiers (including subcontracts, subgrants, and contracts under grants, loans, and cooperative agreements) and that all subrecipients shall certify and disclose accordingly.

The truthful and fully completed and executed original of the Certification Regarding Lobbying (included with bid packet) must be included with the submission of proposer's proposal and is a mandatory requirement of this request for proposal. Proposer's failure to include the fully completed and executed or original of this Certification shall be considered non-compliant with the requirements of this request for proposal and grounds for the rejection of the Proposer's proposal. Submission of the certification is a prerequisite for making or entering into a contract with Proposer and is imposed by Section 1352, Title 31, United States Code. Further, any person who fails to file the required certification shall be subject to a civil penalty of not less than $10,000 and not more than $100,000 for each such failure.

57. NON-DISCRIMINATION

a. **Equal Employment Opportunity:** Proposer will not discriminate against any employee or applicant for employment because of race, color, religion, national origin, sex, disability, genetic information or veteran status. Proposer will take affirmative action to ensure that applicants are employed, and that employees are treated during employment, without regard to their race, color, religion, national origin, sex, disability, genetic information or veteran status. Such action shall include, but not be limited to, the following: employment; upgrading; demotion or transfer; recruitment or recruitment advertising; layoff or termination; rates of pay or other forms of compensation; and selection for training, including apprenticeship. Proposer agrees to post in conspicuous places, available to employees and applicants for employment, notices of employment.

Proposer will, in all solicitation or advertisements for employees placed by or on behalf of proposer, state that all qualified applicants will receive consideration for employment without regard to race, color, religion, national origin, sex, disability, genetic information, or veteran status.

Proposer will cause the foregoing provisions to be inserted in all subcontracts for any work covered by this Agreement so that such provisions will be binding upon each subcontractor, provided that the foregoing provisions shall not apply to contracts or subcontracts for standard commercial supplies or raw materials.

Proposer will include the provisions herein in every subcontract or purchase order unless exempted.

GENERAL PROVISIONS – REQUEST FOR PROPOSAL
BOLIVAR BEACH PAVILION
GALVESTON COUNTY, TEXAS

b. Drug Free Work Place Act: Proposer shall comply with all applicable requirements of the Drug-Free Workplace Act of 1988 (Public Law 100-690, Title V, Subtitle D; 41 U.S.C. § 8102, et seq.) and implementing regulations thereunder.

c. Americans with Disabilities Act: Proposer shall comply with all applicable provisions of the Americans with Disabilities Act of 1990 (Public Law 101-136) and implementing regulations thereunder.

d. OSHA Regulations: Proposer agrees to maintain and to display any applicable materials for its employees in accordance with OSHA regulations.

e. Compliance with Immigration Laws and Use of E-Verify: Proposer agrees to comply with all requirements of the U.S. Immigration Reform and Control Act of 1986, as amended, and any implementing regulations thereto. Proposer further agrees to utilize the E-Verify system through the Department of Homeland Security on its employees. Proposer shall not employ unauthorized aliens, and shall not assign services to be performed to any supplier or subcontractor who are unauthorized aliens. If any personnel performing any services hereunder are discovered to be an unauthorized alien, then Proposer will immediately remove such personnel from performing services hereunder and shall replace such personnel with personnel who are not unauthorized alien(s).

f. State and Federal Law Compliance: Proposer agrees to comply with all other State and Federal laws and regulations applicable to the provision of services under this contract.

58. RECORD RETENTION AND RIGHT TO AUDIT

Proposer shall keep and maintain all records associated with this contract for a minimum of five (5) years from the close of the contract or as required by Federal or State law or regulation, whichever period is longer. If awarded this contract, proposer shall allow the County reasonable access to the records in proposer's possession, custody, or control that the County deems necessary to assist it in auditing the services, costs, and payments provided hereunder. If this contract involves the use of Federal or State funds, then proposer shall also allow reasonable access to representatives of the Office of Inspector General, the General Accounting Office, and the other Federal and/or State agencies overseeing the funds that such entities deem necessary to facilitate review by such agencies and proposer shall maintain fiscal records and supporting documentation for all expenditures in a manner that conforms with OMB Circular A-87 (relocated to 2 C.F.R. Part 225) and this contract.

59. TITLE VI ASSURANCES/TxDOT

The County is subject to Title VI of the Civil Rights Act of 1964 and the Federal and State laws and regulations of the United States Department of Transportation and Texas Department of Transportation (TxDOT). Pursuant to these requirements, the County must have its contractors provide required assurances on compliance with non-discrimination by itself and its subcontractors. The Title VI Assurances within this Subsection are not exhaustive – whenever any Federal, State, or Local requirement requires additional clauses, this list shall not be construed as limiting. Contractor agrees as follows:

(1) **Compliance with Regulations**: The Contractor shall comply with the Regulations relative to nondiscrimination in Federally-assisted programs of the Department of Transportation (hereinafter, DOT)
Title 49, Code of Federal Regulations, Part 21, as they may be amended from time to time (hereinafter referred to as the Regulations), which are incorporated herein by reference and made a part of this contract.

(2) **Non-discrimination**: The Contractor, with regard to the work performed by it during the contract, shall not discriminate on the basis of race, color, national origin, religion, sex, age, disability or Veteran status in the

selection and retention of subcontractors, including procurements of materials and leases of equipment. The Contractor shall not participate either directly or indirectly in the discrimination prohibited by Section 21.5 of the Regulations, including employment practices when the contract covers a program set forth in Appendix B of the Regulations.

(3) **Solicitations for Subcontractors, Including Procurement of Materials and Equipment**: In all solicitations either by competitive bidding or negotiation made by the Contractor for work to be performed under a subcontract, including procurement of materials or leases of equipment, each potential subcontractor or supplier shall be notified by the Contractor of the Contractor's obligations under this contract and the Regulations relative to nondiscrimination on the grounds of race, color, national origin, religion, sex, age, disability or Veteran status.

(4) **Information and Reports**: The Contractor shall provide all information and reports required by the Regulations or directives issued pursuant thereto, and shall permit access to its books, records, accounts, other sources of information and its facilities as may be determined by the Galveston County or the Texas Department of Transportation to be pertinent to ascertain compliance with such Regulations, orders and instructions. Where any information required of the Contractor is in the exclusive possession of another who fails or refuses to furnish this information the Contractor shall so certify to Galveston County or the Texas Department of Transportation as appropriate, and shall set forth what efforts it has made to obtain the information.

(5) **Sanctions for Non-compliance**: In the event of the Contractor's noncompliance with the nondiscrimination provisions of this contract, Galveston County shall impose such contract sanctions as it or the Texas Department of Transportation may determine to be appropriate, including, but not limited to:

(a) withholding of payments to the Contractor under the contract until the Contractor complies, and/or;
(b) cancellation, termination, or suspension of the contract, in whole or in part.

(6) **Incorporation of Provisions**. The Contractor shall include the provisions of paragraphs (1) through (6) in every subcontract, including procurement of materials and leases of equipment, unless exempt by the Regulations, or directives issued pursuant thereto. The Contractor shall take such action with respect to any subcontract or procurement as Galveston County or the Texas Department of Transportation may direct as a means of enforcing such provisions including sanctions for non-compliance: Provided, however, that, in the event Contractor becomes involved in, or is threatened with, litigation with a subcontractor or supplier as a result of such direction, the Contractor may request Galveston County to enter into such litigation to protect the interests of Galveston County, and, in addition, the Contractor may request the United States to enter into such litigation to protect the interests of the United States.

60. SECTION 231.006, FAMILY CODE/DELINQUENT CHILD SUPPORT

Pursuant to Title 5, Section 231.006 of the Texas Family Code, as applicable, Proposer certifies that it, including all of its principals, is/are current in child support payments and that it is eligible to receive payments from State funds under a contract for property, materials, or services. Proposer acknowledges and agrees that if it is awarded this contract, then the ensuing agreement may be terminated and payment withheld if this certification is inaccurate. Finally, by the submission of its proposal, the Proposer certifies that it has included the names and social security numbers of each person with at least 25% ownership interest in Proposer within its response to the request for proposal and that all such persons are current in child support payments.

GENERAL PROVISIONS – REQUEST FOR PROPOSAL
BOLIVAR BEACH PAVILION
GALVESTON COUNTY, TEXAS

61. ANTITRUST

Pursuant to 15 U.S.C. § 1, et seq., and Texas Business and Commerce Code, Chapter 15, Contractor, by the submission of its proposal, certifies that neither Contractor nor any natural person, proprietorship, firm, corporation, partnership, association, or institution represented by Contractor or anyone acting for such natural person, proprietorship, firm, corporation, partnership, association, or institution has violated any Federal or State antitrust laws or communicated the nature of the offer, directly or indirectly, to any competitor or other person engaged in a similar line of business.

62. LABOR STANDARDS

On contracts funded under a federal grant: Proposer acknowledges that the contract to be awarded pursuant to this solicitation is on a grant program funded with Federal funds. Proposer shall comply with the requirements of 29 CFR Part 5 and Part 30 and shall be in conformity with Executive Order 11246, entitled "Equal Employment Opportunity", Copeland, "Anti-Kickback" Act (40 U.S.C. 3145, 29 C.F.R. Part 3), the Davis-Bacon and Related Acts (40 U.S.C. 3141-3148, 29 C.F.R. Parts 1,3, and 5), the Contract Work Hours and Safety Standards Act (40 U.S.C. 3701 et seq.), and all other applicable Federal, State, and local laws and regulations pertaining to labor standards, insofar as those acts apply to the performance of this Agreement. Proposer is also responsible for ensuring that all subcontractors comply with the requirements of 29 CFR Part 5 and Part 30 and shall be in conformity with Executive Order 11246, entitled "Equal Employment Opportunity", Copeland "Anti-Kickback" Act, the Davis-Bacon and Related Acts (29 CFR Parts 1, 3 and 5), the Contract Work Hours and Safety Standards Act (40 U.S.C. 3701 et seq.), and all other applicable Federal, State, and local laws and regulations pertaining to labor standards, insofar as those acts apply to the performance of this Agreement.

63. PROCUREMENT LAWS

a. Proposer shall comply with all applicable local, State, and Federal laws, rules, and regulations.

b. If this contract is made pursuant to a federal award, then Contractor acknowledges that the contract is subject, without limitation, to applicable provisions within 2 C.F.R. Part 200, Uniform Administrative Requirements, Cost Principles, and Audit Requirements for Federal Awards. Contractor shall comply with applicable provisions within 2 C.F.R., Sections 200.319 through 200.326, including but not limited to the following:

1.) **Equal Employment Opportunity**, 41 C.F.R. Part 60-1.4(b) (applicable to federally assisted construction contracts).

(a) During the performance of this contract, the contractor agrees as follows:

(1) The contractor will not discriminate against any employee or applicant for employment because of race, color, religion, sex, national original, disability, or veteran status. The contractor will take affirmative action to ensure that applicants are employed, and that employees are treated during employment, without regard to their race, color, religion, sex, national original, disability or veteran status. Such action shall include, but not be limited to the following: employment, upgrading, demotion, or transfer; recruitment or recruitment advertising; layoff or termination; rates of pay or other forms of compensation; and selection for training, including apprenticeship. The contractor agrees to post in conspicuous places, available to employees and applicants for employment, notices to be provided setting forth the provisions of this nondiscrimination clause.

(2) The contractor will, in all solicitations or advertisements for employees placed by or on behalf of contractor, state that all qualified applicants will receive consideration for employment without regard to race, color, religion, sex, national original, disability, or veteran status.

GENERAL PROVISIONS – REQUEST FOR PROPOSAL
BOLIVAR BEACH PAVILION
GALVESTON COUNTY, TEXAS

(3) The contractor will send to each labor union or representative of workers with which he has a collective bargaining agreement or other contract or understanding, a notice to be provided advising the said labor union or workers' representatives of the contractor's commitments under this section, and shall post copies of the notice in conspicuous places available to employees and applicants for employment.

(4) The contractor will comply with all provisions of Executive Order 11246 of September 24, 1965, and by rules, regulations, and relevant orders of the Secretary of Labor.

(5) The contractor will furnish all information and reports required by Executive Order 11246 of September 24, 1965, and by rules, regulations, and orders of the Secretary of Labor, or pursuant thereto, and will permit access to contractor's books, records, and accounts by the administering agency and the Secretary of Labor for purposes of investigation to ascertain compliance with such rules, regulations, and orders.

(6) In the event of the contractor's noncompliance with the nondiscrimination clauses of this contract or with any of the said rules, regulations, or orders, this contract may be cancelled, terminated, or suspended in whole or in part and the contractor may be declared ineligible for further Government contracts or federally assisted construction contracts in accordance with procedures authorized in Executive Order 11246 of September 24, 1965, and such other sanctions as may be imposed and remedies invoked as provided in Executive Order 11246 of September 24, 1965, or by rule, regulation, or order of the Secretary of Labor, or as otherwise provided by law.

(7) The contractor will include the portion of the sentence immediately preceding paragraph (1) and the provisions of paragraphs (1) through (7) in every subcontract or purchase order unless exempted by rules, regulations, or orders of the Secretary of Labor issued pursuant to section 204 of Executive Order 11246 of September 24, 1965, so that such provisions will be binding upon each subcontractor or vendor. The contractor will take such action with respect to any subcontract or purchase order as the administering agency may direct as a means of enforcing such provisions, including sanctions for noncompliance: Provided, however, that in the event a contractor becomes involved in, or is threatened with, litigation with a subcontractor or vendor as a result of such direction by the administering agency, the contractor may request the United States to enter into such litigation to protect the interests of the United States.

2.) **Small and minority business, women's business enterprises, and labor surplus area firms (2 C.F.R. § 200.321).** The County is required to take affirmative steps to assure that minority businesses, women's business enterprises, and labor surplus area firms are used when possible. This includes requiring the prime contractor, if subcontracts are to be let in the performance of this contract, to itself take affirmative steps in letting the subcontract. Accordingly, if subcontracts are to be let in the performance of this contract, the contractor must take affirmative steps in the letting of the subcontract(s), which must include:

(a) placing qualified small and minority businesses and women's business enterprises on solicitation lists;
(b) assuring that small and minority businesses, and women's business enterprises are solicited whenever they are potential sources;
(c) dividing total requirements, when economically feasible, into smaller tasks or quantities to permit maximum participation by small and minority businesses, and women's business enterprises; and
(d) using the services and assistance, as appropriate, of such organizations as the Small Business Administration and the Minority Business Development Agency of the Department of Commerce.

In accordance with FEMA procurement guidance:

A small business is a business that is independently owned and operated, not dominant in the field of operation in which it is bidding on Galveston County contracts, and qualified as a small business under the Small Business Administration criteria and size standards at 13 C.F.R. Part 121.

GENERAL PROVISIONS – REQUEST FOR PROPOSAL
BOLIVAR BEACH PAVILION
GALVESTON COUNTY, TEXAS

A women's business enterprise is a business enterprise that is: (a) at least 51 percent owned by one or more women or, in the case of a publicly owned business, at least 51 percent of the stock is owned by one or more women; and (b) whose management and daily operations are controlled by one or more women.

A minority business is a business that is (a) at least 51 percent owned by one or more minority group members or, in the case of a publicly owned business, at least 51 percent of the stock is owned by one or more minority group members; and (b) whose management and daily operations are controlled by one or more minority group members.

3.) **Davis-Bacon Act as amended (40 U.S.C. 3141-3148).** When required by Federal program legislation, all prime construction contracts in excess of $2,000 must include a provision for compliance with the Davis-Bacon Act as supplemented by the Department of Labor regulations (29 C.F.R. Part 5, "Labor Standards Provisions Applicable to Contracts Covering Federally Financed and Assisted Construction"). In accordance with the statute, contractor must be required to pay wages to laborers and mechanics at a rate not less than the prevailing wages specified in a wage determination made by the Secretary of Labor. In addition, contractors must be required to pay wages not less than once a week. The non-Federal entity (the County) must place a copy of the current prevailing wage determination issued by the Department of Labor in each solicitation. The decision to award a contract or subcontract must be condition upon the acceptance of the wage determination. The non-Federal entity must report all suspected or reported violations to the Federal awarding agency. The contract must also include a provision for compliance with the Copeland Anti-Kickback Act (40 U.S.C. § 3145) as supplemented by the Department of Labor regulations (29 C.F.R. Part 3, "Contractors and Subcontractors on Public Building or Public Work Financed in Whole or in Part by Loans or Grants from the United States").

4.) **Compliance with the Copeland "Anti-Kickback" Act.** Contractor is prohibited from inducing, by any means, any person employed in the construction, completion, or repair of public work, to give up any part of the compensation to which the person is otherwise entitled. The non-Federal entity must report all suspected or reported violations to the Federal awarding agency. "Whoever, by force, intimidation, or threat of procuring dismissal from employment, or by any other manner whatsoever induces any person employed in the construction, prosecution, completion or repair of any public building, public work, or building or work financed in whole or in part by loans or grants from the United States, to give up any part of the compensation to which he is entitled under his contract of employment, shall be fined under this title [Title 18, U.S.C.] or imprisoned not more than five years, or both." 18 U.S.C. § 874.

(a) Contractor shall comply with 18 U.S.C. § 874, 40 U.S.C. § 3145, and the requirements of 29 C.F.R. Part 3 as may be applicable, which are incorporated by reference into this contract.

(b) The contractor or subcontractor shall insert in any subcontracts the clause above and such other clauses as the Federal awarding agency may be appropriate instructions require, and also a clause requiring the subcontractors to include these clauses in any lower tier subcontracts. The prime contractor shall be responsible for the compliance by any subcontractor or lower tier subcontractor with all of these contract clauses.

(c) Breach. A breach of the contract clause above may be grounds for termination of the contract, and for debarment as a contractor and subcontractor as provided in 29 C.F.R. § 5.12.

5.) **Contract Work Hours and Safety Standards Act.**

(a) Where applicable, all contracts awarded by the County in excess of $100,000 that involve the employment of mechanics or laborers must include a provision for compliance with 40 U.S.C. §§ 3702 and 3704, as supplemented by the Department of Labor regulations at 29 C.F.R. Part 5. Under 40 U.S.C. § 3702 of the Contract Work Hours and Safety Standards Act, each contractor must be required to compute the wages of every mechanic and laborer on the basis of a standard work week of 40 hours. Work in excess of the standard work

week is permissible provided that the worker is compensated at a rate of not less than one and a half times the basic rate of pay for all hours worked in excess of 40 hours in the work week. The requirements of 40 U.S.S. 3704 are applicable to construction work and provide that no laborer or mechanic must be required to work in surroundings or under working conditions which are unsanitary, hazardous or dangerous. These requirements do not apply to the purchase of supplies or material or articles ordinarily available on the open market, or contractors for transportation or transmission of intelligence.

(b) Compliance with the Contract Work Hours and Safety Standards Act.

(1) Overtime requirements. No contractor or subcontractor contracting for any part of the contract work which may require or involve the employment of laborers or mechanics shall require or permit any such laborer or mechanic in any workweek in which he or she is employed on such work to work in excess of forty hours in such workweek unless such laborer or mechanic receives compensation at a rate not less than one and one-half times the basic rate of pay for all hours worked in excess of forty hours in such workweek.

(2) Violation; liability for unpaid wages; liquidated damages. In the event of any violation of the clause set forth in paragraph (1) of this subsection the contractor and any subcontractor responsible therefor shall be liable for the unpaid wages. In addition, such contractor and subcontractor shall be liable to the United States (in the case of work done under contract for the District of Columbia or a territory, to such District or to such territory), for liquidated damages. Such liquidated damages shall be computed with respect to each individual laborer or mechanic, including watchmen and guards, employed in violation of the clause set forth in paragraph (1) of this subsection, in the sum of $10 for each calendar day on which such individual was required or permitted to work in excess of the standard work week of forty hours without payment of the overtime wages required by the clause set forth in paragraph (1) of this subsection.

(3) Withholding for unpaid wages and liquidated damages. The awarding Federal agency, State agency, or the County shall upon its own action or upon written request of an authorized representative of the Department of Labor withhold or cause to be withheld, from any moneys payable on account of work performed by the contractor or subcontractor under any such contract or any other Federal contract with the same prime contractor, or any other federally-assisted contract subject to the Contract Work Hours and Safety Standards Act, which is held by the same prime contractor, such sums as may be determined to be necessary to satisfy any liabilities of such contractor or subcontractor for unpaid wages and liquidated damages as provided in the clause set forth in paragraph (2) of this subsection.

(4) Subcontracts. The contractor or subcontractor shall insert in any subcontracts the clauses set forth in paragraph (1) through (4) of this subsection and also a clause requiring the subcontractors to include these clauses in any lower tier subcontracts. The prime contractor shall be responsible for compliance by any subcontractor or lower tier subcontractor with the clauses set forth in paragraphs (1) through (4) of this subsection.

6.) **Rights to Inventions Made Under a Contractor Agreement.**

(a) If the Federal award meets the definition of "funding agreement" under 37 C.F.R. § 401.2(a) and the recipient or subrecipient wishes to enter into a contract with a small business firm or nonprofit organization regarding the substitution of parties, assignment or performance of experimental, developmental, or research work under the "funding agreement," the recipient or subrecipient must comply with the requirements of 37 C.F.R. Part 401, "Rights to Inventions Made by Nonprofit Organizations and Small Business Firms Under Government Grants, Contracts and Cooperative Agreements," and any implementing regulations issued by the awarding agency.

(b) Stafford Act Disaster Grants. This requirement does not apply to Public Assistance, Hazard Mitigation Grant Program, Crisis Counseling Assistance and Training Grant program, Disaster Case Management Grant Program,

GENERAL PROVISIONS – REQUEST FOR PROPOSAL
BOLIVAR BEACH PAVILION
GALVESTON COUNTY, TEXAS

and Federal Assistance to Individuals and Households – Other Needs Assistance Grant Program, as FEMA awards under these programs do not meet the definition of "funding agreement."

(c) The regulations and 37 C.F.R. § 401.2(a) currently defines "funding agreement" as any contract, grant, or cooperative agreement entered into between any Federal agency, other than the Tennessee Valley Authority, and any contractor for the performance of experimental, developmental, or research work funded in whole or in part by the Federal government. This term also includes any assignment, substitution of parties, or subcontract of any type entered into for the performance of experimental, developmental, or research work under a funding agreement as defined in the first sentence of this paragraph.

7.) **Clean Air Act (42 U.S.C. §§ 7401 – 7671q) and the Federal Water Pollution Control Act 933 U.S.C. §§ 1251-1387), as amended.**

(a) The contractor agrees to comply with all applicable standards, orders or regulations issued pursuant to the Clean Air Act, as amended, 42 U.S.C. § 7401, et seq., and agrees to comply with all applicable standards, orders, or regulations issued pursuant to the Federal Water Pollution Contract Act, as amended, 33 U.S. C. § 1251, et seq.

(b) The contractor agrees to report each violation of the Clean Air Act and/or the Federal Water Pollution Control Act to the Federal awarding agency, the State agency administering the grant, and the Regional Office of the Environmental Protection Agency (EPA) and understands and agrees that the Federal awarding agency, the State agency, and the EPA will, in turn, report each violation as required to assure notification to Galveston County, the Federal Emergency Management Agency, and the appropriate EPA Regional Office.

8.) **Debarment and Suspension (Executive Orders 12549 and12689).** A contract award must not be made to parties listed on the government-wide exclusions in the System for Award Management (SAM), in accordance with the OMB guidelines at 2 C.F.R. Part 180 that implement Executive Orders 12549 and 12689. The Contractor is required to verify that none of the contractor, its principals (defined at 2 C.F.R. § 180.995), or its affiliates (defined at 2 C.F.R. § 180.905) are excluded (defined at 2 C.F.R. §180.940) or disqualified (defined at 2 C.F.R. § 180.935).

Contractor must comply with 2 C.F.R. Part 180, Subpart C and 2 C.F.R. Part 3000, Subpart C, and must include a requirement to comply with these regulations in any lower tier covered transaction it enters into. Proposer agrees to comply with the requirements of 2 C.F.R. Part 180, Subpart C, and 2 C.F.R. Part 3000, Subpart C, while this offer is valid and through the period of any contract that may arise from this offer. The proposer further agrees to include a provision requiring such compliance in its lower tier covered transactions.

9.) **Procurement of Recovered Materials.**

(a.) A non-Federal entity that is a State agency or agency of a political subdivision of the State and its contractors must comply with Section 6002 of the Solid Waste Disposal Act, Public Law No. 89-272 (1965) (codified as amended by the Resource Conservation and Recovery Act at 42 U.S.C. § 6962).

(b.) In the performance of this contract, the contractor shall make maximum use of products containing recovered materials that are EPA-designated items unless the product cannot be acquired—

(1) Competitively within a timeframe providing for compliance with the contract performance schedule;

(2) Meeting contract performance requirements; or

(3) At a reasonable price.

GENERAL PROVISIONS – REQUEST FOR PROPOSAL
BOLIVAR BEACH PAVILION
GALVESTON COUNTY, TEXAS

(c) Information about this requirement is available at EPA's Comprehensive Procurement Guidelines website, http://www.epa.gov/cpg/. The list of EPA-designated items is available at https://www.epa.gov/cpg/products.htm.

In the event of any discrepancy between the provisions in this Section 63 of General Provisions and provisions on the same subject elsewhere within this procurement, the most stringent shall control.

64. ENTIRETY OF AGREEMENT AND MODIFICATION

This contract contains the entire agreement between the parties. Any prior agreement, promise, negotiation or representation not expressly set forth in this contract has no force or effect. Any subsequent modification to this contract must be in writing, signed by both parties.

An official representative, employee, or agent of the County does not have the authority to modify or amend this contract except pursuant to specific authority to do so granted by the Galveston County Commissioners Court.

65. NOTICE

All notices or other communications required or permitted under this contract shall be in writing and shall be deemed to have been duly given if delivered personally in hand, transmitted by facsimile, or mailed certified mail, return receipt requested with proper postage affixed and addressed to the appropriate party at the following address or at such other address as may have been previously given in writing to the parties (proposer shall provide its notice information with its proposal submission). If mailed, the notice shall be deemed delivered when actually received, or if earlier, on the third day following deposit in a United States Postal Service post office or receptacle, duly certified, return receipt requested, with proper postage affixed. If delivered in person, notice shall be deemed delivered when receipted for by, or actually received by, the receiving Party. If transmitted by facsimile, notice shall be deemed delivered when receipt of such transmission is acknowledged.

To the County at:

Hon. Mark Henry,
County Judge of Galveston County
722 Moody (21st Street), Second (2nd) Floor
Galveston, Texas 77550
Fax: (409) 765-2653

With copies to:

Rufus Crowder, CPPO CPPB,
Galveston County Purchasing Agent
722 Moody (21st Street), Fifth (5th) Floor
Galveston, Texas 77550
Fax: (409) 621-7997

Robert Boemer, Director,
Galveston County Legal Department
722 Moody (21st Street), Fifth (5th) Floor
Galveston, Texas 77550
Fax: (409) 770-5560

To the Contractor at:

(Proposer to provide its contact name, address, and facsimile number for notice under the contract.)

GENERAL PROVISIONS – REQUEST FOR PROPOSAL
BOLIVAR BEACH PAVILION
GALVESTON COUNTY, TEXAS

66. USE OF DHS SEAL, LOGO, AND FLAGS PROHIBITED WITHOUT PRIOR APPROVAL
Contractor must obtain permission from the U.S. Department of Homeland Security financial assistance office (DHS FAO) **prior** to using DHS seals(s), logos, crests, or reproductions of flags or likenesses of DHS agency officials, including use of the United States Coast Guard seal, logo, crests or reproductions of flags or likenesses of Coast Guard Officials.

67. FEDERAL GOVERNMENT NOT A PARTY
Contractor acknowledges that the Federal Government is not a party to the contract and is not subject to any obligations or liabilities to Galveston County, contractor, or any other party pertaining to any matter resulting from the contract.

68. PROGRAM FRAUD AND FALSE OR FRAUDULENT STATEMENTS OR RELATED ACTS
In contracts funded through Federal grants, Contractor acknowledges that 31 U.S.C. Chapter 38, Administrative Remedies for False Claims and Statements (31 U.S.C. § 3801, et seq.) and the implementing regulations thereunder, 49 C.F.R. Part 79, apply to Contractors actions pertaining to the contract.

69. LEAD AND ASBESTOS
If this request for proposal involves remediation, demolition, reconstruction, rehabilitation, repair, or construction, or other applicable activities, the Contractor shall be responsible for performing investigations of lead and asbestos containing materials, and any required lead and asbestos abatement in compliance with Federal, State, and local laws, rules, regulations, ordinances and orders, relating to lead abatement and asbestos abatement as applicable, including but not limited to the Texas Asbestos Health Protection Act, codified as Chapter 1954 of the Occupations Code; the Texas Asbestos Health Protection Regulations, located at Title 25, Part 1, Chapter 295, Subchapter C of the Texas Administrative Code; Chapter 1955 of the Texas Occupations Code (lead-based paint abatement); the Texas Environmental Lead Reduction regulations, located at Title 25, Part 1, Chapter 295, Subchapter I of the Texas Administrative Code; the federal National Emission Standards for Asbestos regulations, located at Title 40, Part 61, Subpart M of the Code of Federal Regulations, and the National Emission Standards for Hazardous Air Pollutants. Contractor shall perform such inspections, encapsulation, remediation or other actions as required by federal, State, or local requirements in accordance with the federal Environmental Protection Agency (EPA), Texas Department of State Health Services (TXDSHS), and Texas Commission on Environmental Quality (TCEQ) requirements.

End of General Provision Section

The remainder of this page intentionally left blank

RFP #B181016
OPEN: 03/22/2018
TIME: 2:00 P.M.

PROPOSAL FORM
BOLIVAR BEACH PAVILION
GALVESTON, TEXAS

THE COMPANY OF: _____

Address: _____

_____

FEIN (TAX ID): _____

The following shall be returned with your proposal. Failure to do so may be ample cause for rejection of proposal as non -responsive. It is the responsibility of the Proposer to ensure that Proposer has received all addenda.

Items:	**Confirmed (X):**
1. **References (if required)**	_____
2. **Addenda, if any**	**#1**_____ **#2**____ **#3**____ **#4** ___
3. **One (1) original and five (5) copies of submittal**	_____
4. **Proposal Forms**	_____
5. **Vendor Qualification packet**	_____
6. **Payment Terms:**	_____**net 30** _____**Other**
7. **Non-Collusion Affidavit**	_____
8. **Debarment Form**	_____

Person to contact regarding this proposal: _____

Title: _____ Phone: _____ Fax: _____

E-mail address: _____

Name of person authorized to bind the Firm: _____

Signature: _____ Date: _____

Title: _____ Phone: _____ Fax: _____

E-mail address: _____

PROPOSAL FORM
BOLIVAR BEACH PAVILION
GALVESTON, TEXAS

Proposer shall use this form to provide the information for notice.

1. Contact information for notice:

   Name:_____
   Address:_____
   _____
   Telephone Number:_____ Facsimile number:_____

2. If a copy of notice is requested, please complete below:

   Name:_____
   Address:_____
   _____
   Telephone Number:_____ Facsimile number:_____

3. If second or more copies are requested for notice, please supplement this form and clearly mark the supplement as "Supplementary Notice Information."

   Proposer to submit reference information. Proposer shall use this form to provide minimum required reference information. If Proposer wishes to provide more than the minimum, Proposer should supplement this form and should clearly mark the supplement as "Supplementary Reference Information."

1. References who can attest to the Proposer's capability to carry out the requirements set forth in this qualification:

   Business Name of Organization:_____
   Name of Person:_____
   Title of Individual within Organization, if applicable_____
   Business address:_____
   _____
   Telephone number:_____ Facsimile number:_____

   Business Name of Organization:_____
   Name of Person:_____
   Title of Individual within Organization, if applicable_____
   Business address:_____
   _____
   Telephone number:_____ Facsimile number:_____

   Business Name of Organization:_____
   Name of Person:_____
   Title of Individual within Organization, if applicable_____
   Business address:_____
   _____
   Telephone number:_____ Facsimile number:_____

PROPOSAL FORM
BOLIVAR BEACH PAVILION
GALVESTON, TEXAS

References of major supplier of Proposer who can speak to the financial capability of the Proposer to carry out the requirements set forth in this qualification:

1. Business Name of Supplier_____
   Name of Person:_____
   Title of Individual within business:_____
   Business address:_____
   _____
   Telephone number:_____ Facsimile number:_____

2. Business Name of Supplier_____
   Name of Person:_____
   Title of Individual within business:_____
   Business address:_____
   _____
   Telephone number:_____ Facsimile number:_____

3. Business Name of Supplier_____
   Name of Person:_____
   Title of Individual within business:_____
   Business address:_____
   _____
   Telephone number:_____ Facsimile number:_____

The remainder of this page intentionally left blank

State of Texas §
§
County of Galveston §

NON-COLLUSION AFFIDAVIT

Before me, the undersigned notary, on this day personally appeared _____ (Affiant), whom being first duly sworn, deposes and certifies that:

- Affiant is the _____ of _____, that
  (Individual, Partner, Corporate Officer) (Name of Qualifier)
  submitted the attached Qualification in **RFP #B181016, Bolivar Beach Pavilion**

- Affiant is a duly authorized representative of Qualifier and is authorized to make this Non-Collusion Affidavit;

- The attached Qualification is genuine and is not a collusive or sham Qualification;

- The attached Qualification has been independently arrived at without collusion with any other qualifier, bidder, proposer, person, firm, competitor, or potential competitor;

- Qualifier has not colluded, conspired, connived or agreed, directly or indirectly, with any other qualifier, bidder, proposer, person, firm, competitor, or potential competitor, to submit a collusive or sham qualification or that such other qualifier, bidder, proposer, person, firm, competitor, or potential competitor shall refrain from qualifying;

- Qualifier has not in any manner, directly or indirectly, sought by agreement or collusion or communication or conference with any other qualifier, bidder, proposer, person, firm, competitor, or potential competitor to fix the price or prices in the attached Qualification or of the qualification any other qualifier;

- Qualifier has not in any manner, directly or indirectly, sought by agreement or collusion or communication or conference with any other qualifier bidder, proposer, person, firm, competitor, or potential competitor to fix the overhead, profit or cost element of the Qualification price or prices of any other qualifier, or to secure through any collusion, conspiracy, connivance, or unlawful agreement any advantage against Galveston County or any person interested in the proposed contract;

- Affiant has not in any manner, directly or indirectly, sought by agreement or collusion or communication or conference with any other qualifier, bidder, proposer, person, firm, competitor, or potential competitor, paid or agreed to pay any other qualifier, bidder, proposer, person, firm, competitor, or potential competitor any money or anything of value in return for assistance in procuring or attempting to procure a contract or in return for establishing the price or prices in the attached Qualification or the qualification of any other Qualifier; and

- Affiant certifies that Affiant is fully informed regarding the accuracy of the statements contained herein, and under penalties of perjury, certifies and affirms the truth of the statements herein, such penalties being applicable to the Qualifier as well as to Affiant signing on its behalf.

_____
Signature of Affiant

SWORN TO and **SUBSCRIBED** before me this _____day of_____, 2018.

_____
Notary Public

My Commission Expires: _____

County of Galveston
Purchasing Department
Vendor Qualification Packet

(rev. 1.4, September 28, 2017)

All interested parties seeking consideration for qualified vendor status with the County of Galveston **should complete and return only the following forms to:**

Galveston County Purchasing Department
722 Moody Avenue, (21st Street), 5th Floor
Galveston, Texas 77550
(409) 770-5371 ***office***
(409) 621-7987 ***fax***

PEID Form: **Person /Entity Information Data**

W -9 Form: Request for Taxpayer Identification Number and Certification
(please note that the included form may not be the latest revised form issued by the Internal Revenue Service. *Please check the IRS website at http://www.irs.govlpublirs-rdflfw9.pdf for the latest revision of this form.)*

CIQ Form: **Conflict of Interest Questionnaire**
(please note that the included form may not be the latest revised form issued by the State of Texas Ethics Commission. *Please check the Texas Ethics Commission website at http://www.ethics.state.tx.us/whatsnew/conflict_forms.htm for the latest revision of this form. Please note that Galveston County Purchasing Agent is not responsible for the filing of this form with the Galveston County Clerk per instructions of the State of Texas Ethics Commission).*

Debarment: **CERTIFICATION REGARDING DEBARMENT, SUSPENSION, PROPOSED DEBARMENT, AND OTHER RESPONSIBILITY MATTERS & REQUIREMENT TO REGISTER IN SAM**
Vendors/contractor certifies that neither it, nor any of its Principals, are presently debarred, suspended, proposed for debarment, disqualified, excluded, or in any way declared ineligible for the award of contracts by any Federal agency. Vendor agrees that it shall refund Galveston County for any payments made to Contractor while ineligible. Vendor acknowledges that Contractor's uncured failure to perform under any agreement with the County of Galveston, if such should occur, may result in Contractor being debarred from performing additional work for the County, the respecting State Agency administering the grant funding the contract, if applicable, the State, FEMA or HUD (as applicable), and other Federal and State entities. Further, Vendor has executed the Certification Regarding Debarment, Suspension, Proposed Debarment, and Other Responsibility Matters and returned the fully completed and executed original certification with the submission of this Vendor Qualification Packet. ***The truthful and fully completed and executed original of the Certification Regarding Debarment, Suspension, Proposed Debarment, and Other Responsibility Matters must be included with the submission of this Vendor Qualification Packet and is a mandatory requirement to become a vendor of Galveston County. Vendor's failure to include the fully completed and executed original of this Certification shall be considered non-compliant with the requirements of this vendor qualification request and grounds for the rejection of vendor's request.*** *Vendor shall immediately notify the County Purchasing Agent if it becomes debarred or suspended, placed on*

the Consolidated List of Debarred Contractors, or in any other way becomes ineligible for award of contract by any Federal agency. This Certification is a material fact relied upon by Galveston County; if it is later determined that the vendor did not comply with 2 C.F.R. Part 180 and 2 C.F.R. Part 3000, in additional to the remedies available to Galveston County and the State agency administering a grant, the Federal Government may pursue available remedies, including but not limited to suspension and/or debarment of contractor. If the contract to be awarded pursuant to a Galveston County procurement effort involves the use of Federal funds, then vendor must also be registered in the Federal Contractor Registry through the System for Award Management (SAM) to be eligible for award of contract pursuant to the procurement.

Information regarding the SAM is available at:
http://www.federalcontractorregistry.com/?gclid=CIG1hf2rr8wCFYkCaQoducANZw or at https://www.sam.gov/portal/SAM/#1.

No contract involving the use of Federal funds may be awarded to any vendor unless and until such registration is current and in good standing under SAM. Successful vendors must maintain SAM registration throughout the entire term of any contractual agreement with the County. If a contract involves the use of Federal funds, then vendor must enclose proof of such SAM registration within its response, which is also a mandatory requirement of County procurement policy; failure to enclose such proof shall be considered non-compliant with the requirements of any procurement effort and grounds for the rejection of vendor's response to any procurement efforts (i.e., bid, proposal, or qualifications statement, as applicable).

Direct Deposit: **Direct Deposit Authorization Form**

Banking made easier through an ACH Vendor Payment service (direct deposit) available from Galveston County. With an ACH Vendor Payment, payments are deposited directly into a checking or savings account at a designated bank, savings and loan, credit union, or any other member of an automated clearing house.

Certificate(s) of Insurance: **If the person or entity seeking qualified vendor status with the County will be performing work at or on any County owned facility and/or property, Certificate(s) of Insurance are required to be submitted prior to performing any work.**

Insurance requirements are as follows:

Public Liability and Property Damage Insurance:

Successful vendor agrees to keep in full force and effect, a policy of public liability and property damage insurance issued by a casualty company authorized to do business in the State of Texas, and in standard form approved by the Board of Insurance Commissioners of the State of Texas, with coverage provisions insuring the public from any loss or damage that may arise to any person or property by reason of services rendered by vendor. Vendor shall at its own expense be required to carry the following minimum insurance coverages:

1. For damages arising out of bodily injury to or death of one person in anyone occurrence - one hundred thousand and no/100 dollars ($100,000.00);
2. For damages arising out of bodily injury to or death of two or more persons in anyone occurrence - three hundred thousand and no/100 dollars ($300,000.00); and
3. For injury to or destruction of property in anyone occurrence - one hundred thousand and no/100 dollars ($100,000.00).

This insurance shall be either on an occurrence basis or on a claims made basis. Provided however, that if the coverage is on a claims made basis, then the vendor shall be required to purchase, at the termination of this agreement, tail coverage for the County for the period of the County's relationship with the vendor under this agreement. Such coverage shall be in the amounts set forth in subparagraphs (1), (2), and (3) above.

Worker's Compensation Insurance:

Successful vendor shall also carry in full force Workers' Compensation Insurance policy(ies), if there is more than one employee, for all employees, including but not limited to full time, part time, and emergency employees employed by the vendor. Current insurance certificates certifying that such policies as specified above are in full force and effect shall be furnished by the vendor to the County.

The County of Galveston shall be named as additional insured on policies listed in subparagraphs above and shall be notified of any changes to the policy(ies) during the contractual period. Insurance is to be placed with insurers having a Best rating of no less than A. The vendor shall furnish the County with certificates of insurance and original endorsements affecting coverage required by these insurance clauses. The certificates and endorsements for each insurance policy are to be signed by a person authorized by the insurer to bind coverage on its behalf. The vendor shall be required to submit annual renewals for the term of any contractual agreement, purchase order or term contract, with Galveston County prior to expiration of any policy.

In addition to the remedies stated herein, the County has the right to pursue other remedies permitted by law or in equity.

The County agrees to provide vendor with reasonable and timely notice of any claim, demand, or cause of action made or brought against the County arising out of or related to utilization of the property. Vendor shall have the right to defend any such claim, demand, or cause of action at its sole cost and expense and within its sole and exclusive discretion. The County agrees not to compromise or settle any claim or cause of action arising out of or related to the utilization of the property without the prior written consent of the vendor.

In no event shall the County be liable for any damage to or destruction of any property belonging to the vendor unless specified in writing and agreed upon by both parties.

Procurement Policy - Special Note:

Understand that it is, according to Texas Local Government Code, Section 262.011, Purchasing Agents, subsections (d), (e), and (f), the sole responsibility of the Purchasing Agent to supervise all procurement transactions.

Therefore, be advised that all procurement transactions require proper authorization in the form of a Galveston County purchase order from the Purchasing Agent's office prior to commitment to deliver supplies, materials, equipment, including contracts for repair, service, and maintenance agreements. Any commitments made without proper authorization from the Purchasing Agent's office, pending Commissioners' Court approval, may become the sole responsibility of the individual making the commitment including the obligation of payment.

Code of Ethics - Statement of Purchasing Policy:

Public employment is a public trust. It is the policy of Galveston County to promote and balance the objective of protecting the County's integrity and the objective of facilitating the recruitment and retention of personnel needed by Galveston County. Such policy is implemented by prescribing essential standards of ethical conduct without creating unnecessary obstacles to entering public office.

Public employees must discharge their duties impartially so as to assure fair competitive access to governmental procurement by responsible contractors. Moreover, they should conduct themselves in such a manner as to foster public confidence in the integrity of the Galveston County procurement organization.

To achieve the purpose of these instructions, it is essential that those doing business with Galveston County also observe the ethical standards prescribed here.

General Ethical Standards: It shall be a breach of ethics to attempt to realize personal gain through public employment with Galveston County by any conduct inconsistent with the proper discharge of the employee's duties.

It shall be a breach of ethics to attempt to influence any public employee of Galveston County to breach the standards of ethical conduct set forth in this code.

It shall be a breach of ethics for any employee of Galveston County to participate directly or indirectly in procurement when the employee knows that:

- The employee or any member of the employee's immediate family has a financial interest pertaining to the procurement.
- A business or organization in which the employee, or any member of the employee's immediate family, has a financial interest pertaining to the procurement.
- Any other person, business or organization with which the employee or any member of the employee's immediate family is negotiating or has an arrangement concerning prospective employment is involved in the procurement.

Gratuities: It shall be a breach of ethics to offer, give or agree to give any employee of Galveston County, or for any employee or former employee of Galveston County to solicit, demand, accept or agree to accept from another person, a gratuity or an offer of employment in connection with any decision, approval, disapproval, recommendation, preparation of any part of a program requirement or purchase request, influencing the content of any specification or procurement standard, rendering of advice, investigation, auditing, or in any other advisory capacity in any program requirement or a contract or subcontract, or to any solicitation or proposal therefore pending before this government.

Kickbacks: It shall be a breach of ethics for any payment, gratuity or offer of employment to be made by or on behalf of a subcontractor under a contract to the prime contractor or higher tier subcontractor for any contract for Galveston County, or any person associated therewith, as an inducement for the award of a subcontract or order.

Contract Clause: The prohibition against gratuities and kickbacks prescribed above shall be conspicuously set forth in every contract and solicitation by Galveston County.

Confidential Information: It shall be a breach of ethics for any employee or former employee of Galveston County to knowingly use confidential information for actual or anticipated personal gain, or for the actual or anticipated gain of any person.

Questions/Concerns:
If you have any questions or concerns regarding the information or instructions contained within this packet, please contact any member of the Purchasing Department staff at **(409) 770-5371**.

CONFLICT OF INTEREST DISCLOSURE REPORTING

Proposer may be required under Chapter 176 of the Texas Local Government Code to complete and file a conflict of interest questionnaire (CIQ Form). If so, the completed CIQ Form must be filed with the County Clerk of Galveston County, Texas.

If Proposer has an employment or other business relationship with an officer of Galveston County or with a family member of an officer of Galveston County that results in the officer or family member of the officer receiving taxable income that exceeds $2,500.00 during the preceding 12-month period, then Proposer **MUST** complete a CIQ Form and file the original of the CIQ Form with the County Clerk of Galveston County.

If Proposer has given an officer of Galveston County or a family member of an officer of Galveston County one or more gifts with an aggregate value of more than $250.00 during the preceding 12-months, then Proposer **MUST** complete a CIQ Form and file the original of the CIQ Form with the County Clerk of Galveston County.

The Galveston County Clerk has offices at the following locations:

Galveston County Clerk
Galveston County Justice Center, Suite 2001
600 59th Street
Galveston, Texas 77551

Galveston County Clerk
North County Annex, 1st Floor
174 Calder Road
League City, Texas 77573

Again, if Proposer is required to file a CIQ Form, the original completed form is filed with the Galveston County Clerk (not the Purchasing Agent).

For Proposer's convenience, a blank CIQ Form is enclosed with this proposal. Blank CIQ Forms may also be obtained by visiting the Galveston County Clerk's website and/or the Purchasing Agent's website - both of these web sites are linked to the Galveston County homepage, at http://www.co.galveston.tx.us.

As well, blank CIQ Forms may be obtained by visiting the Texas Ethics Commission website, specifically at http://www.ethics.state.tx.us/whatsnew/conflictforms.htm.

Chapter 176 specifies deadlines for the filing of CIQ Forms (both initial filings and updated filings).

It is Proposer's sole responsibility to file a true and complete CIQ Form with the Galveston County Clerk if Proposer is required to file by the requirements of Chapter 176. Proposer is advised that it is an offense to fail to comply with the disclosure reporting requirements dictated under Chapter 176 of the Texas Local Government Code.

If you have questions about compliance with Chapter 176, please consult your own legal counsel. Compliance is the individual responsibility of each person, business, and agent who is subject to Chapter 176 of the Texas Local Government Code.

COUNTY of GALVESTON

Purchasing Department

rev. 1.3, March 29, 2010

FORM PEID:	**Request for Person-Entity Identification Data**

Instructions: Please type or print clearly when completing sections 1 thru 4 and return completed form to:

Galveston County Purchasing Agent
722 Moody Avenue (21 st. Street), 5th Floor
Galveston, Texas 77550
(409) 770-5371
prodoc@co.galveston.tx.us

1.

Business Name:	
Attention Line:	

2.

Physical Address:			
City:		**State:**	**Zip+4:**

3.

Billing / Remit Address:			
City:		**State:**	**Zip+4**

4.

Main Contact Person:	
Main Phone Number:	
Fax Number:	
E-mail Address:	

Areas below are for County use only.

Requested By:	**Phone / Ext. #**
Department:	**Date:**

Action Requested - Check One:	**IFAS PEID Vendor Number:**	
( ) Add New	( ) Change Data	( ) Re-activate
( ) Inactivate	( ) Employee	( ) Attorney
( ) Landlord	( ) Foster Parent	( ) Refund
( ) OneTime	( ) Foster Child	

Form **W-9**
(Rev. December 2014)
Department of the Treasury
Internal Revenue Service

Request for Taxpayer Identification Number and Certification

Give Form to the requester. Do not send to the IRS.

Print or type
See Specific Instructions on page 2.

1 Name (as shown on your income tax return). Name is required on this line; do not leave this line blank.

2 Business name/disregarded entity name, if different from above

3 Check appropriate box for federal tax classification; check only **one** of the following seven boxes:
☐ Individual/sole proprietor or single-member LLC ☐ C Corporation ☐ S Corporation ☐ Partnership ☐ Trust/estate
☐ Limited liability company. Enter the tax classification (C=C corporation, S=S corporation, P=partnership) ▶
Note. For a single-member LLC that is disregarded, do not check LLC; check the appropriate box in the line above for the tax classification of the single-member owner.
☐ Other (see instructions) ▶

4 Exemptions (codes apply only to certain entities, not individuals; see instructions on page 3):
Exempt payee code (if any)
Exemption from FATCA reporting code (if any)
(Applies to accounts maintained outside the U.S.)

5 Address (number, street, and apt. or suite no.)

Requester's name and address (optional)

6 City, state, and ZIP code

7 List account number(s) here (optional)

Part I Taxpayer Identification Number (TIN)

Enter your TIN in the appropriate box. The TIN provided must match the name given on line 1 to avoid backup withholding. For individuals, this is generally your social security number (SSN). However, for a resident alien, sole proprietor, or disregarded entity, see the Part I instructions on page 3. For other entities, it is your employer identification number (EIN). If you do not have a number, see *How to get a TIN* on page 3.

Note. If the account is in more than one name, see the instructions for line 1 and the chart on page 4 for guidelines on whose number to enter.

Social security number
☐☐☐ - ☐☐ - ☐☐☐☐

or

Employer identification number
☐☐ - ☐☐☐☐☐☐☐

Part II Certification

Under penalties of perjury, I certify that:

1. The number shown on this form is my correct taxpayer identification number (or I am waiting for a number to be issued to me); and
2. I am not subject to backup withholding because: (a) I am exempt from backup withholding, or (b) I have not been notified by the Internal Revenue Service (IRS) that I am subject to backup withholding as a result of a failure to report all interest or dividends, or (c) the IRS has notified me that I am no longer subject to backup withholding; and
3. I am a U.S. citizen or other U.S. person (defined below); and
4. The FATCA code(s) entered on this form (if any) indicating that I am exempt from FATCA reporting is correct.

Certification instructions. You must cross out item 2 above if you have been notified by the IRS that you are currently subject to backup withholding because you have failed to report all interest and dividends on your tax return. For real estate transactions, item 2 does not apply. For mortgage interest paid, acquisition or abandonment of secured property, cancellation of debt, contributions to an individual retirement arrangement (IRA), and generally, payments other than interest and dividends, you are not required to sign the certification, but you must provide your correct TIN. See the instructions on page 3.

Sign Here **Signature of U.S. person ▶** **Date ▶**

General Instructions

Section references are to the Internal Revenue Code unless otherwise noted.

Future developments. Information about developments affecting Form W-9 (such as legislation enacted after we release it) is at *www.irs.gov/fw9*.

Purpose of Form

An individual or entity (Form W-9 requester) who is required to file an information return with the IRS must obtain your correct taxpayer identification number (TIN) which may be your social security number (SSN), individual taxpayer identification number (ITIN), adoption taxpayer identification number (ATIN), or employer identification number (EIN), to report on an information return the amount paid to you, or other amount reportable on an information return. Examples of information returns include, but are not limited to, the following:

- Form 1099-INT (interest earned or paid)
- Form 1099-DIV (dividends, including those from stocks or mutual funds)
- Form 1099-MISC (various types of income, prizes, awards, or gross proceeds)
- Form 1099-B (stock or mutual fund sales and certain other transactions by brokers)
- Form 1099-S (proceeds from real estate transactions)
- Form 1099-K (merchant card and third party network transactions)
- Form 1098 (home mortgage interest), 1098-E (student loan interest), 1098-T (tuition)
- Form 1099-C (canceled debt)
- Form 1099-A (acquisition or abandonment of secured property)

Use Form W-9 only if you are a U.S. person (including a resident alien), to provide your correct TIN.

If you do not return Form W-9 to the requester with a TIN, you might be subject to backup withholding. See *What is backup withholding?* on page 2.

By signing the filled-out form, you:

1. Certify that the TIN you are giving is correct (or you are waiting for a number to be issued),

2. Certify that you are not subject to backup withholding, or

3. Claim exemption from backup withholding if you are a U.S. exempt payee. If applicable, you are also certifying that as a U.S. person, your allocable share of any partnership income from a U.S. trade or business is not subject to the withholding tax on foreign partners' share of effectively connected income, and

4. Certify that FATCA code(s) entered on this form (if any) indicating that you are exempt from the FATCA reporting, is correct. See *What is FATCA reporting?* on page 2 for further information.

Note. If you are a U.S. person and a requester gives you a form other than Form W-9 to request your TIN, you must use the requester's form if it is substantially similar to this Form W-9.

Definition of a U.S. person. For federal tax purposes, you are considered a U.S. person if you are:

- An individual who is a U.S. citizen or U.S. resident alien;
- A partnership, corporation, company, or association created or organized in the United States or under the laws of the United States;
- An estate (other than a foreign estate); or
- A domestic trust (as defined in Regulations section 301.7701-7).

Special rules for partnerships. Partnerships that conduct a trade or business in the United States are generally required to pay a withholding tax under section 1446 on any foreign partners' share of effectively connected taxable income from such business. Further, in certain cases where a Form W-9 has not been received, the rules under section 1446 require a partnership to presume that a partner is a foreign person, and pay the section 1446 withholding tax. Therefore, if you are a U.S. person that is a partner in a partnership conducting a trade or business in the United States, provide Form W-9 to the partnership to establish your U.S. status and avoid section 1446 withholding on your share of partnership income.

In the cases below, the following person must give Form W-9 to the partnership for purposes of establishing its U.S. status and avoiding withholding on its allocable share of net income from the partnership conducting a trade or business in the United States:

- In the case of a disregarded entity with a U.S. owner, the U.S. owner of the disregarded entity and not the entity;
- In the case of a grantor trust with a U.S. grantor or other U.S. owner, generally, the U.S. grantor or other U.S. owner of the grantor trust and not the trust; and
- In the case of a U.S. trust (other than a grantor trust), the U.S. trust (other than a grantor trust) and not the beneficiaries of the trust.

Foreign person. If you are a foreign person or the U.S. branch of a foreign bank that has elected to be treated as a U.S. person, do not use Form W-9. Instead, use the appropriate Form W-8 or Form 8233 (see Publication 515, Withholding of Tax on Nonresident Aliens and Foreign Entities).

Nonresident alien who becomes a resident alien. Generally, only a nonresident alien individual may use the terms of a tax treaty to reduce or eliminate U.S. tax on certain types of income. However, most tax treaties contain a provision known as a "saving clause." Exceptions specified in the saving clause may permit an exemption from tax to continue for certain types of income even after the payee has otherwise become a U.S. resident alien for tax purposes.

If you are a U.S. resident alien who is relying on an exception contained in the saving clause of a tax treaty to claim an exemption from U.S. tax on certain types of income, you must attach a statement to Form W-9 that specifies the following five items:

1. The treaty country. Generally, this must be the same treaty under which you claimed exemption from tax as a nonresident alien.
2. The treaty article addressing the income.
3. The article number (or location) in the tax treaty that contains the saving clause and its exceptions.
4. The type and amount of income that qualifies for the exemption from tax.
5. Sufficient facts to justify the exemption from tax under the terms of the treaty article.

Example. Article 20 of the U.S.-China income tax treaty allows an exemption from tax for scholarship income received by a Chinese student temporarily present in the United States. Under U.S. law, this student will become a resident alien for tax purposes if his or her stay in the United States exceeds 5 calendar years. However, paragraph 2 of the first Protocol to the U.S.-China treaty (dated April 30, 1984) allows the provisions of Article 20 to continue to apply even after the Chinese student becomes a resident alien of the United States. A Chinese student who qualifies for this exception (under paragraph 2 of the first protocol) and is relying on this exception to claim an exemption from tax on his or her scholarship or fellowship income would attach to Form W-9 a statement that includes the information described above to support that exemption.

If you are a nonresident alien or a foreign entity, give the requester the appropriate completed Form W-8 or Form 8233.

Backup Withholding

What is backup withholding? Persons making certain payments to you must under certain conditions withhold and pay to the IRS 28% of such payments. This is called "backup withholding." Payments that may be subject to backup withholding include interest, tax-exempt interest, dividends, broker and barter exchange transactions, rents, royalties, nonemployee pay, payments made in settlement of payment card and third party network transactions, and certain payments from fishing boat operators. Real estate transactions are not subject to backup withholding.

You will not be subject to backup withholding on payments you receive if you give the requester your correct TIN, make the proper certifications, and report all your taxable interest and dividends on your tax return.

Payments you receive will be subject to backup withholding if:

1. You do not furnish your TIN to the requester,
2. You do not certify your TIN when required (see the Part II instructions on page 3 for details),
3. The IRS tells the requester that you furnished an incorrect TIN,
4. The IRS tells you that you are subject to backup withholding because you did not report all your interest and dividends on your tax return (for reportable interest and dividends only), or
5. You do not certify to the requester that you are not subject to backup withholding under 4 above (for reportable interest and dividend accounts opened after 1983 only).

Certain payees and payments are exempt from backup withholding. See *Exempt payee code* on page 3 and the separate Instructions for the Requester of Form W-9 for more information.

Also see *Special rules for partnerships* above.

What is FATCA reporting?

The Foreign Account Tax Compliance Act (FATCA) requires a participating foreign financial institution to report all United States account holders that are specified United States persons. Certain payees are exempt from FATCA reporting. See *Exemption from FATCA reporting code* on page 3 and the Instructions for the Requester of Form W-9 for more information.

Updating Your Information

You must provide updated information to any person to whom you claimed to be an exempt payee if you are no longer an exempt payee and anticipate receiving reportable payments in the future from this person. For example, you may need to provide updated information if you are a C corporation that elects to be an S corporation, or if you no longer are tax exempt. In addition, you must furnish a new Form W-9 if the name or TIN changes for the account; for example, if the grantor of a grantor trust dies.

Penalties

Failure to furnish TIN. If you fail to furnish your correct TIN to a requester, you are subject to a penalty of $50 for each such failure unless your failure is due to reasonable cause and not to willful neglect.

Civil penalty for false information with respect to withholding. If you make a false statement with no reasonable basis that results in no backup withholding, you are subject to a $500 penalty.

Criminal penalty for falsifying information. Willfully falsifying certifications or affirmations may subject you to criminal penalties including fines and/or imprisonment.

Misuse of TINs. If the requester discloses or uses TINs in violation of federal law, the requester may be subject to civil and criminal penalties.

Specific Instructions

Line 1

You must enter one of the following on this line; **do not** leave this line blank. The name should match the name on your tax return.

If this Form W-9 is for a joint account, list first, and then circle, the name of the person or entity whose number you entered in Part I of Form W-9.

a. **Individual.** Generally, enter the name shown on your tax return. If you have changed your last name without informing the Social Security Administration (SSA) of the name change, enter your first name, the last name as shown on your social security card, and your new last name.

Note. ITIN applicant: Enter your individual name as it was entered on your Form W-7 application, line 1a. This should also be the same as the name you entered on the Form 1040/1040A/1040EZ you filed with your application.

b. **Sole proprietor or single-member LLC.** Enter your individual name as shown on your 1040/1040A/1040EZ on line 1. You may enter your business, trade, or "doing business as" (DBA) name on line 2.

c. **Partnership, LLC that is not a single-member LLC, C Corporation, or S Corporation.** Enter the entity's name as shown on the entity's tax return on line 1 and any business, trade, or DBA name on line 2.

d. **Other entities.** Enter your name as shown on required U.S. federal tax documents on line 1. This name should match the name shown on the charter or other legal document creating the entity. You may enter any business, trade, or DBA name on line 2.

e. **Disregarded entity.** For U.S. federal tax purposes, an entity that is disregarded as an entity separate from its owner is treated as a "disregarded entity." See Regulations section 301.7701-2(c)(2)(iii). Enter the owner's name on line 1. The name of the entity entered on line 1 should never be a disregarded entity. The name on line 1 should be the name shown on the income tax return on which the income should be reported. For example, if a foreign LLC that is treated as a disregarded entity for U.S. federal tax purposes has a single owner that is a U.S. person, the U.S. owner's name is required to be provided on line 1. If the direct owner of the entity is also a disregarded entity, enter the first owner that is not disregarded for federal tax purposes. Enter the disregarded entity's name on line 2, "Business name/disregarded entity name." If the owner of the disregarded entity is a foreign person, the owner must complete an appropriate Form W-8 instead of a Form W-9. This is the case even if the foreign person has a U.S. TIN.

Line 2

If you have a business name, trade name, DBA name, or disregarded entity name, you may enter it on line 2.

Line 3

Check the appropriate box in line 3 for the U.S. federal tax classification of the person whose name is entered on line 1. Check only one box in line 3.

Limited Liability Company (LLC). If the name on line 1 is an LLC treated as a partnership for U.S. federal tax purposes, check the "Limited Liability Company" box and enter "P" in the space provided. If the LLC has filed Form 8832 or 2553 to be taxed as a corporation, check the "Limited Liability Company" box and in the space provided enter "C" for C corporation or "S" for S corporation. If it is a single-member LLC that is a disregarded entity, do not check the "Limited Liability Company" box; instead check the first box in line 3 "Individual/sole proprietor or single-member LLC."

Line 4, Exemptions

If you are exempt from backup withholding and/or FATCA reporting, enter in the appropriate space in line 4 any code(s) that may apply to you.

Exempt payee code.

- Generally, individuals (including sole proprietors) are not exempt from backup withholding.
- Except as provided below, corporations are exempt from backup withholding for certain payments, including interest and dividends.
- Corporations are not exempt from backup withholding for payments made in settlement of payment card or third party network transactions.
- Corporations are not exempt from backup withholding with respect to attorneys' fees or gross proceeds paid to attorneys, and corporations that provide medical or health care services are not exempt with respect to payments reportable on Form 1099-MISC.

The following codes identify payees that are exempt from backup withholding. Enter the appropriate code in the space in line 4.

1—An organization exempt from tax under section 501(a), any IRA, or a custodial account under section 403(b)(7) if the account satisfies the requirements of section 401(f)(2)

2—The United States or any of its agencies or instrumentalities

3—A state, the District of Columbia, a U.S. commonwealth or possession, or any of their political subdivisions or instrumentalities

4—A foreign government or any of its political subdivisions, agencies, or instrumentalities

5—A corporation

6—A dealer in securities or commodities required to register in the United States, the District of Columbia, or a U.S. commonwealth or possession

7—A futures commission merchant registered with the Commodity Futures Trading Commission

8—A real estate investment trust

9—An entity registered at all times during the tax year under the Investment Company Act of 1940

10—A common trust fund operated by a bank under section 584(a)

11—A financial institution

12—A middleman known in the investment community as a nominee or custodian

13—A trust exempt from tax under section 664 or described in section 4947

The following chart shows types of payments that may be exempt from backup withholding. The chart applies to the exempt payees listed above, 1 through 13.

IF the payment is for . . .	THEN the payment is exempt for . . .
Interest and dividend payments	All exempt payees except for 7
Broker transactions	Exempt payees 1 through 4 and 6 through 11 and all C corporations. S corporations must not enter an exempt payee code because they are exempt only for sales of noncovered securities acquired prior to 2012.
Barter exchange transactions and patronage dividends	Exempt payees 1 through 4
Payments over $600 required to be reported and direct sales over $5,000[1]	Generally, exempt payees 1 through 5[2]
Payments made in settlement of payment card or third party network transactions	Exempt payees 1 through 4

[1] See Form 1099-MISC, Miscellaneous Income, and its instructions.

[2] However, the following payments made to a corporation and reportable on Form 1099-MISC are not exempt from backup withholding: medical and health care payments, attorneys' fees, gross proceeds paid to an attorney reportable under section 6045(f), and payments for services paid by a federal executive agency.

Exemption from FATCA reporting code. The following codes identify payees that are exempt from reporting under FATCA. These codes apply to persons submitting this form for accounts maintained outside of the United States by certain foreign financial institutions. Therefore, if you are only submitting this form for an account you hold in the United States, you may leave this field blank. Consult with the person requesting this form if you are uncertain if the financial institution is subject to these requirements. A requester may indicate that a code is not required by providing you with a Form W-9 with "Not Applicable" (or any similar indication) written or printed on the line for a FATCA exemption code.

A—An organization exempt from tax under section 501(a) or any individual retirement plan as defined in section 7701(a)(37)

B—The United States or any of its agencies or instrumentalities

C—A state, the District of Columbia, a U.S. commonwealth or possession, or any of their political subdivisions or instrumentalities

D—A corporation the stock of which is regularly traded on one or more established securities markets, as described in Regulations section 1.1472-1(c)(1)(i)

E—A corporation that is a member of the same expanded affiliated group as a corporation described in Regulations section 1.1472-1(c)(1)(i)

F—A dealer in securities, commodities, or derivative financial instruments (including notional principal contracts, futures, forwards, and options) that is registered as such under the laws of the United States or any state

G—A real estate investment trust

H—A regulated investment company as defined in section 851 or an entity registered at all times during the tax year under the Investment Company Act of 1940

I—A common trust fund as defined in section 584(a)

J—A bank as defined in section 581

K—A broker

L—A trust exempt from tax under section 664 or described in section 4947(a)(1)

M—A tax exempt trust under a section 403(b) plan or section 457(g) plan

Note. You may wish to consult with the financial institution requesting this form to determine whether the FATCA code and/or exempt payee code should be completed.

Line 5

Enter your address (number, street, and apartment or suite number). This is where the requester of this Form W-9 will mail your information returns.

Line 6

Enter your city, state, and ZIP code.

Part I. Taxpayer Identification Number (TIN)

Enter your TIN in the appropriate box. If you are a resident alien and you do not have and are not eligible to get an SSN, your TIN is your IRS individual taxpayer identification number (ITIN). Enter it in the social security number box. If you do not have an ITIN, see *How to get a TIN* below.

If you are a sole proprietor and you have an EIN, you may enter either your SSN or EIN. However, the IRS prefers that you use your SSN.

If you are a single-member LLC that is disregarded as an entity separate from its owner (see *Limited Liability Company (LLC)* on this page), enter the owner's SSN (or EIN, if the owner has one). Do not enter the disregarded entity's EIN. If the LLC is classified as a corporation or partnership, enter the entity's EIN.

Note. See the chart on page 4 for further clarification of name and TIN combinations.

How to get a TIN. If you do not have a TIN, apply for one immediately. To apply for an SSN, get Form SS-5, Application for a Social Security Card, from your local SSA office or get this form online at *www.ssa.gov*. You may also get this form by calling 1-800-772-1213. Use Form W-7, Application for IRS Individual Taxpayer Identification Number, to apply for an ITIN, or Form SS-4, Application for Employer Identification Number, to apply for an EIN. You can apply for an EIN online by accessing the IRS website at *www.irs.gov/businesses* and clicking on Employer Identification Number (EIN) under Starting a Business. You can get Forms W-7 and SS-4 from the IRS by visiting IRS.gov or by calling 1-800-TAX-FORM (1-800-829-3676).

If you are asked to complete Form W-9 but do not have a TIN, apply for a TIN and write "Applied For" in the space for the TIN, sign and date the form, and give it to the requester. For interest and dividend payments, and certain payments made with respect to readily tradable instruments, generally you will have 60 days to get a TIN and give it to the requester before you are subject to backup withholding on payments. The 60-day rule does not apply to other types of payments. You will be subject to backup withholding on all such payments until you provide your TIN to the requester.

Note. Entering "Applied For" means that you have already applied for a TIN or that you intend to apply for one soon.

Caution: *A disregarded U.S. entity that has a foreign owner must use the appropriate Form W-8.*

Part II. Certification

To establish to the withholding agent that you are a U.S. person, or resident alien, sign Form W-9. You may be requested to sign by the withholding agent even if items 1, 4, or 5 below indicate otherwise.

For a joint account, only the person whose TIN is shown in Part I should sign (when required). In the case of a disregarded entity, the person identified on line 1 must sign. Exempt payees, see *Exempt payee code* earlier.

Signature requirements. Complete the certification as indicated in items 1 through 5 below.

1. Interest, dividend, and barter exchange accounts opened before 1984 and broker accounts considered active during 1983. You must give your correct TIN, but you do not have to sign the certification.

2. Interest, dividend, broker, and barter exchange accounts opened after 1983 and broker accounts considered inactive during 1983. You must sign the certification or backup withholding will apply. If you are subject to backup withholding and you are merely providing your correct TIN to the requester, you must cross out item 2 in the certification before signing the form.

3. Real estate transactions. You must sign the certification. You may cross out item 2 of the certification.

4. Other payments. You must give your correct TIN, but you do not have to sign the certification unless you have been notified that you have previously given an incorrect TIN. "Other payments" include payments made in the course of the requester's trade or business for rents, royalties, goods (other than bills for merchandise), medical and health care services (including payments to corporations), payments to a nonemployee for services, payments made in settlement of payment card and third party network transactions, payments to certain fishing boat crew members and fishermen, and gross proceeds paid to attorneys (including payments to corporations).

5. Mortgage interest paid by you, acquisition or abandonment of secured property, cancellation of debt, qualified tuition program payments (under section 529), IRA, Coverdell ESA, Archer MSA or HSA contributions or distributions, and pension distributions. You must give your correct TIN, but you do not have to sign the certification.

What Name and Number To Give the Requester

For this type of account:	Give name and SSN of:
1. Individual	The individual
2. Two or more individuals (joint account)	The actual owner of the account or, if combined funds, the first individual on the account[1]
3. Custodian account of a minor (Uniform Gift to Minors Act)	The minor[2]
4. a. The usual revocable savings trust (grantor is also trustee)	The grantor-trustee[1]
b. So-called trust account that is not a legal or valid trust under state law	The actual owner[1]
5. Sole proprietorship or disregarded entity owned by an individual	The owner[3]
6. Grantor trust filing under Optional Form 1099 Filing Method 1 (see Regulations section 1.671-4(b)(2)(i)(A))	The grantor*
For this type of account:	**Give name and EIN of:**
7. Disregarded entity not owned by an individual	The owner
8. A valid trust, estate, or pension trust	Legal entity[4]
9. Corporation or LLC electing corporate status on Form 8832 or Form 2553	The corporation
10. Association, club, religious, charitable, educational, or other tax-exempt organization	The organization
11. Partnership or multi-member LLC	The partnership
12. A broker or registered nominee	The broker or nominee
13. Account with the Department of Agriculture in the name of a public entity (such as a state or local government, school district, or prison) that receives agricultural program payments	The public entity
14. Grantor trust filing under the Form 1041 Filing Method or the Optional Form 1099 Filing Method 2 (see Regulations section 1.671-4(b)(2)(i)(B))	The trust

[1] List first and circle the name of the person whose number you furnish. If only one person on a joint account has an SSN, that person's number must be furnished.

[2] Circle the minor's name and furnish the minor's SSN.

[3] You must show your individual name and you may also enter your business or DBA name on the "Business name/disregarded entity" name line. You may use either your SSN or EIN (if you have one), but the IRS encourages you to use your SSN.

[4] List first and circle the name of the trust, estate, or pension trust. (Do not furnish the TIN of the personal representative or trustee unless the legal entity itself is not designated in the account title.) Also see *Special rules for partnerships* on page 2.

*Note. Grantor also must provide a Form W-9 to trustee of trust.

Note. If no name is circled when more than one name is listed, the number will be considered to be that of the first name listed.

Secure Your Tax Records from Identity Theft

Identity theft occurs when someone uses your personal information such as your name, SSN, or other identifying information, without your permission, to commit fraud or other crimes. An identity thief may use your SSN to get a job or may file a tax return using your SSN to receive a refund.

To reduce your risk:

- Protect your SSN,
- Ensure your employer is protecting your SSN, and
- Be careful when choosing a tax preparer.

If your tax records are affected by identity theft and you receive a notice from the IRS, respond right away to the name and phone number printed on the IRS notice or letter.

If your tax records are not currently affected by identity theft but you think you are at risk due to a lost or stolen purse or wallet, questionable credit card activity or credit report, contact the IRS Identity Theft Hotline at 1-800-908-4490 or submit Form 14039.

For more information, see Publication 4535, Identity Theft Prevention and Victim Assistance.

Victims of identity theft who are experiencing economic harm or a system problem, or are seeking help in resolving tax problems that have not been resolved through normal channels, may be eligible for Taxpayer Advocate Service (TAS) assistance. You can reach TAS by calling the TAS toll-free case intake line at 1-877-777-4778 or TTY/TDD 1-800-829-4059.

Protect yourself from suspicious emails or phishing schemes. Phishing is the creation and use of email and websites designed to mimic legitimate business emails and websites. The most common act is sending an email to a user falsely claiming to be an established legitimate enterprise in an attempt to scam the user into surrendering private information that will be used for identity theft.

The IRS does not initiate contacts with taxpayers via emails. Also, the IRS does not request personal detailed information through email or ask taxpayers for the PIN numbers, passwords, or similar secret access information for their credit card, bank, or other financial accounts.

If you receive an unsolicited email claiming to be from the IRS, forward this message to *phishing@irs.gov*. You may also report misuse of the IRS name, logo, or other IRS property to the Treasury Inspector General for Tax Administration (TIGTA) at 1-800-366-4484. You can forward suspicious emails to the Federal Trade Commission at: *spam@uce.gov* or contact them at *www.ftc.gov/idtheft* or 1-877-IDTHEFT (1-877-438-4338).

Visit IRS.gov to learn more about identity theft and how to reduce your risk.

Privacy Act Notice

Section 6109 of the Internal Revenue Code requires you to provide your correct TIN to persons (including federal agencies) who are required to file information returns with the IRS to report interest, dividends, or certain other income paid to you; mortgage interest you paid; the acquisition or abandonment of secured property; the cancellation of debt; or contributions you made to an IRA, Archer MSA, or HSA. The person collecting this form uses the information on the form to file information returns with the IRS, reporting the above information. Routine uses of this information include giving it to the Department of Justice for civil and criminal litigation and to cities, states, the District of Columbia, and U.S. commonwealths and possessions for use in administering their laws. The information also may be disclosed to other countries under a treaty, to federal and state agencies to enforce civil and criminal laws, or to federal law enforcement and intelligence agencies to combat terrorism. You must provide your TIN whether or not you are required to file a tax return. Under section 3406, payers must generally withhold a percentage of taxable interest, dividend, and certain other payments to a payee who does not give a TIN to the payer. Certain penalties may also apply for providing false or fraudulent information.

CONFLICT OF INTEREST QUESTIONNAIRE

FORM CIQ

For vendor or other person doing business with local governmental entity

This questionnaire reflects changes made to the law by H.B. 1491, 80th Leg., Regular Session.

This questionnaire is being filed in accordance with Chapter 176, Local Government Code by a person who has a business relationship as defined by Section 176.001 (1-a) with a local governmental entity and the person meets requirements under Section 176.006(a).

By law this questionnaire must be filed with the records administrator of the local governmental entity not later than the 7th business day after the date the person becomes aware of facts that require the statement to be filed. *See* Section 176.006, Local Government Code.

A person commits an offense if the person knowingly violates Section 176.006, Local Government Code. An offense under this section is a Class C misdemeanor.

OFFICE USE ONLY

Date Received

1 **Name of person who has a business relationship with local governmental entity.**

2 ☐ **Check this box if you are filing an update to a previously filed questionnaire.**

(The law requires that you file an updated completed questionnaire with the appropriate filing authority not later than the 7th business day after the date the originally filed questionnaire becomes incomplete or inaccurate.)

3 **Name of local government officer with whom filer has employment or business relationship.**

Name of Officer

This section (item 3 including subparts A, B, C & D) must be completed for each *officer* with whom the filer has an employment or other business relationship as defined by Section 176.001 (1-a), Local Government Code. Attach additional pages to this Form CIQ as necessary.

A. Is the local government officer named in this section receiving or likely to receive taxable income, other than investment income, from the filer of the questionnaire?

☐ Yes ☐ NO

B. Is the filer of the questionnaire receiving or likely to receive taxable income, other than investment income, from or at the direction of the local government *officer* named in this section AND the taxable income is not received from the local governmental entity?

☐ Yes ☐ NO

C. Is the filer of this questionnaire employed by a corporation or other business entity with respect to which the local government officer serves as an *officer* or director, or holds an ownership of 10 percent or more?

☐ Yes ☐ NO

D. Describe each employment or business relationship with the local government *officer* named in this section.

4

Signature of person doing business with the governmental entity

Date

Adopted *06/29/2007*

You can make your banking easier through an ACH Vendor Payment service (direct deposit) available from Galveston County. With an ACH Vendor Payment, you can choose to have your payments deposited directly into your checking or savings account at your designated bank, savings and loan, credit union, or any other member of an automated clearing house.

Direct deposit is safe. No worries about lost or stolen checks. No danger of fraud or forged checks.

You will receive your notice of deposit by email along with the same payment information previously noted on your check stub.

Your payments should be available in your account as approved by commissioner's court. The funds will be sent to your financial institution upon approval of the court.

Once you start direct deposit you will need to notify us in writing immediately if you change banks or account numbers. We will need at least a two week written notice to stop any direct deposit.

Thank You,

Kevin C. Walsh, CPA
Galveston County Treasurer

GALVESTON COUNTY DIRECT DEPOSIT
VENDOR/EMPLOYEE AUTHORIZATION FORM

County EMPLOYEE ☐ **County VENDOR** ☐

NAME (please Print or Type):_____

TIN#/SSN#/EMPLOYEE ID:_____

ADDRESS:_____

TELEPHONE NUMBER:_____ **CONTACT PERSON:**_____

EMAIL (*required):_____

☐ I (We) authorize Galveston County, to deposit payments into my (our) account. If Galveston County erroneously deposits funds into my (our) account, I (we) authorize Galveston County to initiate the necessary debit entries, not to exceed the total of the original amount credited for the current payment. This authorization will remain in effect until Galveston County has received written notice of termination and Galveston County has had reasonable opportunity to act on it. I (we) understand that a notice of deposit will be emailed by the Galveston County Treasurer's office. To make any changes, I (we) agree to submit a new Direct Deposit Authorization form with the updated information. If any action or inaction taken by the vendor results in non-acceptance of a direct deposit by the Financial Institution, vendor acknowledges that Galveston County has no responsibility to issue another payment until the funds are returned to the County. If non-acceptance by the Financial Institution is the result of action or non-action by the vendor, late fees and penalties do not apply to Galveston County and Galveston County is not responsible for any bank fees you may incur.

FINANCIAL INSTITUTION NAME:_____

CITY:_____ **STATE:**_____ **ZIP:**_____

ROUTING NUMBER:_____ **BANK ACCOUNT NO:**_____

CHECKING ☐ **SAVINGS** ☐

ATTACH A VOIDED CHECK/OFFICIAL DOCUMENTATION FROM FINANCIAL INSITUTION

☐ I (We) decline Galveston County's offer of direct deposit payments into my (our) account. I (we) understand that the decision to opt into direct deposit can be changed at any time by submitting a new Direct Deposit Authorization form.

PRINTED NAME:_____**TITLE:** _____

AUTHORIZED SIGNATURE:_____**DATE:**_____

PLEASE RETURN THIS FORM TO THE GALVESTON COUNTY TREASURER'S OFFICE

722 Moody Ave-4th Floor, Galveston, TX 77550 Phone: 409-770-5395, Fax: 409-770-5386, Email: EFTPAY@co.galveston.tx.us

For Office Use Only

PEID#:_____ Entered By:_____ Date Entered:_____

County of Galveston

ACKNOWLEDGMENT AND CERTIFICATION REGARDING DEBARMENT, SUSPENSION, AND OTHER INELGIBILITY

Executive Orders 12549 & 12689 Certification, Debarment and Suspension

Solicitation Number: RFP #B181016

Solicitation Title: Bolivar Beach Pavilion

Contractor hereby CERTIFIES that:

Contractor, and all of its principals, is not presently debarred, suspended, proposed for debarment, proposed for suspension, or declared ineligible under Executive Order 12549 or Executive Order 12689, Debarment and Suspension, and is not in any other way ineligible for participation in Federal or State assistance programs;

Contractor, and all of its principals, were not and have not been debarred, suspended, proposed for debarment, proposed for suspension, or declared ineligible under Executive Order 12549 or Executive Order 12689, Debarment and Suspension, and were not and have not been in any other way ineligible for participation in Federal or State assistance programs at the time its' proposal was submitted in the procurement identified herein and at any time since submission of its' proposal;

Contractor has included, and shall continue to include, this certification in all contracts between itself and any sub-contractors in connection with services performed under this contract; **and**

Contractor shall notify Galveston County in writing immediately, through written notification to the Galveston County Purchasing Agent, if Contractor is not in compliance with Executive Order 12549 or 12689 during the term of its contract with Galveston County.

Contractor **Represents** and **Warrants** that the individual executing this Acknowledgment and Certification on its behalf has the full power and authority to do so and can legally bind the Contractor hereto.

_____	_____
Name of Business	Date
By: _____	_____
Signature	Printed Name & Title

DOCUMENT 00101

Specific Provisions for the Proposal

SECTION 00101
SPECIFIC PROPOSAL PROVISIONS

DETERMINATION OF THE RECOMMENDED PROPOSAL

In determining the best responsible Proposal, Galveston County will evaluate the information derived from the Contractor's Qualification Statement required and included with the Proposal. The criteria and point weighting utilized for determining the most desirable Proposal includes the following:

1) The amount of the Base Proposal and each Alternate Proposal (30 points)
2) The length of construction time proposed (time is of the essence). (5 points)
3) References from **all** previous contracts comparable to this contract size and scope during the last five years. (10 points)
4) Based upon references listed above the probability of quality construction work. (15 points)
5) The quality and availability of the Proposer's personnel and services. (10 points)
6) Listing of proposed subcontractors, suppliers, and other team members. (5 points)
7) Based upon references listed above the probability of satisfactory post construction maintenance, repair, and service for emergency warranty work. (5 points)
8) Based upon references listed above the probability of satisfactory timely completion of the work. (5 points)
9) The Proposer's safety record including the current EMR (experience modifier rate). (5 points)
10) The Proposer’s history of claims, mediation, litigation or arbitration with any Owner in the past 5 years. (10 points)
11) The Proposer's historic compliance with laws and codes governing construction activities. (5 points)

DOCUMENT 00102

Agreement Between Galveston County and Contractor

Agreement between Galveston County and Contractor

Agreement for Galveston County Project # B181016

This contract is entered into between Galveston County and the Contractor named below pursuant to Sub chapter B, Chapter 271, Texas Local Government Code, and the referenced Request for Competitive sealed Proposal.

Contract No:_____

Proposal No: _____

Contractor:_____

Galveston County Authorized Representative:

Article I.

The Work

Section 1.01 The Contractor and Galveston County agree that the materials and equipment to be furnished and the work to be done by the Contractor are as follows:

Construct Road and Bridge Office and Warehouse facility as represented in the Contract Documents

Section 1.02 The Contractor shall be held accountable for the following Project related responsibilities: furnish all labor and supervision; furnish, supply and install all equipment, material, supplies, tools, scaffolding, hoisting, transportation, unloading and handling; do all things required to complete the work described above on the Project all in accordance with the drawings and Project Manual prepared by the Architect or Engineer; and furnish all necessary information, shop drawings, details, samples, brochures, etc. For Owner/Architect or Engineer approval, as may be required.

Article II.

Time of Commencement and Completion

Section 2.01 The Contractor shall start the work upon notice to proceed and shall execute the work with diligence and dispatch so as to maintain such schedules and milestones as established by Galveston County's authorized Representative. The Contractor agrees to complete portions and the whole of the work by the following anticipated dates: Insert Schedule

Section 2.02 The Contractor is cautioned that schedules and milestones are subject to review and revision**,** and in such event, such revisions will be made available for the Contractor's information at the office of Galveston County's authorized Representative. It is the sole responsibility of the Contractor to attend job meetings, keep itself informed of any revisions**,** and conform to any such revisions.

Section 2.03 In the event the Contractor should fail to maintain Galveston County's authorized Representative's progress schedule, or the schedule as established above, Galveston County reserves the right, after 48 hours formal notice, either by letter or telegram to the Contractor, to procure the materials, equipment, and labor necessary to proceed with, or to complete the work, or any portion thereof from other sources and charge the cost thereof to the Contractor.

Section 2.04 Time is of the essence in this Agreement.

Article III.

The Contract Sum

Section 3.01 Galveston County agrees to pay the Contractor for the satisfactory performance of his work the total sum of:

_____Dollars and xx/100

($_____), payments to be made as described herein in current funds subject to additions and deductions for changes, as may be agreed upon in writing, and to make payments on account thereof as follows:

Section 3.02 On the established day of each month, the Contractor shall deliver to Galveston County through Galveston County's authorized Representative a detailed, quadruplicate statement acceptable to Galveston County's authorized Representative, and if required, supported by receipts, vouchers, etc. showing values of all materials delivered and work completed up to the established billing date for which payment is requested. Monthly and final payments will be made to the Contractor from Galveston County. It is specifically understood and agreed that prior to submission of the first statement**,** the Contractor will deliver to Galveston County's authorized Representative, for review and approval, a detailed breakdown of this contract sum showing a schedule of values for the various parts of the work Once accepted by Galveston County's authorized Representative, this schedule of values will be used as a basis for checking the Contractor's monthly statement.

Section 3.03 The Contractor shall, with the second and each succeeding monthly request for payment, submit receipts and/or an affidavit and waiver of bond claim showing all payments made for labor and materials and on account for all work covered in the previous months request for payment. Affidavit and waiver of bond claims may be required to be submitted from

Contractors, suppliers, and/or Sub-Contractors (all tier). The Contractor shall be required to execute a general release satisfactory to Owner, prior to receiving final payment.

Section 3.04 Five percent **(**5%) of each payment shall be retained**,** unless specific provisions to the contrary are indicated in the contract documents.

Section 3.05 No payment made under this Agreement, including the final payment**,** shall be conclusive evidence of the performance of the work**,** either wholly or in part**,** and no payment shall be construed as an acceptance of defective work or improper materials.

Section 3.06 The Contractor shall save and keep Galveston County's authorized Representative**,** Galveston County and Galveston County's property free from all claims**,** including bond claims**,** legal or equitable, arising out of the Contractor's work hereunder**.** I n the e vent any such claim is filed by anyone claiming by, through**,** or under the Contractor**,** the Contractor shall remove and discharge same, by bonding or otherwise, within five (5) days of the filing thereof.

Article IV.

The Contract Documents

Section 4.01 The contract documents consist of this Agreement and any exhibits attached hereto; Proposal Documents, Proposal Form, General Conditions of the Contract, the Project Manual, the Drawings, and all addenda issued prior to and all modifications issued after execution of the Agreement between Galveston County and Galveston County's authorized Representative and agreed upon by the parties.

Section 4.02 The Contractor agrees to perform the work under the general direction of Galveston County's authorized Representative and subject to the final approval of the Architect, Engineer, or other specified representative of Galveston County, in accordance with the contract documents.

Section 4.03 Contract documents are available, at reasonable times, at the office of Galveston County's authorized Representative for examination by the Contractor.

Section 4.04 No extra work shall be performed under this Agreement, except upon receipt of a written order from Galveston County's authorized Representative or Galveston County.

The Specifications and Drawings are enumerated as follows:

Project Manual ..... Dated 12/12/2017

Drawings xxxx ..... Dated 12/12/2017

Addenda xxxx ..... Dated 03/xx/2018

Article V.

Insurance and Indemnity

Section 5.01 The Contractor agrees to, at the time of execution of this Agreement, furnish Galveston County's authorized Representative with certificates of insurance from an insurance company (or other source) acceptable to Galveston County. These certificates should certify that the Contractor is protected on the work with worker's compensation and employer's liability, public liability and bodily injury, property damage insurance, and any other insurance as required by the contract documents and in accordance with the attachment to this Agreement. The Contractor will not be permitted to start work at the site until these certificates are filed with Galveston County. Compliance by the Contractor with the foregoing requirements, as to carrying insurance and furnishing certificates, shall not relieve the Contractor of its liabilities and obligations.

Section 5.02 For ten ($10.00) dollars and other good and valuable consideration, the receipt whereof is hereby acknowledged, and to the fullest extent permitted by law, the Contractor agrees to indemnify and hold harmless Galveston County, Galveston County's authorized Representative, the Architect or Engineer, and all of their agents and employees from and against claims, damages, losses and expenses, including but not limited to attorneys' fees arising out of or resulting from the performance or failure in performance of the Contractor's work under this Agreement provided that any such claim, damage, loss, or expense (1) is attributable to bodily injury, sickness, disease, or death, or to injury to or destruction of tangible property including the loss of use resulting therefrom, (2) is caused, in whole or in part, by any negligent act or omission of the Contractor or anyone directly or indirectly employed by the Contractor, or anyone for whose acts the Contractor may be liable, regardless of whether caused in part by a party indemnified hereunder. Such obligations shall not be construed to negate, abridge, or otherwise reduce any other right or obligation of indemnity which would otherwise exist as to any party or person described in this paragraph. In any and all claims against Galveston County's authorized Representative, or any of its agents or employees, by any employee of the Contractor, or anyone directly or indirectly employed by the Contractor, or anyone for whose acts he may be liable, the indemnification obligation under this paragraph 5.02 shall not be limited in any way by any limitation on the amount or type of damages, compensation, or benefits payable by or for the Contractor under worker's compensation acts, disability benefit acts, or other employee benefit acts.

Section 5.03 The obligations of the Contractor, under paragraph 5.02, shall not extend to the liability of the Architect or Engineer, his agents, or employees, arising out of the preparation or approval of maps, drawings, opinions, reports surveys, change orders, designs, or Project Manual and/or the giving of or failure to give directions or instructions by the Architect or Engineer, his agents or employees, providing such giving or failure to give is the primary cause of the injury or damage

Section 5.04 The Contractor agrees to obtain, maintain, and pay for such contractual liability insurance coverage and endorsements as will insure the indemnification obligation of the Contractor pursuant to paragraph 5.02 above.

Article VI.

Performance Bond and Labor and Material Payment Bond

Section 6.01 The Contractor agrees to furnish and pay for a 100% Performance Bond and a 100% Labor and Material Payment Bond on the bond forms issued with this Agreement naming the Galveston County as Obligee. Bonds must be issued by a company acceptable to Galveston County and must be accompanied by a Power of Attorney. The bonds are to be delivered with this executed Agreement.

Article VII.

Warranty

Section 7.01 The Contractor agrees to promptly make good, without cost to Galveston County, any and all defects, due to faulty workmanship and/or materials, which may appear within the guarantee or warranty period so established in the contract documents. If no such period is stipulated in the contract documents, then such guarantee shall be for a period of one (1) year from date of substantial completion and acceptance of the work by Galveston County. The Contractor further agrees to provide any and all guarantees as required by the terms of the contract documents, as a condition precedent to final payment

Article VIII.

Changes in the Work

Section 8.01 The Contractor may be ordered in writing by Galveston County, without invalidating this Agreement, to make changes in the work within the general scope of this Agreement. These changes may consist of additions, deletions, or other revisions, the contract sum and the contract time being adjusted accordingly. The Contractor, prior to the commencement of such changed or revised work, shall submit promptly to Galveston County's authorized Representative written copies of any claim for adjustment to the contract sum and contract time for such revised work in a manner consistent with the contract documents

Section 8.02 Where changes in the work involve both additions and deletions, percentages for overhead and profit shall be applied to the net increase of such values for labor and materials.

Section 8.03 The amount to be paid by Galveston County for changes in the work, as outlined in paragraph 8.01 above, shall be made on the basis of one of the following methods:

a) by mutual acceptance of a lump sum properly itemized and supported by sufficient substantiating data to permit evaluation and agreed upon by Galveston County's authorized Representative and the Contractor, or

b) by unit prices stated in the contract documents, or

c) if no such unit prices are set forth and if the parties cannot agree upon a lump sum, then the actual net cost in money to the Contractor of materials and labor (including insurance and applicable taxes) required, plus rental of plant equipment (other than small tools and small equipment) plus compensation for overhead and for profit as noted in Article 12. (Field overhead will not be considered as part of actual net cost), or

d) by the method provided in subparagraph 8.04.

Section 8.04 If none of the above methods set forth in clauses 8.03 (a), 8.03 (b), 8.03 (c) is agreed upon, the Contractor, provided he receives a written order signed by Galveston County shall promptly proceed with the work involved. The cost of such work shall be determined by Galveston County's authorized Representative on the basis of reasonable expenditures and savings of those performing the work attributable to the change, including, in the case of an increase in the contract sum, a reasonable allowance for overhead and profit. In such case, and also under clauses 8.03 (c) and 8.03 (d) above, the Contractor shall keep and present, in such form as Galveston County's authorized Representative may prescribe, an itemized accounting together with appropriate supporting data for inclusion in a change order. Unless otherwise provided in the contract documents, cost shall be limited to the following: cost of materials including cost of delivery, cost of labor including social security, old age and unemployment insurance and fringe benefits required by Agreement or custom; workers or workmen's compensation insurance; bond premiums; rental value of equipment and machinery; and the additional costs of supervision and field office personnel directly attributable to the change. Pending final determination of cost, payments, on account shall be made as determined by Galveston County. The amount of credit to be allowed by the Contractor for any deletion or change which results in a net decrease in the contract sum will be the amount of the actual net cost as confirmed by Galveston County. When both additions and credits covering related work or substitutions are involved in any one change, the allowance for overhead and profit shall be figured on the basis of the net increase, if any with respect to that change.

Section 8.05 Owner's Audit

a) Owner's duly authorized representative shall have access, at all reasonable times, to all Contractor's personnel, books, records, correspondence, instructions, plans, drawings, receipts, vouchers and memoranda of every description pertaining to any change(s) for the purpose of auditing and verifying Contractor's net cost of change or for any other reasonable purpose. Owner's representative shall have the right to reproduce any of the aforesaid documents. Contractor shall preserve, and shall cause its Contractors to preserve all the aforesaid documents for a period of two years after the completion and acceptance or termination of work.

Section 8.06 For work performed by a Sub-Contractor, the Contractor will be allowed to add 5% only and said Sub-Contractor mark-up shall not exceed the agreed upon percentages noted in Article 12 for overhead and profit

Article IX.

Contractor Responsibilities

Section 9.01 The Contractor shall provide sufficient, safe, and proper facilities at all times for the inspection of the work by Galveston County and Galveston County's authorized Representative , or their authorized representatives. The Contractor shall, within a 24-hour notice from Galveston County's authorized Representative, proceed to take down all portions of the work and remove from the grounds or buildings, all materials, whether worked or un-worked, which Galveston County's authorized Representative, Galveston County, or their authorized representatives shall condemn as unsound or improper, or as in any way failing to conform to the contract documents. The Contractor shall make good at its own expense, all work damaged or destroyed thereby

Section 9.02 The Contractor agrees, in the performance of this Agreement, to comply with all federal, state, municipal, and local laws, ordinances, codes and governing regulations, to pay all costs and expenses required thereby; to pay all fees, charges, assessments, and taxes, and to pay all fringe and other benefits required by Agreement or law.

Section 9.03 The Contractor shall pay all royalties and license fees. He shall defend all suits or claims for infringement of any patent rights and shall save Galveston County, Galveston County's authorized Representative, and Architect or Engineer harmless from loss on account thereof, except that Galveston County shall be responsible for all such loss when a particular design, process or the product of a particular manufacturer or manufacturers is specified, but if the Contractor has reason to believe that the design, process or product specified is an infringement of a patent, he shall be responsible for such loss unless he promptly gives such information to Galveston County.

Section 9.04 Should the Contractor become insolvent, or at any time, refuse or neglect to supply a sufficiency of properly skilled workers, or equipment and materials of the proper quality, or fail in any respect to prosecute the work with promptness and diligence, or fail in the performance of any of the Agreements herein contained, Galveston County shall be at liberty, after 48 hours written notice to the Contractor, to provide any such labor, equipment,, and materials and deduct the cost thereof, from any money then due or thereafter to become due to the Contractor, under this Agreement. In the event of such refusal, neglect, or failure Galveston County shall also be at liberty to terminate the employment of the Contractor. Consequently, Galveston County may enter upon the premises to take possession, for the purpose of completing the work included under this Agreement, of all materials, tools, and appliances thereon, and to employ any other person or persons to finish the work and provide the materials therefore. In case of such discontinuance of the employment, the Contractor shall not be entitled to receive any further payment under this Agreement until the said work shall be wholly finished. If the unpaid balance of the amount to be paid under this Agreement shall exceed the expense incurred by Galveston County in finishing the work, such excess shall be paid by Galveston County to the Contractor. If such expense shall exceed such unpaid balance, the Contractor shall pay the difference to Galveston County. The expense incurred by Galveston County, as herein provided, either for

furnishing materials, or finishing the work, and any damage incurred through such default, shall be chargeable to the Contractor

Section 9.05 Notwithstanding the above paragraph, Galveston County reserves the right to terminate this Agreement for its convenience upon written notice to the Contractor. In such instance the Contractor will be paid its share of the contract amount proportionate to the percentage of its work completed and other reasonable cancellation costs incurred as a result of said termination. No payments shall be made for anticipated overhead and profit. Prior to making any payments under this clause, the Owner shall have the right to audit the records of the Contractor

Section 9.06 The Contractor agrees to adhere to the federal Occupational Safety & Health Act, state and local safety regulations and Galveston County's authorized Representative's safety and health program so as to avoid injury or damage to persons or property, and to be directly responsible for damage to persons and property resulting from failure to do so.

Section 9.07 In the event the Contractor after a 24-hour written notice from Galveston County, Galveston County's authorized Representative, or duly authorized representative, fails to take corrective action to insure compliance with said safety regulations or removal of rubbish and debris resulting from his work, Galveston County shall undertake these obligations and charge the cost of same to the Contractor's account without further notice to the Contractor.

Section 9.08 The Contractor agrees to notify Galveston County's authorized Representative's representative on the jobsite of all accidents which may occur to persons or property and shall provide Galveston County's authorized Representative's representative with a copy of all accident reports on appropriate forms. All reports shall be signed by the Contractor or his authorized representative and submitted within five (5) days of occurrence

Section 9.09 The Contractor shall procure its materials from such sources, and employ such labor subject to contract terms and conditions in order to ensure harmonious labor relations on the site and prevent strikes or labor disputes by its employees or other trade employees. The Contractor, in the event of a labor dispute including strikes, shall take whatever action is required in order to prevent the disruption of work on the Project site.

Section 9.10 The Contractor will not assign this Agreement, nor any moneys due or to become due under this Agreement, nor sublet the whole or any part of the work to be performed hereunder, without the written consent of the Owner and Galveston County's authorized Representative. In the event of such a consent, a Sub-Contractor must comply with all the requirements of this Agreement.

Section 9.11 The Contractor agrees that all disputes concerning the jurisdiction of trades shall be adjusted in accordance with any plan for the settlement of jurisdictional disputes which may be in effect either nationally or in the locality in which the work is being done. The Contractor shall be bound by, and shall abide by, all such adjustments and settlements of jurisdictional disputes, whether or not the Contractor is signature bound by the Agreement establishing the impartial

jurisdictional disputes board and/or its successors. The Contractor agrees not to cause a work stoppage, due to the jurisdictional assignment of work

Section 9.12 The Contractor shall submit to Galveston County's authorized Representative upon request, copies of orders placed for the various materials required for the Project or authentic stock lists if such material is normally a stock item. Order copies need not reflect prices but should indicate type of material, quantity, vendor name, and address, etc. The Contractor shall be required to submit to Galveston County's authorized Representative a monthly material status report, or more often if required by Galveston County's authorized Representative, as a prerequisite for the monthly progress payment. The Contractor shall notify Galveston County's authorized Representative immediately upon learning of a change of status of any material, equipment, or supplies

Section 9.13 The Contractor shall continuously and adequately protect all his work and will immediately replace all damaged and defective work

Section 9.14 The Contractor agrees to maintain an adequate force of experienced workers and the necessary materials, supplies, and equipment to meet the requirements of Galveston County's authorized Representative and other trades in order to maintain construction progress schedules, as established by Galveston County's authorized Representative. In the event that his force is, in the judgment of Galveston County's authorized Representative , inadequate to meet the established schedules during the regular working hours, the Contractor agrees to work sufficient overtime hours or increase his work force to meet such schedules at no extra cost to Galveston County. If for reasons not already stated, Galveston County's authorized Representative requires and directs the Contractor to work overtime, including Saturdays, Sundays or Holidays, the Contractor will be reimbursed the net premium rate only. The net premium rate is understood to mean the actual premium labor cost, including applicable taxes and wage additives required by trade Agreement or by law, but without additives for overhead, labor efficiency, or profit.

Section 9.15 The Contractor agrees to employ competent administrative, supervisory, and field personnel to accomplish the work, including layout and engineering and preparation and checking of shop drawings. If required, the Contractor shall substantiate this employment of competent personnel to Galveston County's authorized Representative's satisfaction before initiating any work

Section 9.16 The Contractor shall insure that all construction tools, equipment, temporary facilities, and other items used in accomplishing the work, whether purchased, rented, or otherwise provided by the Contractor or provided by others, are in a safe, sound, and good condition, must be capable of performing the functions for which they are intended and must be maintained in conformance with applicable laws and regulations

Section 9.17 If the Contractor is delayed at any time in the progress of the work by any act or neglect of the Owner, Galveston County's authorized Representative, or the Architect or Engineer, or by any employee of either, or by any separate contractor employed by the Owner, or by changes ordered in the work, or by labor disputes, fire, unusual delay in transportation,

adverse weather conditions not reasonably anticipatable, unavoidable casualties or any causes beyond the Contractor's control, or by delay authorized by the Owner or Galveston County's authorized Representative, or by any other cause which Galveston County's authorized Representative determines may justify the delay, then the contract time shall be extended by amendment for such reasonable time as Galveston County's authorized Representative and Owner may determine.

Section 9.18 Right-To-Know each Contractor is required to implement the provisions of the right-to-know law, if any, as enacted by the state in which the work is being performed. Before using on site any material listed in the right-to-know substance list, each Contractor will furnish Galveston County's authorized Representative a copy of the material safety data sheet for that substance

Section 9.19 In the event the Contractor employs independent contractors, as well as payroll labor, to discharge its obligations hereunder, the Contractor acknowledges and understands that it does so at its own risk and that federal, state and/or local agencies may dispute the independent contractor status and assess penalties, fines, and costs should there be a determination to reclassify such workers. In that event, the Contractor agrees that it will defend, indemnify and hold Galveston County harmless from any fines, costs, damages, penalties, attorneys fees, and causes of action, including without limitation, personal injury or property damage, arising out of or relating in any way to such a determination.

Article X.

Galveston County's authorized Representative Responsibilities

Section 10.01 Galveston County's authorized Representative will be the Owner's representative and will administer the contract as described in the contract documents. Galveston County's authorized Representative will advise and consult with the Owner. Galveston County's authorized Representative will have authority to act on behalf of the Owner to the extent provided in the contract documents, as they may be modified by change order in accordance with other provisions of the trade contract

Section 10.02 The Contractor agrees to perform the work under the general direction and coordination of Galveston County's authorized Representative in accordance with the contract documents. Any directive given by Galveston County's authorized Representative shall be binding on the Contractor.

Section 10.03 Galveston County's authorized Representative, acting for the Owner and subject to the Owner's delegation of such authority, may perform all tasks necessary or appropriate to administer and manage the trade contract, and undertake any action with respect to the Contractor, that the Owner is entitled to undertake.

Section 10.04 Galveston County's authorized Representative shall not give instructions or orders directly to employees or workers of the Contractor, except to persons designated as authorized representatives of the Contractor.

Article XI.

Equal Opportunity

Section 11.01 During the performance of this Agreement, the Contractor agrees not to discriminate against any employee or applicant for employment because of race, color, religion, sex, or national origin. The Contractor will take affirmative action to insure that applicants are employed without regard to their race, color, religion, sex, or national origin. The Contractor will comply with all provisions of Executive Order No. 11246, Section 503 of the Rehabilitation Act of 1973, as Amended, the Vietnam Era Veterans' Readjustment Assistance Act of 1974, as Amended, (38 U.S.C. 4212) and their implementing regulations at 41 CFR Chapter 60.

Article XII.

Alterations

Section 12.01 Refer to the Proposal Form for the overhead and profit allowable under Article 8.03. A, 8.03 B, 8.03 C: _____% Overhead, _____% Profit

Article XIII.

Complete Agreement

Section 13.01 This Agreement, together with all documents, Project Manual, drawings, incorporated herein by reference, constitute the entire Agreement between Galveston County and Contractor. There are no terms, conditions, or provisions, either oral or written, between the parties hereto, other than those contained herein. This Agreement supersedes any and all written representations, inducements, or understandings of any kind or nature between the parties hereto, relating to the particular Project involved herein

Section 13.02 The said parties for themselves, their heirs, successors, executors, administrators and assigns, do hereby agree to the full performance of the covenants herein contained.

This Contract is issued pursuant to award made by Commissioners' Court on _____, 20___.

EXECUTED this ____ day of _____, 20___.

COUNTY OF GALVESTON, TEXAS

BY: _____
Mark Henry, County Judge

ATTEST:

_____

Dwight Sullivan, County Clerk

CONTRACTOR

_____

BY: _____
Signature - Title

_____
Printed Name

DOCUMENT 00103

00103 General Terms & Conditions of the Contract

Galveston County Project B181016
Bolivar Beach Pavilion

GENERAL CONDITIONS OF THE CONTRACT

Article

1.····· CONTRACT DOCUMENTS
- a.....The Work
- b. ....The Project
- c.....The Proposal Package
- d. ....Abbreviations
- e.....General Definitions

2..... EXECUTION, CORRELATION, AND INTENT
3..... OWNERSHIP AND USE OF DOCUMENTS
4. ..... OWNER
- a.....Definition
- b. ....Information and Services Furnished by the Owner

5.····· ARCHITECT OR ENGINEER
- a.....Definition
- b. ....Architect or Engineer Duties During Construction

6.····· CONSTRUCTION MANAGER
- a.....Definition
- b. ....Administration of the Contract

7. ..... CONTRACTOR
- a.....Definition
- b. ....Review of Contract Documents
- c.....Supervision and Construction Procedures
- d. ....Labor and Materials

8. ..... WARRANTY
9. ..... TAXES
10.····· SUPERINTENDENT
11..... DRAWINGS AND PROJECT MANUAL AT THE SITE
12..... USE OF SITE
13.····· COMMUNICATIONS
14.····· SUB-CONTRACTORS
- a.....Definition
- b. ....Award of Sub-Contractors and other portions of the Work
- c.....Sub-Trade contractual relations

15.····· SEPARATE CONTRACTS
- a.....Mutual responsibility of Contractors

16..... GOVERNING LAW AND VENUE
17.····· INDEMNIFICATION
18.····· CLAIM FOR DAMAGES
19.····· RIGHTS AND REMEDIES
20..... TESTS 21. ..... INTEREST
22. ..... TIME
- a.....Definitions
- b. ....Progress and Completion
- c.....Delays and Extension of Time

23..... PAYMENTS AND COMPLETION
- a.....Progress Payments

b. ....Payments withheld
c.....Failure of Payment
d. ....Substantial Completion
e.....Final Completion and Final Payment
24..... PROTECTION OF PERSONS PROPERTY
25..... EMERGENCIES
26. ..... INSURANCE
A.....Contractor Liability Insurance
B. ....Property Insurance
27..... CHANGES IN THE WORK
a.....Change Authorization/Contract Amendments
b. ....Concealed Conditions
c.....Claims for Additional Cost
28..... UNCOVERING AND CORRECTION OF WORK
a.....Uncovering Work
b. ....Correction of Work
29..... TERMINATION OF THE CONTRACT
a.....Termination by the Contractor
b. ....Termination by the Owner or Construction Manager
c.....Termination for Convenience
30..... TEMPORARY SERVICES AND SYSTEMS
a.....Temporary Electric System
b. ....Temporary Heating
c.....Temporary Water
d. ....Housekeeping-Cleaning, Rubbish and Trash removal
e.....Vehicle Cleaning-Trucking
f. .....Site Security
g. ....Personnel and Property Protection
31..... ORDER OF PRECEDENCE
32..... WAGE RATES
33..... FORCE MAJEURE
34. ..... SALVAGE
35..... OPEN RECORDS
36..... PERFORMANCE AND PAYMENT BOND(S)

SECTION 00200
General Terms and Conditions of the Contract

1. Contract Documents

A. The Work - For the purpose of this document, the term "Work" is the work defined in Article 1 of the Trade Contract

B. The Project is the total construction to be performed under the Agreement between the Owner and Galveston County's authorized Representative of which the Work is a part.

C. Proposal Package

1. The project is to be constructed under a multi-contract (Proposal Package) arrangement utilizing multiple contracts. The Scope of Work (description of the portion of work) for each "Proposal Package" including an index of respective Drawings and Project Manual Sections shall be specified in the "Competitive Sealed Proposal Form" which form is a part of each "Proposal Package".
2. The work to be performed by each separate Contractor shall be as specifically defined in the Proposal Form for each separate Contract (Proposal Package under " Scope of Work") and subsequently inserted in Article 1 of the Agreement. Note: The Scope of Work of a Contract (Proposal Package) may:
   a. Require work to be performed which is covered under more than one (1) section of the Project Manual; and/or
   b. Require the performance of one or more items of work which are only a part of the work covered by a section of the Project Manual
3. Where the Scope of Work of any separate (Proposal Package) requires the performance of an item of work, said item of work shall be performed in full accordance with the requirements of the applicable Sections of the Project Manual, or the applicable part thereof.

D. Abbreviations

1. The language of the Project Manual and elsewhere in the Contract Documents is of the abbreviated type in certain instances, and implies words and meanings which will be appropriately interpreted.
2. Actual word abbreviations of a self-explanatory nature have been included in the Project Manual and Drawings. These are generally defined in the Project Manual Sections at the first instance of use of each term so abbreviated.
3. Singular words will be interpreted as plural and plural words will be interpreted as singular wherever applicable and the full context of the requirements so indicates.

E. General Definitions

1. The word "County" in this contract refers to the County of Galveston.
2. The word "Contractor" refers to the person or entity agreeing to perform the work in this contract and is also referred to as the "Contractor"
3. "Program Administrator" refers to the person designated by County to act on its behalf in administering this contract.
4. "Provide", or "perform": To supply, install and connect up complete and ready for safe and regular operation of particular work referred to unless specifically noted otherwise.
5. "Furnish" to supply, deliver to site and transfer to others for installation.
6. "Install": To receive, unload, distribute, construct, erect, mount, and connect complete with related accessories.
7. "Supply": To purchase, procure, acquire and deliver complete with related accessories.
8. "Product": The term "product" shall include materials, equipment and systems.
9. "As approved": Where used in conjunction with the Galveston County's authorized Representative's or the Architect or Engineer's response to submittals, requests, applications, inquiries, reports and claims by the Contractor, the meaning of the term "approved" shall not exceed the limitations of the Galveston County's authorized Representative's or the Architect or Engineer's responsibilities and duties as established in the contract documents.

a. In no case shall "approval" by Galveston County's authorized Representative or the Architect or Engineer be interpreted as a release of the Contractor from responsibilities to fulfill the requirements of the Contract Documents.

b. "Approval", where required for an item, shall be obtained from the Architect or Engineer through Galveston County's authorized Representative in writing.

10. The term "Indicated" is a cross reference to details, notes, or schedules on the drawings, other paragraphs or schedules in the Project Manual, and similar means of recording requirements in the Contract Documents.

a. Where terms such as "shown", "noted", "scheduled", and "specified" are used instead of "indicated, it is for purpose of helping the reader accomplish the cross reference, and no limitation of location is intended except as specifically noted.

11. "Directed", "Requested", Etc.: Where not otherwise explained, terms such as "directed", "requested", "authorized", "selected", "approved", "required", "accepted", and "permitted" mean "directed by the Architect or Engineer, Galveston County's authorized Representative or Owner's Representative", "requested by the Architect or Engineer, Galveston County's authorized Representative or Owner's Representative", etc. However, no such implied meaning will be interpreted to extend the Architect or Engineer's or Galveston County's authorized Representative's responsibility in the Contractor's area of construction supervision.

12. "Installer": The person or entity engaged by the Contractor or his or Sub-Contractor for the performance of a particular unit of work at the project site, including installation, erection, application and similar required operations. It is a general requirement that installers be recognized experts in the work they are engaged to perform.

13. "Suitable", "reasonable", "proper", "correct" and "necessary": Such terms shall mean as suitable, reasonable, proper, correct, or necessary for the purpose intended as required by the contract documents, subject to the judgment of the Architect or Engineer or Galveston County's authorized Representative.

14. "Including", "Such as": The terms "including" and "such as" shall always be taken in most inclusive sense, namely, "including, but not limited to", and "such as, but not limited to"

15. "Option": The term "option" shall mean a choice from the specified products or procedures which shall be made by the Contractor. The choice is not "whether" the work is to be performed, but "which" product or "which" procedure is to be used. The product or procedure chosen by the Contractor shall be provided at no increase in the cost to the Owner and with no lessening of the Contractor's responsibility for its performance.

16. "Exposed": The term "exposed" shall mean any item or surface, exterior or interior, which can be seen by a person outside the building, or seen by a person inside any usable space within the building during normal activity.

a. Mechanical and electrical rooms, air handling rooms, storage rooms and penthouses shall be considered to have exposed surfaces, as shall the mechanical and electrical construction within them.

b. The interiors of closets and alcoves shall be considered exposed surfaces, and shall be finished to match the finish of the adjoining room or space, unless another finish is shown.

c. The interiors of cabinets shall be considered exposed, but a finish different from that of the exterior may be permitted or required.

d. Spaces which are not normally occupied or used by occupants or building staff, such as, shafts, hoist ways, tunnels, ceiling plenums, attics, and crew spaces shall be considered "concealed" spaces, unless finishes are shown or specified for their surfaces

17. "At no additional cost": The term "at no additional cost" shall mean at no additional cost to the Owner, the Architect or Engineer, or Galveston County's authorized Representative.

18. "Testing Laboratory": An independent entity engaged to perform specific inspections or tests of the Work, either at the project site or elsewhere; and to report and interpret the results of those inspections or tests.

19. Where the word "similar" appears on the drawings, it shall be interpreted in its general sense and not as meaning identical and all details shall be worked out in relation to their location and connection with other parts of the Work.

a. Where on any drawings a portion of the Work is drawn out and the remainder is indicated in outline, the parts drawn out shall also apply to parts outlined.

2. Executions, Correlation, and Intent

A. By executing his Agreement, Contractor represents that he has visited the site, familiarized himself with the local conditions under which the Work is to be performed and correlated his observances with the requirements of the Contract Documents. Claims, as a result of failure to do so, will not be considered.

1. The Contract shall be signed in triplicate by the Owner and Contractor.

B. The intent of the Contract Documents is to include all items necessary for the proper execution and completion of the Work. The Contract Documents are complementary, and what is required by any one shall be as binding as if required by all. Work not covered in the Contract Documents will not be required unless it is consistent therewith and is reasonably inferable therefrom as being necessary to produce the intended results. Words and abbreviations in the Contract Documents which have well known technical or trade meanings are used in accordance with such recognized meanings

C. The organization of the Project Manual into divisions, sections and articles, and the arrangements of Drawings shall not control Galveston County's authorized Representative in dividing the Work among Contractors or in establishing the extent of Work to be performed by any trade

D. Written interpretations necessary for the proper execution or progress of the Work, in the form of drawings or otherwise, will be issued with reasonable promptness by the Architect or Engineer through Galveston County's authorized Representative and in accordance with any schedule agreed upon. The Contractor shall make written request through Galveston County's authorized Representative to the Architect or Engineer for such interpretations. Such interpretations shall be consistent with and reasonably inferable from the Contract Documents. The Contractor shall execute and complete the Work in accordance with such interpretations.

3. Ownership and Use of Documents

A. Unless otherwise provided in the Contract Documents, the Contractor will be furnished, free of charge, three (3) sets of Working Drawings and Project Manual reasonably necessary for the execution of the Work.

B. All Drawings, Project Manual and copies thereof furnished by the Architect or Engineer are and shall remain his property. They are to be used only with respect to this Project and are not to be used on any other project. With the exception of one contract set for each party, such documents are to be returned or suitably accounted for to the Architect or Engineer on request at the completion of the Work. Submission or distribution to meet official regulatory requirements or for other purposes in connection with the Project is not to be construed as publication in derogation of the Architect or Engineer's common law copyright or other reserved rights.

4. Owner

A. The Owner for this project is:

Galveston County
722 Moody, Suite 200
Galveston, Texas 77550

The Owner is the person or entity identified as such in the Agreement between the Owner and Contractor and is referred to throughout the Contract Documents as if singular in number and masculine in gender. The term "Owner" means the Owner or his authorized representative. B. Information and Services furnished by the Owner.

1. The Owner will furnish all surveys describing the physical characteristics, legal limitations and utility locations for the site of the Project, and a legal description of the site.
2. Except as provided in Article 9.2 of the Trade Contract the Owner will secure and pay for necessary approvals, easements, assessments and charges required for the construction, use, or occupancy of permanent structures or for permanent changes in existing facilities.
3. Information or services under the Owner's control will be furnished by the Owner with reasonable promptness to avoid delay in the orderly progress of the Work.
4. The Owner shall forward all instructions to the Contractors through Galveston County's authorized Representative.

5. Architect or Engineer

A. Definition

1. The Architect or Engineer for this project is: Shelmark Engineering

2. The Architect or Engineer is the person lawfully licensed to practice Architect or Engineering or an entity lawfully practicing Architect or Engineering identified as such in the Agreement between the Owner and Galveston County's authorized Representative and is referred to throughout the Contract Documents as if singular in number and masculine in gender. The term Architect or Engineer means the Architect or Engineer or his authorized representative.
3. Nothing contained in the Contract Documents shall create any contractual relationship between the Architect or Engineer and any Contractor.

B. Architect or Engineer Duties during Construction

1. The Architect or Engineer will be the interpreter of the requirements of the Drawings and Project Manual. The Architect or Engineer will, within a reasonable time, render such interpretations as are necessary for the proper execution of the progress of the work.
2. The Architect or Engineer shall interpret the requirements of Changes In The Work, and he shall decide all other questions of design intent in connection with the work.
3. The Architect or Engineer will recommend suspension of the Work whenever such suspension may be necessary to ensure proper execution of the Work.
4. All interpretations of the Architect or Engineer shall be consistent with the intent of and reasonably inferable from the Contract Documents and will be in writing or in the form of drawings. All requests for interpretations shall be directed through Galveston County's authorized Representative.
5. It shall be the responsibility of the Architect or Engineer to make interpretations and render opinions in regard to all claims of the Owner or Galveston County's authorized Representative involving questions of interpretation of the intent of the drawings and Project Manual.
6. Neither the Contractor, Galveston County's authorized Representative nor the Owner shall be bound by any determination, interpretation or opinion of the Architect or Engineer if it is later determined that such is not in accord with the true intent of the contract documents. The party taking issue with the determination, interpretation or decision of the Architect or Engineer shall give the other party or parties, as the case may be, written notice of such fact within ten (10) days after the determination, interpretation or opinion is rendered by the Architect or Engineer. However, it is the intent of this paragraph that in the actual performance of the Work, the Contractor and/or Galveston County's authorized Representative shall, in the first instance, proceed in accordance with the instruction given by the Architect or Engineer unless the Owner and Galveston County's authorized Representative mutually agree that the Contractor and/or Galveston County's authorized Representative shall proceed otherwise.
7. The Architect or Engineer's decision in matters relating to artistic effect will be final if consistent with the Contract Documents.
8. The Architect or Engineer will have authority to reject Work which does not conform to the Contract Documents. Whenever, in his opinion, he considers it necessary or advisable for the implementation of the Contract Documents, he will have authority to require special inspection or testing of the Work in accordance with Subparagraph 19.B whether or not such Work be then fabricated, installed or completed. However, neither the Architect or Engineer's authority to act under this Subparagraph nor any decision made by him in good faith either to exercise or not to exercise such authority, shall give rise to any duty or responsibility of the Architect or Engineer to the Contractor, any Sub-Contractor, any of their agents or employees, or any other person performing any of the Work.
9. The Architect or Engineer will be the judge of the performance of the Work and will use his powers under the contract to enforce its faithful performance. The Architect or Engineer will determine the amount, quality, acceptability and fitness of all parts of the work.
10. The Architect or Engineer will review or take other appropriate action upon Contractor's submittals such as Shop Drawings, Product Data and Samples, but only for conformance with the design concept of the Work and with the information given in the Contract Documents. Such action shall be taken with reasonable promptness so as to cause no delay. The Architect or Engineer's review of a specific item shall not indicate approval of an assembly of which the item is a component.
11. The Architect or Engineer along with Galveston County's authorized Representative will conduct site visits to determine the dates of Substantial Completion and final completion, will receive written warranties and related documents required by the Contract and assembled by the Contractor.
12. The Architect or Engineer will communicate with the Contractor through Galveston County's authorized Representative.

6. Galveston County's authorized Representative

A. Definition

1. Galveston County's authorized Representative or this project is: J. Dudley Anderson, County Architect
2. Galveston County's authorized Representative is the person or entity who has entered into an agreement with the Owner to serve as Galveston County's authorized Representative and is referred to throughout the Contract Documents as if singular in number and masculine in gender.
3. It is the intent of these General Conditions to allow Galveston County's authorized Representative to direct and schedule the performance of all Work and the Contractors are expected to follow all such directions and schedules.

B. Administration of the Contract

1. Galveston County's authorized Representative will provide, as the Owner's authorized representative, the general administration of the Project as described herein and in Article 10 of the Agreement between Galveston County and Contractor.
2. Galveston County's authorized Representative will be the Owner's Construction Representative during construction until final payment and shall have the responsibility to manage the work of all Contractors.
3. Galveston County's authorized Representative shall have the authority to reject Work, which does not conform to the Contract Documents, and to require any Special Inspection and Testing in accordance with Subparagraph 20.B.
4. Galveston County's authorized Representative will prepare and issue Amendments (Changes In The Work) to the Contractors in accordance with Article 27.
5. Galveston County's authorized Representative, along with the Architect or Engineer, will conduct site visits to determine the dates of Substantial Completion and Final Completion, and will receive and review written warranties and related documents required by the Contract and assembled by the Contractor.
6. Galveston County's authorized Representative may call for meetings of the Contractors, SubContractors, and material suppliers, as he deems necessary for the proper coordination of the work. Such meetings shall be held at the jobsite on regular working days during regular working hours. Unless otherwise directed by Galveston County's authorized Representative, attendance shall be mandatory for all parties notified.

7. **Contractor** A. Definition

1. Contractor is the person or entity identified as such, and is referred to throughout the Contract Documents as if singular in number and masculine in gender. The term Contractor means the Contractor or his authorized representative.
2. In the Project Manual, the word "contractor" shall mean and shall be interpreted as being the "Contractor" whose "scope of work" and Project Manual index includes that portion of the work. In these General Conditions the word "contractor" and/or "Contractor" shall mean and shall be interpreted as being "individually, each and every Contractor".
3. The Contractor shall at all times be considered to be an independent contractor, and will not hold itself or its employees out to be employees or agents of the County of Galveston.
4. The Contractor will retain full control over this contract and will not assign said contract without the prior written consent of the County.

B. Review of Contract Documents

1. The Contractor shall carefully study and compare the Contract Documents and shall at once report to Galveston County's authorized Representative any error, inconsistency or omission he may discover. If the Contractor performs any work without reporting any such error, inconsistency, or omission to Galveston County's authorized Representative or contrary to any laws, ordinances, rules, or regulations, and without such notice to Galveston County's authorized Representative, he shall assume full responsibility therefore and shall bear all costs attributable thereto.

C. Supervision and Construction Procedures

1. All work shall be performed and completed in a thorough, workmanlike manner and in accordance with the latest proven practices of the trade by thoroughly skilled and experienced workers.

2. The Contractor shall supervise and direct the Work, using his best skill and attention. He shall be solely responsible for all construction means, methods, techniques, sequences and procedures and for coordinating all portions of the Work under the Contract subject to the overall coordination of Galveston County's authorized Representative.
3. Galveston County's authorized Representative may reject any means, methods, techniques, sequences or procedures proposed by the Contractor, which might constitute or create a hazard to the Work, or to persons or property, or which will not provide Work in accordance with the Contract Documents
4. The Contractor shall be responsible to the Owner for the acts and omissions of his employees and all his Sub-Contractors and their agents and employees and other persons performing any of the Work under a contract with the Contractor.
5. Neither observations nor site visits, tests or approvals by persons other than the Contractor shall relieve the Contractor from his obligations to perform the Work in accordance with the Contract Documents. The Contractor shall do and be responsible for the correct laying out of the Work as per drawings and written instruction of Galveston County's authorized Representative including all necessary leveling and checking. The Contractor shall check the established grades and bench marks, and shall lay out all partition lines and other significant reference lines or points which will enable them to accurately place their boxes, openings, sleeves, conduits, pipe duct, controls, hangers, inserts and other devices. Subcontractors shall be responsible for laying out their Work from these reference points.

D. Labor and Materials

1. The Contractor is encouraged to use local labor, but not at the expense of poor workmanship and higher cost.
2. The Contractor and all Sub-Contractors shall not discriminate against any employee or applicant for employment because of race, color, sex, or national origin.
3. The Contractor shall post in conspicuous places, available to employees and applicants for employment, notices setting forth the policies of non-discrimination.
4. In the event of Contractor's non-compliance with the non-compliance clause of this Contract, the Contract entered into may be canceled in whole or part.
5. The Contractor shall at all times enforce strict discipline and good order among his employees and shall not employ on the Work any unfit person or anyone not skilled in the task assigned to him. Obnoxious behavior, possession, or consumption of alcoholic beverages or drugs on the premises is strictly prohibited. Violators shall be promptly discharged from the site.
6. The Contractor shall accept delivery, unload, store, protect, provide security, distribute and install any materials, systems and equipment furnished by others which are a part of the Work. The Contractor shall document receipt of such materials, systems and equipment on forms acceptable to Galveston County's authorized Representative.
7. Whenever the Contractor has knowledge that any actual or potential labor dispute is delaying or threatens to delay the timely performance of the work of this contract, the Contractor shall immediately give notice thereof to Galveston County's authorized Representative. The Contractor shall then confirm the notice, in writing, within 24 hours of the giving thereof and shall include all relevant information with respect thereto. No claims will be accepted for costs incurred as a result of jurisdictional or labor practices disputes.
8. The County is committed to maintaining an alcohol and drug free workplace. Possession, use or being under the influence of alcohol or controlled substances by the Contractor's employees while in

   the performance of this Contract is prohibited. Violation of this requirement shall constitute grounds for immediate termination of the Contract.

8. Warranty

A. The Contractor warrants to the Owner that all materials and equipment furnished under this Contract will be new unless otherwise specified, and that all Work will be of good quality, free from faults and defects and in conformance with the Contract Documents. All Work not so conforming to these requirements, including substitutions not properly approved and authorized, may be considered defective. If required by Galveston County's authorized Representative, the Contractor shall furnish satisfactory evidence as to the kind and quality of materials and equipment. This warranty is not limited by the provisions of Paragraph 28.B

B. The warranty of materials, equipment and workmanship defined in 8.A is separate from, independent of, and in addition to any other guarantees in this contract or any other warranties required by the Contract Documents.

C. The Contractor, prior to or at the time of substantial completion for the Work and during administrative closeout of the project, shall submit one copy of all specified warranties and guarantees to Galveston County's authorized Representative for review, approval and subsequent transmittal to the Architect or Engineer and Owner.

D. Warranties and guarantees, including those specified in excess of the general one year guarantee shall be complete for all specific materials, systems, sub-systems, equipment, appliances and products specified and required by the Contract Documents.

E. Warranties and guarantees shall clearly define what is to be guaranteed; the extent, terms, conditions, time and effective dates.

F. Copies of the same warranties and guarantees shall be included in the "Owner's Maintenance Manual" as specified herein.

G. Owner's Maintenance Manual: The Contractor, during the course of the work, shall maintain, coordinate and collect copies of warranties, guarantees, certificates, test results, installation drawings, manufacturer's maintenance and operations manuals, parts lists, and keying schedules and at the acceptance of the project, shall assemble this material into a manual and forward to Galveston County's authorized Representativefor incorporation in the Operations and Maintenance Manual for the project.. H. Warranties shall not commence to run until the Owner:

1. Accepts the work for beneficial occupancy, and
    a. is in possession of all the specified guarantee/ warranty documentation, and
    b. has received the specified training for the operation and maintenance of the system/equipment .

I. If prior to the acceptance of the Work the Owner occupies or uses any separate unit of the Work, the guarantee period shall, as to the unit so occupied or used, commence on the date of such occupancy or use, with the further provision that the Owner shall have first agreed in writing that the separate unit is complete to such a degree as to permit its use or occupancy and subject to subparagraph 8.H as applicable. No such separate unit shall be occupied or used by the Owner until such certificate has been given. Equipment and facilities, which have seasonal limitations on their operation, shall be guaranteed for one full year from the date of test and acceptance in writing by the Owner.

J. If within any guarantee period, repairs or changes are required in connection with the guaranteed Work, as the result of the use of materials, equipment or workmanship, which are defective, or inferior, or not in accordance with the terms of the Contract, the Contractor shall, promptly, within 48 hours after receipt of notice from Galveston County's authorized Representative or Owner and without expense to the Owner or Construction Manager, commence and continue to effect such repairs or changes and:

1. Place in satisfactory condition, in every particular, all of such guaranteed work and correct all defects therein.
2. Make good all changes to the structure, site, equipment, or contents thereof, which, in the opinion of the Architect or Engineer, and Galveston County's authorized Representative is the result of the use of materials, equipment or workmanship, which are inferior, defective, or not in accordance with the terms of the Contract.

K. Notifications by Owner or Galveston County's authorized Representative of defects shall stop the warranty time period. The guarantee or warranty period for that replaced or restored work shall be reinstated for the remaining time period, starting on the date of acceptance of the replaced or restored work.

L. In any case, where in fulfilling the requirements of the Contract or of any guarantee embraced in or required thereby, the Contractor disturbs any work guaranteed under another contract, he shall restore such work to a condition satisfactory to the Architect or Engineer, and Galveston County's authorized Representative and guarantee such restored work to the same extent as it was guaranteed under such other contract.

M. If the Contractor after notice fails to proceed within 48 hours to commence and continue to comply with the terms of the guarantee, the Owner or Galveston County's authorized Representative may have the defect corrected in which case the Contractor and his surety shall be liable for all expenses incurred.

N. All special guarantees or warranties applicable to definite parts of the Work that may be stipulated in the Project Manual or other papers forming a part of the Contract shall be subject to the terms of this Article during the first year of the life of such special guarantee.

O. Nothing contained in this Article shall be construed to establish a period of limitation with respect to any other obligation which the Contractor might have under the Contract Documents.

P. In the event the Work of the Contractor is to be modified by another Contractor, either before or after inspection, the first Contractor shall remain responsible in all respects under the warranty given in Article 8 and under any other warranties provided in the Company Documents or by law. However, the first Contractor shall not be responsible for any defects in material or workmanship introduced by the Contractor modifying its work. Both the first Contractor and the Contractor making the modifications shall each be responsible solely for the work done by each. The Contractor modifying the earlier work shall be responsible for any damage to or defect introduced into the Work which it is modifying.

9. Taxes

A. The Contractor shall pay all sales, consumer, use and other similar taxes for the Work or portions thereof provided by the Contractor which are legally required at the time Proposals or proposals are received, whether or not yet effective. Such taxes are included in the trade contract sum.

B. Any taxes which are the responsibility of the Contractor, but are not paid by the Contractor, and which are subsequently assessed against and paid by the Owner shall be deducted by the Owner as an offset from the unpaid Contract Sum and any other amounts due to the Contractor. If the amount of such unpaid taxes exceeds the total of the unpaid Contract Sum and other amounts due to the Contractor, the Contractor agrees to pay the amount of such excess to the Owner.

10. Superintendent and key Personnel

A. The Contractor shall employ a competent superintendent and necessary assistants who shall be in attendance at the Project site during the progress of the Work. The superintendent shall be satisfactory to Galveston County's authorized Representative, and shall not be changed except with the consent of

Galveston County's authorized Representative, unless the superintendent proves to be unsatisfactory to the Contractor or ceases to be in his employ. The superintendent shall represent the Contractor and all communications given to the superintendent shall be as binding as if given to the Contractor. Important communications shall be confirmed in writing. Other communications shall be so confirmed on written request in each case.

B. A duly authorized representative of the Contractor shall be available for emergency telephone communication from the Owner or Galveston County's authorized Representative on a 24-hour basis, seven days a week during the performance of the work.

C. The Contractor shall identify the key personnel he intends to assign to the project, to Galveston County's authorized Representative within 48 hours after the Contractor has been notified to proceed. The Owner, acting through Galveston County's authorized Representative, reserves the right to approve the Contractor's proposed personnel, and anyone not so approved shall be immediately replaced by someone acceptable. If, in the course of construction, Galveston County's authorized Representative feels that it would be in his best interest to request a change in the Contractor's personnel, he may do so; and the Contractor shall immediately assign an acceptable replacement at no additional cost.

11. Drawings and Project manual at the site

A. The Contractor shall maintain at the site for Galveston County's authorized Representative and Architect or

Engineer one copy of all Drawings, Project Manual, Addenda, Bulletins, Amendments, and other Modifications, in good order and marked currently to record all changes made during construction. Including any changes in locations, sizing and arrangement of the various components of the Work or any other variations from the Drawings or Shop Drawings. The Contractor shall mark each drawing as the Work shown thereon is completed in the field, revising any or adding lines, dimensions, elevations, depths, notes or any other information required to accurately record "As-Built" conditions. These drawings, marked to record all changes during construction, and approved Shop Drawings, Product Data and Samples shall be delivered to Galveston County's authorized Representative, for the Owner, upon completion of the Work.

B. In addition to maintaining and delivering to Galveston County's authorized Representative those record Drawings required by Subparagraph 11.A the Contractor shall also prepare and submit to Galveston County's authorized Representative, upon completion of the Work "As-Built" Reproducible Drawings if the Project Manual so requires.

12. Use of Site

A. The owner does not assume any responsibility for any materials, tools, or equipment stored on or about the site.

B. The Contractor shall confine operations at the site to areas designated by Galveston County's authorized Representative, permitted by law, ordinances, permits and by the Contract Documents, and shall not unreasonably encumber the site with any materials or equipment. The Contractor shall not use any of the existing Owner's facilities, such as, toilets, cafeteria, parking areas, power hookup, etc., except with the Galveston County's authorized Representative's written approval. The Contractor shall not, at any time, block or restrict access to the site.

C. The Contractor shall coordinate all of his operations with Galveston County's authorized Representative and obtain his approval before using any portion of the project site and the Contractor shall comply with the Galveston County's authorized Representative's Site Utilization Plan.

D. The roads, sidings and other transportation facilities at the site, where work under the Contract is being performed, are for the general use and convenience of the Owner. If Contractors are permitted to use them, they must conform to the regulations of the local authorities. If the work of a Contractor requires that such facilities be temporarily discontinued, after obtaining Galveston County's authorized Representative's approval, the work must be done expeditiously and he shall provide and maintain proper warnings and detour signs at all pedestrian and vehicular closures, intersections, and along detours, directing traffic around closed portions of roadways. He shall, at his own expense, wherever necessary or required, provide and maintain fences, temporary roadways, temporary cross signs, watchmen, warning lights and take such other precautions as may be necessary to protect life any way by his act or neglect. All barricades and obstructions shall be illuminated at night, and all lights shall be kept on from one half hour before sunset, until one-half-hour after sunrise.

E. On-site storage space for Contractor's field office trailer, sheds, materials, tools, equipment, and supplies must be coordinated with and approved by Galveston County's authorized Representative in advance. Contractor's materials, equipment, tools and supplies shall be moved at no cost if their location obstructs or impedes the work of others.

F. Galveston County's authorized Representative will provide site survey, selected baselines and benchmarks.

G. The Contractor shall not disturb existing monuments and markers at the site. Should monuments, markers, or both be disturbed by the Contractor, he shall bear the cost of a licensed surveyor engaged by Galveston County's authorized Representative for the purpose of relocating such monuments or markers.

H. Each Contractor shall lay out his work and shall be responsible for the accuracy of all lines, elevations and measurements, grading, utilities, and other work executed by him under his Trade Contract. He must exercise proper precaution to verify figures shown on drawings before laying out work and will be held responsible for any error resulting from his failure to exercise such precaution.

13. Communications

A. The Contractor shall forward all communications to the Owner and Architect or Engineer through Galveston County's authorized Representative.

B. The Contractor shall promptly return telephone calls or respond to any other form of communication initiated by Galveston County's authorized Representative. Failure to promptly do so shall be considered lack of performance on the part of the Contractor.

C. All written correspondence to Galveston County's authorized Representative shall be dated, and signed by the Contractor or his authorized representative.

D. Written notice shall be deemed to have been duly served if delivered in person to the individual or member of the firm or entity or to an officer of the corporation for whom it was intended, or if delivered at or sent by registered or certified mail to the last business address known to him who gives the notice.

14. Sub-Contractors A.

Definition

1. A Sub-Contractor is a person or entity who has a direct or indirect contract with a Contractor to perform any of the Work at the site. The term Sub- Contractor is referred to throughout the Contract Documents as if singular in number and masculine in gender and means a SubContractor or his authorized representative.
2. Nothing in the contract documents shall create any contractual relationship between the Owner, the Architect or Engineer or Galveston County's authorized Representative and any SubContractor of the Contractor.

B. Award of Sub-trade Contracts and other Contract for Portions of the Work

1. Unless otherwise required by the Contract Documents the Contractor shall furnish to Galveston County's authorized Representative in writing, for acceptance by the Owner and Galveston County's authorized Representative in writing, the names of the persons or entities (including those who are to furnish materials or equipment fabricated to a special design) proposed for each of the principal portions of the Work. The Contractor is encouraged to use Local vendors wherever possible. Galveston County's authorized Representative will promptly reply to the Contractor in writing if either the Owner or Galveston County's authorized Representative, after due investigation, has reasonable objection to any such proposed person or entity. Failure of the Owner or Galveston County's authorized Representative to reply shall constitute notice of no reasonable objection.
2. The Contractor shall not contract with any such proposed person or entity to whom the Owner or Galveston County's authorized Representative has made reasonable objection under the provision of Subparagraph 14.B.1. The Contractor shall not be required to contract with anyone to whom he has a reasonable objection.
3. If the Owner or Galveston County's authorized Representative refuses to accept any person or entity on a list submitted by the Contractor in response to the requirements of the Contract Documents, the Contractor shall submit an acceptable substitute; however, no increase in the Contract Sum shall be allowed for any such substitution.
4. The Contractor shall make no substitution for any Sub-Contractor, person or entity previously selected if the Owner or Galveston County's authorized Representative makes reasonable objection to such substitution.

C. Sub-trade Contractual Relations

1. By an appropriate written agreement, the Contractor shall require each Sub-Contractor to the extent of the work to be performed by the Sub-Contractor, to be bound to the Contractor by the terms of the Contract Documents, and to assume toward the Contractor all the obligations and responsibilities which the Contractor, by these documents, assumes toward the Owner, Galveston County's authorized Representative, or the Architect or Engineer. Said agreement shall preserve and protect the rights of the Owner, Galveston County's authorized Representative and the Architect or Engineer under the Contract Documents with respect to the work to be performed by the Sub-Contractor so that the subcontracting thereof will not prejudice such rights, and shall allow to the Sub-Contractor, unless specifically provided otherwise in the Contractor agreement, the benefit of all rights, remedies and redress against the Contractor that the Contractor, by these Documents, has against the Owner.
2. Where appropriate, the Contractor shall require each Sub- Contractor to enter into similar agreements with his Sub-Contractors. The Contractor shall make available to each proposed SubContractor, prior to the execution of the Sub-trade contract, copies of the Contract Documents to which the Sub- Contractor will be bound by this Paragraph 14.C.1 and shall identify to the SubContractor any terms and conditions of the proposed Sub-trade contract which may be at a variance with the Contract Documents. Each Sub-Contractor shall similarly make copies of such Documents available to his Sub-Contractors.

15. Separate Contractors

A. The Contractor shall afford Galveston County's authorized Representative and other Contractors reasonable opportunity for the introduction and storage of their materials and equipment and the execution of their work, and shall connect and coordinate his Work with others under the general direction of Galveston County's authorized Representative.

B. If any part of the Contractor's Work depends, for proper execution or results, upon the work of Galveston County's authorized Representative or any separate Contractor, the Contractor shall, prior to proceeding with the Work, promptly report to Galveston County's authorized Representative any apparent discrepancies of defects in such work that render it unsuitable for such proper execution and results. Failure of the Contractor so to report shall constitute an acceptance of the other Contractor's or Galveston County's authorized Representative's work as fit and proper to receive his Work, except as to latent defects which may subsequently become apparent in such work by others.

C. Copies of Drawings and Project Manual relating to these separate contracts will be available to the Contractor, upon request, for his information in carrying out the above provisions. The Contractor shall be held responsible for any damage or misfit resulting from his neglect to comply with the foregoing.

D. All Contractors on the project shall have equal rights on the premises for the performance of their work, but shall follow the sequence established by the progress schedule and/or instruction issued by Galveston County's authorized Representative.

E. If the Contractor notifies Galveston County's authorized Representative, in writing, that another contractor on this project is failing to coordinate his work with the Work of this contract, as directed, Galveston County's authorized Representative will promptly investigate the charge. If he finds it to be true, he will promptly issue such directions to the other contractor with respect thereto as the situation may require. Galveston County's authorized Representative or Owner shall not, however, be liable for any damages suffered by this Contractor by reason of the other contractor's failure to promptly comply with the directions so issued by Galveston County's authorized Representative or by reason of another contractor's default in performance; it being understood that Galveston County's authorized Representative does not guarantee the responsibility or continued efficiency of any contractor. Any costs caused by defective or illtimed work shall be borne by the party responsible therefore.

F. Should the Contractor wrongfully cause damage to the work or property of the Owner, any separate Contractor or other Contractor, the Contractor shall, upon due notice, promptly attempt to settle with the Owner, the separate Contractor or other Contractor by agreement, or otherwise resolve the dispute. If such separate Contractor or other Contractor sues the Owner on account of any damage alleged to have been caused by the Contractor, the Owner shall notify the Contractor who shall defend such proceedings at the Contractor's expense, and if any judgment or award against the Owner arises therefrom, the Contractor. shall pay or satisfy it and shall reimburse the Owner for all attorney's fees and court costs which the Owner has incurred.

G. Should the Contractor sustain any damage through any act or omission of any other contractor having a contract with the Owner for the performance of work upon the site or of work which may be necessary to be performed for the proper prosecution of the work to be performed hereunder, or through any act of omission of a subcontractor of such contractor, the Contractor shall have no claim against the Owner, Architect or Engineer, Galveston County's authorized Representative or the Owner's consultants for such damage, but shall have a right to recover such damage from the other contractor under the provision similar to the following provisions that have been or will be inserted in the contracts with such other contractors.

H. Should any other contractor having or who shall hereafter have a contract with the Owner for the performance of work upon the site sustain any damage through any act or omission of a Sub-Contractor of the Contractor, the Contractor agrees to reimburse such other contractor for all such damages and to indemnify and hold the Owner, Architect or Engineer and Galveston County's authorized Representative harmless from all claims.

I. The Contractor shall indemnify and hold the Owner, Architect or Engineer and Galveston County's authorized Representative harmless from any and all claims or judgments for damages and from costs and expenses to which the Owner and/or Galveston County's authorized Representative may be subjected or which either may suffer or incur by reason of the Contractor's failure to comply with the Galveston County's authorized Representative's directions promptly. If the Contractor installs any work prior to proper coordination, or in such manner as to cause interference with work of others, he shall arrange for removal of or arrange for necessary modifications to the work. Any such action is subject to the approval of Galveston County's authorized Representative and shall be at no additional cost.

J. The Contractor shall cooperate with the Owner, Architect or Engineer and Galveston County's authorized Representative and other Contractors working on this project in order to avoid interference, inconvenience or damage. To aid in avoiding conflicts, the Contractor, without additional charge, shall make all reasonable modifications in the work as may be directed by Galveston County's authorized Representative. In the event of the Contractor's operations causes any damage, interference, or inconvenience to work being carried out under any other Trade Contract, the Contractor shall restore, replace, rectify, or otherwise make good any damage to the satisfaction of Galveston County's authorized Representative or to the other Contractors. Should the responsible Contractor fail to comply with this provision, the work will be done by others at the expense of the responsible Contractor.

K. Contractor agrees that he has become familiar with the site, has reviewed the plans and Project Manual covering the work of his and other trades and thereby accepts responsibility for all necessary coordination of his Work with the work of other trades affected.

16. Governing Law and Venue

A. The Contract shall be governed by the law of the place where the Project is located. Any action arising from or relating from this Contract shall be instituted in a court of competent jurisdiction in Galveston County, Texas.

B. Contractor shall at all times observe and comply with all Federal, State and Local Laws, ordinances and regulations which in any manner effect the contract or the work.

C. Contractor shall comply with all city, county, and state codes, laws, and ordinances in force at the time of award of Contract and applicable to such work.

D. Contractor shall obtain, at Contractor's own expense such permits, certificates, and licenses as may be required in the performance of the specified work.

E. Contractor shall be responsible for obtaining and furnishing all necessary permits and licenses, City, County, State or Federal as are required for the performance of this Contract.

17. Claims for Damages

A. Should either party to the Trade Contract suffer injury or damage to person or property because of any act or omission of the other party or of any of his employees, agents or others for whose acts he is legally liable, claim shall be made, in writing, to such other party within a reasonable time after the first observance of such injury or damage.

B. Notwithstanding the event of any claim, dispute, or other matter in question arising out of or relating to this Agreement or the breach thereof, the Contractor shall carry on the work and maintain the Substantial Completion Date and Galveston County's authorized Representative shall continue to make payments in accordance with this Agreement.

C. All damage to the work from the action of the elements, or from any unforeseen circumstances in the prosecution of the work shall be repaired by the Contractor at his own costs.

18. Indemnification

A. The Contractor shall agree to assume all risks and responsibility for, and agrees to indemnify, defend, and save harmless, the County of Galveston, its elected and appointed officials and department heads, and its agents and employees from and against all claims, demands, suits, actions, recoveries, judgments, and costs and expenses including reasonable attorney's fees for the defense thereof in connection therewith on account of the loss of life, property or injury or damage to the person which shall arise from Contractor's operations under this Contract, its use of County facilities and/or equipment or from any other breach on the part of the Contractor, its employees, agents or any person(s) in or about the County's facilities with the expressed or implied consent of the County. Contractor shall pay any judgment with cost which may be obtained against Galveston County resulting from contractor's operations under this Contract.

B. Contractor agrees to indemnify and hold the County harmless from all claims of subcontractors, laborers incurred in the performance of this contract. Contractor shall furnish satisfactory evidence that all obligations of this nature herein above designated have been paid, discharged or waived. If Contractor fails to do so, then the County reserves the right to pay unpaid bills of which County has written notice direct and withhold from Contractor's unpaid compensation a sum of money reasonably sufficient to liquidate any and all such lawful claims.

C. To the fullest extent permitted by law the Contractor shall indemnify and hold harmless the Owner, Architect, Architect's consultants, and agents and employees of any of them from and against claims, damages, losses and expenses, including but not limited to attorneys' fees, arising out of or resulting from performance of the Work, provided that such claim, damage, loss or expense is attributable to bodily injury, sickness, disease or death, or to injury to or destruction of tangible property (other than the Work itself), but only to the extent caused by the negligent acts or omissions of the Contractor, a Subcontractor, anyone directly or indirectly employed by them or anyone for whose acts they may be liable, regardless of whether or not such claim, damage, loss or expense is caused in part by a party indemnified hereunder. Such obligation shall not be construed to negate, abridge, or reduce other rights or obligations of indemnity that would otherwise exist as to a party or person described in this Section.

D. In claims against any person or entity indemnified under this Section by an employee of the Contractor, a Subcontractor, anyone directly or indirectly employed by them or anyone for whose acts they may be liable, the indemnification obligation under this Section shall not be limited by a limitation on

amount or type of damages, compensation or benefits payable by or for the Contractor or a Subcontractor under workers' compensation acts, disability benefit acts or other employee benefit acts.

19. Rights and Remedies

A. The duties and obligations imposed by the Contract Documents and the rights and remedies available thereunder shall be in addition to and not a limitation of any duties, obligations, rights and remedies otherwise imposed or available by law.

B. No action or failure to act by the Owner, Construction Manager, Architect or Engineer or Contractor shall constitute a waiver of any right or duty afforded any of them under the Contract Documents, nor shall any such action or failure to act constitute an approval of or acquiescence in any breach thereunder, except as may be specifically agreed in writing.

20. Tests

A. If the Contract Documents, laws, ordinances, rules, regulations or order of any public authority having jurisdiction require any portion of the Work to be inspected, tested or approved, the Contractor shall give Galveston County's authorized Representative timely notice of its readiness so the Architect or Engineer and Galveston County's authorized Representative may observe such inspection, testing or approval. The Contractor shall bear all costs of such site visits, tests or approvals unless otherwise provided.

B. If the Architect or Engineer or Galveston County's authorized Representative or Owner determines that any Work requires special inspection, testing or approval which Subparagraph 19.A does not include, he will, through Galveston County's authorized Representative, instruct the Contractor to order such special inspection, testing or approval and the Contractor shall give notice as in Subparagraph 19.A. If such special inspection or testing reveals a failure of the work to comply with the requirements of the Contract Documents, the Contractor shall bear all costs thereof, including compensation for the Architect or Engineer's and Galveston County's authorized Representative's additional services made necessary by such failure. If the Work complies, the Owner shall bear such costs and an appropriate Amendment shall be issued.

C. Required certificates of inspection, testing or approval shall be secured by the Contractor and promptly delivered by him through Galveston County's authorized Representative to the Architect or Engineer.

D. If the Architect or Engineer or Galveston County's authorized Representative is to observe the site visits, tests or approvals required by the Contract Documents, he will do so promptly and, where practicable, at the source of supply.

E. Neither the observations of the Architect or Engineer or Galveston County's authorized Representative, in their Administration of the Construction Contract, nor site visits, test or approvals by persons other than the Contractor, shall relieve the Contractor from his obligation to perform the Work in accordance with the Contract Documents.

F. The Contractor shall deliver test samples of any of the materials specified in any of the Sections of his Specifications to an independent testing laboratory selected and approved by the Owner and Construction Manager, if so required. This may apply to materials proposed for use, materials already delivered to the job, or materials already incorporated into the construction.

G. The Contractor shall maintain a file of all test reports. At the completion of the project, these reports will be submitted as an Appendix to the Operations and Maintenance Manual described above.

H. Any materials, which fail to meet the requirements of these Specifications, shall not be used whether or not previously approved by the Architect or Engineer. If they have been delivered to the job, they shall be removed. If they have already been incorporated into the construction, Galveston County's authorized Representative or the Architect or Engineer may order them removed, or, at the discretion of the Owner, through Galveston County's authorized Representative they may be permitted to remain in place providing the Contractor agrees to a proper deduction from the contract sum.

I. The services of a testing and inspection engineer selected b y the Owner and Architect or Engineer shall be provided and paid for by the Owner for the tests required in the paragraph 20.F unless specifically stated otherwise or due to deficient work.

21. Interest

A. Payments due and unpaid under the Contract Documents shall bear interest in accordance with applicable law.

22. Time

A. Definitions

1. Unless otherwise provided, the Contract Time is the period of time allotted in the Contract Documents for the Substantial Completion of the Work as defined in Subparagraph (22.A.3) including authorized adjustments thereto.
2. The date of commencement of the Work shall be the date of the Notice to proceed.
3. The date of Substantial Completion of the Work, for each Contractor, or designated portion thereof is the Date certified by the Architect or Engineer when construction is sufficiently complete, in accordance with the Contract Documents, so the Owner can occupy or utilize the Work or designated portion for the use for which it is intended.
4. The term day as used in the Contract Documents shall mean calendar day unless otherwise specifically designated.

B. Progress and Completion

1. With the Galveston County's authorized Representative's approval, the Contractor shall suspend any work that may be subject to damage by climatic conditions. Under such conditions, the Contractor shall take measures to protect his work and to minimize the impact on progress of the work.

C. Delays and Extension of Time

1. If the Contractor is delayed at anytime in the progress of the Work by any act or neglect of the Owner, Construction Manager, or the Architect or Engineer, or by any employee of either, or by any separate contractor employed by the Owner, or by changes ordered in the Work, or by labor disputes, fire, unusual delay in transportation, adverse weather conditions not reasonably anticipatable, unavoidable casualties or any causes beyond the Contractor's control, and without his fault or negligence, or by any other cause which Galveston County's authorized Representative determines may justify the delay, then the Contract Time shall be extended by Contract Amendment for such reasonable time as Galveston County's authorized Representative may determine.
2. Any claim for extension of time shall be made in writing to Galveston County's authorized Representative not more than ten (10) days after the commencement of the delay; otherwise, it shall be waived. Any claim for extension of time shall state the cause of the delay and the number of days extension requested. If the cause of the delay is continuing, only one claim is necessary, but the Contractor shall report the termination of the cause for the delay within ten (10) days after such termination; otherwise, any claim for extension of time based upon that cause shall be waived.
3. In the event of a delay attributable in part to the Contractor and in part to causes or parties for which the Contractor is not responsible, then provided the Contractor has given proper and timely notice hereunder, the delay shall be equitably apportioned among the parties causing the delay and the Contractor shall remain liable for the portion not so excused.
4. If no agreement is made stating the dates upon which interpretations shall be furnished, then no claim for delay shall be allowed on account of failure to furnish such interpretations until fifteen days after written request is made for them, and not then unless such claim is reasonable.
5. No claim for an increase in the Contract Sum for either acceleration or delay will be allowed for extensions of time pursuant to this Paragraph 22.C or for other changes in the Construction Schedules.
6. There are no Liquidated damages for this project.
7. The permitting of the Contractor or the surety on the performance bond to proceed to complete any work or any part of it after the date of completion or after the date to which the time for completion may have been extended, shall in no way operate as a waiver on the part of the Owner of any of its rights hereunder.
8. Neither the Owner nor the Architect or Engineer nor Galveston County's authorized Representative shall have liability to the Contractor or to any other Contractor or Sub-Contractor for delay, hindrance, or interference in the performance of the Work, however caused, except for delay or hindrance resulting from active interference of Owner or its representatives in such Contractor's execution of the Work, and except for delay or hindrance resulting from defective plans and specifications not reasonably discoverable by the Contractor prior to Contract award.
9. The Contractor shall be liable to the Owner for any other damages sustained as the result of the Contractor's refusal or failure to perform the Work, provided, however, that such refusal or failure is not the result of a justifiable delay as defined in Subparagraph 22.C.1.

23. Payments and Completion A. Progress Payments

1. Contractor shall make application to Owner by submittal of Pay Request to Galveston County's authorized Representative for payment utilizing forms provided by Owner for that purpose. Contractor shall state the percentage or the limits of the work performed and request payment for the amount of acceptable work performed. Applications for payment shall be made monthly by Contractor on a regular date set by Galveston County's authorized Representative.
2. Upon approval of the request for payment by Galveston County's authorized Representative and Architect or Engineer the Owner shall then pay the Contractor on or before 30 days thereafter, the total amount of the request, less 5% of the amount thereof, which 5% shall be retained until final payments, and further less all previous payments, and further less all further sums that may be retained by the County under the terms of this agreement
3. Upon the attainment of substantial completion, payment will be made so that the sum of all payments made under the contact equals Ninety Five Percent (95%) of the total contract amount
4. Galveston County's authorized Representative may request As-Built Drawings, schedule updates, payrolls for all labor, and other data supporting payment to subcontractors and/or materials suppliers before processing the requisition..
5. Except in case of bona fide disputes, or where the Contractor has some other justifiable reason for delay, the Contractor shall pay for all transportation and utility services not later than the end of the calendar month following that in which services are rendered and for all materials, tools and other expendable equipment to the extent of ninety five percent (95) of the cost thereof not later than the end of the calendar month following that in which such materials, tools and equipment are delivered at the site of the Project and in compliance with Texas Law. The Contractor shall pay to each of his Sub-Contractors, not later than the end of the calendar month in which each payment is made to the Contractor, the representative amount allowed the Contractor on account of the work performed by his trade subcontractors, to the extent of each Sub-Contractor's interest therein and in compliance with Texas Law. The Contractor shall, by an appropriate agreement with each Sub-Contractor, also require each Sub-Contractor to make payments to his suppliers and Sub-Contractors in a similar manner.
6. Materials, equipment and associated components that are in compliance with the approved submittals and will be incorporated into the structure, may be taken into consideration in computing progress payments, provided the material is delivered on the project site, or is delivered to the Contractor and the material is properly stored in a warehouse, storage yard or similar suitable place as may be approved by Galveston County's authorized Representative. The Contractor shall remain responsible for all such stored materials.
   a. Payment for materials, equipment and associated components stored on-site shall be 100% of a valid invoice less 5% retainage, indicating the unit quantity, description of the material or equipment and cost.
   b. Payment for materials, equipment and associated components stored off-site shall be 100% percent of a valid invoice, less 5% retainage, indicating the unit quantity, description of the material or equipment and costs. Before such payment is made, the Contractor shall furnish Galveston County's authorized Representative with a certified statement giving the exact location of the materials or equipment, that such material or equipment is properly stored and protected, and that it will not be diverted for use or installation at a different project. The Contractor shall furnish Galveston County's authorized Representative properly executed bills of sale and a certificate of insurance coverage for the material upon which payment is being made.
7. All material and work covered by payments made shall thereupon become the sole property of the Owner but Contractor shall remain responsible to protect same.

B. Payments withheld

1. Galveston County's authorized Representative may decline to approve an Application for Payment if in his opinion the application is not adequately supported. If the Contractor and Galveston County's authorized Representative cannot agree on a revised amount, Galveston County's authorized Representative shall process the Application for the amount he deems appropriate. Galveston County's authorized Representative may also decline to approve any Applications for Payment or, because of subsequently discovered evidence or subsequent site

visits, he may nullify in whole or in part any approval previously made to such extent as may be necessary in his opinion because of:

a. defective work not remedied;
b. third party claims filed or reasonable evidence indicating probable filing of such claims;
c. failure of the Contractor to make payments properly to Sub-Contractors or for labor, materials or equipment;
d. reasonable evidence that the Work cannot be completed for the unpaid balance of the Contract Sum;
e. damage to the Owner, or another contractor working at the Project;
f. reasonable evidence that the Work will not be completed within the Contract Time; or
g. persistent failure to carry out the Work in accordance with the Contract Documents.
h. no payment shall be made to the Contractor until certificates of insurance or other evidence of compliance by the Contractor with all the requirements of Article 30 have been filed with the Owner and Galveston County's authorized Representative. Further, no payments on the basis of work performed by a Sub-Contractor shall be paid until copies of all bonds required and any certificates of insurance required of the SubContractors under Article 30 have been filed with the Owner and Construction Manager.
i. the filing of a claim against the Project, which claim, is caused by the act or inaction of the Contractor or his Sub-Contractors;
j. refusal to follow the Project Safety Program issued as a contract document or Contractors Safety Program;
k. failure to maintain record drawings as specified;
l. failure to comply with HUB requirements;
m. failure to comply with EEO Requirements;
n. failure to properly submit a response to an RFP (Request for Proposal) within thirty (30) days of receipt thereof.

2. When the above grounds in subparagraph 22.B.1 are removed, payment shall be made for amounts withheld because of them.

C. Failure of Payment

1. If the Contractor is not paid and is approved for payment by Galveston County's authorized Representative and has become due and payable, then the Contractor may, upon seven additional days written notice to the Owner and Construction Manager, stop the Work until payment of the amount due has been received. The Contract Sum shall be increased by the amount of the Contractor's reasonable costs of shutdown, delay and startup, which shall be effected by appropriate Contract Amendment in accordance with Paragraph 27.C.

D. Substantial Completion

1. On or about the end of the project, the Contractor shall perform the following in order to achieve Substantial Completion.

a. When in the opinion of the Contractor the work is substantially complete,.
b. The Contractor shall notify Galveston County's authorized Representative, in writing, that the work will be ready for review and test on a definite date.
c. Notice shall be given at least fifteen (15) days in advance of said date.
d. Galveston County's authorized Representative shall forward the notice to the Architect or Engineer and will attach his endorsement as to whether or not he concurs with the Contractor's statement that the work will be ready for review or test on the date given, but such endorsement shall not relieve the Contractor of his responsibility in the matter.
e. If the Architect or Engineer concurs that the Work will be ready for review or test on the date given, the Architect or Engineer and Galveston County's authorized Representative will make such review after Contractor submits a thorough list of items to be completed or corrected (Punch List).
f. The Contractor is required to furnish access for the substantial Completion review.
g. Contractor shall have all systems fully functional and operational for the review.
h. The Architect or Engineer/Engineer and Galveston County's authorized Representative will inspect the project utilizing the Contractor's prepared Punch List, noting completed or incomplete items, and prepare a supplemental list of items that have been omitted or

incomplete items that were not previously noted. The Architect or Engineer, at his discretion, may attend and assist in the preparation of the Contractor's punch list.

i. Contractor completes corrections, and Architect or Engineer and Galveston County's authorized Representative re-inspect to establish Date of Substantial Completion. **Note:** Any items remaining on date of Substantial Completion are appended to Certificate (AIA G-704).

j. Architect or Engineer may issue a Certificate of Substantial Completion at this point.

k. Certain warranties and insurances are dependent on the date of Substantial Completion from the above certification. No other date of Substantial Completion will be recognized by the Owner or Contractor.

l. After the Certificate of Substantial Completion has been executed by all parties, it is returned to Galveston County's authorized Representative. Items on the appended Punch List are to be completed or corrected within the time limits established in the Certificate of Substantial Completion.

2. The project may be considered substantially complete if the work has been completed to the point where the work can be utilized for the general purpose for which it was undertaken and has been certified by the Architect or Engineer.

3. Progress payment request may not be submitted for more than 95% of the overall contract value at Substantial Completion.

E. Final Completion and Payment

1. Contractor shall be responsible for and make good without extra charge any defects due to faults in labor or material on all parts of the Contract for one year (and longer where noted) after Substantial Completion of the Work as defined in Article 22 in the General Conditions.

2. Property not in the Contract but damaged due to defects, shall be repaired or replaced by the Contractor without extra charge.

3. When notified by the Owner or Architect or Engineer that a defect exists and there is a doubt that the defect might be normal maintenance or a result of lack of normal maintenance, the Owner will send a representative with the Contractor’s representative to determine responsibility. Owner will not pay for such service calls if the defect is judged to be normal maintenance or a result of a lack of normal maintenance.

4. Neither the Final Certificate of Payment or payment of same, nor provision in the Contract Documents shall relieve the Contractor of the responsibility for negligence or faulty materials or workmanship within the extent and period provided by law and upon written notice, he shall remedy any defects due thereto and pay all expenses for any damage to other Work resulting there from. This guarantee of Work shall not relieve the Contractor of obligations of any Work not according to Plans and Specifications regardless of time of discovery.

5. No final payment will be considered until all deficiencies listed with the Certificate of Substantial Completion have been remedied.

6. Contractor submits written notice to Galveston County's authorized Representative that work is ready for final review and acceptance, and shall specifically note each item on the Punch List as being complete or the status of any incomplete item.

7. Notice shall be given at least fifteen (15) days in advance of said date.

8. Galveston County's authorized Representative shall forward the notice to the Architect or Engineer and will attach his endorsement as to whether or not he concurs with the Contractor's statement that the work will be ready for final review or test on the date given, but such endorsement shall not relieve the Contractor of his responsibility in the matter.

9. If the Architect or Engineer concurs that the Work will be ready for final review or test on the date given, the Architect or Engineer and Galveston County's authorized Representative will make such review with the Contractor and Owner.

10. The Contractor is required to furnish access for the final review.

11. Neither application for final payment nor for the remaining retained percentage shall be made until the Contractor submits to Galveston County's authorized Representative the following:

a. an affidavit that all payrolls, bills for materials and equipment, and other indebtedness connected with the Work for which the Owner or his property might in any way be responsible, have been paid or otherwise satisfied,

b. consent of surety, if any, to final payment,

c. properly executed " General Release and Claim Waiver and General Guarantee" on forms acceptable to Galveston County's authorized Representative,

d. specified warranties and guarantees,

e. other data establishing payment or satisfaction of all such obligations, such as receipts, releases and waivers of bond claims arising out of the Contract, to the extent and in such form as may be designated by the Owner. If any Sub-Contractor refuses to furnish a release or waiver required by the Owner the Contractor may furnish a bond satisfactory to the Owner to indemnify them against any such claim. If any such claim remains unsatisfied after all payments are made, the Contractor shall refund to the Owner or Galveston County's authorized Representative all moneys that the latter may be compelled to pay in discharging such claim, including all costs and reasonable attorneys' fees.

12. Contractor submits Final Application for Payment and a Certificate of Compliance, which indicates the following:

a. All Permit Numbers

b. Utility Release Dates

c. The building has been duly inspected and found to comply with all code requirements and ordinances.

d. A Certificate of Occupancy has been issued.

e. Architect and Engineer (with Owner's authorized Representative) make final inspection

f. Contractor submits additional final items:

g. Consent of Surety to Final Payment (AIA G-707)

h. Contractor's Affidavit of Payment of Debts and Claims (AIA G-706)

i. Contractor's Affidavit of Release of Liens (AIA G-706A with contractors, subcontractors and suppliers separate releases)

j. Contractor's Guarantee

k. Subcontractors' Guarantees.

l. Maintenance and Instruction Manuals. All manuals will contain an index listing the information submitted. The index sections will be divided and identified by tabbing each section as listed in the index.

m. Record Drawings (reproducible sepias)

n. Final List of Subcontractors (AIA G-805)

o. Affidavits from Contractor, Subcontractors, and suppliers stating that no asbestos products have been installed in this project.

p. Furnish written warranties to the Owner including specific items in each product warranty stipulated for individual sections.

q. Documents identified as "affidavit" must be notarized.

r. Contractor has documented the turnover of spare stock of materials, spare parts accessories and special tools to the Owner through Galveston County's authorized Representative, s.

Final Cleaning:

a. The work area shall be thoroughly cleaned inside and outside. Cleaning includes removal of smudges, marks, stains, fingerprints, soil, dirt, spots, dust, lint, and other foreign materials from finished and exposed surfaces. b. Remove all temporary facilities.

13. If the Work is found acceptable under the Contract Documents and the Contract fully performed, and Galveston County's authorized Representative, upon receipt of a correct final Application for Payment, recommends to the Owner that such payment be made.

14. The making of final payment shall constitute a waiver of all claims by the Owner or Galveston County's authorized Representative except those arising from:

a. unsettled claims;

b. faulty or defective Work appearing after Substantial Completion;

c. failure of the Work to comply with the requirements of the Contract Documents; or

d. terms of any special warranties required by the Contract Documents.

15. The acceptance by the Contractor of the final payment shall be, and operate as, a release to the Owner and to Galveston County's authorized Representative of all claims and of all liability to the Contractor for all things done or furnished in connection with this Trade Contract..

16. Final Payment to Contractor **does not include** payment of **retainage**. Payment of **retainage will be made after project completion and in accordance** with Article 3 of Agreement between Galveston County and Contractor.

24. Protection of Persons and Property A.

Safety Precautions and Programs

1. The Contractor expressly undertakes, both directly and through his Sub-Contractors to take every precaution at all times for the protection of persons, including employees and property. The Contractor shall be responsible for initiating, maintaining and supervising all safety precautions and programs in connection with the Work.
2. If the Contractor fails to maintain the safety precautions required by law or directed by Galveston County's authorized Representative, Galveston County's authorized Representative may take such steps as necessary and charge the Contractor therefore.
3. The failure of Galveston County's authorized Representative to take any such action shall not relieve the Contractor of his obligations in Subparagraph 24.A.1.

B. Safety of Persons and Property

1. The Contractor shall submit his safety program to Galveston County's authorized Representative prior to mobilizing to the job, and shall be responsible for the safety, efficiency and adequacy of his plant, appliances and methods and for any damage, which might result from failure or improper construction, maintenance, or operation. The Contractor shall provide a safety report to Galveston County's authorized Representative on a weekly basis.
2. The Contractor shall take all reasonable precautions for the safety of, and shall provide all reasonable protection to prevent damage, injury or loss to:
   a. all employees on the work and all other persons who may be affected thereby;
   b. all the Work and all materials and equipment to be incorporated therein, whether in storage on or off the site, under the care, custody or control of the Contractor or any of his Sub-Contractors;
   c. other property at the site or adjacent thereto, including trees, shrubs, lawns, walks, pavements, roadways, structures and utilities not designated for removal, relocation o r replacement in the course o f construction.
3. Contractor shall not permit any construction technique or activity, which decreases building security or safety. Contractors shall cooperate fully with the Galveston County's authorized Representative's and Owner's requirements regarding security and safety of the building.
4. The Contractor shall give all notices and comply with all applicable laws, ordinances, rules, regulations and lawful orders of any public authority bearing on the safety of persons or property or their protection from damage, injury or loss.
5. The Contractor shall provide, erect, maintain, dismantle and remove, as required by existing conditions and progress of the Work, all reasonable safeguards for safety and protection, including posting danger signs and other warnings against hazards, promulgating safety regulations and notifying the Owners and users of adjacent utilities to the work. He shall protect the Owner's property from injury or loss arising in connection with this Contract. He shall adequately protect adjacent property as provided by law and the Contract Documents. He shall provide and maintain all passageways, guard fences, light and other facilities for protection required by public authority, local conditions, or any of the Contract Documents. At no time remove, alter or render ineffective any barricades, railings or cover on the project without written permission of Galveston County's authorized Representative. Where these safety devices are to be turned over to others, upon completion of the work, the devices shall be repaired or replaced so that they meet the required standards prior to turnover.
6. When the use or storage of explosives or other hazardous materials or equipment is necessary for the execution of the Work, the Contractor shall exercise the utmost care and shall carry on such activities under the supervision of properly qualified personnel. Fuel for cutting and burning torches shall be stored in locations and protected as directed by Galveston County's authorized Representative. No volatile liquids shall be used for cleaning agents or as fuels for motorized equipment or tools within a building except with the express approval of Galveston County's authorized Representative. Bulk storage of volatile liquids shall be outside the building at locations directed by Galveston County's authorized Representative and only so much volatile liquid shall be allowed within the building at any given time.

7. The Contractor shall promptly remedy all damage or loss (other than damage or loss insured under Paragraph 26.B to any property referred to in Clauses 24.B.2.b and 24.B.2.c caused in whole or in part by the Contractor, his Sub-Contractors, or anyone directly or indirectly employed by any of them, or by anyone for whose acts any of them may be liable and for which the Contractor is responsible under Clauses 24.B.2.b and 24.B.2.c except damage or loss attributable to the acts or omissions of the Owner or Architect or Engineer or anyone directly or indirectly employed by either of them or by anyone for whose acts either of them may be liable, and not attributable to the fault or negligence of the Contractor are in addition to his obligations under Article 5 in the Trade Contract.
8. The Contractor shall take all precautions required to prevent fires as a result of his operations. Where flame cutting torches, blow torches, or welding tools are required to be used within an existing building, their use shall be as approved by Galveston County's authorized Representative at the site. When welding tools or torches of any type are in use, the Contractor shall have available, in the immediate vicinity of the work, a fire extinguisher of the CO2 type. The fire extinguisher shall be provided and maintained by the Contractor.
9. The Contractor shall advise Galveston County's authorized Representative, in writing, of all unusual flammable or toxic materials which the Contractor plans to store and use on site.
10. Shielding or similar precautions will be taken adjacent to welding operations
11. The Contractor shall designate a responsible member of his organization at the site whose duty shall be the prevention of accidents. This person shall be the Contractor's superintendent unless otherwise designated by the Contractor in writing to Galveston County's authorized Representative, and shall attend all project safety meetings scheduled by Galveston County's authorized Representative.
12. Every employee will be dressed for the work he performs. Minimum dress will consist of long pants, tee shirt, hardhat, safety glasses and work shoes. Shorts, cut-offs, "tank-top" shirts or soft-toed shoes will not be permitted.
13. Each Contractor shall, in a readily visible manner, identify all of his tools, equipment and similar materials, either by paint color or label. The Contractor shall provide his employees with a hard hat bearing his first initial, last name, and his Company name. This information shall be clearly visible at all times.
14. The Contractor shall not load or permit any part of the Work to be loaded so as to endanger its safety.
15. Weather protection shall be supplied by the Contractor and shall include any enclosure, supplemental heating, and furnishing and *any* other features (insulation, etc.) for meeting conditions required by Galveston County's authorized Representative or by the Project Manual relative to the Contractor's work.

25. Emergencies

A. In an emergency affecting the safety or life of individuals, or of the Work, or of adjoining property, the Contractor, without special instruction or authorization from the Owner or Galveston County's authorized Representative or Architect or Engineer, shall act, at his discretion, to prevent such threatened loss or injury. Also, should he, to prevent threatened loss or injury, be instructed or authorized to act by the Owner or Galveston County's authorized Representative or Architect or Engineer he shall so act, without appeal. Any additional compensation or extension of time claimed by the Contractor on account of any emergency work shall be determined as provided by Article 27 - Changes in Work.

26. Insurance

A. Contractor shall purchase from and maintain in a company lawfully authorized to do business in the State of Texas and which carry a Best's rating of A-VII o9r higher such insurance as will protect the Contractor from claims set forth below which may arise out of or result from the Contractor's operations under this Agreement and for which the Contractor may be legally liable.

1. claims under workers compensation, disability benefit and other similar employee benefit acts which are applicable to the operations to be performed:
2. claims for damages because of bodily injury, occupational sickness or disease, or death of the Contractor's employees or ;
3. claims for damages because of bodily injury, sickness or disease, or death of any person other than the Contractor's employees;

4. claims for damages insured by usual personal injury liability coverage which are sustained (1) by a person as a result of an offense directly or indirectly related to employment of such person by the Contractor, or (2) by any other person;
5. claims for damages, other than to the Work itself, because of injury to or destruction of tangible property, including loss of use resulting therefrom;
6. claims for damages because of bodily injury, death or property damage arising out of ownership, maintenance or use of a motor vehicle;
7. claims involving contractual liability insurance applicable to the Contractor's obligations under

B. Contractors Liability Insurance

1. Contractor shall keep in full force and effect, a policy of public liability and property damage insurance issued by a casualty company authorized to do business in the State of Texas, and in standard form approved by the Board of Insurance Commissioners' of the State of Texas, with coverage provision insuring the public from any loss or damage that may arise to any person or property by reason of services rendered by successful Proposer and providing that the amount by reason of services limits of not less than the following sums:
   a. Workmen's Compensation
      1) State Statutory limits
   b. Comprehensive General Liability (including Premises – Operations; Independent Contractor's Protective; Products and Completed Operations; Broad Form Property Damage
      1) Bodily Injury
         i. $100,000.00 each person, each occurrence
         ii. $300,000.00 Aggregate, each occurrence
   c. Property Damage including loss of use
      1) $100,000.00 Each occurrence
   d. Products and Completed Operations to be maintained for one (1) year after Final Payment
   e. Property Damage Liability Insurance will provide X, C or U coverage as applicable

C. Contractual Liability

1. Bodily Injury
   a. $100,000.00 Each Person
   b. $300,000.00 Each occurrence
2. Property Damage
   a. $100,000.00 Each occurrence

D. Personal injury, with Employment Exclusion deleted:

a. $100,000.00 Each occurrence

E. Comprehensive Automobile Liability (including owned, non-owned and hired motor vehicles):

1. Bodily Injury
   a. $100,000.00 Each Person
   b. $300,000.00 Each occurrence
2. Property Damage
   a. $100,000.00 Each occurrence F. Umbrella Liability Coverage:

1. $1,000,000.00 to provide excess liability coverages required above. G. Professional Liability Coverage:
2. $1,000,000.00 to Abatement and Associated work or minimum State law.

H. Galveston County, Construction Manager, and Architect or Engineer shall be named as "additional insured" on such policies as are specified above and shall be notified of any changes to the policy during the contractual period.

I. The above requirements do not establish limits of Contractor's liability.

J. Such insurance is to be provided at the sole cost of Contractor.

K. All policies of insurance shall waive all rights of subrogation against Galveston County, its officers, employees and agents.

L. Galveston County reserves the right to require additional insurance should it be deemed necessary.

M. This insurance required by Subparagraph 26.B-G shall be written for not less than limits of liability listed or required by law, whichever is greater.

N. The insurance required by Subparagraph 26.B-G shall include premises operations (including explosion, collapse and underground coverage), elevators, independent contractors, products and/or completed operations, and contractual liability insurance (on a "blanket basis" designating all written contracts), all including broad form property damage coverage. Liability insurance may be arranged under Commercial General Liability policies for the full limits required or by a combination of underlying policies for lesser limits with the remaining limits provided by an Excess or Umbrella Liability Policy.

O. The insurance required by Subparagraph 26.B-G shall include contractual liability insurance applicable to the Contractor's obligations under Article 5 in the Trade Contract

P. Property Insurance

1. Unless otherwise provided, the Owner will purchase and maintain property insurance upon the entire Work at the site to the full insurable value thereof. This insurance shall include the interests of the Owner, Galveston County's authorized Representative, the Contractors and SubContractor in the Work and shall insure against the perils of fire and extended coverage, and shall include "all risk" insurance for physical loss or damage. This coverage carries a deductible per occurrence, which will be paid by the Contractor or Sub-Contractor responsible for each loss. This insurance coverage does not cover the Contractor's or Sub-Contractor's tools and equipment.
2. The Owner will effect and maintain such boiler and machinery insurance as may be necessary and/or required by law. This insurance shall include the interest of the Owner, Galveston County's authorized Representative, the Contractors, and Sub-Contractors in the Work.
3. Any loss insured under Paragraph 26.B-G is to be adjusted with the Owner and made payable to the Owner as trustees for the insured's, as their interests may appear, subject to the requirements of any applicable mortgage clause.
4. The Owner, Galveston County's authorized Representative, the Architect or Engineer, the Contractors, and the Sub-Contractors waive all rights against each other and any other contractor or subcontractor engaged in the Project for damages caused by fire or other perils to the extent covered by insurance provided under Paragraph 30.2, or any other property or consequential loss insurance applicable to the project, equipment used in the Project, or adjacent structures, except such rights as they may have to the proceeds of such insurance. If any policy of insurance requires an endorsement to maintain coverage with such waivers, the owner of such policy will cause the policy to be so endorsed. The Owner will require, by appropriate agreement, written where legally required for validity, similar waivers in favor of the Contractors and SubContractors by any separate contractor and his subcontractors.
5. The Owner shall deposit in a separate account any money received as trustees, and shall distribute it in accordance with such agreement as the parties in interest may reach.
6. The Owner as trustees shall have power to adjust and settle any loss with the insurers.
7. If the Owner finds it necessary to occupy or use a portion or portions of the Work prior to Substantial Completion thereof, such occupancy shall not commence prior to a time mutually agreed to by the Owner and Galveston County's authorized Representative and to which the insurance company or companies providing the property insurance have consented by endorsements to the policy or policies. This insurance shall not be cancelled or lapsed on account of such partial occupancy.

27. Changes in the Work

A. Change Authorization/Contract Amendments

1. Changes in the Work may be accomplished after execution of the contract, and without invalidating the Contract, by Change Order, or order for a minor change in the work, subject to

the limitations stated in this Article 27 and elsewhere in the contract Documents. A Change Authorization is a written order to the Contractor signed by Owner, in the form of an Agreement Amendment issued after the execution of the Contract, authorizing a Change in the Work or an adjustment in the Contract Sum and/or the Contract Time. The Contract Sum and the Contract Time may be changed only by Written Amendment. An Amendment signed by the Contractor indicates his agreement therewith, including the adjustment in the Contract Sum and/or the Contract Time. Contractor agrees that the dollar amount and time extensions, as applicable, in each Change Order constitutes full compensation to the Contractor for all costs, expenses and damages to the Contractor, whether direct, consequential or otherwise, in anyway incidental to or arising out of, or resulting, directly or indirectly from the work performed or modified by the Contractor. Amendments not formally rejected within ten (10) days after receipt shall be deemed accepted.

2. If unit prices are stated in the Contract Documents or subsequently agreed upon, and if the quantities originally contemplated are so changed in a proposed Change In The Work that application of the agreed unit prices to the quantities of work proposed will cause substantial inequity to the Owner or the Contractor, the applicable unit prices shall be equitably adjusted.

B. Concealed Conditions

1. Should concealed conditions be encountered in the performance of the Work below the surface of the ground or should concealed or unknown conditions in an existing structure be at variance with the conditions indicated by the Contract Documents, or should unknown physical conditions in an existing structure of an unusual nature, differing materially from those ordinarily encountered and generally recognized as inherent in work of the character provided for in this Contract, be encountered, the Contractor must report the conditions to Galveston County's authorized Representative before the conditions are disturbed. Galveston County's authorized Representative shall thereupon notify the Architect or Engineer.

a. Upon such notices, or upon his own observation of such conditions, the Architect or Engineer shall promptly make such changes in the Drawings and Project Manual as he finds necessary to conform to the different conditions. Any change in the cost of the work or the time needed for completion resulting from concealed conditions shall be determined in accordance with Article 8 in the Trade Contract provided a notice there of is made within ten (10) days after the first observance of the conditions.

C. Claims for Additional Cost

1. A change in the work may be initiated in one of two ways:

a. A "Request for Proposal" Form (RFP) from Galveston County's authorized Representative to the Contractor describing the revision to the work desired. Usually, it is accompanied by revised drawings, sketches or other data.

b. Formal notification from the Contractor documenting a "concealed condition" requesting investigation by Galveston County's authorized Representative and Architect or Engineer which causes changes in the Drawings and Project Manual (and a subsequent Request for Proposal on the revised documents).

2. If the Contractor claims that any instructions given to him by Galveston County's authorized Representative, by drawings or otherwise, involve extra work not covered by the Contract, he shall give Galveston County's authorized Representative written notice of the additional cost within ten (10) days after the receipt of such instructions and before proceeding to execute the work, except in emergencies endangering life or property, in which case the Contractor shall proceed in accordance with Article 27. Should it not be clear to the Contractor that a change will involve extra work, written notice given within five (5) days that the change may involve extra work will be considered sufficient notice. If it is later determined that the work involved in such instruction shall be recognized as an extra, the amounts of additional compensation to be paid therefore, should be determined in accordance with Article 8 in the Trade Contract. Failure to respond as noted shall waive the Contractor's claim for additional compensation.

3. Timely submittal (Return) of Requests for Proposal is mandatory. RFP's shall be answered and returned within ten (10) days of receipt. Failing to return RFP's within thirty (30) days may constitute basis for withholding progress payments.

4. Galveston County's authorized Representative will inform the Contractors, and the Contractor will inform Galveston County's authorized Representative when either party recognizes a proposed change (RFP) may affect the progress of the work as scheduled.

5. Any claim for damages of any character, delays for which the Owner is liable under the Contract Documents, extra work or extra compensation of any other nature, shall be waived unless notice thereof is given to Galveston County's authorized Representative, in writing, within 10 days after the occurrence of the event which is relied upon to justify the claim or within such time as the event should have reasonably been discovered by the Contractor, and in any event, before extra cost is incurred.

D. Minor Changes in the Work

1. The Architect or Engineer will have authority to order through Galveston County's authorized Representative minor changes in the Work not involving an adjustment in the Contract Sum or an extension of the Contract Time and not inconsistent with the intent of the Contract Documents. Such changes shall be effected by written order and such changes shall be binding on the Owner, Galveston County's authorized Representative, and the Contractor. The Contractor shall carry out such written orders promptly.

28. Uncovering and Corrections of Work

A. Uncovering of Work

1. If any portion of the Work should be covered contrary to the request of Galveston County's authorized Representative or Architect or Engineer, or to requirements specifically expressed in the Contract Documents, it must, if required in writing by Galveston County's authorized Representative, be uncovered for their observation and replaced, at the Contractor's expense.
2. If any other portion of the Work has been covered which neither Galveston County's authorized Representative nor the Architect or Engineer has specifically requested to observe prior to being covered, the Architect or Engineer or Galveston County's authorized Representative may request to see such Work and it shall be uncovered by the Contractor. If such Work be found in accordance with the Contract Documents, the cost of uncovering and replacement shall, by appropriate Change Order, be charged to the Owner or Construction Manager, as the case may be. If such Work were found not in accordance with the Contract Documents, the Contractor shall pay such costs unless it is found that this condition was caused by a separate Contractor employed as provided in Article15, and in that event, the separate Contractor shall be responsible for the payment of such costs.

B. Correction of Work

1. The Contractor shall promptly correct all Work rejected by the Architect or Engineer or Galveston County's authorized Representative as defective or as failing to conform to the Contract Documents whether observed before or after Substantial Completion and whether or not fabricated, installed complete. The Contractor shall bear all costs of correcting such rejected Work, including compensation for the Architect or Engineer's and/or Galveston County's authorized Representative's additional services made necessary thereby.
2. If, within one year after the Date of Substantial Completion of Work or designated portion thereof, or within one year after acceptance by the Owner of designated equipment or within such longer period of time as may be prescribed by law or by the terms of any applicable special warranty required by the Contract Documents, the Contractor is notified of defective work he shall correct it promptly. This obligation shall survive the termination of the Contract. The Owner or Galveston County's authorized Representative shall give such notice promptly after discovery of the condition.
3. The Contractor shall remove from the site all portions of the Work which are defective or nonconforming and which have not been corrected under Subparagraphs 8.1, 28.B.1 and 28.B.2, unless removal has been waived by the Owner.
4. If the Contractor fails to correct defective or nonconforming Work as provided in Subparagraphs 8.1, 28.B.1 and 28.B.2, the Owner or Galveston County's authorized Representative may correct it in accordance with Article 9 in the Trade Contract.
5. If the Contractor does not proceed with the correction of such defective or nonconforming work within a reasonable time fixed by written notice from Galveston County's authorized Representative, the Owner or Galveston County's authorized Representative may remove it and may store the materials or equipment at the expense of the Contractor. If the Contractor does not pay the cost of such removal and storage within ten days thereafter, the Owner or Galveston County's authorized Representative may upon ten additional days' written notice sell such Work at auction or at private sale and shall account for the net proceeds thereof, after deducting all the costs that should have been borne by the Contractor, including compensation for the Galveston County's authorized Representative's additional services made necessary thereby. If such proceeds of sale do not cover all costs, which the Contractor should have born, the difference shall be charged to the Contractor and an appropriate Contract Amendment shall be issued. If the payments then or thereafter due the Contractor are not sufficient to cover such amount, the Contractor shall pay the difference to the Owner or Galveston County's authorized Representative.
6. The Contractor shall bear the cost of making good all work of other contractors destroyed or damaged by such removal or correction.
7. Nothing contained in this Article shall be construed to establish a period of limitation with respect to any other obligation, which the Contractor might have under the Contract Documents. The establishment of the time period of one year after the Date of Substantial Completion or such longer period of time as may be prescribed by law or by the terms of any warranty required by the Contract Documents, relates only to the specific obligation of the Contractor to correct the Work, and has no relation- ship to the time within which his obligation to comply with the Contract Documents

may be sought to be enforced, nor to the time within which proceedings maybe commenced to establish the Contractor's liability with respect to his obligations other than specifically to correct the Work.

29. Termination of the Contract A. Termination by the Contractor

1. If the Work is stopped, under an order of any court or other public authority having jurisdiction, for a period of three (3) months, through no fault of the Contractor or a Sub-Contractor or their agents or employees or any other persons performing any of the Work under a contract with the Contractor, or if Galveston County should fail to pay the Contractor in accordance with Article 3 of the Trade contract, the Contractor may, upon thirty (30) additional days written notice terminate the contract and recover from the Owner payment for all Work executed and for any proven loss sustained upon any materials, equipment, tools, construction equipment and machinery.

B. Termination by the Owner

1. If the Contractor is adjudged a bankrupt, or if he makes a general assignment for the benefit of his creditors, or if a receiver is appointed on account of his insolvency, or if he persistently or repeatedly refuses or fails, except in cases for which extension of time is provided, to supply enough properly skilled workmen or proper materials, or if he fails to make prompt payment to Sub-Contractors or suppliers, or persistently disregards laws, ordinances, rules, regulations or orders of any public authority having jurisdiction, or otherwise is guilty of a substantial violation of a provision of the Contract Documents, then the Owner without prejudice to any right or remedy and after giving the Contractor and his surety, if any, ten days written notice, terminate the Contract and take possession of the site and of all materials, equipment, tools, construction equipment and machinery thereon owned by the Contractor and may finish the work by whatever method he may deem expedient. In such case, the Contractor shall not be entitled to receive any further payment until the Work is finished.
2. If the unpaid balance of the Contract Sum exceeds the costs of finishing the Work, including compensation for the Architect or Engineer or Galveston County's authorized Representative's additional services made necessary thereby, such excess shall be paid to the Contractor. If such costs exceed the unpaid balance, the Contractor shall pay the difference to the Owner.

C. Termination for Convenience

1. The Owner reserves the right, for its convenience, to terminate the Work of the Contractor(s), in whole or in part, at any time by providing written or telegraphic notice to the Contractor stating the extent and effective date of such termination; whereupon such Contractor(s) shall: (i) stop all work and place no further orders or subcontracts for materials, services, equipment or supplies, except as may be necessary to complete portions of the Work not terminated; (iii) terminate work orders, purchase orders and subcontracts outstanding to the extent that they relate to the terminated portion of the Work; (iv) take any action necessary to protect property in Contractor's possession in which the Owner has or may acquire an interest; (v) complete performance of the un-terminated portion of the Work; and (vi) take any other action toward termination of the Work which Galveston County's authorized Representative may direct.
2. In the event that all or a portion of the Work of the Contractor(s) is terminated pursuant to Subparagraph 29.C.1 Contractor(s) shall be entitled to payment of those costs relating to the terminated portion of the Work as hereinafter defined. The Owner shall thereafter pay to the Contractor(s), subject to the limitations herein set forth, the sum of the following costs which represent the respective interest of the Contractor(s) to the terminated portion of the Work:
   a. Portion of the Contract Sum related to the work completed by the Contractor immediately prior to Notice of Termination.
   b. Expenses incurred or for which the Contractor is liable as the result of termination by Contractor of respective work orders, purchase orders or subcontracts related to the Notice of Termination including overhead and profit or completed work.
   c. No payment shall be made for work not actually performed. Deductions will be made by Owner for amounts previously paid to Contractor and for any amounts which may be due Owner, or which Owner may offset or withhold by the terms hereof. The total amount of all payments to Contractor shall not exceed in any event, the proportion of the total Contract Sum that the Work actually performed (including materials delivered to the

project site minus credits for returned goods or cancelled orders) at the date of termination bears to the entire Work to be performed hereunder.

d. After receipt of a Notice of Termination, Contractor shall submit to Galveston County's authorized Representative its written termination claim in the form and with the certification which the Owner or Galveston County's authorized Representative may require. Such claims shall be submitted promptly, but in no event more than ninety (90) days after the effective date of termination.

30. Temporary Services and Systems

A. General

1. Galveston County's authorized Representative will provide temporary toilets, excluding Contractor's trailer hookup.
2. Galveston County's authorized Representative will provide temporary fire safety equipment for general use. Each Contractor shall provide their own fire extinguishers for their trailers, and for use, as required when cutting and burning are performed.
3. Galveston County's authorized Representative will provide rubbish containers and rubbish disposal service unless noted otherwise in the Proposal Form. The Contractor must not use these containers for the disposal of earth, surplus or slop concrete, hazardous materials, and/or steel stock. Each Contractor must dispose of these elements at his own expense.
4. For further description and location of temporary services and system, refer to the Site Utilization Plan and the following paragraphs. Each Contractor shall be responsible for furnishing, installing or otherwise providing any or all of the following temporary facilities, structures or services as they may be necessary or required for or during, performance of the work of his Contract
   a) Temporary field office facilities complete, including all furniture, heat, cooling, lighting, plumbing and toilet fixtures as he may require for his exclusive use. (Site location and number are subject to approval of Galveston County's authorized Representative).
   b) Temporary storage facilities, sheds or buildings as may be required for the proper protection or storage of materials and/or equipment. (Site location and number are subject to approval of Owner).
   c) Temporary extension from, and hookup to, all temporary utilities which have been provided to a common point for use by the Contractors during construction.
   d) Maintenance, cleanup and removal of all temporary facilities provided by the Contractor for his exclusive use.
   e) Furnishing, erection, maintenance and removal of all temporary hoists and scaffolding as may be required by the Contractor for the performance of the work of his Contract.
   f) Temporary drainage and dewatering measures including all pumping, drainage, erosion control or other work required to protect the work of the Contractor while in progress.
   g) All temporary facilities, structures, services or items of work specifically required or defined in the Scope of Work of the Contract (Proposal Package) or otherwise required by the Contract Documents for his work.
   h) Distribution of drinking water for his construction personnel.
   i) At the end of the day's work, all work subject to damage by adverse weather conditions shall be covered or otherwise protected as required. Weather protection shall be adequate to permit each Contractor to work on a continuous basis without shutdown due to temperature or weather conditions as far as possible.
   j) No temporary service shall be removed or disconnected until the new parts have been installed to replace them, properly connected and ready for use. The changing over from temporary to permanent work shall be done expeditiously, and if possible so that no part of the building or premises shall be without adequate service. If this is not possible, the procedure must be planned and submitted to Galveston County's authorized Representative for approval.

B. Temporary Electric System

1. Electric power for use in temporary trailers shall be available to the Contractor from a central location in the trailer area. The Contractor shall furnish any required extensions from this location at his own expense.
2. Electric service and distribution. The central service will be installed from the Utility Company's service point to the central distribution point on-site. Distribution from this point to the central

connection point in the trailer area will be installed including any transformers, main disconnected switch or switches, any metering, supports, protective enclosure and grounding

a. Service will terminate in a panel board equipped with circuit breakers. Service characteristics available will be 120/208 volts, three phase, 4 wire web, unless otherwise specified. Total capacity to be shared shall be 400 amps. Use of electricity for basic heating of trailers will not be allowed

b. The distribution will be extended to the designated distribution points within the building. These distribution locations will provide:

1. Panel board for breakers for lighting and hand tool circuits throughout the area served.

2. Panel board and breakers for twenty (20) 20 amp circuits for connection of bench tools, such as, pipe threaders, etc.

c. The distribution will be extended upward to other floors of the building as indicated.

d. As the work progresses, structure, and decks are constructed, the lighting/hand tool circuits will be installed throughout the building according to the following criteria

e. Temporary lighting shall be installed in all areas and rooms, including all platforms, levels and stairways but excluding crawl spaces, duct and riser shafts. Temporary lighting shall be a minimum of 1/4 watt per square foot. For all areas 3,200 square feet or less, 100-watt lamps spaced approximately at 20 foot centers shall be used. Each room or enclosed area shall have, at least, one lighting and one tool outlet. Where 100 watt lights are used, the outlets shall consist of double weatherproof sockets. One (1) socket shall be used for the 100-watt lamp and the other socket shall be used for portable power tools.

f. Any temporary lighting required beyond the foregoing shall be provided by the party requiring the same and the work will be paid for by the Contractor.

g. Any extension cords will be provided by the Contractor.

h. Connecting and disconnecting Contractor tools and equipment to (and from) the above distribution system will be performed by qualified personnel, ALL grounding as required by the National Electrical Code, OSHA or any and all local codes, including approved ground fault interrupters shall be furnished and installed at the Contractors expense.

i. All contractors must share the system provided and average usage is anticipated. Any contractor anticipating fabrication area or operations must coordinate his needs through Galveston County's authorized Representative. If additional distribution is required and available at the control service, it will be provided at the Contractor's expense.

3. Operations and Maintenance

a. The system will be operated during normal work week, defined as five (5) days, including 1/2 hour before regular working hours and 1/2 hour after regular working hours for every trade.

b. Maintenance of the electrical service beyond the duration defined above will be at the expense of the Contractor requesting the service. Charges for maintenance of the services will be made from the Operating Contractor to the Contractor and will not involve (nor occur cost to) Galveston County's authorized Representative or Owner.

4. Relocation to allow construction to proceed and removal when permanent power is available will be coordinated with Galveston County's authorized Representative as part of the maintenance service.

5. The Electrical Contractor may be requested in a Proposal Package to include part or all of the above described temporary service and distribution and/or maintenance. (Review Scope of Work carefully).

6. Payment for Electrical Energy

a. The Owner will pay for the cost of all energy consumed by all trades during the construction

C. Temporary heating

1. Construction Heating

2. Each Contractor shall be responsible for providing his own temporary heat and weather tight enclosures as required for the satisfactory performance of his work and to comply with the construction schedule. Temporary heat systems must be approved by Galveston County's authorized Representative.

3. Temporary Use of Building System
4. It is not anticipated that the permanent building system will be utilized to provide "temporary heat" during the major portion of construction operations
5. It is anticipated that activation, testing and balancing of the building heating/cooling system will be critical to the completion and acceptance of the project and therefore actuation, of the permanent system will be scheduled for the earliest possible time.
6. Within these parameters the Contractor must provide any supplemental heat required to perform his work.
7. In the proposal form, the Contractor may be requested to indicate and amount included for "supplemental heat" (not construction heating) as Galveston County's authorized Representative may request proposals for providing an interim heating system from the Mechanical Contractor. (Review Scope of Work Carefully).

D. Temporary Water

1. Potable water shall be available to the Contractor at a central location. Extensions of the water supply for Contractor's exclusive use shall be the responsibility of the Contractor.
2. Temporary water distribution as indicated on Site Utilization will be provided for the use of all Contractors and to provide a temporary fire protection system.
3. The temporary fire protection system shall be installed using the permanent standpipes and risers, and shall be installed as rapidly as construction permits.
4. Temporary fire standpipe connections, including pipe fittings, and valves shall be provided at the location of each permanent hose rack or station as shown on the contract drawings.
5. At each temporary riser connection shall be provided a temporary hose rack, 100 feet of 1-1/2" UL approved fire hose system with brass couplings and a 1-1/2" nozzle. The system shall also provide 2-1/2" valved, capped connection at each location together with 1-1/2" valved connection with a pair of hose bibs. Hose adapters on the discharge side of the 2-1/2" valve shall be compatible with hose fittings used by the local fire department.
6. All Contractors are responsible for providing their own hoses to bring water from the hose rack location to their work **areas**. Only heavy-duty 3/4" hose in good conditions will be permitted in use in the interior of the building. The discharge end of each hose shall be equipped with a means of positive shut off. The use of hoses, which leak at connections or elsewhere throughout their length, will not be permitted. All hoses shall be disconnected from hose bibs when not in use and before the end of each work day.
7. When no longer required, as determined by Galveston County's authorized Representative, the temporary systems shall be dismantled and removed.
8. Water will be provided to all Contractors without cost, and any billings therefore will be paid by Galveston County's authorized Representative.
9. The Plumbing Contractor may be requested in the Proposal Package "Scope of Work" to include furnishing installing and dismantling and removing the temporary water/temporary fire protection system described above.
10. In such event the temporary equipment and materials so removed shall become the property of the Plumbing Contractor. (Review Scope of Work Carefully)

E. Housekeeping - Cleaning and Rubbish Removal

1. Each Contractor shall be responsible for daily and final cleanup and continuous removal of all rubbish and debris from the building and site. Galveston County's authorized Representative shall provide, erect, locate, and maintain a rubbish chute and/or rubbish collection dumpster system for use of all trades. Each Contractor shall be responsible to deposit his daily rubbish into these chutes or dumpster locations as designated and provided by Galveston County's authorized Representative. Failure of a Contractor to do so will require that this be done by Galveston County's authorized Representative after proper notice to the Contractor and labor for doing so shall be charged to the responsible Contractor
2. The jobsite shall be maintained in a neat orderly condition and kept free from accumulations of waste materials and rubbish during the entire construction period. Contractor will remove all crates, cartons and other flammable waste materials or trash from the work areas at the end of each working day.
3. Elevator shafts, electrical closets, pipe and duct shafts, chases, furred spaces and similar spaces which are generally unfinished, shall be cleaned and left free from rubbish, loose plaster, mortar drippings, extraneous construction materials, dirt and dust before substantial completion review.

4. Each Contractor shall be responsible for cleaning all surfaces as necessary to make them free of spatters or other deposits of paint, plaster, mortar, concrete, adhesives, roofing, dirt, soil, oil, or any other material foreign to the surface involved. Galveston County's authorized Representative shall back-charge to the guilty party the cost of cleaning which is required by accidental soiling or damage by another Contractor.
5. Each Contractor is responsible to share the task of litter cleanup (e.g., coffee cups, lunch wrappers, etc.).
6. However, to insure proper cleanup, notwithstanding the Contractor's obligations to cleanup any debris resulting from his own operations, and following proper notices Galveston County's authorized Representative will undertake the cleanup and disposal of litter and other debris whose source is unidentifiable. The cost of this special cleanup detail will be assessed weekly against all Contractors on a per capita basis and invoiced monthly. If any cleanup invoice is not paid within thirty (30) days, it will be back-charged against the respective Contractor's monthly payment application.
7. The Contractor shall be responsible to maintain his own trailer, storage and work areas in a sanitary condition to minimize the hazard of attracting vermin and breeding mosquitoes. If the Contractor fails to comply, Galveston County's authorized Representative may do so, and the cost thereof shall be charged to the Contractor. Rodent extermination materials shall be those approved by the local health department or other agency having jurisdiction.
8. Use only cleaning materials and methods recommended by manufacturer of surface to be cleaned. Use cleaning materials only on surfaces recommended by cleaning material manufacturer. Each Contractor shall be responsible for assuring that affected employees are provided with, and required to use, all needed personal protective devices in connection with cleaning.
9. At completion of work, each Contractor shall remove tools, equipment, machinery, and surplus materials from the project site and perform whatever additional cleaning is specified in the Proposal Form.

F. Vehicle cleaning - Trucking

1. Galveston County's authorized Representative will designate the wash-down area to be utilized by the Contractors. The "wheel wash station" will be equipped with a hose connection and drainage area. The Contractor shall provide manpower, hose and other supplemental scrapers, brushes, etc., which may be required to satisfactorily clean his vehicles leaving the site. The construction of this temporary facility may be included in the "Scope of Work" of the excavation or site Preparation Proposal Package, Review scope of work carefully.
2. All vehicles shall be cleaned of all mud and debris before leaving the site. Each Contractor shall be responsible for providing whatever personnel may be required to perform the required vehicle cleaning throughout the progress of his work. The wash-down area shall not be used for cleaning out of concrete mix trucks.
3. Cleaning of concrete equipment shall be performed at locations designated by Galveston County's authorized Representative. Cleaning shall be conducted in such a manner as to prevent spillage of fluid or concrete to the ground or penetration of existing ground soil. The responsible Contractor shall remove from the site all residues accumulated from the cleaning operations of concrete equipment..
4. All trucks leaving the site with earthen materials or loose debris shall be loaded in a manner that will prevent dropping of materials on streets, and when necessary, shall have suitable coverings fastened over the load before they enter surrounding paved streets. Trucks bringing earthen materials over paved streets to the site shall be similarly loaded and covered. The Contractor shall conform to all local regulations regarding load limits and be responsible for any costs due to failure to comply with the above.

G. Site Security, Personnel and Property Protection

1. Contractor shall maintain the security of the worksite and shall restrict access to the site to the following:
   a. its employees;
   b. employees of subcontractors;
   c. representatives of manufacturers whose goods are utilized in the work and are called to the site by either the Contractor or the Program Administrator; and
   d. agents and/or employees of the County.

2. Contractor shall provide adequate protection to persons on the worksite, adjacent properties, and utilities as is necessary to keep each free of damage or injury. Contractor shall furnish all barricades, warning lights and other safety devices necessary for the safety and protection of the public and shall remove them upon completion of the work performed on those premises under the terms of this Contract.
3. Contractor will have complete control over the work site and shall be fully responsible for any loss of or damage to any County property from any cause and will reimburse County in the event of any loss or damage to County's property from any cause.
4. Contractor shall take proper means to protect adjacent or adjoining properties which might be injured or seriously affected by construction undertaken under this Agreement from any damage or injury by reason of said process of construction. Contractor shall be liable for any and all claims for such damage on account of its failure to fully protect all adjoining properties.
5. At no time remove, alter or render ineffective any barricades, railings or cover on the project without written permission of Galveston County's authorized Representative. Where these safety devices are to be turned over to others, upon completion of the work, the devices shall be repaired or replaced so that they meet the required standards prior to turnover.
6. The Contractor shall provide and maintain proper warnings and detour signs at all pedestrian and vehicular closures, intersections, and along detours, directing traffic around closed portions of roadways. The Contractor shall, at his own expense, wherever necessary or required, provide and maintain fences, temporary roadways, temporary cross signs, watchmen, warning lights and take such other precautions as may be necessary to protect life and property, and shall be responsible for all damages occasioned in any way by his act or neglect. All barricades and obstructions shall be illuminated at night, and all lights shall be kept on from one-half hour before sunset, until onehalf hour after sunrise.
7. The Contractor shall provide such openings, channels, chases, flues, etc., if any, and do such cutting, patching, finishing, etc., if any, required by the Contract Documents.
8. Unless otherwise specified, the Contractor shall furnish and install all sleeves, inserts, hangers, etc., required for the execution of his work.
9. When performing any cutting, removal, creating opening or holes, etc., the Contractor, by use of barricades, flagmen, or other means, shall provide protective measures to assure that other workmen or the public are not exposed to potential injury by the operation being conducted.
10. The Contractor shall be responsible for handling and transporting (including lifting) his material and equipment to the location of need in a timely manner.
11. Any vertical lifting device, whether stationary material hoist, mobile crane or other means, a Contractor plans to use will be implemented only after prior coordination and approval of Galveston County's authorized Representative.

31. Order of Precedence

A. In the event of any conflict or discrepancy in the provisions of the contract documents, the documents shall be interpreted on the basis of the following order or priority:

1. Agreement between Owner and Contractor
2. Proposal Form
3. Addenda, with later date having greater priority
4. General Conditions
5. Project Manual
6. Drawings, large scale details and/or schedules
7. Drawings, small scale

32. WAGE RATES

This Contract is a Public Works Contract governed by V.T.C.A., Government Code, Chapter 2258. That Act requires Contractor to pay workers not less than the general prevailing rate of per diem wages for work of a similar character in the locality in which the work is performed and not less than the general prevailing rate of per diem wages for legal holiday and overtime work.

Prevailing wage rates determined by the United States Department of Labor in accordance with the Davis-Bacon Act (40 U.S.C. Section 276a et seq) are used in this Contract and are incorporated and made a part hereof.

In the event other crafts or types of workers are required than are listed therein, such workers shall be paid at a rate not less than the prevailing rate for similar workers in the Galveston County area.

Contractor acknowledges that:

A. Pursuant to V.T.C.A., Government Code §2258.022, a violation of the obligation to pay workers the prevailing
wages shall result in Contractor paying the County the amount of $60.00 for each worker employed for each calendar day or part of the day that the worker is paid less than the wage rates stipulated in the Contract; and

B. Contractors and Subcontractors shall be required to keep a record showing the name and occupation of each worker employed by Contractor or Subcontractor in the construction of the work called for in the contract and the actual per diem wages paid to each worker.

C. **The record shall be submitted weekly on Labor Department forms to the Galveston County Wage Compliance Officer.**
Contractor represents it has read this law and the penalties provided prior to entering into this agreement.

D. Wage Rates in force for Galveston County are included in Section 01012 Wage Scale.

33. Force Majeure

If by reason of force Majeure either Party shall be rendered unable, wholly or in part, to carry out its responsibilities under this contract by any occurrence by reason of force Majeure, then the Party unable to carry out its responsibility shall give the other Party notice and full particulars of such force Majeure in writing within a reasonable time after the occurrence of the event, and such notice shall suspend the Party's responsibility for the continuance of the forced Majeure claimed, but for no longer period.

Force Majeure means acts of God, floods, hurricanes, tropical storms, tornadoes, earthquakes, or other natural disasters, acts of a public enemy, acts of terrorism, sovereign conduct, riots, civil commotion, strikes or lockouts, and other causes that are not occasioned by either Party's conduct which by the exercise of due diligence the Party is unable to overcome and which substantially interferes with operations.

34. Salvage

Any materials, equipment and fixtures specifically ordered to be salvaged under these specifications shall remain the property of County and will be delivered to the site designated by Galveston County's authorized Representative. All other items shall be disposed of by Contractor in compliance with all applicable laws and regulations.

35. Open Records

Contractor acknowledges that County is a governmental entity and this Agreement is an open record under the Open Records Act and will be discussed and voted upon in a public meeting.

36. Performance and Payment Bond(s)

V.T.C.A., Government Code Chapter 2253, requires a Performance Bond (for contracts in the excess of $100,000) and a Payment Bond (for contracts in excess of $25,000), to be provided by the Contractor. Each bond required shall be equal to the total contract price and shall be issued by a satisfactory surety company. The bond(s) will remain in full force and effect until final completion and acceptance of the work.

The bond(s) are to be made payable to the County of Galveston. They shall be written on forms provided by the surety for public works projects in Texas. A surety licensed to do business in the state of Texas must execute the bond.

Proposers should familiarize themselves with the entire provisions of V.T.C.A., Chapter 2253 and the penalties provided for its violation before submitting their Proposal.

End of
General Terms and Conditions of the Contract

Contractor acknowledges that County is a governmental entity and this Agreement is an open record under the Open Records Act and will be discussed and voted upon in a public meeting.

36. Performance and Payment Bond(s)

V.T.C.A., Government Code Chapter 2253, requires a Performance Bond (for contracts in the excess of $100,000) and a Payment Bond (for contracts in excess of $25,000), to be provided by the Contractor. Each bond required shall be equal to the total contract price and shall be issued by a satisfactory surety company. The bond(s) will remain in full force and effect until final completion and acceptance of the work.

The bond(s) are to be made payable to the County of Galveston. They shall be written on forms provided by the surety for public works projects in Texas. A surety licensed to do business in the state of Texas must execute the bond.

Proposers should familiarize themselves with the entire provisions of V.T.C.A., Chapter 2253 and the penalties provided for its violation before submitting their Proposal.

End of
General Terms and Conditions of the Contract

DOCUMENT 00104

Specific Conditions of the Contract

SPECIAL CONTRACT CONDITIONS FOR CONSTRUCTION

I. Contract and Contract Documents

(a) The Plans, Specifications and Addenda, General Provisions shall form part of this contract and the provisions thereof shall be as binding upon the parties hereto as if they were herein fully set forth.

2. Definitions

Whenever used in any of the contract Documents, the following meanings shall be given to the terms here in defined:

(a) The term "Contract" means the Contract executed between the County of Galveston, hereinafter called the Owner, _____ and , hereinafter called Contractor, of which these GENERAL CONDITIONS, form a part.

(b) The term "Project Area" means the area within which are the specified Contract limits of the Improvements contemplated to be constructed in whole or in part under this contract.

(c) The term "Architect" means Brax Easterwood Design, LLC., Architect in charge, serving the Owner with architectural or engineering services, his successor, or any other person or persons, employed by the Owner for the purpose of directing or having in charge the work embraced in this Contract.

(d) The term "Contract Documents" means and shall include the following: Invitation to Bid, Signed Copy of Bid, General Conditions, Special Contract Conditions for Construction, Acknowledgement and Certification Regarding Debarment, Non-Collusion Affidavit, Vendor Qualification Packet, Payment and Performance Bonds, Contract Award, Addenda (if any), Technical Specifications, and Drawings (as listed in the Schedule of Drawings).

(e) The term "Substantially Complete" shall mean that the work is fully completed with the exception of minor miscellaneous work and adjustments.

3. Supervision by Contractor

(a) Except where the Contractor is an individual and gives his personal supervision to the work, the Contractor shall provide a competent superintendent, satisfactory to the Local Public Agency and the Architect, on the work at all times during working hours with full authority to act for him. The Contractor shall also provide an adequate staff for the proper coordination and expediting of his work.

(b) The Contractor shall lay out his own work and he shall be responsible for all work executed by him under the Contract. He shall verify all figures and elevations before proceeding with the work and will be held responsible for any error resulting from his failure to do so.

4. Subcontracts

(a) The Contractor shall not execute an agreement with any subcontractor or permit any subcontractor to perform any work included in this contract until he has verified the subcontractor as eligible to participate in federally funded contracts.

(b) No proposed subcontractor shall be disapproved by the city/county except for cause.

(c) The Contractor shall be as fully responsible to the city/county for the acts and omissions of his subcontractors, and of persons either directly or indirectly employed by them.

(d) The Contractor shall cause appropriate provisions to be inserted in all subcontracts relative to the work and required compliance by each subcontractor with the applicable provisions of the Contract.

(e) Nothing contained in the Contract shall create any contractual relation between any subcontractor and the Owner.

5. Fitting and Coordination of Work

The Contractor shall be responsible for the proper fitting of all work and for the coordination of the operations of all trades, subcontractors, or material suppliers engaged upon this Contract.

6. Payments to Contractor

(a) Partial Payments

l) The Contractor shall prepare his requisition for partial payment as of the last day of the month and submit it, with the required number of copies, to the Architect for his approval. The amount of the payment due the Contractor shall be determined by adding to the total value of work completed to date, the value of materials properly stored on the site and deducting (l) Five percent (5%) of the total amount, to be retained until final payment and (2) the amount of all previous payments. The total value of work completed to date shall be based on the estimated quantities of work completed and on the unit prices contained in the agreement. The value of materials properly stored on the site shall be based upon the estimated quantities of such materials and the invoice prices. Copies of all invoices shall be available for review of the Architect,

2) Monthly or partial payments made by the Owner to the Contractor are moneys advanced for the purpose of assisting the contractor to expedite the work of construction. The Contractor shall be responsible for the care and protection of all materials and work upon which payments have been made until final acceptance of such work and materials by the Owner. Such payments shall not constitute a waiver of the right of the Owner to require the fulfillment of all terms of the Contract and the delivery of all improvements embraced in this Contract complete and satisfactory to the Owner in all details.

(b) Final Payment

l) After final inspection and acceptance by the Owner of all work under the Contract, the Contractor shall prepare his requisition for final payment which shall be based upon the careful inspection of each item of work at the applicable unit prices stipulated in the Agreement. The total amount of the final payment due the Contractor under this contract shall be the amount computed as described above less all previous payments.

2) The Owner before paying the final estimate, shall require the Contractor to furnish releases or receipts from all subcontractors having performed any work and all persons having supplied materials, equipment (installed on the Project) and services to the Contractor, if the Owner deems it necessary in order to protect its interest. The Owner may, if it deems such action advisable, make payment in part or in full to the Contractor without requiring the furnishing of such releases or receipts and any payments made shall in no way impair the obligations of any surety or sureties furnished under this Contract.

3) Any amount due the Owner under Liquidated Damages, shall be deducted from the final payment due the contractor.

(c) Payments Subject to Submission of Certificates

Each payment to the Contractor by the Owner shall be made subject to submission by the Contractor of all written certifications required of him and his subcontractors.

(d) Withholding Payments

The Owner may withhold from any payment due the Contractor whatever is deemed necessary to protect the Owner, and if so elects, may also withhold any amounts due from the Contractor to any subcontractors or material dealers, for work performed or material furnished by them. The foregoing provisions shall be construed solely for the benefit of the Owner and will not require the Owner to determine or adjust any claims or disputes between the Contractor and his subcontractors or material dealers, or to withhold any moneys for their protection unless the Owner elects to do so. The failure or refusal of the Owner to withhold any moneys from the Contractor shall in no way impair the obligations of any surety or sureties under any bond or bonds furnished under this Contract.

7. Changes in the Work

(a) The Owner may make changes in the scope of work required to be performed by the Contractor under the Contract without relieving or releasing the Contractor from any of his obligations under the Contract or any guarantee given by him pursuant to the Contract provisions, and without affecting the validity of the guaranty bonds, and without relieving or releasing the surety or sureties of said bonds. All such work shall be executed under the terms of the original Contract unless it is expressly provided otherwise. Additionally, all such change orders must be approved by the CDBG staff prior to execution of same.

(b) Except for the purpose of affording protection against any emergency endangering health, life, limb or property, the Contractor shall make no change in the materials used or in the specified manner of constructing and/or installing the improvements or supply additional labor, services or materials beyond that actually required for the execution of the Contract, unless in pursuance of a written order from the Owner authorizing the Contractor to proceed with the change. No claim for an adjustment of the Contract Price will be valid unless so ordered.

(c) If applicable unit prices are contained in the Agreement, the Owner may order the Contractor to proceed with desired unit prices specified in the Contract; provided that in case of a unit price contract the net value of all changes does not increase the original total amount of the agreement by more than twenty-five percent (25%) or decrease the original the total amount by eighteen percent (18%).

(d) Each change order shall include in its final form:

1) A detailed description of the change in the work.

2) The Contractor's proposal (if any) or a confirmed copy thereof.

3) A definite statement as to the resulting change in the contract price and/or time.

4) The statement that all work involved in the change shall be performed in accordance with contract requirements except as modified by the change order.

5) The procedures as outlined in this Section for a unit price contract also apply in any lump sum contract.

8. Estimated Quantities

This Contract, including the specifications, plans and estimates, is intended to show clearly all the work to be done and material to be furnished hereunder. The estimated quantities of the various classes of work to be done and material to be furnished under this contract are approximate and are to be used as a basis for estimating the probable cost of the work and for comparing the proposals offered for the work. It is understood and agreed that the actual amount of work to be done and material to be furnished under this contract may differ somewhat from these estimates, and that the basis for payment under this contract shall be the plan quantity or actual amount of such work done whichever is specified. It is further understood that the County does not guarantee any minimum amount of work under this Contract.

Contractor agrees that it will make no claim for damages, anticipated profits or otherwise on account of any differences which may be found between the quantities of work actually done, the material actually furnished under this Contract and the estimated quantities contemplated and contained in the proposals.

9. Claims for Extra Cost

(a) If the Contractor claims that any instructions by Drawings or otherwise involve extra cost or extension of time, he shall, within ten days after the receipt of such instructions, and in any event before proceeding to execute the work, submit his protest thereto in writing to the Owner, stating clearly and in detail the basis of his objections. No such claim will be considered unless so made.

(b) Claims for additional compensation for extra work, due to alleged errors in ground elevations, contour lines, or bench marks, will not be recognized unless accompanied by certified survey data, made prior to the time the original ground was disturbed, clearly showing that errors exist which resulted, or would result, in handling more material, or performing more work, than would be reasonably estimated from the Drawings and maps issued.

(c) Any discrepancies which may be discovered between actual conditions and those represented by the Drawings and maps shall be reported at once to the Owner and work shall not proceed except at the Contractor's risk, until written instructions have been received by him from the Owner.

(d) If, on the basis of the available evidence, the Owner determines that an adjustment of the Contract Price and/or time is justifiable, a change order shall be executed.

10. Time

The Contractor is advised that time for completion will consist of the number of calendar days set out in the Contract Award. The time for completion will begin to run on the day after the issuance of a notice to proceed by the County. The Contractor is required to start work no later than ten (10) working days after the issuance of the written notice to proceed. Failure to timely commence operations may be deemed by the County to be a default. The Contractor will complete the work at that site within the time period specified. If there is more than one site listed on the notice to proceed, work for all sites must be completed not later than is specified for each site.

ll. Termination, Delays, and Liquidated Damages

(a) Right of the Owner to Terminate Contract.

In the event that any of the provisions of this contract are violated by the Contractor, or by any of his subcontractors, the Owner may serve written notice upon the Contractor and the Surety of its intention to terminate the contract. The notices shall contain the reasons for such intention to terminate the contract, and unless such violation or delay shall cease and satisfactory arrangement of correction be made within ten days, the contract shall, upon the expiration of said ten (10) days, cease and terminate. In the event of any such termination, the Owner shall immediately serve notice thereof upon the Surety and the Contractor. The Surety shall have the right to take over and perform the contract. Provided, however, that if the Surety does not commence performance thereof within ten (10) days from the date of the mailing to such Surety of notice of termination, the Owner may take over the work and complete the project by bid/contract or by force account at the expense of the Contractor and his Surety shall be liable to the Owner for any excess cost incurred. In such event the Owner may take possession of and utilize in completing the work, such materials, appliances, and plant as may be on the site of the work and necessary therefore.

(b) Liquidated Damages for Delays.

Contractor agrees that time is of the essence of this contract and that for each day of a delay of a day beyond the number of working days or calendar days herein agreed upon the completion of the work herein specified and contracted for (after due allowance for such extension of time as is provided for under Extension of Time hereinabove) County may withhold permanently from Contractor's total compensation the sum of $1,000 for each calendar day of delay, until the work is completed, as liquidated damages for such delay. The Contractor and his sureties shall be liable to the Owner for the amount thereof.

(c) Excusable Delays.

l) The right of the Contractor to proceed shall not be terminated nor shall the Contractor be charged with liquidated damages for any delays in the completion of the work due to:

2) Any acts of the Government, including controls or restrictions upon or requisitioning of materials, equipment, tools, or labor by reason of war, national defense, or any other national emergency;

3) Any acts of the Owner;

4) Causes not reasonably foreseeable by the parties to this Contract at the time of the execution of the Contract which are beyond the control and without the fault or negligence of the Contractor, including, but not restricted to, acts of God or of the public enemy, acts of another Contractor in the performance of some other contract with the Owner, fires, floods, epidemics, quarantine, restrictions, strikes, freight embargoes, and weather of unusual severity such as hurricanes, tornadoes, cyclones and other extreme weather conditions.

5) Provided, however, that the Contractor promptly notifies the Owner within ten (10) days in writing of the cause of the delay. Upon receipt of such notification, the Owner shall ascertain the facts and the cause and extent of delay. If, upon the basis of the facts and the terms of this contract, the delay is properly excusable, the Owner shall extend the time for completing the work for a period of time commensurate with the period of excusable delay.

12. Assignment or Novation

The Contractor shall not assign or transfer, whether by an assignment or novation, any of its rights, duties, benefits, obligations, liabilities, or responsibilities under this Contract without the written consent of the Owner; provided, however, that assignments to banks or other financial institutions may be made without the consent of the Owner. No assignment or novation of this Contract shall be valid unless the assignment or novation expressly provides that the assignment of any of the Contractor's rights or benefits under the Contract is subject to a prior lien for labor performed, services rendered, and materials, tools, and equipment supplied for the performance of the work under this Contract in favor of all persons, firms, or corporations rendering such labor or services or supplying such materials, tools, or equipment.

13. Disputes

(a) All disputes arising under this Contract or its interpretation except those disputes covered by FEDERAL LABOR STANDARDS PROVISIONS whether involving law or fact or both, or extra work, and all claims for alleged breach of contract shall, within ten (10) days of commencement of the dispute, be presented by the Contractor to the Owner for decision. Any claim not presented within the time limit specified in this paragraph shall be deemed to have been waived, except that if the claim is of a continuing character and notice of the claim is not given within ten (10) days of its commencement, the claim will be considered only for a period commencing ten (10) days prior to the receipt of the Owner.

(b) The Contractor shall submit in detail his claim and his proof thereof.

(c) If the Contractor does not agree with any decision of the Owner, he shall in no case allow the dispute to delay the work but shall notify the Owner promptly that he is proceeding with the work under protest.

14. Technical Specifications and Drawings

Anything mentioned in the Technical Specifications and not shown on the Drawings or vice versa, shall be of like effect as if shown on or mentioned in both. In case of difference between Drawings and Technical Specifications, the Technical Specifications shall govern. In case of any discrepancy in Drawings, or Technical Specifications, the matter shall be immediately submitted to the Owner, without whose decision, said discrepancy shall not be adjusted by the Contractor, save only at his own risk and expense.

15. Shop Drawings

(a) All required shop drawings, machinery details, layout drawings, etc. shall be submitted to the Architect in copies for approval sufficiently in advance of requirements to afford ample time for checking, including time for correcting, resubmitting and rechecking if necessary. The Contractor may proceed, only at his own risk, with manufacture or installation of any equipment or work covered by said shop drawings, etc. until they are approved and no claim, by the Contractor, for extension of the contract time shall be granted by reason of his failure in this respect.

(b) Any drawings submitted without the Contractor's stamp of approval will not be considered and will be returned to him for proper resubmission. If any drawings show variations from the requirements of the Contract because of standard shop practice or other reason, the Contractor shall make specific mention of such variation in his letter of transmittal in order that, if acceptable, suitable action may be taken for proper adjustment of contract price and/or time, otherwise the Contractor will not be relieved of the responsibility for executing the work in accordance with the Contract even though the drawings have been approved.

(c) If a shop drawing is in accordance with the contract or involves only a minor adjustment in the interest of the owner not involving a change in contract price or time; the Architect may approve the drawing. The approval shall not relieve the Contractor from his responsibility for adherence to the contract or for any error in the drawing.

16. Requests for Supplementary Information

It shall be the responsibility of the Contractor to make timely requests of the Owner for any additional information not already in his possession which should be furnished by the Owner under the terms of this Contract, and which he will require in the planning and execution of the work. Such requests may be submitted from time to time as the need approaches, but each shall be filed in ample time to permit appropriate action to be taken by all parties involved so as to avoid delay. Each request shall be in writing, and list the various items and the latest date by which each will be required by the Contractor. The first list shall be submitted within two weeks after Contract award and shall be as complete as possible at that time. The Contractor shall, if requested, furnish promptly any assistance and information the Architect may require in responding to these requests of the Contractor. The Contractor shall be fully responsible for any delay in his work or to others arising from his failure to comply fully with the provision of this section.

17. Materials and Workmanship

(a) Unless otherwise specifically provided •for in the technical specifications, all workmanship, equipment, materials and articles incorporated in the work shall be new and the best grade of the respective kinds for the purpose. Where equipment, materials, articles or workmanship are referred to in the technical specifications as "equal to" any particular standard, the Architect shall decide the question of equality.

(b) The Contractor shall furnish to the Owner for approval the manufacturer's detailed specifications for all machinery, mechanical and other special equipment, which he contemplates installing together with full information as to type, performance characteristics, and all other pertinent information as required, and shall

likewise submit for approval full information concerning all other materials or articles which he proposes to incorporate.

(c) Machinery, mechanical and other equipment, materials or articles installed or used without such prior approval shall be at the risk of subsequent rejection.

(d) Materials specified by reference to the number or symbol of a specific standard, shall comply with requirements in the latest revision thereof and any amendment or supplement thereto in effect on the date of the Invitation for Bids, except as limited to type, class or grade, or modified in the technical specifications shall have full force and effect as though printed therein.

(e) The Owner may require the Contractor to dismiss from the work such employee or employees as the Owner or the Architect may deem incompetent, or careless, or insubordinate.

18. Samples, Certificates and Tests

(a) The Contractor shall submit all material or equipment samples, certificates, affidavits, etc., as called for in the contract documents or required by the Architect, promptly after award of the contract and acceptance of the Contractor's bond. No such material or equipment shall be manufactured or delivered to the site, except at the Contractor's own risk, until the required samples or certificates have been approved in writing by the Architect. Any delay in the work caused by late or improper submission of samples or certificates for approval shall not be considered just cause for an extension of the contract time.

(b) Each sample submitted by the Contractor shall carry a label giving the name of the Contractor, the project for which it is intended, and the name of the producer. The accompanying certificate or letter from the Contractor shall state that the sample complies with contract requirements, shall give the name and brand of the product, its place of origin, the name and address of the producer and all specifications or other detailed information which will assist the Architect in making a prompt decision regarding the acceptability of the sample. It shall also include the statement that all materials or equipment furnished for use in the project will comply with the samples and/or certified statements.

(c) Approval of any materials shall be general only and shall not constitute a waiver of the Owner's right to demand full compliance with Contract requirements. After actual deliveries, the Architect will have such check tests made as he deems necessary in each instance and may reject materials and equipment and accessories for cause, even though such materials and articles have been given general approval. If materials, equipment or accessories which fail to meet check tests have been incorporated in the work, the Architect will have the right to cause their removal and replacement by proper materials or to demand and secure such reparation by the Contractor as is equitable.

(d) Except as otherwise specifically stated in the Contract, the costs of sampling and testing will be divided as follows:

l) The Contractor shall furnish without extra cost, including packing and delivery charges, all samples required for testing purposes, except those samples taken on the project by the Architect;

2) The Contractor shall assume all costs of re-testing materials which fail to meet contract requirements;

3) The Contractor shall assume all costs of testing materials offered in substitution for those found deficient;

4) The Owner will pay all other expenses.

19. Permits and Codes

(a) The Contractor shall give all notices required by and comply with all applicable laws, ordinances, and codes of the Local Government. All construction work and/or utility installations shall comply with all

applicable ordinances, and codes including all written waivers. Before installing any work, the Contractor shall examine the drawings and technical specifications for compliance with applicable ordinances and codes and shall immediately report any discrepancy to the Owner. Where the requirements of the drawings and technical specifications fail to comply with such applicable ordinances or codes, the Owner will adjust the Contract by Change Order to conform to such ordinances or codes (unless waivers in writing covering the difference have been granted by the governing body or department) and make appropriate adjustment in the Contract Price or stipulated unit prices.

(b) Should the Contractor fail to observe the foregoing provisions and proceed with the construction and/or install any utility at variance with any applicable ordinance or code, including any written waivers (notwithstanding the fact that such installation is in compliance with the drawings and technical specifications), the Contractor shall remove such work without cost to the Owner.

(c) The Contractor shall at his own expense, secure and pay for all permits for street pavement, sidewalks, shed, removal of abandoned water taps, sealing of house connection drains, pavement cuts, buildings, electrical, plumbing, water, gas and sewer permits required by the local regulatory body or any of its agencies.

(d) The Contractor shall comply with applicable local laws and ordinances governing the disposal of surplus excavation, materials, debris and rubbish on or off the Project Area and commit no trespass on any public or private property in any operation due to or connected with the Improvements contained in this Contract.

(e) The Contractor will be required to make arrangements for and pay the water. electrical power, or any other utilities required during construction.

(f) During construction of this project, the Contractor shall use every means possible to control the amount of dust created by construction. Prior to the close of a days work, the Contractor, if directed by the Owner, shall moisten the bank and surrounding area to prevent a dusty condition.

20. Care of Work

(a) The Contractor shall be responsible for all damages to person or property that occur as a result of his fault or negligence in connection with the prosecution of the work and shall be responsible for the proper care and protection of all materials delivered and work performed until completion and final acceptance.

(b) The Contractor shall provide sufficient competent watchmen, both day and night, including Saturdays, Sundays, and holidays, from the time the work is commenced until final completion and acceptance.

(c) In an emergency affecting the safety of life, limb or property, including adjoining property, the Contractor, without special instructions or authorization from the Owner is authorized to act at his discretion to prevent such threatened loss or injury, and he shall so act. He shall likewise act if instructed to do so by the Owner.

(d) The Contractor shall avoid damage as a result of his operations to existing sidewalks, streets, curbs, pavements, utilities (except those which are to be replaced or removed), adjoining property, etc., and he shall at his own expense completely repair any damage thereto caused by his operations.

(e) The Contractor shall shore up, brace, underpin, secure, and protect as maybe necessary, all foundations and other parts of existing structures adjacent to, adjoining, and in the vicinity of the site, which may be in any way affected by the excavations or other operations connected with the construction of the improvements included in this Contract. The Contractor shall be responsible for the giving of any and all required notices to any adjoining or adjacent property owner or other party before the commencement of any work. The

Contractor shall indemnify and save harmless the Owner from any damages on account of settlements or the loss of lateral support of adjoining property and from all loss or expense and all damages for which the Owner may become liable in consequence of such injury or damage to adjoining and adjacent structures and their premises.

21. Accident Prevention

(a) No laborer or mechanic employed in the performance of this Contract shall be required to work in surroundings or under working conditions which are unsanitary, hazardous, or dangerous to his health or safety as determined under construction safety and health standards promulgated by the Secretary of Labor.

(b) The Contractor shall exercise proper precaution at all times for the protection of persons and property and shall be responsible for all damages to persons or property, either on or off the site, which occur as a result of his prosecution of the work.

(c) The Contractor shall maintain an accurate record of all cases of death, occupational disease, or injury requiring medical attention or causing loss of time from work, arising out of and in the course of employment on work under the Contract. The Contractor shall promptly furnish the Owner with reports concerning these matters.

(d) The Contractor shall indemnify and save harmless the Owner from any claims for damages resulting from property damage, personal injury and/or death suffered or alleged to have been suffered by any person as a result of any work conducted under this contract.

(e) The Contractor shall provide trench safety for all excavations more than five feet deep prior to excavation. All OSHA Standards for trench safety must be adhered to by the Contractor.

(f) The contractor shall at all times conduct his work in such a manner as to insure the least possible inconvenience to vehicular and pedestrian traffic. At the close of the work each day, all streets where possible in the opinion of the Owner, shall be opened to the public in order that persons living in the area may have access to their homes or businesses by the use of the streets. Barricades, warning signs, and necessary lighting shall be provided to the satisfaction of the Owner at the expense of the Contractor.

22. Sanitary Facilities

The Contractor shall furnish, install and maintain ample sanitary facilities for the workmen. As the needs arise, a sufficient number of enclosed temporary toilets shall be conveniently placed as required. Drinking water shall be provided from an approved source, so piped or transported as to keep it safe and fresh and served from single service containers or satisfactory types of sanitary drinking stands or fountains. All such facilities and services shall be furnished in strict accordance with existing and governing health regulations.

23. Use of Premises

(a) The Contractor shall confine his equipment, storage of materials, and construction operations to the contract limits as shown on the drawings and as prescribed by ordinances or permits, or as may be desired by the Owner, and shall not unreasonably encumber the site or public rights of way with his materials and construction equipment.

(b) The Contractor shall comply with all reasonable instructions of the Owner and all existing state and local regulations regarding signs, advertising, traffic, fires, explosives, danger signals, and barricades.

24. Removal of Debris, Cleaning, Etc.

The Contractor shall, periodically or as directed during the progress of the work, remove and legally dispose of all surplus excavated material and debris, and keep the Project Area and public rights of way reasonably clear.

Upon completion of the work, he shall remove all temporary construction facilities, debris and unused materials provided for work, and put the whole site of the work and public rights of way in a neat and clean condition.

25. Inspection

(a) All materials and workmanship shall be subject to inspection, examination, or test by the Owner and Architect at any and all times during manufacture or construction and at any and all places where such manufacture or construction occurs. The Owner shall have the right to reject defective material and workmanship or require its correction. Unacceptable workmanship shall be satisfactorily corrected. Rejected material shall be promptly segregated and removed from the Project Area and replaced with material of specified quality without charge. If the Contractor fails to proceed at once with the correction of rejected workmanship or defective material, the Owner may by contract or otherwise have the defects remedied or rejected materials removed from the Project Area and charge the cost of the same against any Monies which may be due the Contractor, without prejudice to any other rights or remedies of the Owner.

(b) The Contractor shall furnish promptly all materials reasonably necessary for any tests which may be required. All tests by the Owner will be performed in such manner as not to delay the work unnecessarily and will be made in accordance with the provisions of the technical specifications.

(c) The Contractor shall notify the Owner sufficiently in advance of back filling or concealing any facilities to permit proper inspection. If any facilities are concealed without approval or consent of the Owner, the Contractor shall uncover for inspection and recover such facilities at his own expense, when so requested by the Owner.

(d) Should it be considered necessary or advisable by the Owner at any time before final acceptance of the entire work to make an examination of work already completed by uncovering the same, the Contractor shall on request promptly furnish all necessary facilities, labor, and material. If such work is found to be defective in any important or essential respect, due to fault of the Contractor or his subcontractors, the Contractor shall defray all the expenses of such examination and of satisfactory reconstruction. If, however, such work is found to meet the requirements of the Contract, the actual cost of labor and material necessarily involved in the examination and replacement, shall be allowed the Contractor and he shall, in addition, if completion of the work of the entire Contract has been delayed thereby, be granted a suitable extension of time on account of the additional work involved.

(e) Inspection of materials and appurtenances to be incorporated in the improvements included in this Contract may be made at the place of production, manufacture or shipment, whenever the quantity justifies it, and such inspection and acceptance, unless otherwise stated in the technical specifications, shall be final, except as regards (l) latent defects, (2) departures from specific requirements of the Contract, (3) damage or loss in transit, or (4) fraud or such gross mistakes as amount to fraud. Subject to the requirements contained in the preceding sentence, the inspection of materials as a whole or in part will be made at the Project Site.

(f) Neither inspection, testing, approval nor acceptance of the work in whole or in part, by the Owner or its agents shall relieve the Contractor or his sureties of full responsibility for materials furnished or work performed not in strict accordance with the Contract.

26. Review by Owner

The Owner and its authorized representatives and agents shall have access to and be permitted to observe and review all work, materials, equipment, payrolls, personnel records, employment conditions, material invoices, and other relevant data and records pertaining to this Contract, provided, however that all instructions and approval with respect to the work will be given to the Contractor only by the Owner through its authorized representatives or agents.

27. Final Inspection

When the Improvements included in this Contract are substantially completed, the Contractor shall notify the Owner in writing that the work will be ready for final inspection on a definite date which shall be stated in the notice. The Owner will make the arrangements necessary to have final inspection commenced on the date stated in the notice, or as soon thereafter as is practicable.

28. Deduction for Uncorrected Work

If the Owner deems it not expedient to require the Contractor to correct work not done in accordance with the Contract Documents, an equitable deduction from the Contract Price will be made by agreement between the Contractor and the Owner and subject to settlement, in case of dispute, as herein provided.

29. Warranty of Title

No material, supplies, or equipment to be installed or furnished under this Contract shall be purchased subject to any chattel mortgage or under a conditional sale, lease-purchase or other agreement by which an interest is retained by the seller or supplier. The Contractor shall warrant good title to all materials, supplies, and equipment installed or incorporated in the work and upon completion of all work, shall deliver the same together with all improvements and appurtenances constructed or placed by him to the Owner free from any claims, liens, or charges. Neither the Contractor nor any person, firm, or corporation furnishing any material or labor for any work covered by this Contract shall have any right to a lien upon any improvement or appurtenance. Nothing contained in this paragraph, however, shall defeat or impair the right of persons furnishing materials or labor to recover under any law permitting such persons to look to funds due the Contractor in the hands of the Owner. The provisions of this paragraph shall be inserted in all subcontracts and material contracts and notice of its provisions shall be given to all persons furnishing materials for the work when no formal contract is entered into for such materials.

30. Warranty of Workmanship and Materials

Neither the final certificate of payment nor any provision in the Contract nor partial or entire use of the improvements included in this Contract by the Owner or the public shall constitute an acceptance of work not done in accordance with the Contract or relieve the Contractor of liability in respect to any express warranties or responsibility for faulty materials or workmanship. The Contractor shall promptly remedy any defects in the work and pay for any damage to other work resulting therefrom which shall appear within a period of 12 months from the date of final acceptance of the work.

31. Compliance with Air and Water Acts

(a) In compliance with the Clean Air Act, as amended, 41 U.S.C. Sec. 7401 et. seq., and the regulations of the Environmental Protection Agency with respect thereto, the Contractor agrees that:

l) Any facility to be utilized in the performance of this contract or any subcontract shall not be a facility listed on the EPA List of Violating Facilities pursuant to 40 CFR 15.20.

2) He will comply with all requirements of Section 1 14 of the Clean Air Act, as amended.

3) Materials utilized in the project shall be free of any hazardous materials, except as may be specifically provided for in the specifications.

(b) If the Contractor encounters existing material on sites owned or controlled by the Owner or in material sources that are suspected by visual observation or smell to contain hazardous materials, the Contractor shall immediately notify the Architect and the Owner. The Owner will be responsible for testing for and removal or disposition of hazardous materials on sites owned or controlled by the Owner. The Owner may suspend the work, wholly or in part during the testing, removal or disposition of hazardous materials on sites owned or controlled by the Owner.

32. Section 109 of the Housing and Community Development Act of 1974

No person in the United States shall on the ground of race, color, national origin, or sex be excluded from participation in, be denied the benefits of, or be subjected to discrimination under any program or activity funded in whole or in part with funds made available under this title.

33. The Provision of Local Training, Employment, and Business Opportunities

(a) To the greatest extent feasible opportunities for training and employment be given lower income residents of the project area and contracts for work in connection with the project be awarded to business concerns which are located in, or owned in substantial part by persons residing in the area of the project.

(b) The Contractor will include this clause in every subcontract for work in connection with the project.

34. Non-Segregated Facilities

The Contractor certifies that he does not and will not maintain or provide for his employees any segregated facilities at any of his establishments, and that he does not and will not permit his employees any segregated facilities at any of his establishments, or permit his employees to perform their services at any location, under his control, where segregated facilities are maintained. As used in this paragraph the term "segregated facilities" means any waiting rooms, work areas, rest rooms and washrooms, restaurants and other eating areas, time clocks, locker rooms and other storage or dressing areas, parking lots, drinking fountains, recreation or entertainment areas, transportation, and housing facilities provided for employees which are segregated by explicit directive or are in fact segregated on the basis of race, creed, color, or national origin, because of habit, local custom, or otherwise.

35. Job Offices

(a) The Contractor and his subcontractors may maintain such office and storage facilities on the site as are necessary for the proper conduct of the work. These shall be located so as to cause no interference to any work to be performed on the site. The Owner shall be consulted with regard to locations.

(b) Upon completion of the improvements, or as directed by the Owner, the Contractors shall remove all such temporary structures and facilities from the site, and leave the site of the work in the condition required by the contract.

36. Partial Use of Site Improvements

The Owner may give notice to the Contractor and place in use those sections of the improvements which have been completed, inspected and can be accepted as complying with the technical specifications and if in its opinion, each such section is reasonably safe, fit, and convenient for the use and accommodation for which it was intended, provided:

(a) The use of such sections of the Improvements shall in no way impede the completion of the remainder of the work by the Contractor.

(b) The Contractor shall not be responsible for any damages or maintenance costs due directly to the use of such sections.

(c) The period of guarantee stipulated in the Section 29 hereof shall not begin to run until the date of the final acceptance of all work which the Contractor is required to construct under this Contract.

37. Contract Documents and Drawings

The Local Public Agency will furnish the Contractor without charge copies of the Contract Documents, including Technical Specifications and Drawings. Additional copies requested by the Contractor will be furnished at cost.

38. Contract Period

The work to be performed under this contract shall commence within the time stipulated by the Owner in the Notice to Proceed, and shall be fully completed within 120 calendar days thereafter.

39. Keeping of Plans and Specifications Accessible

The Contractor shall keep one (l) copy of all Plans and Specifications constantly accessible at the work site and available for inspection at all times.

40. Utilities

Contractor shall be responsible for any charges which may be made by any city or utility companies for the work to be performed by Contractor.

41. Parking

Contractor shall be responsible for the expense of parking the Contractor's vehicle(s) in a legal manner and at no expense or inconvenience to the County.

42. Fire and Safety

Contractor is completely responsible for fire protection at the job site as well as the safety of its own employees as well as those entering onto the job site.

43. Contractor's Buildings

The building of structures for housing men, or the erection of tents or other forms of protection will be permitted only at such places as the County shall permit, and the sanitary conditions of the grounds in or about such structures shall at all times be maintained in the manner satisfactory to the County.

44. Worksite Security

Contractor shall maintain the security of the worksite.

Contractor shall provide adequate protection to persons on the worksite, adjacent properties, and utilities as is necessary to keep each free of damage or injury. Contractor shall furnish all barricades, warning lights and other safety devices necessary for the safety and protection of the public and shall remove them upon completion of the work performed on those premises under the terms of this contract.

Contractor will have complete control over the work site and shall be fully responsible for any loss of or damage to any County property from any cause and will reimburse County in the event of any loss or damage to County's property from any cause.

Contractor shall take proper means to protect adjacent or adjoining properties which might be injured or seriously affected by construction undertaken under this Agreement from any damage or injury by reason of said process of construction. Contractor shall be liable for any and all claims for such damage on account of its failure to fully protect all adjoining properties..

45. Final Grading

If grading is required, when work is complete, Contractor shall grade the site to fill in holes and make a presentable appearance without disturbing trees and add fill dirt if needed. Contractor may not leave voids in the grading and compaction of the property. The land shall have a smooth appearance without concrete, bricks, building materials, and other debris on the surface.

46. Changes and Alterations

Contractor further agrees that County may make such changes and alterations as County may see fit, in the line, grade, form dimensions, plans or materials for the work herein contemplated, or any part thereof, either before or after the beginning of the contract construction, without affecting the validity of this Contract and the accompanying bonds.

If such changes or alterations diminish the quantity of the work to be done, they shall not constitute the basis for a claim for damages, or anticipated profits on the work that may be dispensed with. If they increase the amount of the work, and the increased work can fairly be classified under the specifications, such increase shall be paid for according to the quantity actually done and at the unit price established for such work under this contract; otherwise such additional work shall be paid for as provided under the paragraph entitled "EXTRA WORK". In case the County shall make such changes or alterations as shall make useless any work already done or material already furnished or used in said work, then County shall recompense Contractor for any material or labor so used, and for any actual loss occasioned by such change due to actual expenses incurred in preparation for the work as originally planned.

47. Extra Work

The term "Extra Work" as used in this contract shall be understood to mean and include all work that may be required by the County to be done by Contractor to accomplish any change, alteration or addition to the work shown in the plans and specifications.

It is agreed that Contractor shall perform all Extra Work under the direction of the County when presented with a Written Work Order signed by the County. It is also agreed that the compensation to be paid Contractor for performing said Extra Work shall be determined by one or more of the following methods:

Method (a) - By agreed unit prices; or
Method (b) - By agreed lump sum: or
Method (c) - If Neither Method (a) nor Method (b) can be agreed upon before the Extra Work is commenced, then Contractor shall be paid the "Actual field cost" of the work plus fifteen (15) percent.

In the event said Extra Work be performed and paid for under Method (c), then the provisions of this paragraph shall apply and the "actual field cost" is hereby defined to include the cost of all workmen, such as foremen, timekeepers, merchants, and laborers, and materials, supplies, teams, trucks, rentals on machinery and equipment for time actually employed or used on such Extra Work plus actual transportation charges necessarily incurred, if the kind of equipment or machinery is not already on the job, together with all power, fuel, lubricants, water and similar operating expenses, also all necessary incidental expenses incurred directly on account of such Extra Work including Social Security, Old Age Benefits and other payroll taxes, and a ratable proportion of premiums on Construction and Maintenance Bonds, Public Liability and Property Damage and Workmen's Compensation, and all other insurance as may be required by any law or ordinance. The County may direct the form in which accounts of the "actual field cost" shall be kept and may also specify in writing, before the work commences, the method of doing the work and the type and kind of machinery and equipment to be used, otherwise these matters shall be determined by Contractor. Unless otherwise agreed upon, the prices for the use of machinery and equipment shall be determined by using the one hundred (100) percent of the actual hourly or daily rate (for the time used plus time in moving to and from Job) of the latest schedule of Equipment Ownership Expense adopted by the Association General Contractors of America. Where practicable the terms and prices for the use of Machinery and Equipment shall be incorporated in the

Written Extra Work Order. The fifteen (15) percent of the "Actual Field Cost" to be paid Contractor shall cover and compensate him for his profit, overhead, general superintendence and field office expense, and all other elements of cost and expense not embraced within the 'actual field cost" as herein defined, save that where the Contractor's Camp or Field Office must be maintained primarily on account of such extra work, then the cost to maintain and operate same shall be included in the "actual field cost".

No claim for extra work of any kind will be allowed unless ordered in writing by the County. In case any orders or instructions, either oral or written appear to Contractor to involve extra work for which he should receive compensation, it shall make written request to the County for written order authorizing Extra Work. Should a difference of opinion arise as to what does or does not constitute extra work, or as to the payment therefor, and the County insists upon its performance, Contractor shall proceed with the work after making written order and shall keep an accurate account of the "actual field cost" thereof, as provided under Method (c) and by this action Contractor will thereby preserve the right to submit the matter of payment to litigation.

48. Salvage

Any materials, equipment and fixtures specifically ordered to be salvaged under these specifications shall remain the property of County and will be delivered to the site designated by the County. All other items shall be disposed of by Contractor in compliance with all applicable laws and regulations.

49. Compliance with Codes

Contractor shall comply with all city, county, and state codes, laws, and ordinances in force at the time of award of contract and applicable to such work. Contractor shall obtain, at Contractor's own expense such permits, certificates, and licenses as may be required in the performance of the specified work.

50. Laws and Ordinances

Contractor shall at all times observe and comply with all Federal, State and Local Laws, ordinances and regulations which in any manner effect the contract or the work, and shall indemnify and save harmless the County against any claim arising from the violation of any such laws and ordinances, whether by Contractor or its employees.

51. Permits and Licenses

Contractor shall be responsible for obtaining and furnishing all necessary permits and licenses, City, County, State or Federal as are required for the performance of this contract.

52. Lines and Grades

The Architect will furnish points for horizontal and vertical control. Any additional stakes required by the Contractor shall be set at his expense. Whenever necessary, work shall be suspended to permit this work, but such suspension will be as brief as practicable, and the Contractor shall be allowed no extra compensation therefor. The Contractor shall give the Architect ample notice of the time and place where control lines and bench marks will be needed. All control stakes, marks, etc. shall be carefully preserved by the Contractor, and in case of careless destruction or removal by him or his employees, such control stakes, marks, etc. shall be replaced by the Archtiect at the Contractor's expense.

53. Excess, Waste Material and Debris

All excess material, waste material and debris shall become the property of the Contractor and shall be properly disposed of off-site. No separate payment shall be made for same.

54. Material Hauling

Hauling of materials will not be paid for directly, but shall be considered as subsidiary work pertaining to the respective bid items. Haul routes for full and empty loads shall be restricted to State Highways. Hauling of equipment is also restricted to State Highways.

55. Abatement and Mitigation Of Excessive Or Unnecessary Construction Noise

Throughout all phases of the construction of this project, including the moving, unloading, operating and handling of construction equipment prior to commencement of work, during the project and after the work is

complete, the contractor shall make every reasonable effort to minimize the noise imposed upon the immediate neighborhood surrounding the area of construction. Particular and special efforts shall be exercised by the Contractor to avoid the creation of unnecessary noise impacts on adjacent sensitive receptors in the placement of non-mobile equipment such as air compressors, generators, pumps, etc. The placement of temporary parked mobile equipment with the engine running shall be such as to cause the least disruption of normal adjacent activities not associated with the work to be performed by the contractor.

All equipment associated with the work shall be equipped with components designed by the manufacturer wholly or in part to suppress excessive noise and these components shall be maintained in their original operating condition considering normal depreciation. Noise-attenuation devices installed by the manufacturer such as mufflers, engine covers, insulation, etc., shall not be removed nor rendered ineffectual nor be permitted to remain off the equipment while the equipment is in use.

56. Working Hours

Work shall not be commenced by the contractor before sunrise and shall be so conducted that all equipment is off the road and safely stored by sunset. Specific permission shall be obtained by the contractor from the Architect for work during those hours between 7:00 P.M. and 6:00 A.M. of the following day.

57. Pipeline, Utility Locations and Contractor Responsibility

An effort to determine all pipelines and utilities which may impact the project has been made. All known pipelines and utilities have been approximately located and shown on the plans. The Contractor shall notify all utility and pipeline owners before beginning the work. Additional unknown utilities and pipelines may be found. Adjustments of these utilities or pipelines shall be done by others at no expense to the contractor. However, the Contractor shall cooperate and coordinate his work with the adjustment

The Contractor will anticipate this in making his bid. The contractor will not be allowed claims for damages or delays for these adjustments should they be necessary. However, additional time will be considered for the contract period.

This action, however, shall in no way be interpreted as relieving the Contractor of his responsibilities under the terms of the contract as set out in the plans and specifications. The Contractor shall repair any damage to the facilities caused by his operations at the Contractor's expense and shall restore facilities to service in a timely manner.

58. Incidentals

All items of work required under this contract not specifically called for in the proposal as pay items shall be considered incidental to the various bid items and no separate payment shall be made for same.

59. Flagmen

During certain phases of construction flagmen will be required to direct and control traffic. This work will not be paid for directly, but shall be considered incidental the various bid items and no separate payment shall be made for same.

60. Field Office

For this project the Contractor will not have to provide a field office.

61. Wage Rates:

The attached schedule of wages per hour for this Contract follow.

DOCUMENT 00201

Electrical Files Waiver, Release, and Indemnity Agreement

SECTION 00201
ELECTRONIC FILES
WAIVER, RELEASE AND INDEMNITY AGREEMENT

This form may be used when and if the Trade Contractor and Design Professional agree to allow the Trade Contractor to use electronic files belonging to the Design Professional as part of the Trade Contractor's work product. The Design Professional is under no obligation to Galveston County to provide this service to the Trade Contractor.

Whereas Brax Easterwood Design and their consulting engineers have utilized certain electronic CADD files in preparation of drawings for the Project on behalf of Galveston County, and

Whereas, _____, a Subcontractor/Contractor for _____ or

_____, a sub-tier contractor to _____ hereafter "Subcontractors" desires to obtain copies on magnetic disk of certain of Brax Easterwood Design's computer aided drafting (CADD) files consisting of construction drawings for the Project, hereinafter, "Electronic Media," and

Whereas, Brax Easterwood Design is willing to provide copies for the convenience of Subcontractors only under certain express conditions of understanding, acknowledgment and covenant as hereinafter provided without qualification.

Now therefore, Brax Easterwood Design and Subcontractors agree as follows:

1. ACKNOWLEDGEMENT AND LIMITATIONS: It is acknowledged that (1) Brax Easterwood Design
instruments of professional serves are the hard copy drawings and specifications issued by Brax Easterwood Design hereinafter "Instrument", (2) the Electronic Media are not substitutions for said Instruments, (3) differences may exist between said Instruments and the Electronic Media which Brax Easterwood Design is under no obligation to discover or disclose if known, (4) the Electronic Media may be incompatible with the Subcontractor's software and hardware configurations. In all ways, including those enumerated, Subcontractors accept the Electronic Media "as is" and Design Professional is under no obligation to correct, update for changes, enhance or maintain the Electronic Media for Subcontractors. Design Professional does not represent or warrant that the Electronic Media are complete, free from defects, or accurate now or in the future. It is acknowledged, finally, that no client relationship is created by or through this instrument between Design Professional and Subcontractors.

2. WAIVER AND RELEASE: Subcontractors agree all risk of incomplete, inaccurate, defective and variant information contained in the Electronic Media, and waives, quits, and forever discharges and releases the Owner, the Design Professional and there officers, directors, employees and successors for every claim arising out of or related to any error, discrepancy, inaccuracy, variation or other defect in the Electronic Media, whether or not resulting in whole or in part from an act, error or omission of the Design Professional and whether or not such claim is known or unknown as of the date of this waiver and release.

3. REUSE: The Electronic Media is not reusable for any other project or for additions or extensions of the project identified in the Electronic Media. Design Professional does not authorize release of the Electronic Media to any person or party other than the Subcontractors, and the Subcontractors agree and covenant not to release the Electronic Media to any other party.

4. INDEMNIFICATION: Use of the Electronic Media shall be at the sole risk of the Subcontractors and without liability or legal expense to the Owner or the Design Professional; further, Subcontractors shall, to the fullest extent permitted by law, defend, indemnify and hold the

Owner, the Design Professional and its officers, directors, employees and successors harmless from all claims, damages, including bodily injury or death, losses and expenses, including attorney fees, arising out of or resulting in whole or in part from the use of the Electronic Media.

5. DISPUTES: Due to the risk of damage, anomalies in transcription or copying and modification during use by Subcontractors where intended or otherwise, it is agreed the Design Professional's archived copy of the Electronic Media, if Design Professional chooses to maintain same shall be conclusive, unrebuttable proof in all disputes over the content of the Electronic Media furnished to Subcontractors by this Agreement.

6. COST: The Electronic Media is available to Contractor/Subcontractors for a fee of $500 per CADD file, payable to the Architect or Engineer responsible for the content of the particular CADD file. Individual sheets issued within the Contract Documents shall be considered individual CADD files.

Wherefore, the parties have signed this Release, Waiver and Indemnify Agreement on the

_____ Day of _____.

DESIGN PROFESSIONAL:

By: _____

Title: _____

Date: _____

CONTRACTOR:

_____

By: _____

Title: _____

Date: _____

SUBCONTRACTOR:

_____

By: _____

Title: _____

Date: _____

SECTION 01010
SUMMARY OF WORK

PART 1 - GENERAL

1.00 RELATED DOCUMENTS

A. Drawings and general provisions of the Contract, including General and Supplementary Conditions and other Division-1 and 2 Specification sections, apply to work of this section.

1.01 SUMMARY

A. Section Includes: general description of the work of the entire Project with any limitations or coordination with other contracts, if any.

1.02 GENERAL

A. REFER TO GENERAL CONDITIONS AND SPECIAL SUPPLEMENTARY GENERAL CONDITIONS

B. Upon completion of each phase of the work and at such times as directed, remove all surplus materials, debris, equipment, and implements from the site and leave the site in a clean, neat condition.

1.03 PROJECT DESCRIPTION

A. Briefly and without force and effect upon the contract documents, the Work of the Contract can be summarized as follows: A beach pavilion with 3 components: Service Pavilion, Trellis covered patio, and a Restroom Pavilion. The Service Pavilion is 1050 sq.ft. of conditioned area. The Trellis Patio is 1860 sq.ft. of covered exterior area. The Restroom Pavilion 650 sq.ft including a paper storage that is air conditioned of 160 sq.ft.. The facility also has paved drives and parking.

1.04 Mandatory Sequences: None

1.05 Owner Furnished and Installed Equipment: IT Cabling

1.06 Owner Furnished, Contractor Installed Equipment: None

1.07 OCCUPANCY

A. Protection of Personnel and Facilities:
   1. Provide temporary barriers or partitions as required to protect occupants of the existing building and general public from injury due to work of this project, and to protect adjacent areas of the building from spread of dust or dirt.

B. Refer to Section 01500 for construction of temporary barriers or partitions.

C. Coordination:
   1. Concurrently with the work of this Contract, other contractors, suppliers, or Owner's facilities and maintenance personnel may be working in relatively close proximity.
   2. Contractor will be responsible for coordinating their work with that of other personnel and make no claim for failure to do so.

D. Normal Working Hours:

. Normal work hours are defined as 7:00 a.m.–7:00 p.m. five days a week, Monday thru Friday.

E. Work Outside Normal Hours:
   1. Construction work outside of normal hours shall be scheduled 72 hours in advance with the Owner's Project Manager. Work Outside Normal Hours shall be subject to a maximum permissible sound level of 75 decibels (dBA), measured at the closest adjacent building.

PART 2 - PRODUCTS - NOT USED
PART 3 - EXECUTION - NOT USED

END OF SECTION

SECTION 01012

WAGE SCALE

CONDITIONS OF THE CONTRACT AND DIVISION 1, as indexed, apply to this Section.

1.1 APPLICABILITY

A. The Contract is a Public Work and is governed by V.T.C.A., Government Code, Chapter 2258. Proposers are advised that in accordance with the Act's terms, a Contractor is required to pay workers not less than the general prevailing rate of per diem wages for work of similar character in the locality in which the work is performed and not less than the general prevailing rate of per diem wages for legal holiday and overtime work. A copy of the prevailing wages to be paid in the performance of the work called for herein is attached hereto and by reference, made a part hereof. The County's determination of the General Prevailing Rate of per diem wages is final.

Prevailing wage rates determined by the United States Department of Labor in accordance with the Davis-Bacon Act (40 U.S.C. Section 276a et seq) are used in this Contract and are incorporated and made a part hereof.

In the event other crafts or types of workers are required than are listed therein, such workers shall be paid at a rate not less than the prevailing rate for similar workers in the Galveston County area.

B. Pursuant to V.T.C.A., Government Code 2258.022, a violation of the obligation to pay workers the prevailing wages shall result in the Contractor paying the County the amount of $60.00 for each worker employed for each calendar day or part of the day that the worker is paid less than the wage rates stipulated in the Contract; and.

C. Trade Contractors and Subcontractors shall be required to keep a record showing the name and occupation of each worker employed by the Contractor or Subcontractor in the construction of the work called for in the Contract and the actual per diem wages paid to each worker. The record shall be open at all reasonable hours to inspection by the officers and agents of the County.

D. Contractors and Subcontractors shall submit Certified Payroll Reports on U. S. Department of Labor forms (WH-327 or latest edition). The reports must be submitted weekly **to the Galveston County Wage Compliance Officer** by the Trade Contractor and Subcontractors. Trade Contractor's request for Payments will not be processed or checks issued until all reports are current.

E. Davis-Bacon Wage Determinations - Texas - Galveston County

```
General Decision Number: TX170298 12/01/2017  TX298

Superseded General Decision Number: TX20160298

State: Texas

Construction Type: Building

County: Galveston County in Texas.

BUILDING CONSTRUCTION PROJECTS (does not include single family
homes or apartments up to and including 4 stories).
```

Note: Under Executive Order (EO) 13658, an hourly minimum wage of $10.20 for calendar year 2017 applies to all contracts subject to the Davis-Bacon Act for which the contract is awarded (and any solicitation was issued) on or after January 1, 2015. If this contract is covered by the EO, the contractor must pay all workers in any classification listed on this wage determination at least $10.20 (or the applicable wage rate listed on this wage determination, if it is higher) for all hours spent performing on the contract in calendar year 2017. The EO minimum wage rate will be adjusted annually. Additional information on contractor requirements and worker protections under the EO is available at www.dol.gov/whd/govcontracts.

Modification Number	Publication Date
0	01/06/2017
1	01/13/2017
2	01/27/2017
3	04/14/2017
4	05/12/2017
5	08/18/2017
6	09/08/2017
7	11/03/2017
8	11/10/2017
9	12/01/2017

ASBE0022-009 06/01/2017

	Rates	Fringes
ASBESTOS WORKER/HEAT & FROST INSULATOR (Duct, Pipe and Mechanical System Insulation)....	$ 23.26	12.92

BOIL0074-003 01/01/2017

	Rates	Fringes
BOILERMAKER.....	$ 28.00	22.35

CARP0551-011 04/01/2016

	Rates	Fringes
CARPENTER (Excludes Acoustical Ceiling Installation, Drywall Finishing/Taping, Drywall Hanging, Form Work and Metal Stud Installation).....	$ 23.05	8.78

* ELEC0527-002 10/30/2017

	Rates	Fringes
ELECTRICIAN (Excludes Low Voltage Wiring and Installation of Alarms).....	$ 28.19	3% + 10.15

* ELEV0031-003 01/01/2017

```
                                   Rates          Fringes

ELEVATOR MECHANIC...............$ 39.24        29.85+a+b

FOOTNOTES:
  A. 6% under 5 years based on regular hourly rate for all
  hours worked.  8% over 5 years based on regular hourly rate
  for all hours worked.

  B. Holidays: New Year's Day; Memorial Day; Independence Day;
  Labor Day; Thanksgiving Day; Friday after Thanksgiving Day;
  Christmas Day; and Veterans Day.

-----------------------------------------------------------------
 ENGI0450-002 04/01/2014

                                   Rates          Fringes

POWER EQUIPMENT OPERATOR
     Cranes......................$ 34.85             9.85
-----------------------------------------------------------------
 IRON0084-011 06/01/2017

                                   Rates          Fringes

IRONWORKER, ORNAMENTAL..........$ 23.27             7.12
-----------------------------------------------------------------
 PAIN0130-002 06/01/2017

                                   Rates          Fringes

PAINTER (Brush, Roller, and
Drywall Finishing/Taping)........$ 17.60             8.91
-----------------------------------------------------------------
 PLAS0079-004 01/01/2015

                                   Rates          Fringes

PLASTERER.......................$ 19.92             1.00
-----------------------------------------------------------------
 PLUM0068-002 10/01/2017

                                   Rates          Fringes

PLUMBER.........................$ 34.90            10.54
-----------------------------------------------------------------
 PLUM0211-010 10/01/2017

                                   Rates          Fringes

PIPEFITTER (Including HVAC
Pipe Installation)..............$ 34.10            11.71
-----------------------------------------------------------------
 SHEE0054-012 07/01/2017

                                   Rates          Fringes

SHEET METAL WORKER
     Excludes HVAC Duct and
     Unit Installation...........$ 27.72            13.70
```

HVAC Duct Installation Only.$ 27.72 13.70

SUTX2014-024 07/21/2014

	Rates	Fringes
ACOUSTICAL CEILING MECHANIC.....	$ 16.41	3.98
BRICKLAYER.....	$ 19.86	0.00
CAULKER.....	$ 15.36	0.00
CEMENT MASON/CONCRETE FINISHER...	$ 13.82	0.00
DRYWALL HANGER AND METAL STUD INSTALLER.....	$ 17.88	5.24
ELECTRICIAN (Alarm Installation Only).....	$ 17.97	3.37
ELECTRICIAN (Low Voltage Wiring Only).....	$ 19.23	3.55
FLOOR LAYER: Carpet.....	$ 20.00	0.00
FORM WORKER.....	$ 12.07	0.00
GLAZIER.....	$ 17.09	3.41
HVAC MECHANIC (Installation of HVAC Unit Only).....	$ 17.40	0.00
IRONWORKER, REINFORCING.....	$ 12.10	0.00
IRONWORKER, STRUCTURAL.....	$ 25.37	6.00
LABORER: Common or General.....	$ 11.47	0.00
LABORER: Mason Tender - Brick...	$ 13.37	0.00
LABORER: Mason Tender - Cement/Concrete.....	$ 10.50	0.00
LABORER: Pipelayer.....	$ 12.94	0.00
LABORER: Roof Tearoff.....	$ 11.28	0.00
LABORER: Landscape and Irrigation.....	$ 9.49	0.00
LATHER.....	$ 20.11	0.00
OPERATOR: Backhoe/Excavator/Trackhoe.....	$ 14.10	0.00
OPERATOR: Bobcat/Skid Steer/Skid Loader.....	$ 13.93	0.00
OPERATOR: Bulldozer.....	$ 20.77	0.00
OPERATOR: Drill.....	$ 16.22	0.34

OPERATOR: Forklift.....$ 15.64 0.00

OPERATOR: Grader/Blade.....$ 13.37 0.00

OPERATOR: Loader.....$ 13.55 0.94

OPERATOR: Mechanic.....$ 17.52 3.33

OPERATOR: Paver (Asphalt,
Aggregate, and Concrete).....$ 16.03 0.00

OPERATOR: Roller.....$ 16.00 0.00

PAINTER: Spray (Excludes
Drywall Finishing/Taping).....$ 17.43 4.43

ROOFER.....$ 15.40 0.00

SPRINKLER FITTER (Fire
Sprinklers).....$ 18.62 3.03

TILE FINISHER.....$ 12.00 0.00

TILE SETTER.....$ 16.17 0.00

TRUCK DRIVER: 1/Single Axle
Truck.....$ 14.95 5.23

TRUCK DRIVER: Dump Truck.....$ 12.39 1.18

TRUCK DRIVER: Flatbed Truck.....$ 19.65 8.57

TRUCK DRIVER: Semi-Trailer
Truck.....$ 12.50 0.00

TRUCK DRIVER: Water Truck.....$ 12.00 4.11

WATERPROOFER.....$ 14.39 0.00

WELDERS - Receive rate prescribed for craft performing
operation to which welding is incidental.

==========

Note: Executive Order (EO) 13706, Establishing Paid Sick Leave for Federal Contractors applies to all contracts subject to the Davis-Bacon Act for which the contract is awarded (and any solicitation was issued) on or after January 1, 2017. If this contract is covered by the EO, the contractor must provide employees with 1 hour of paid sick leave for every 30 hours they work, up to 56 hours of paid sick leave each year. Employees must be permitted to use paid sick leave for their own illness, injury or other health-related needs, including preventive care; to assist a family member (or person who is like family to the employee) who is ill, injured, or has other health-related needs, including preventive care; or for reasons resulting from, or to assist a family member (or person who is like family to the employee) who is a victim of, domestic violence, sexual assault, or stalking. Additional information

on contractor requirements and worker protections under the EO is available at www.dol.gov/whd/govcontracts.

Unlisted classifications needed for work not included within the scope of the classifications listed may be added after award only as provided in the labor standards contract clauses (29CFR 5.5 (a) (1) (ii)).

The body of each wage determination lists the classification and wage rates that have been found to be prevailing for the cited type(s) of construction in the area covered by the wage determination. The classifications are listed in alphabetical order of "identifiers" that indicate whether the particular rate is a union rate (current union negotiated rate for local), a survey rate (weighted average rate) or a union average rate (weighted union average rate).

Union Rate Identifiers

A four letter classification abbreviation identifier enclosed in dotted lines beginning with characters other than "SU" or "UAVG" denotes that the union classification and rate were prevailing for that classification in the survey. Example: PLUM0198-005 07/01/2014. PLUM is an abbreviation identifier of the union which prevailed in the survey for this classification, which in this example would be Plumbers. 0198 indicates the local union number or district council number where applicable, i.e., Plumbers Local 0198. The next number, 005 in the example, is an internal number used in processing the wage determination. 07/01/2014 is the effective date of the most current negotiated rate, which in this example is July 1, 2014.

Union prevailing wage rates are updated to reflect all rate changes in the collective bargaining agreement (CBA) governing this classification and rate.

Survey Rate Identifiers

Classifications listed under the "SU" identifier indicate that no one rate prevailed for this classification in the survey and the published rate is derived by computing a weighted average rate based on all the rates reported in the survey for that classification. As this weighted average rate includes all rates reported in the survey, it may include both union and non-union rates. Example: SULA2012-007 5/13/2014. SU indicates the rates are survey rates based on a weighted average calculation of rates and are not majority rates. LA indicates the State of Louisiana. 2012 is the year of survey on which these classifications and rates are based. The next number, 007 in the example, is an internal number used in producing the wage determination. 5/13/2014 indicates the survey completion date for the classifications and rates under that identifier.

Survey wage rates are not updated and remain in effect until a new survey is conducted.

Union Average Rate Identifiers

Classification(s) listed under the UAVG identifier indicate that no single majority rate prevailed for those classifications; however, 100% of the data reported for the classifications was union data. EXAMPLE: UAVG-OH-0010 08/29/2014. UAVG indicates that the rate is a weighted union average rate. OH indicates the state. The next number, 0010 in the example, is an internal number used in producing the wage determination. 08/29/2014 indicates the survey completion date for the classifications and rates under that identifier.

A UAVG rate will be updated once a year, usually in January of each year, to reflect a weighted average of the current negotiated/CBA rate of the union locals from which the rate is based.

WAGE DETERMINATION APPEALS PROCESS

1.) Has there been an initial decision in the matter? This can be:

* an existing published wage determination
* a survey underlying a wage determination
* a Wage and Hour Division letter setting forth a position on a wage determination matter
* a conformance (additional classification and rate) ruling

On survey related matters, initial contact, including requests for summaries of surveys, should be with the Wage and Hour Regional Office for the area in which the survey was conducted because those Regional Offices have responsibility for the Davis-Bacon survey program. If the response from this initial contact is not satisfactory, then the process described in 2.) and 3.) should be followed.

With regard to any other matter not yet ripe for the formal process described here, initial contact should be with the Branch of Construction Wage Determinations. Write to:

Branch of Construction Wage Determinations
Wage and Hour Division
U.S. Department of Labor
200 Constitution Avenue, N.W.
Washington, DC 20210

2.) If the answer to the question in 1.) is yes, then an interested party (those affected by the action) can request review and reconsideration from the Wage and Hour Administrator (See 29 CFR Part 1.8 and 29 CFR Part 7). Write to:

Wage and Hour Administrator
U.S. Department of Labor
200 Constitution Avenue, N.W.
Washington, DC 20210

The request should be accompanied by a full statement of the

interested party's position and by any information (wage payment data, project description, area practice material, etc.) that the requestor considers relevant to the issue.

3.) If the decision of the Administrator is not favorable, an interested party may appeal directly to the Administrative Review Board (formerly the Wage Appeals Board). Write to:

Administrative Review Board
U.S. Department of Labor
200 Constitution Avenue, N.W.
Washington, DC 20210

4.) All decisions by the Administrative Review Board are final.

==========

END OF GENERAL DECISION

SECTION 01013

EMPLOYMENT VERIFICATION

Employment Verification

The Immigration Reform and Control Act (IRCA) of 1986 prohibit contractors from knowingly hiring illegal workers. Accordingly, Contractors and Subcontractors must collect information regarding an employee's identity and employment eligibility and document that information on Form I-9. In addition, Contractors and Subcontractors will be required to utilize E-Verify to verify that the information their employees provided was valid or that the documents presented were genuine. Contractors and Subcontractors shall also be required to keep a record on each employee showing compliance with this requirement. The records shall be open at all reasonable hours to inspection by the Galveston County Wage Compliance Officer. Each violation of this requirement shall result in the Contractor and/ or Subcontractor paying the County the amount of $60.00 for each employee employed for each calendar day or part of the day that the Contractor or Subcontractor failed to comply with the requirements of this general condition.

END OF SECTION

SECTION 01020

ALLOWANCES

CONDITIONS OF THE CONTRACT AND DIVISION 1, as indexed, apply to this Section.

PART 1 - GENERAL

A. SCOPE

1. The Contractor shall include in his proposal the allowances stated in this and following Sections of the Project Manual. Allowance may pertain to purchase and delivery only, or to purchase, delivery, and installation, or to services only, or to contingency fund.

2. In plain language the amount of money charged against an allowance will be the cost plus a percentage.
   Contractor's overhead and profit as proposed on the Proposal Form shall be added to the actual net cost in money to the Contractor of materials and labor (including insurance and applicable employment taxes required), plus rental and plant equipment (other than small tools and small equipment). (Field overhead will not be considered as part of the actual net cost). Contractor shall keep and present an itemized accounting together with appropriate supporting data for determination of the final cost.
   Refer to Section 8.04 of the agreement for additional definition.

3. If the allowance is stated for purchase and delivery only, all of the Contractor's handling costs on site and other expenses contemplated for the allowance material and equipment shall be included in the allowance.

4. If the allowance is stated for purchase, delivery, and installation, all of the Contractor's handling costs on site and other expenses contemplated for the allowance material and equipment shall be included in the allowance.

5. If the allowance is stated for services only, all of the Contractor's handling costs on site and other expenses contemplated for the services shall be included in the allowance.

6. If the allowance is stated for contingency, all of the handling costs on site and other expenses contemplated for the allowance material and equipment shall be included in the allowance.

7. The Contractor shall purchase the allowance materials and equipment as directed by the Architect in writing. If the actual cost of the required work is more or less than all the allowance estimates, the Contract Sum will be adjusted accordingly by Change Order at the conclusion of the project.

8. The Architect cannot certify applications for payment of any allowance item unless a fully executed Allowance Authorization is on file with the Owner, Architect, and Contractor.

PART 2 - ALLOWANCES

A. ITEMS

1. Contingency Allowance:
   Contractor shall include in the Base Proposal the sum listed as a contingency to cover the cost of items not shown on the Contract Documents. Contractor shall proceed with the work in question only after receiving written directions executed by the Owner and the Architect. Owner will not be obligated to pay the cost of any work performed without prior written authorization.

   Sum of Contingency Allowance..... 5% of the Base Proposal Sum

2. Testing Allowance – Testing Allowance equal to $24,000.

3. Alarm System Allowance -Allowance equal to $10,000

END OF SECTION

SECTION 01025
SCHEDULE OF VALUES

CONDITIONS OF THE CONTRACT AND DIVISION 1, as indexed, apply to this Section.

PART 1 – GENERAL

1.1 SCOPE

Provide a detailed breakdown of the agreed Contract Sum showing values allocated to each of the various parts of the work, as specified herein and in other provisions of the Contract Documents. The schedule of values is to be prepared in conformance with this section in order to assist the Architect with timely processing of all Application for Payments.

Related Work: Documents affecting work of this section include, but are not necessarily limited to, General Conditions and Sections in Division 1 of these Specifications.

1.2 SUBMITTALS

A. Prior to the first Application for Payment, submit a proposed schedule of values to the Architect, as outlined below:

1. Meet with the Architect and determine additional data, if any, required to be submitted.

2. Secure the Architect's approval of the schedule of values prior to submitting the first Application for Payment. This will allow the Architect to certify the Application for Payment in the timeliest manner.

1.3 SCHEDULE OF VALUES

The Schedule of Values shall be broken down into item costs for each specification section as labor and materials as a minimum.

A. Schedule of Values - Items in addition to Specification sections.

Mobilization
Submittals and shop drawings
Temporary Facilities
Clean Up
Building Permit
Bonds, Insurance
General Contractors Fee
Misc. Mechanical Accessories
Demolition
Rough-In Labor (Electrical, Plumbing, Mechanical)
Rough-In Material (Electrical, Plumbing, Mechanical)
Finish Labor (Electrical, Plumbing, Mechanical)
Finish Material (Electrical, Plumbing, Mechanical)
Allowances (each listed separately)
Project Close-out Documents and O&M Manuals

B. The Schedule of Values must be submitted on AIA Document G703

END OF SECTION

SECTION 01035

MODIFICATION PROCEDURES

PART 1 - GENERAL

1.1 RELATED DOCUMENTS

A. Drawings and general provisions of Contract, including General and Supplementary Conditions and other Division 1 Specification sections, apply to this section.

1.2 SUMMARY

A. This section specifies administrative and procedural requirements for handling and processing Contract modifications.

B. Related Sections: The following sections contain requirements that relate to this section:

C. Division 1 Section "Allowances" for procedural requirements governing the handling and processing of allowances.

D. Division 1 Section "Unit Prices" for administrative requirements governing use of unit prices.

E. Division 1 Section "Submittals" for requirements for the Contractor's Construction Schedule.

F. Division 1 Section "Application for Payment" for administrative procedures governing applications for payment.

G. Division 1 Section "Product Substitutions" for administrative procedures for handling requests for substitutions made after award of the Contract.

1.3 MINOR CHANGES IN THE WORK

A. Instructions authorizing minor changes in the Work, not involving an adjustment to the Contract Sum or Contract Time, will be issued by the Architect as part of a request for information on a Request for Interpretation Form as included in the Division-1 Section "Submittals".

B. Supplemental instructions authorizing minor changes in the Work, not involving an adjustment to the Contract Sum or Contract Time, will be issued by the Architect on AIA form G710, Architect's Supplemental Instructions.

1.4 CHANGE ORDER PROPOSAL REQUESTS

A. Owner-Initiated Proposal Requests: Proposed changes in the Work that will require adjustment to the Contract Sum or Contract Time will be issued by the Architect, with a detailed description of the proposed change and supplemental or revised Drawings and Specifications, if necessary.

B. Proposal requests issued by the Architect are for information only. Do not consider them an instruction either to stop work in progress, or to execute the proposed change.

C. Unless otherwise indicated in the proposal request, within 20 days of receipt of the proposal request, submit to the Architect for the Owner's review an estimate of cost necessary to execute the proposed change.

D. Include a list of quantities of products to be purchased and unit costs, along with the total amount of purchases to be made. Furnish survey data to substantiate quantities and costs on Providers' letterheads, including, but not limited to, Subcontractors' letterheads.

E. Indicate applicable taxes, delivery charges, equipment rental, and amounts of trade discounts.

F. Include a statement indicating the effect the proposed change in the Work will have on the Contract Time.

G. Contractor-Initiated Change Order Proposal Requests: When latent or other unforeseen conditions require modifications to the Contract, the Contractor may propose changes by submitting a request for a change to the Architect.

H. Include a statement outlining the reasons for the change and the effect of the change on the Work. Provide a complete description of the proposed change. Indicate the effect of the proposed change on the Contract Sum and Contract Time.

I. Include a list of quantities of products to be purchased and unit costs along with the total amount of purchases to be made. Furnish survey data to substantiate quantities and costs on Providers' letterheads, including, but not limited to, Subcontractors' letterheads.

J. Indicate applicable taxes, delivery charges, equipment rental, and amounts of trade discounts.

K. Comply with requirements in Section "Product Substitutions" if the proposed change in the Work requires the substitution of one product or system for a product or system specified.

L. Proposal Request Form: Use AIA Document G 709 for Change Order Proposal Requests.

1.5 ALLOWANCES

A. Contingency Allowance Adjustment:

1. Base each Change Order Proposal Request for an allowance cost adjustment solely on the actual purchase amount and the final measurement of work-in-place, with reasonable allowances, where applicable, for cutting losses, tolerances, mixing wastes, normal product imperfections, and similar margins.

2. Include installation costs in the purchase amount.

3. Include delivery costs in the purchase amount.

4. Include equipment rental in the purchase amount.

5. When requested, prepare explanations and documentation to substantiate the margins claimed.

6. The Owner reserves the right to establish the actual quantity of work-in-place by independent quantity survey, measure, or count.

7. Funds will be drawn from the Contingency Allowance only by Change Proposal as approved by the Owner

8. At closeout of the Contract, funds remaining in Contingency Allowance will be credited to Owner by Change Order.

9. The Contractor's overhead and profit relative to this contingency sum and work performed in accordance herewith, shall be included in the total Base Proposal price, but not included in the contingency sum. (That is, there will be no overhead and profit above what is in the
base proposal associated with the use of this allowance.)

1.6 CONSTRUCTION CHANGE DIRECTIVE

A. Construction Change Directive: When the Owner and Contractor are not in total agreement on the terms of a Change Order Proposal Request, the Architect may issue a Construction Change Directive on A1A Form G714, instructing the Contractor to proceed with a change in the Work, for subsequent inclusion in a Change Order.

B. The Construction Change Directive will contain a complete description of the change in the Work and designate the method to be followed to determine change in the Contract Sum or Contract Time.

C. Documentation: Maintain detailed records on a time and material basis of work required by the Construction Change Directive.

D. After completion of the change, submit an itemized account and supporting data necessary to substantiate cost and time adjustments to the Contract.

1.7 CHANGE ORDER PROCEDURES

A. Upon the Owner's approval of a Change Order Proposal Request, the Architect will issue a Change Order for signatures of the Owner and Contractor on AIA Form G701, as provided in the Conditions of the Contract.

PART 2 - PRODUCTS (Not Used)

PART 3 - EXECUTION (Not Used)

END OF SECTION

SECTION 01040

PROJECT COORDINATION

PART 1 - GENERAL

1.1 RELATED DOCUMENTS

A. Drawings and general provisions of Contract, including General and Supplementary Conditions and other Division-1 Specification Sections, apply to this Section.

1.2 SUMMARY

A. This Section specifies administrative and supervisory requirements necessary for Project coordination including, but not necessarily limited to:

1. Coordination.

2. Administrative and supervisory personnel.

3. General installation provisions.

4. Cleaning and protection.

B. Field engineering is included in Section "Field Engineering".

C. Progress meetings, coordination meetings and pre-installation conferences are included in Section "Project Meetings".

D. Requirements for the Contractor's Construction Schedule are included in Section "Submittals".

1.3 COORDINATION

A. Coordination: Coordinate construction activities included under various Sections of these Specifications to assure efficient and orderly installation of each part of the Work. Coordinate construction operations included under different Sections of the Specifications that are dependent upon each other for proper installation, connection, and operation.

B. Where installation of one part of the Work is dependent on installation of other components, either before or after its own installation, schedule construction activities in the sequence required to obtain the best results.

C. Where availability of space is limited, coordinate installation of different components to assure maximum accessibility for required maintenance, service and repair.

D. Make adequate provisions to accommodate items scheduled for later installation.

E. Where necessary, prepare memoranda for distribution to each party involved outlining special procedures required for coordination. Include such items as required notices, reports, and attendance at meetings.

F. Prepare similar memoranda for the Owner and separate Contractors where coordination of their Work is required

G. Administrative Procedures: Coordinate scheduling and timing of required administrative procedures with other construction activities to avoid conflicts and ensure orderly progress of the Work. Such administrative activities include, but are not limited to, the following:

1. Preparation of schedules.

2. Installation and removal of temporary facilities.

3. Delivery and processing of submittals.

4. Progress meetings.

5. Project Close-out activities.

H. Conservation: Coordinate construction activities to ensure that operations are carried out with consideration given to conservation of energy, water, and materials.

I. Salvage materials and equipment involved in performance of, but not actually incorporated in the Work. Refer to other sections for disposition of salvaged materials that are designated as Owner's property.

1.4 SUBMITTALS:

A. Submittal Schedule: Within 15 days of Notice to Proceed, Prepare and submit a submittal schedule indicating when shop drawing and submittals will be submitted by the Contractor. Coordinate the submittal schedule to address the construction sequence, long lead items, and long review items.

B. Coordination Drawings: Prepare and submit coordination Drawings where close and careful coordination is required for installation of products and materials fabricated off-site by separate entities, and where limited space availability necessitates maximum utilization of space for efficient installation of different components.

C. Show the interrelationship of components shown on separate Shop Drawings.

D. Indicate required installation sequences.

E. Comply with requirements contained in Section "Submittals."

F. Refer to Division-15 Section "Basic Mechanical Requirements and Division-16 Section "Basic Electrical Requirements" for specific coordination drawing requirements for mechanical and electrical installations.

G. Staff Names: Within 15 days of Notice to Proceed, submit a list of the Contractor's principal staff assignments, including the Superintendent and other personnel in attendance at the site; identify individuals, their duties and responsibilities; list their addresses and telephone numbers.

H. Post copies of the list in the Project meeting room, the temporary field office, and each temporary telephone.

PART 2 - PRODUCTS (Not Used)

PART 3 - EXECUTION

3.1 GENERAL INSTALLATION PROVISIONS

A. Inspection of Conditions: Require the Installer of each major component to inspect both the substrate and conditions under which Work is to be performed. Do not proceed until unsatisfactory conditions have been corrected in an acceptable manner.

B. Manufacturer's Instructions: Comply with manufacturer's installation instructions and recommendations, to the extent that those instructions and recommendations are more explicit or stringent than requirements contained in Contract Documents.

C. Inspect materials or equipment immediately upon delivery and again prior to installation. Reject damaged and defective items.

D. Provide attachment and connection devices and methods necessary for securing Work. Secure Work true to line and level. Allow for expansion and building movement.

E. Visual Effects: Provide uniform joint widths in exposed Work. Arrange joints in exposed Work to obtain the best visual effect. Refer questionable choices to the Architect for final decision.

F. Recheck measurements and dimensions, before starting each installation.

G. Install each component during weather conditions and Project status that will ensure the best possible results. Isolate each part of the completed construction from incompatible material as necessary to prevent deterioration.

H. Coordinate temporary enclosures with required inspections and tests, to minimize the necessity of uncovering completed construction for that purpose.

I. Mounting Heights: Where mounting heights are not indicated, install individual components at standard mounting heights recognized within the industry for the particular application indicated.
Refer questionable mounting height decisions to the Architect for final decision.

3.2 CLEANING AND PROTECTION

A. During handling and installation, clean and protect construction in progress and adjoining materials in place. Apply protective covering where required to ensure protection from damage or deterioration at Substantial Completion.

B. Clean and maintain completed construction as frequently as necessary through the remainder of the construction period. Adjust and lubricate operable components to ensure operability without damaging effects.

C. Limiting Exposures: Supervise construction activities to ensure that no part of the construction completed or in progress, is subject to harmful, dangerous, damaging, or otherwise deleterious exposure during the construction period. Where applicable, such exposures include, but are not limited to, the following:

1. Excessive static or dynamic loading.
2. Excessive internal or external pressures.
3. Excessively high or low temperatures.
4. Thermal shock.
5. Excessively high or low humidity.
6. Air contamination or pollution.
7. Water or ice.
8. Solvents.
9. Chemicals.
10. Light.
11. Radiation.
12. Puncture.
13. Abrasion.
14. Heavy traffic.
15. Soiling, staining and corrosion.
16. Bacteria.
17. Rodent and insect infestation.
18. Combustion.
19. Electrical current.
20. High speed operation,
21. Improper lubrication,
22. Unusual wear or other misuse.
23. Contact between incompatible materials.
24. Destructive testing.
25. Misalignment.
26. Excessive weathering.
27. Unprotected storage.
28. Improper shipping or handling.
29. Theft.
30. Vandalism.

END OF SECTION

SECTION 01092
ABBREVIATIONS AND SYMBOLS

CONDITIONS OF THE CONTRACT AND DIVISION 1, as indexed, apply to this Section.

PART 1 - GENERAL

1.1 The following is a list of typical abbreviations:

Acoustical Society of America	ASA
Adhesive & Sealant Council, Inc.	ASC
Air Conditioning & Refrigeration Institute	ARI
Aluminum Association	AA
American Association of State Highway Officials	AASHO
American Concrete Institute	ACI
American Council of Independent Laboratories	ACIL
American Hardboard Association	AHA
American Hotdip Galvanizers Association	AHGA
American Institute of Architects	AIA
American Institute of Steel Constructors	AISC
American Institute of Timber Construction	AITC
American Iron & Steel Institute	AISI
American National Standards Institute, Inc.	ANSI
American Plywood Association	PA
American Society for Testing & Material	ASTM
American Society of Civil Engineers	ASCE
American Society of Heating, Refrigeration and Air Conditioning Engineers	ASHRAE
American Society of Mechanical Engineers	ASME
American Subcontractors Association	ASA
American Welding Society	AWS
American Wood Preserver's Institute	ASPI
Architectural Aluminum Manufacturers Association	AAMA
Architectural Woodwork Institute	AWI
Asphalt Institute	AI
Associated General Contractors of America	AGC
Brick Institute of America	BIA
Building Research Institute	BRI
California Redwood Association	CRA
Chain Link Fence Manufacturers Institute	CLFM
Concrete Reinforcing Steel Institute	CRSI
Construction Specification Institute	CSI
Door and Hardware Institute	DHI
Facing Tile Institute	FTI
Federal Specifications	FS
Flat Glass Marketing Association	FGMA
Gypsum Association	GA
Hardwood Plywood Manufacturers Association	HPMA
International Conference of Building Officials	ICBO
Joint Sealer Manufacturers Association	JSMA
Maple Flooring Manufacturers Association	MFMA

Metal Lath Association	MLA
National Association of Architectural Metal Manufacturers	NAAMM
National Association of Mirror Manufacturers	NAMM
National Bureau of Lathing & Plastering	NBLP
National Clay Pipe Institute	NCPI
National Concrete Masonry Association	NCMA
National Electrical Manufacturers Association	NEMA
National Environmental Systems Contractors	NESC
National Fire Protection Association	NFPA
National Forest Products Association	NFPA
National Hardware Lumber Association	NHLA
National Ornamental Metal Manufacturers Association	NOMMA
National Paint, Varnish and Lacquer Association	NPVLA
National Ready Mixed Concrete Association	NRMCA
National Roofing Contractors Association	NRCA
National Society of Professional Engineers	NSPE
National Woodwork Manufacturers Association, Inc.	NWMA
Painting and Decorating Contractors of America	PDCA
Perlite Institute, Inc.	PI
Portland Cement Association	PCA
Resilient Floor Covering Institute	RFCI
Rubber and Vinyl Floor Council	RVFC
Southern Building Code Congress	SBC
Southern Forest Products Association	SFPA
Southern Hardwood Lumber Manufacturing Association	SHLMA
Steel Deck Institute	SDI
Steel Door Institute	SDI
Steel Joist Institute	SJI
Steel Structures Painting Council	SSPC
Tile Council of America, Inc.	TCA
Underwriter's Laboratories, Inc.	UL
Venetian Blind Institute	VBI
Vinyl Fabrics Institute	VFI
West Coast Lumber Inspection Bureau	WCLIB
Western Red Cedar Lumber Association	WRCLA
Western Wood Products Association	WWPA

END OF SECTION

SECTION 01300

SUBMITTALS

CONDITIONS OF THE CONTRACT AND DIVISION 1, as indexed, apply to this Section.

PART 1 - GENERAL

1.1 SCOPE

A. Contractor is required to provide shop drawings, submittals, or manufacturer's data to allow the Architect to review them. The Contractor may also submit request for information (RFI). All submittals will be submitted to the Architect.

B. Each project manual section has submittal requirements listed and the time required for submittal.

C. Contractor is required to list submittals as a separate item on their Schedule of Values and Application for Payment.

D. The Architect cannot certify payment to the Contractor for submittals if the submittal review process is not complete in the time frame listed in the project manual or a time frame mutually agreed by the Architect, and Owner.

1.2 PROCEDURES

A. Contractor creates shop drawings, product data, or samples as required by specific sections of the specifications. The Contractor is responsible for confirming and correcting all quantities and dimensions, selecting fabrication processes and techniques of construction, coordinating the work with that of all trades, and performing all work in a safe and satisfactory manner.

B. Apply Contractor's stamp, signed, to each item submitted, certifying that review and verification of products, field dimensions, adjacent construction work and coordination of information is in accordance with the requirements of the work and Contract Documents.

C. Contractor transmits each item to the Architect and Owner's Representative(s) with approved form identifying project, contractor, subcontractor, major supplier; identify pertinent drawing sheet and detail number and specification section number, as appropriate. Identify any deviations from Contract Documents. No deviations will be allowed without prior approval through the substitution process.

D. ALL SUBMITTALS MUST BE IN ELECTRONIC FORMAT. Electronic format is a PDF, Portable Document Format. Scan or convert documents as necessary to submit electronically

E. The Architect will not review submittals that have not been thoroughly reviewed by the Trade Contractor. If the documents have obvious errors that have not been noted by those reviews the documents will be returned to the Trade Contractor with a request to revise and resubmit from the Architect.

F. The Architect will not review submittals that have not been thoroughly reviewed by the Trade Contractor. If the documents have obvious errors that have not been noted by those reviews the documents will be returned to the Contractor with a request to revise and resubmit from the Architect. There will be no partial payments considered for submittals in the review process.

G. The Architect and/or Engineer will review the submittal for compliance with contract documents and notify the Contractor that the submittal is ready to be picked up.

H. The Contractor will notify the Trade Contractor that the review has been completed and the submittal may be picked up.

I. The Contractor will retain 1 physical copy of the submittals on site. The Architect will retain electronic copy of the submittal. The Engineers will retain an electronic copy of any submittals that they are required to review.

J. Contractor will revise and resubmit submittals requested to be revised and resubmitted. He will identify all changes made since the previous submittal. The process will then start over. The Architect will not certify applications for payment of submittals that are in the review process.

K. The Architect is not obligated to review submittals that are requested to be revised and resubmitted a second time and may request additional funding from the Owner to do so. The Architect may request that the Owner claim the expense of repeated re-submittals to the Architect from the Trade Contractor for submittals resubmitted more than once.

L. Note that most submittals are required within a short period of time of signing the contract. Refer to the specification Section to determine the exact time.

1.3 SHOP DRAWINGS AND PRODUCT DATA

A. Provide an copy to be retained for the Architect, and Owner's files and any number required for the Contractor to complete his work.

B. Manufacturer's Instructions:
When work is specified to comply with manufacturer's printed instructions, obtain and distribute copies of such instructions to parties involved in the installation, at least two weeks prior to start of such work.

C. All dimensions indicated on the drawings are based on the specific models and manufacturers of products, equipment, fixtures and miscellaneous items specified. If the Contractor uses an approved product by another listed manufacturer which is different than the specific model and manufacturer listed in these specifications, then the Contractor shall be solely responsible for the coordination of any dimensional changes required, including structural, relocation of walls, equipment, fixtures, ceilings and miscellaneous items. When dimensional changes are required in these situations, the Contractor shall submit a proposed modification drawing to the Architect for review prior to proceeding with the work. All causes and effects of the dimensional change shall be indicated on the Contractor's drawing submittal.

1.4 SAMPLES

A. Submit a full range of requested manufacturer's colors, textures, and patterns for Architect's selection. Submit samples for selection of finishes in accordance with approved schedule, and in such sequence as to cause no delay in the work or in the work of any other Contractor.

B. Submit samples to illustrate functional characteristics of the product, with integral parts and attachment devices. Coordinate submittal of different categories for interfacing work.

C. Submittals shall contain:
   1. Date of submission and dates of any previous submissions
   2. Project title and number
   3. Contract identification
   4. Names of Contractor, Supplier, Manufacturer
   5. Identification of sample, with specification section number

D. Resubmission Requirements for Samples:
   1. Make any corrections or changes in the submittals required by the Architect and resubmit until approved. Refer to paragraph 1.2.I above.
   2. Submit new samples as required for initial submittal.

E. Submit the number specified in the respective Specification section; minimum of two, one will be retained by Architect. Reviewed samples may be used in the work if so indicated in the specification section.

1.5 MANUFACTURER'S CERTIFICATES AND WARRANTIES

A. Submit required certificates and warranties in duplicate.

END OF SECTION

SECTION 01310

CONSTRUCTION SCHEDULE

CONDITIONS OF THE CONTRACT AND DIVISION 1, as indexed, apply to this Section.

PART 1 - GENERAL

1.1 SCOPE

A. The construction schedule is of critical importance to Galveston County.

B. Immediately after award of a contract the Owner and Architect will work with each Contractor on the project to develop a critical path schedule. The Contractor is required to participate in and cooperate with this effort and to comply with the developed schedule.

C. The Contractor shall coordinate his schedule with the Owner and Architect so that the entire work proceeds smoothly and without interruption. Refer to Article 2 of the Contract for Construction.

D. The Contractor shall start the work upon notice to proceed and shall execute the work with diligence and dispatch so as to maintain such schedules and milestones as established in cooperation with the Owner and Architect.

E. Galveston County does not have any restrictions on the days or hours of work that are allowed or required to comply with the schedule except that the Contractor's Project Manager, Project Superintendent, or designated representative must be present whenever a Contractor is performing work on the project.

F. The Contractor shall report progress critical to maintaining the schedule at the bi-weekly project meeting held by the Architect.

G. If it is determined by the Architect that the Contractor is falling behind schedule he will notify the Contractor at the bi-weekly meeting and the Contractor must provide a plan of action to maintain the previously agreed schedule.

H. The Contractor is cautioned that schedules and milestones are subject to review and revision, and in such event, such revisions will be made available for the Contractor's information at the jobsite office of the Construction Manager.

I. It is the responsibility of the Contractor to attend regular project meetings, keep itself informed of any revisions to the schedule, and conform to any such revisions to the schedule.

END OF SECTION

SECTION 01410

TESTING LABORATORY SERVICES

CONDITIONS OF THE CONTRACT AND DIVISION 1, as indexed, apply to this Section.

PART 1 - GENERAL

1.1 SCOPE

A. The Contractor shall allow in his proposal the coordination and supervision of tests to be performed by an independent laboratory selected by the Owner.
B. All testing laboratory services shall be provided and paid for by the Owner outside of this Contract or by allowance amount inside this Contract. The Owner will select a material testing lab and notify the Contractor as soon as possible.
C. The Owner will pay for the initial testing laboratory services of materials that comply with the requirements of the contract documents. If the materials tested do not comply with the requirements of the contract documents the Contractor shall be required to replace those materials, unless the Owner exercises their option to accept the work under Article 12.3 – Acceptance of Non-Conforming Work, and pay for all testing of replacement materials. Refer to Article 12 – Uncovering and Correction of Work in the General Conditions.
D. The Contractor shall cooperate with the testing laboratory in all matters pertaining to the work. The Owner retains the option to add to or delete any or all testing specified herein.

1.2 REQUIREMENTS

A. Conditions of the Contract: Inspections and testing required by laws, ordinances, rules, regulations, orders, approvals, or public authorities.
B. Respective Sections of Specifications: Certification of products.
C. Each Specification Section Listed: Laboratory test required and standards for testing.
D. Testing laboratory inspection, sampling and testing is required for:
   01 Section 02220 - Earthwork
   02 Section 02220 - Trenching and Backfilling
   03 Section 02335 - Soil Stabilization
   04 Section 03001 - Cast-In-Place Concrete
   05 As requested by the Owner or Architect

1.3 AUTHORITIES AND DUTIES OF THE LABORATORY

A. The laboratory is not authorized to revoke, alter, relax, enlarge, or release any requirement of the Specifications, or to approve or accept any portion of the work. When it appears that the material furnished or work performed by the Contractor fails to fulfill specification requirements, the testing laboratory shall promptly notify the Contractor, Construction manager, Architect, supplier and/or subcontractor providing or preparing the materials or work being tested of such deficiencies.
B. The laboratory shall promptly distribute copies of the laboratory test and inspection reports. Standard distribution shall include copies of all reports to the Owner, Architect, and Contractor. The structural engineer, civil engineer, MEP engineer,

concrete supplier, and any outside consultants shall receive copies of the testing results regarding their particular phase of the project.

1.4 TESTING LABORATORY GUIDELINES AND PROCEDURES

A. Technicians scheduled to perform specific testing services must be qualified to review and perform other services that overlap (i.e., earthwork, foundation inspections, rebar inspection, and concrete), when scheduled concurrently at the project site.

B. Technician time for services performed will be reimbursed at a regular time rate. Compensation at the overtime rate will be considered for any hours over eight hours spent at the job site on a single day, field testing services performed on a Saturday or Sunday, and any field services performed on a recognized holiday.

C. Concrete design mixes will receive a cursory review with any discrepancies reported to the Architect. No compensation will be considered for these reviews.

D. Nuclear density testing will be based on a daily rental rate for the actual testing equipment; compensation on a per test basis will not be considered.

E. Report distribution shall include the Owner, Architect, Contractor, Civil Engineer, Structural Engineer, and others requesting or requiring review of the specific testing results.

F. There will be a three-hour minimum for each scheduled testing service. Vehicle charges will be included on a $25.00 per trip basis.

G. Cylinder pick-up will be handled by the technician performing the test on a scheduled pick-up day. If there are no testing services scheduled, the cylinder pick-up fee will be $40.00 on week days, and $50.00 on weekends and holidays, with no technician time or vehicle charge.

H. Structural steel inspections shall include a plant visit reviewing shop fabrication, welding and an overall review of the shop fabrication quality control standards. Structural steel field inspection shall include a 100% visual review of all field fillet welds and initial frequency of 25% ultrasonic testing of full field penetration welds. There shall be 100% visual review of all bolted connections, and a minimum of two (2) bolts tested at every bolted connection.

I. The Contractor shall bear the responsibility of scheduling all testing services. The Contractor and the testing laboratory shall assume full responsibility to coordinate the testing services. Cancellations and/or failed tests will be reimbursable to the Owner by the responsible party for the cancellation or failure of a test or service.

1.5 TESTS CONDUCTED

A. Earthwork:

02 Select earth fill and fill under building slabs and paving.

a. Proctor curve for one type of fill material. If the original choice of material does not meet the specifications, the Contractor shall pay for additional testing.

b. In place density test for each 500 square yards of compacted new fill material, ASTM D2922 or AASHTO T99.

c. Liquid limit of fill material, ASTM D423 or AASHTO T89.

d. Plastic limit and plasticity index of all fill material, ASTM D424 or AASHTO T90 and T91.

B. Cast-In-Place Concrete:

01 Design concrete mixes and test aggregates proposed for use therein.

02 Determine the quality of the concrete as outlined in ASTM C-L143.

03 Provide full time services for the review of all drilled pier foundation inspections. Including a daily report noting grid lines and locations of each pier drilled. After the foundation shaft has been drilled, the lab shall test an undisturbed sample and verify that it meets or exceeds the design specification.

04 Provide full-time services for all structural building concrete drilled piers, grade beams, slab on grade, columns, and other miscellaneous structural concrete. Included within this scope of work is the review of all the rebar placement, size, spacing of stirrups, and miscellaneous placement requirements.

05 Cast two (2) concrete cylinders for every 50 cubic yards of structural concrete for compressive strength testing. Cast three (3) concrete cylinders for every 100 cubic yards of building slab and concrete paving for compressive strength testing.

06 Reference: American Society for Testing and Materials ASTM C143, Slump of Portland Cement Concrete

END OF SECTION

SECTION 01420

NOTIFICATION OF ARCHITECT REQUIREMENTS

CONDITIONS OF THE CONTRACT AND DIVISION 1, as indexed, apply to this Section.

PART 1 - GENERAL

1.1 SCOPE

A. Contractor is required to coordinate his activities with the Architect by notifying the Architect/Engineer of necessary scheduling. This will allow the project to proceed smoothly and without interruption. The Architect and Consulting Engineers generally require 48 hours notice to plan their work and will be appreciative of your cooperation.

B. In general, the Contractor shall notify the Architect whenever there is need of clarification or interpretation of the Contract Documents. This may be done without notice however, the Architect and/or Engineer may not be available immediately so plan ahead.

C. The Contractor shall notify the Architect 48 hours in advance of certain stages of construction. The Contractors' Project Superintendent shall notify the Owner and Architect on a regular basis of the ongoing work. These stages shall include, but not necessarily be limited to the following:

1. 02200, 22 00 00, 26 00 00 - Inspection and covering of any underground utilities
2. 03001 - Placing of all concrete
3. 04200 - Installation of masonry
4. 05500 - Erection of Structural Steel
5. 07100 - Concealment of flashing
6. 07210 - Concealment of insulation
7. 07500 - Roofing and sheet metal work
8. 07900, 08800 - Installation of building and glazing sealants
9. 09510 - Installation of ceiling grid
10. 09900 - Painting and staining (each coat)
11. 09300 - Installation of flooring
12. 22 00 00, 26 00 00 - Completion of roughing-in of plumbing, heating, air conditioning and electrical work (prior to concealment)
13. 26 00 00 - Installation of all electrical fixtures
14. 22 00 00 - Installation of heating, ventilating and air conditioning
15. 22 00 00 - Installation of plumbing fixtures
16. 22 00 00, 26 00 00 - Any and all testing specified for equipment, mechanical, electrical and plumbing systems

PART 2 - PROJECT MEETINGS

2.1 PRECONSTRUCTION CONFERENCE

A. The Trade Contractor shall contact the Owner and Architect at least ten (10) days prior to commencing construction, in order to schedule a pre-construction meeting with the Architect and Owner. This meeting must occur prior to commencement of any construction.

2.2 PROGRESS MEETINGS

A. The Architect shall schedule and administer project meetings throughout progress of the work.
B. The Architect will make physical arrangements for meetings, preside at meetings, record minutes, and distribute copies within two (2) days to the Architect, participants, and those affected by decisions made at meetings.
C. Required Attendance: Contractor's Project Superintendent, Contractor's Project Manager, Contractor's Project Coordinator, Owner, Engineer and Architect as appropriate to agenda topics for each meeting.
D. Suggested Agenda: Review of work progress, status of progress schedule and adjustments thereto, delivery schedules, submittals, maintenance of quality standards, pending changes and substitutions, and other items affecting progress of work. This is a good time to review the upcoming Application for Payment.

2.3 PREINSTALLATION CONFERENCES

A. For each individual Specification section or each subcontractor, convene a pre-installation conference prior to commencing work of that Section.
B. Require attendance of entities directly affecting or affected by work of that section.
C. Review conditions of installation, preparation and installation procedures, and coordinate with related work.

END OF SECTION

SECTION 01500

TEMPORARY FACILITIES AND CONTROLS

CONDITIONS OF THE CONTRACT AND DIVISION 1, as indexed, apply to this Section.

PART 1 - GENERAL

1.1 QUALITY ASSURANCE

A. Environmental Protection: Provide environmental protection as required by authorities having jurisdiction and as indicated in Contract Documents.

1.2 GENERAL TRADE CONTRACTOR REQUIREMENTS

Each Trade Contractor shall be responsible for furnishing, installing or otherwise providing any or all of the following temporary facilities, structures or services as they may be necessary or required for or during, performance of the work of his Contract.

1. Temporary field office facilities complete, including all furniture, heat, cooling, lighting, telephone, plumbing and toilet fixtures as he may require for his exclusive use. (Site location and number are subject to approval of the Owner).

2. Temporary storage facilities, sheds or buildings as may be required for the proper protection or storage of materials and/or equipment. (Site location and number are subject to approval of Owner).

3. Temporary extension from, and hookup to, all temporary utilities which have been provided to a common point for use by the Trade Contractors during construction.

4. Maintenance, cleanup and removal of all temporary facilities provided by the Trade Contractor for his exclusive use.

5. Temporary drainage and dewatering measures including all pumping, drainage, erosion control or other work required to protect the work of the Trade Contractor while in progress.

6. All temporary facilities, structures, services or items of work specifically required or defined in the Scope of Work of the Contract (Proposal Package) or otherwise required by the Contract Documents for his work.

7. Distribution of drinking water for his construction personnel.

8. At the end of the day's work, all work subject to damage by adverse weather conditions shall be covered or otherwise protected as required. Weather protection shall be adequate to permit each Trade Contractor to work on a continuous basis without shutdown due to temperature or weather conditions as far as possible.

9. No temporary service shall be removed or disconnected until the new parts have been installed to replace them, properly connected and ready

for use. The changing over from temporary to permanent work shall be done expeditiously, and if possible so that no part of the building or premises shall be without adequate service. If this is not possible, the procedure must be planned and submitted to the Owner or Architect for approval.

1.3 **TEMPORARY ELECTRICITY AND LIGHTING**Owner will pay cost of energy used directly to utility and provide temporary electric service. Exercise measures to conserve energy.

B. Electric power for use in temporary trailers shall be available to the Trade Contractor from a central location in the trailer area. The Trade Contractor shall furnish any required extensions from this location at his own expense

C. All contractors must share the system provided and average usage is anticipated. If additional distribution is required and available at the control service, it will be provided at the Trade Contractor's expense.

D. Connecting and disconnecting Trade Contractor tools and equipment to (and from) the above distribution system will be performed by qualified personnel, ALL grounding as required by the National Electrical Code, OSHA or any and all local codes, including approved ground fault interrupters shall be furnished and installed at the Trade Contractors expense.

E. The Electric Contract will install temporary lighting as needed to perform work once the building is erected. Temporary lighting shall be a minimum of 2 watt per square foot. For all areas 3,200 or less, 100-watt lamps spaced approximately at 20 foot centers shall be used. Any temporary lighting required beyond the foregoing shall be provided by the party requiring the same and the work will be paid for by the Trade Contractor.

F. The electric service and distribution provided by the Electric Contract includes:

1. The central service will be installed from the Utility Company's service point to the central distribution point on-site. Distribution from this point to the central connection point in the trailer area will be installed including any transformers, main disconnected switch or switches, any metering, supports, protective enclosure and grounding.

2. Service will terminate in a panel board equipped with circuit breakers. Service characteristics available will be 120/208 volts, three phase, 4 wire web, unless otherwise specified. Total capacity to be shared shall be 400 amps. Use of electricity for basic heating of trailers will not be allowed.

3. The distribution will be extended in the building at one designated distribution point. This distribution location will provide:

   a. Panel board for breakers for lighting and hand tool circuits throughout the area served.

   b. Panel board and breakers for twenty (20) 20 amp circuits for connection of bench tools, such as, pipe threaders, etc.

1.4 TEMPORARY HEATING

A. It is not anticipated that the permanent building system will be utilized to provide "temporary heat" during the major portion of construction operations.

B. Within these parameters the Trade Contractor must provide any supplemental heat required to perform his work

C. Maintain minimum ambient temperature of 50 degrees F in areas where construction is in progress, unless indicated otherwise in product sections.

D. It is anticipated that activation, testing and balancing of the building heating/cooling system will be critical to the completion and acceptance of the project and therefore actuation, of the permanent system will be scheduled for the earliest possible time

1.5 TEMPORARY COOLING

A. Will not be provided.

B. It is anticipated that activation, testing and balancing of the building heating/cooling system will be critical to the completion and acceptance of the project and therefore actuation, of the permanent system will be scheduled for the earliest possible time

1.6 TEMPORARY VENTILATION

A. Ventilate enclosed areas after building erection to achieve curing of materials, to dissipate humidity, and to prevent accumulation of dust, fumes, vapors, or gases.

1.7 TELEPHONE SERVICE

A. Provide, maintain, and pay for land or mobile telephone service to field office at time of project mobilization.

1.8 TEMPORARY WATER SERVICE

A. Owner will pay cost of temporary water. Exercise measures to conserve energy. Utilize Owner's existing water system, extend and supplement with temporary devices as needed to maintain specified conditions for construction operations.

B. Extend branch piping with outlets located so water is available by hoses with threaded connections. Provide temporary pipe insulation to prevent freezing.

C. Potable water shall be available to the Trade Contractor at a central location. Extensions of the water supply for Trade Contractor's exclusive use shall be the responsibility of the Trade Contractor.

All Trade Contractors are responsible for providing their own hoses to bring water from the hose rack location to their work **areas**. Only heavy-duty 3/4" hose in good conditions will be permitted in use in the interior of the building. The discharge end of each hose shall be equipped with a means of positive shut off. The use of hoses, which leak at connections or elsewhere throughout their

length, will not be permitted. All hoses shall be disconnected from hose bibs when not in use and before the end of each work day.

1.9 TEMPORARY SANITARY FACILITIES

A. The Contractor will provide temporary toilets, excluding Trade Contractor's trailer hookup.

B. The Contractor will provide rubbish containers and rubbish disposal service unless noted otherwise. The Contractor must not use these containers for the disposal of earth, surplus or slop concrete, hazardous materials, and/or steel stock. The Contractor must dispose of these elements and construction waste at his own expense.

1.10 FIELD OFFICES AND SHEDS

A. Designated existing spaces may be used for field offices and for storage:

B. Owner will provide space for Project meetings, with table and chairs to accommodate 10 people.

C. Storage Areas and Sheds: Size to storage requirements for products of individual Sections, allowing for access and orderly provision for maintenance and for inspection of products to requirements of Section 01600.

D. Maintenance and Cleaning: Daily removal of construction waste and rubbish. Maintain approach walks free of mud, water, and snow.

1.11 VEHICULAR ACCESS

A. Provide unimpeded access for emergency vehicles. Maintain 20-foot width driveways with turning space between and around combustible materials.

B. Provide and maintain access to fire hydrants and control valves

1.12 PARKING

A. Use of designated existing on-site streets and driveways used for construction traffic is permitted. Tracked vehicles not allowed on paved areas.

B. Construction personnel are permitted to use the existing parking facilities adjacent to the site near Noble Carl Drive.

C. Do not allow heavy vehicles or construction equipment in parking areas.

D. Maintenance:

1. Maintain traffic and parking areas in a sound condition free of excavated material, construction equipment, products, mud, snow, and ice.

2. Maintain existing and permanent paved areas used for construction; promptly repair breaks, potholes, low areas, standing water, and other

deficiencies, to maintain paving and drainage in original, or specified, condition.

E. Removal, Repair:

1. Repair existing parking facilities damaged by use, to original condition.

1.13 PROGRESS CLEANING AND WASTE REMOVAL

A. Salvage nonhazardous demolition and construction waste and recycle.

B. **Maintain areas free of waste materials, debris, and rubbish <u>on a daily basis</u>. Maintain site in a clean and orderly condition <u>on a daily basis</u>.**

C. Remove debris and rubbish from pipe chases, plenums, attics, crawl spaces, and other closed or remote spaces, **<u>on a daily basis</u>** and prior to enclosing the space.

D. Broom and vacuum clean interior areas prior to start of surface finishing, and continue cleaning to eliminate dust.

E. **Collect and remove waste materials, debris, and rubbish from site daily and dispose off-site.**

1.14 TRAFFIC REGULATION

A. Signs, Signals, And Devices:

1. Post Mounted and Wall Mounted Traffic Control and Informational Signs: As approved by local jurisdictions.

2. Automatic Traffic Control Signals: As approved by local jurisdictions.

3. Traffic Cones and Drums, Flares and Lights: As approved by local jurisdictions.

4. Flag-person Equipment: As required by local jurisdictions.

B. Flag Persons: Provide trained and equipped flag persons to regulate traffic when construction operations or traffic encroach on public traffic lanes.

C. Flares and Lights: Use flares and lights during hours of low visibility to delineate traffic lanes and to guide traffic.

D. Haul Routes: Consult with authority having jurisdiction, establish public thoroughfares to be used for haul routes and site access.

1.15 BARRIERS

A. the Contractor shall provide barriers to prevent unauthorized entry to construction areas to allow for authorized use of site, and to protect existing facilities and adjacent properties from damage from construction operations and demolition.

B. Protect non-owned vehicular traffic, stored materials, site, and structures from damage.

1.16 **ENCLOSURES AND FENCING**

A. The Contractor will provide fence around construction site; equipped with vehicular and pedestrian gates with locks.

1.17 **SECURITY**

A. Security Program:

1. Protect work, existing premises, and Owner's operations from theft, vandalism, and unauthorized entry.

2. Maintain program throughout construction period until Owner acceptance precludes the need for Contractor security.

B. Entry Control:

1. Restrict entrance of persons and vehicles into Project site and existing facilities.

2. Allow entrance only to authorized persons with proper identification.

3. Maintain log of workers and visitors, make available to Owner on request.

4. Coordinate access of Owner's personnel to site in coordination with Owner's security forces.

C. Personnel Identification:

1. Provide identification badge to each person authorized to enter premises.

2. Badge To Include: Personal photograph, name and employer.

3. Maintain a list of accredited persons, submit copy to Owner on request.

4. Require return of badges at expiration of their employment on the Work.

D. Restrictions:

1. Do not allow cameras on site or photographs taken except by written approval of Owner.

2. The Contractor will provide temporary fire safety equipment for general use. Each Trade Contractor shall provide their own fire extinguishers for their trailers, and for use, as required when cutting and burning are performed

E. Site Security, Personnel and Property Protection

1. Contractor shall maintain the security of the worksite and shall restrict

access to the site to the following:

a. its employees;

b. employees of subcontractors;

c. representatives of manufacturers whose goods are utilized in the work and are called to the site by either the Contractor or the Program Administrator; and

d. agents and/or employees of the County.

2. Contractor shall provide adequate protection to persons on the worksite, adjacent properties, and utilities as is necessary to keep each free of damage or injury.

3. Contractor shall take proper means to protect adjacent or adjoining properties which might be affected by construction undertaken under this Agreement from any damage or injury by reason of said process of construction. Contractor shall be liable for any and all claims for such damage on account of its failure to fully protect all adjoining properties.

4. At no time remove, alter or render ineffective any barricades, railings or cover on the project. Where these safety devices are to be turned over to others, upon completion of the work, the devices shall be repaired or replaced so that they meet the required standards prior to turnover.

5. When performing any cutting, removal, creating opening or holes, etc., the Contractor, by use of barricades, flagmen, or other means, shall provide protective measures to assure that other workmen or the public are not exposed to potential injury by the operation being conducted.

6. The Contractor shall be responsible for handling and transporting (including lifting) his material and equipment to the location of need in a timely manner.

7. Any vertical lifting device, whether stationary material hoist, mobile crane or other means, a Contractor plans to use will be implemented only at the risk to the Contractor.

1.18 DUST CONTROL

A. Execute Work by methods to minimize raising dust from construction operations.

B. Provide positive means to prevent air-borne dust from dispersing into atmosphere.

1.19 NOISE CONTROL

A. Provide methods, means, and facilities to minimize noise produced by construction operations.

1.20 POLLUTION CONTROL

A. Provide methods, means, and facilities to prevent contamination of soil, water, and atmosphere from discharge of noxious, toxic substances, and pollutants produced by construction operations.

1.21 HOUSEKEEPING - CLEANING AND RUBBISH REMOVAL

A. **Each Trade Contractor shall be responsible for daily and final cleanup and continuous removal of all rubbish and debris from the building and site.** The Contractor shall provide, erect, locate, and maintain a rubbish collection dumpster system for use of all trades. Each Trade Contractor shall be responsible to deposit his daily rubbish into these dumpster locations as designated and provided by the Contractor. Failure of a Trade Contractor to do so will require that this be done by the General Contractor after proper notice to the Trade Contractor at no expense to the Owner.

B. The jobsite shall be maintained in a neat orderly condition and kept free from accumulations of waste materials and rubbish during the entire construction period. Trade Contractor will remove all crates, cartons and other flammable waste materials or trash from the work areas at the end of each working day.

C. Elevator shafts, electrical closets, pipe and duct shafts, chases, furred spaces and similar spaces which are generally unfinished, shall be cleaned and left free from rubbish, loose plaster, mortar drippings, extraneous construction materials, dirt and dust before substantial completion review.

D. Each Trade Contractor shall be responsible for cleaning all surfaces as necessary to make them free of spatters or other deposits of paint, plaster, mortar, concrete, adhesives, roofing, dirt, soil, oil, or any other material foreign to the surface involved. Failure of a Trade Contractor to do so will require that this be done by the General Contractor after proper notice to the Trade Contractor at no expense to the Owner.

E. Each Trade Contractor is responsible to share the task of litter.

F. However, to insure proper cleanup, notwithstanding the Trade Contractor's obligations to cleanup any debris resulting from his own operations, and following proper notices the Contractor will undertake the cleanup and disposal of litter and other debris whose source is unidentifiable at no expense to the Owner.

G. The Contractor shall be responsible to maintain his own trailer, storage and work areas in a sanitary condition to minimize the hazard of attracting vermin and breeding mosquitoes. Rodent extermination materials shall be those approved by the local health department or other agency having jurisdiction.

H. Use only cleaning materials and methods recommended by manufacturer of surface to be cleaned. Use cleaning materials only on surfaces recommended by cleaning material manufacturer. Each Trade Contractor shall be responsible for assuring that affected employees are provided with, and required to use, all needed personal protective devices in connection with cleaning.

I. At completion of work, each Trade Contractor shall remove tools, equipment, machinery, and surplus materials from the project site and perform whatever

additional cleaning is specified in the Proposal Form.

B. Vehicle cleaning - Trucking

1. The Contractor/Construction Manager (on the Site Utilization Plan) will designate the wash-down area to be utilized by the Trade Contractors. The "wheel wash station" will be equipped with a hose connection and drainage area. The Trade Contractor shall provide manpower, hose and other supplemental scrapers, brushes, etc., which may be required to satisfactorily clean his vehicles leaving the site. The construction of this temporary facility may be included in the "Scope of Work" of the excavation or site Preparation Proposal Package, Review scope of work carefully.

2. All vehicles shall be cleaned of all mud and debris before leaving the site. Each Trade Contractor shall be responsible for providing whatever personnel may be required to perform the required vehicle cleaning throughout the progress of their work. The wash-down area shall not be used for cleaning out of concrete mix trucks.

3. Cleaning of concrete equipment shall be performed at locations designated by the Construction Manager. Cleaning shall be conducted in such a manner as to prevent spillage of fluid or concrete to the ground or penetration of existing ground soil. The responsible Trade Contractor shall remove from the site all residues accumulated from the cleaning operations of concrete equipment.

4. All trucks leaving the site with earthen materials or loose debris shall be loaded in a manner that will prevent dropping of materials on streets, and when necessary, shall have suitable coverings fastened over the load before they enter surrounding paved streets. Trucks bringing earthen materials over paved streets to the site shall be similarly loaded and covered. The Trade Contractor shall conform to all local regulations regarding load limits and be responsible for any costs due to failure to comply with the above.

1.22 REMOVAL OF UTILITIES, FACILITIES, AND CONTROLS

5. Remove temporary utilities, equipment, facilities, materials, prior to Substantial Completion inspection.

6. Remove underground installations to a min. depth of 2 feet. Grade site.

7. Clean and repair damage caused by installation or use of temporary work.

8. Restore existing and permanent facilities used during construction to original condition. Restore permanent facilities used during construction to specified condition.

END OF SECTION

SECTION 01630

SUBSTITUTIONS

CONDITIONS OF THE CONTRACT AND DIVISION 1, as indexed, apply to this Section

PART 1 – GENERAL

1.1 SCOPE

A. Comply with all requirements of the Contract Documents, including, but not limited to, specified sizes, dimensions, materials, finishes, products, manufacturers, suppliers, brands, processes, procedures, tolerances, sequences, etc.

B. If, for some reason, all the multiple requirements cannot be met and the Bidder/proposer wishes to request a substitution of products in place of those specified, the Bidder/proposer or Contractor may make a formal request to the Architect for consideration.

C. Substitution of products considered and accepted by the Owner and Architect will be included in addenda prior to the proposal date. Request must be made at least ten (10) days prior to the proposal date to be included in addenda.

1.2 BIDDER/PROPOSER or CONTRACTOR

A. By making requests for substitutions the Bidder/proposer represents that he has personally investigated the proposed substitute product and determined that it is equal or superior in all respects to that specified.

B. The Bidder/proposer represents that the Contractor will provide the same warranty for the substitute product that the Contractor would have provided for the specified product.

C. The Bidder/proposer certifies that the cost data presented is complete and includes all related costs under this Contract except the Architect's redesign cost and waives all claims for additional costs related to the substitution that subsequently become apparent.

D. The Bidder/proposer will coordinate the installation of the accepted substitute, make such changes as may be required for the Work to be completed in all respects.

E. The Bidder/proposer will notify the Architect of any space accommodations required by a substitution.

F. The Bidder/proposer will notify the Architect of any known disadvantage as compared to the specified item.

G. The Bidder/proposer will submit justifying data on which the Architect can base a decision.

1.3 ARCHITECTS DUTIES AND RESPONSIBILITIES

A. The Architect has no obligation to entertain any proposed substitution unless the Contract cannot be fulfilled under the original requirements.

B. The Architect will analyze only proposed substitutions that he perceives likely to benefit the Owner by lower costs, improved quality or saving time.

1.4 PROPOSED SUBSTITUTIONS DURING PROPOSAL PERIOD

A. Request must be submitted to the Architect in sufficient time before the proposal date to permit evaluation and notifying Bidder/proposers, if approved. This time is a minimum of ten (10) day prior to proposal date.

B. Substitutions, if approved, will be by written Addenda to all Bidder/proposers. No oral, telephonic, or other method will be used to acknowledge accepted substitutions. If it is not in an addenda it is not acceptable to include it in a proposal.

1.5 PROPOSED SUBSTITUTIONS AFTER CONTRACT AWARD

A. Must be submitted so as not to interfere with the completion of the Work, and within 30 days after the Contract Date, except for emergencies.

B. Substitutions, if approved, will be by Change Order.

1.6 VOLUNTARY ALTERNATE PROPOSAL SUBSTITUTIONS

A. Voluntary alternate proposal substitutions will not be accepted as the basis of the proposal. Including voluntary alternate proposal substitutions in the Proposal may make the proposal void.

B. Voluntary alternate proposals may be added as separate attachments to the proposal, however they will not be considered during the comparative evaluation process.

C. Voluntary alternate proposal substitutions may be considered after comparative evaluation and selection of the most responsive proposal.

D. Voluntary alternate proposal substitutions that are in the County's best interest may be considered at a later time at the sole discretion of the County.

END OF SECTION

SECTION 01710

GUARANTEES AND CERTIFICATES AND CLOSE-OUT

CONDITIONS OF THE CONTRACT AND DIVISION 1, as indexed, apply to this Section.

PART 1 - GENERAL

This section is intended to assist the Contractor to prepare close out documents for the project. The items required by this section must be completed before final payment. The final payment must be submitted and certified as acceptable before release of retainage.

It is in Galveston County 's best interest to close out contracts as soon as possible. The County and Architect will assist the Contractor in whatever way possible to speed the process and simplify what appears to be a mountain of paper. This can be a fairly simple process if the Contractor attends regularly scheduled meetings, maintains the construction schedule, and is prepared ahead of time to accomplish it.

1.1 SCOPE

A. Contractor shall be responsible for and make good without extra charge any defects due to faults in labor or material on all parts of the Contract for one year (and longer where noted) after Substantial Completion of the Work as defined in the General Conditions.

B. Property not in the Contract but damaged due to defects, shall be repaired or replaced by the Contractor without extra charge.

C. When notified by the Owner or Architect that a defect exists and there is a doubt that the defect might be normal maintenance or a result of lack of normal maintenance, the Owner will send a representative with the Contractor’s representative to determine responsibility. Owner will not pay for such service calls if the defect is judged to be normal maintenance or a result of a lack of normal maintenance.

D. Neither the Final Certificate of Payment or payment of same, nor provision in the Contract Documents shall relieve the Contractor of the responsibility for negligence or faulty materials or workmanship within the extent and period provided by law and upon written notice, he shall remedy any defects due thereto and pay all expenses for any damage to other Work resulting there from. This guarantee of Work shall not relieve the Contractor of obligations of any Work not according to Plans and Specifications regardless of time of discovery.

1.2 WARRANTY

A. In addition to the General Contractor's one-year warranty, guarantees shall be submitted to the Architect in duplicate prior to application for final payment. Unless specified otherwise in their respective sections, all guarantees shall be for a period of one year from the date of Substantial Completion as evidenced by the Architect's Certificate of Substantial Completion. All guarantees shall include all

labor, material and delivery costs required to correct defective material or installation. Guarantees include but are not limited to:

1. Built-up Roofing (20-year)
2. Custom Hollow Metal
3. Dampproofing and Waterproofing (2-year)
4. Sealants (2-year)

B. Refer to Section 01630 for substitutions.

1.3 SUBSTANTIAL COMPLETION AND CLOSE-OUT

In plain English - Substantial Completion is that time when the Contractor is near enough to complete that he can ask for the warranties to begin and identify the few items left for final completion. It is the Contractor's responsibility to ask for Substantial Completion in writing. It does take some effort on the part of the Contractor but it is in his best interest to have this happen sooner rather than later.

A. On or about the end of the project, the following items shall be performed in order to achieve Substantial Completion and project close-out:

1. Contractor submits a thorough list of items to be completed or corrected (Punch List), along with a written request for Substantial Completion and inspection of the work.
2. The Architect and Engineer will inspect the project utilizing the Contractor's prepared Punch List, noting completed or incomplete items, and prepare a supplemental list of items that have been omitted or incomplete items that were not previously noted. The Architect's Project Representative, at his discretion, may attend and assist in the preparation of the Contractor's punch list.
3. Contractor completes corrections, and Architect and Engineer re-inspect (with Owner) to establish Date of Substantial Completion. **Note:** Any items remaining on date of Substantial Completion are appended to Certificate (AIA G-704).
4. After the Certificate of Substantial Completion has been executed by all parties, it is returned to the Architect. Items on the appended Punch List are to be completed or corrected within the time limits established in the Certificate of Substantial Completion.
5. Final Change Order executed (including allowance adjustments).
6. Contractor submits written notice that work is ready for final inspection and acceptance, and shall specifically note each item on the Punch List as being complete or the status of any incomplete item.
7. Contractor submits Final Application for Payment and a Certificate of Compliance, which indicates the following:
   a. All Permit Numbers
   b. Utility Release Dates
   c. The building has been duly inspected and found to comply with all code requirements and ordinances.
   d. A Certificate of Occupancy has been issued.
8. A-E (with Owner) make final inspection
9. Contractor submits additional final items:
   a. Consent of Surety to Final Payment (AIA G-707)
   b. Contractor's Affidavit of Payment of Debts and Claims (AIA G-706)

c. Contractor's Affidavit of Release of Liens (AIA G-706A with contractors, subcontractors and suppliers separate releases)
d. General Contractor's Guarantee
e. Subcontractors' Guarantees.
f. Maintenance and Instruction Manuals. All manuals will contain an index listing the information submitted. The index sections will be divided and identified by tabbing each section as listed in the index.
g. Record Drawings (reproducible prints <u>and</u> electronic drawings in .pdf or .dwg (Autocad 2010 or prior) format)
h. Final List of Subcontractors (AIA G-805)
i. Affidavits from Contractor Subcontractors and suppliers stating that no asbestos products have been installed in this project.
j. Furnish written warranties to the Owner including specific items in each product warranty stipulated for individual sections.
k. Documents identified as "affidavit" must be notarized.

10. Final Cleaning:
a. The work area shall be thoroughly cleaned inside and outside. Cleaning includes removal of smudges, marks, stains, fingerprints, soil, dirt, spots, dust, lint, and other foreign materials from finished and exposed surfaces.
b. Remove all temporary facilities.

B. All close-out documents shall be submitted in three ring binders with index tabs, detailed Table of Contents and page numbers. The close-out documents must be neatly organized and easily useable, as determined by the Architect and Owner.

C. Final release of retainage will not be certified by the Architect until the Contractor completes all of the above mentioned requirements.

D. Terminal Inspection:
1. Immediately prior to expiration of the one-year guarantee period, the Contractor shall make an inspection of the work in the company of the Architect and the Owner. The Architect and the Owner shall be given not less than ten (10) days notice prior to the anticipated date of terminal inspection.
2. Where any portion of the work has proven to be defective and requires replacement, repair or adjustment, the Contractor shall immediately provide materials and labor necessary to remedy such defective work, and shall execute such work without delay until completed to the satisfaction of the Architect and the Owner, even though the date of completion of the corrective work may extend beyond the expiration date of the guarantee period.
3. The Contractor shall not be responsible for correction of work which has been damaged because of neglect or abuse by the Owner, nor the replacement of parts necessitated by normal wear in use.

END OF SECTION

SECTION 02 100

SITE PREPARATION

PART 1 - GENERAL

1.01 DESCRIPTION

A. Clear and grub trees and shrubs, remove vegetation, strip topsoil and stockpile at locations on-site as directed by Owner, and remove aboveground and below grade obstructions in facilities construction areas; fill and rough grade.

1.02 PROTECTION

A. Provide temporary fencing, barricades, barriers, and guards to protect utilities, structures, and facilities to remain undisturbed.
B. Establish paths or traffic and material storage areas and conduct construction operations of moving mechanical equipment to maintain adequate clearance to prevent damage to items to remain undisturbed.
C. Maintain drainage sewers, drainage swales, and ditches or establish temporary drainage system to prevent flooding, sedimentation, or erosion damage to project site, adjacent properties, and receiving drainage ways and waters.
D. Maintain public roadway used during site preparation operations as haul roads, sweep roadways free of spillage, and restore to previous condition.

PART 2 - PRODUCTS

2.01 MATERIALS

A. Fill: Sand, gravel, earth, or combination which can be compacted to form stable embankments and fills meeting select borrow standards:
   1. Liquid limit: 45 maximum, ASTM D4318.
   2. Plasticity index: 4 minimum, 15 maximum ASTM D4318.
   3. Free from trash, vegetation, organic matter, large stones, hard lumps of earth and frozen, corrosive or perishable material.
   4. Well broken up, free of clods of hard earth, rocks, and stones greater than 2 in. dimension.

PART 3 - EXECUTION

3.01 PRESERVATION OF STAKING

A. Site preparation operations shall preserve survey staking.
B. Employ surveyor to check staking and reset any missing, disturbed, or damaged staking upon completion of site preparation at no additional cost to Owner.
C. Use staking to ensure that clearing, site preparation, and removal of obstructions within designated construction areas has been accomplished.
D. Barricade bench marks to protect from damage or displacement.

3.02 SITE CLEARING

A. Topsoil Removal:
   1. Remove growths of grass from areas before stripping.
   2. Topsoil is defined as surface soil found to depths encountered.

3. Strip topsoil to depths encountered.
4. Perform stripping in a manner to prevent intermingling of topsoil with underlying sterile subsoil and remove objectionable materials including clay lumps, stones over 2 in. in diameter, weeds, roots, leaves, and debris.
5. Stockpile topsoil in storage piles on site but outside facility construction areas at locations as directed.
6. Construct storage piles to freely drain surface water.
7. Cover storage piles if required to prevent wind-blown dust.

B. Clearing and Grubbing:
1. Clear designated area of trees and brush.
2. Completely remove stumps and roots.
3. Fill depressions caused by clearing and grubbing operations with fill material, unless further excavation or earthwork is shown.
4. Place fill material in horizontal layers not exceeding 6 in. loose depth, and thoroughly compact to density equal to adjacent original ground.
5. Within areas required for roadways, completely remove stumps and roots, and backfill with specified fill material, and compact to 95 percent maximum density (Proctor Density), ASTM D698.
6. Blade facility construction areas to prevent ponding of water and to provide drainage, except in areas to be immediately excavated.
7. Complete operations by bulldozing, blading, and grading so facility construction areas are free of holes, unplanned ditches, abrupt changes in elevations and irregular contours.
8. Preserve drainage of area.
9. Establish temporary and permanent drainageways to legally dispose of runoff and to prevent on-site flooding and ponding.

C. Obstruction Removal:
1. Remove and dispose of obstructions and objectionable materials within project area.
2. Remove culverts, storm sewers, manholes, and inlets, if shown, in proper sequence to maintain necessary traffic and site drainage.
3. Paving improvements designated for removal shall be broken up and hauled away and disposed of off-site.
4. Remove and dispose of off-site: Aboveground obstructions such as concrete slabs and walks, retaining and other walls, stone, brick, concrete bases, debris, trash, scrap, rubbish, poles, and fences not designated to remain.
5. Completely remove and dispose of off-site: Below grade obstructions, cisterns, manholes, inlets, junction boxes, foundations, footings, septic tanks, basins, underground conduits, and abandoned utilities if not designated to remain.
6. Abandoned below grade structures allowed to remain: Backfill manholes, junction boxes, inlets and other structures containing below-grade voids so no below grade voids exist.
7. Plug abandoned underground sewers with concrete and seal dead-end abandoned utilities, as required at cut-off points.
8. Use of explosives for demolition and removal work will not be permitted.
9. Backfill and compact holes remaining after removal of below grade obstructions.
10. Complete operations by backfilling, bulldozing, blading, and grading so prepared area is free of holes, unplanned ditches, abrupt changes in elevations and irregular contours and site drainage is preserved and ponding of water is prevented.

3.03 UNSUITABLE MATERIAL

A. Undercut and replace material which Owner designates as unsuitable for subsequent construction.

B. Material used to replace unsuitable material shall be suitable fill and backfill material specified in this Section.

C. Payment for replacing unsuitable material will be in compliance with provisions for "Added Work" in General Conditions.

3.04 FILLING AND ROUGH GRADING

A. Depressions and areas below grade in site area shall be filled to rough grade elevations shown using material from excavations and material from high areas; material which meets specifications for fill.

B. Compact fill to preclude further consolidation.

C. Surface shall be smoothed and rough-graded in compliance with item entitled "Rough Grading", this Section.

3.05 DISPOSAL OF WASTE MATERIALS

A. Trash, debris, cleared and grubbed materials, and unsuitable, unusable, and undesirable materials necessary and designated by Owner to be removed from construction area shall be classified as follows:

1. Combustible waste materials: Materials feasible, practical and non-toxic to dispose of by burning, including cleared and grubbed materials.
2. Incombustible waste materials: Materials not burnable, not feasible, and not practical to dispose of by burning.

B. Burning on Owner's Property: Burning of combustible waste material and cleared and grubbed materials will not be permitted on Owner's property.

C. Combustible waste materials and incombustible waste materials shall become property of Contractor and legally disposed of off-site.

3.06 EXCESS MATERIAL

A. Excess material not required for filling site and designated by Owner to be removed shall become property of Contractor and removed from Owner's controlled property and legally disposed of.

B. Transport excess materials required to fill site to locations directed by Owner and spread and compact as directed by Owner.

3.07 ROUGH GRADING

A. Site shall be rough-graded to eliminate holes and sharp breaks in grade and to fit into area drainage pattern.

B. Site shall drain readily.

END OF SECTION

SECTION 02 161

TRENCH SAFETY SYSTEM

PART 1 - GENERAL

1.01 SECTION INCLUDES
A. Trench safety system for the construction of trench excavations.

1.02 PRICES
A. Measurement for trench safety systems used on trench excavations is on a linear foot basis measured horizontally along the centerline of the trench to the centerline of manholes and to the edge of structures.

1.03 DEFINITIONS
A. A trench shall be defined as a narrow excavation (in relation to its depth) made below the surface of the ground. In general, the depth is greater than the width, but the width of a trench (measured at the bottom) is not greater than 15 feet.
B. Trench Safety Systems include but are not limited to sloping, sheeting, trench boxes or trench shields, sheet piling, cribbing, bracing, shoring, dewatering or diversion of water to provide adequate drainage.

1.04 SUBMITTALS
A. Submit a safety program specifically for the construction of trench excavation ans shoring plans. Design the trench safety program to be in accordance with OSHA 29CFR standards governing the presence and activities of individuals working in and around trench excavations.
B. Construction and shop drawings containing deviations from OSHA standards or special designs shall be sealed by a licensed Engineer retained and paid by Contractor.
C. Review of the safety program by the Engineer will only be in regard to compliance with this specification and will not constitute approval by the Engineer nor relieve Contractor of obligations under State and Federal trench safety laws.

1.05 REGULATORY REQUIREMENTS
A. Install and maintain trench safety systems in accordance with the detail specifications set out in the provision of Excavations, Trenching, and Shoring, Federal Occupation Safety and Health Administration (OSHA) Standards, 29 CFR, Part 1926, Subpart P, as amended, including Final Rule, published in the Federal Register Vol. 54, No. 209 on Tuesday, October 31, 1989.
B. Install in accordance with the Texas Health and Safety Code Ann., §756.021 (Vernon 1991).

1.06 INDEMNIFICATION
A. Contractor shall indemnify and hold harmless the Owner and the Engineer, their employees and agents, from any and all damages, costs (including, without limitation, legal fees, court costs, and the cost of investigation), judgements or claims by anyone for injury or death of persons resulting from the collapse or failure of trenches constructed under this contract either from joint or sole responsibility.

PART 2 - PRODUCTS - NOT USED

PART 3 - EXECUTION

3.01 INSTALLATION

A. Install and maintain trench safety systems in accordance with applicable regulations and designs.

3.02 INSPECTION

A. Contractor shall make daily inspection of the trench safety systems to ensure its compliance with applicable regulations and to verify its functional integrity.

B. If evidence of possible cave-ins or slides is apparent, immediately stop work in the trench until the necessary precautions have been taken by Contractor to safeguard personnel entering the trench.

3.03 FIELD QUALITY CONTROL

A. Contractor shall determine specific applicability of the trench safety system to each field condition encountered on the project.

END OF SECTION

SECTION 02220

EXCAVATIONS, TRENCHING AND BACKFILLING

PART 1 - GENERAL

1.00 SCOPE

A. This section covers excavation and trenching work and shall include the necessary clearing, grubbing, and preparation of the site, removal and disposal of all debris; excavation and trenching as required; the handling, storage, transportation, and disposal of all excavated material; all necessary sheeting, shoring, and protection work; preparation of subgrades; pumping and dewatering as necessary or required; protection of adjacent property; backfilling; pipe embedment; surfacing and grading; and other appurtenant work.

2.00 GENERAL REQUIREMENTS.

A. Excavations shall provide adequate working space and clearances for the work to be performed therein and for installation and removal of concrete forms. In no case shall excavation faces be undercut for extended footings.

B. Subgrade surfaces shall be clean and free of loose material of any kind when concrete is placed thereon.

C. Except where exterior surfaces are specified to be dampproofed, monolithic concrete manholes and other concrete structures, or parts thereof, which do not have footings that extend beyond the outside face of exterior walls, may be placed directly against excavation faces without the use of outer forms, provided that such faces are stable and also provided that a layer of polyethylene film is placed between the earth and the concrete.

D. Backfilling and construction of fills and embankments during freezing weather shall not be done except by permission of the Engineer. No backfill, fill, or embankment materials shall be installed on frozen surfaces, nor shall frozen materials, snow, or ice be placed in any backfill, fill, or embankment.

3.00 CLEARING

A. All clearing shall be performed as necessary for access, stringing of pipeline materials, and construction of the pipeline and appurtenant structures.

4.00 BLASTING

A. Blasting shall not be allowed.

5.00 UNAUTHORIZED EXCAVATION

A. Except where otherwise authorized, indicated, or specified, all materials excavated

below the bottom of concrete walls, footings, slabs on grade, foundations and pavements shall be replaced, by and at the expense of the Contractor, with cement stabilized sand or crushed stone, at the option of the Engineer.

6.00 DEWATERING

A. The Contractor shall provide and maintain adequate dewatering equipment to remove and dispose of all surface and ground water entering excavations, trenches, or other parts of the work. Each excavation shall be kept dry during subgrade preparation and continually thereafter until the structure to be built, or the pipe to be installed therein, is completed to the extent that no damage from hydrostatic pressure, flotation, or other cause will result.

B. All excavations for concrete structures or trenches which extend down to or below groundwater shall be dewatered by lowering and keeping the groundwater level beneath such excavations a minimum of 2 feet or more below the bottom of the excavation.

C. Surface water shall be diverted or otherwise prevented from entering excavated areas or trenches to the greatest extent practicable without causing damage to adjacent property.

D. The Contractor shall be responsible for the condition of any pipe or conduit which he may use for drainage purposes, and all such pipes or conduits shall be left clean and free of sediment.

7.00 SHEETING AND SHORING

A. Except where banks are cut back on a stable slope, excavation for structures and trenches shall be sheeted, braced, and shored as necessary to prevent caving or sliding.

B. Trench sheeting or trench boxes shall not be pulled or moved before backfilling unless the pipe strength is sufficient to carry trench loads based on trench width to the back of sheeting, nor shall sheeting be pulled after backfilling. With the concurrence of the Engineer, sheeting shall be left permanently in the trench or cut off at the top of the pipe. No payment will be made for sheeting left in place.

8.00 STABILIZATION

A. Subgrades for concrete structures and trench bottoms shall be firm, dense, and thoroughly compacted and consolidated; free from mud and muck; and sufficiently stable to remain firm and intact under the feet of the workmen.

B. Subgrades for concrete structures or trench bottoms, which are otherwise solid but which become muck on top due to construction operations, shall be reinforced with one or more layers of crushed rock or gravel. The stabilizing material shall be spread and compacted to a depth of not more than 4 inches; if the required depth exceeds 4 inches, the material shall be furnished and installed as specified for granular fills. Not more than 0.5 inch depth of mud or muck shall be allowed to remain on stabilized

trench bottoms when the pipe bedding material is placed thereon. The finished elevation of stabilized subgrades for concrete structures shall not be above subgrade elevations indicated on the drawings.

9.00 GRANULAR FILLS

A. Granular fills shall be placed on suitably prepared subgrades and compacted by vibration. Granular fill material shall be crushed rock free from dust, clay, or trash and shall be graded 1.5 inches to No. 4 as defined in ASTM C33.

B. Where granular fills are to be covered with concrete, the top surface shall be graded to the required subgrade and covered with polyethylene film.

10.00 TRENCH EXCAVATION

A. No more trench shall be opened in advance of pipe laying than is necessary to expedite the work. One block or 400 ft. shall be the maximum length of open trench on any line under construction. Prior to the end of each working day, the Contractor shall have all trenches backfilled with not more than 10 feet of open trench, which shall be properly barricaded and illuminated.

B. Except where tunneling or boring is indicated on the drawings, is specified, or is permitted by the Engineer, all trench excavation shall be open cut from the surface.

1. Alignment, Grade, and Minimum Cover. The alignment and grade or elevation of each sewer pipeline shall be fixed and determined from offset stakes. Vertical and horizontal alignment of pipes, and the maximum joint deflection used in connection therewith, shall be in conformity with requirements of the section covering installation of pipe. The sewer grade or elevations are definitely fixed by the contract drawings.

2. Limiting Trench Widths. Trenches shall be excavated to a width which will provide adequate working space and sidewall clearances for proper pipe installation, jointing, and embedment.

a. Minimum Sidewall Clearance. Minimum permissible sidewall clearance between installed pipe and each trench wall shall be as follows:

Nominal Pipe Size (inches)	Minimum Sidewall Clearance (inches)
6 - 8	6
10 - 20	8
24 - 27	10
30	11

The stipulated minimum sidewall clearances are not minimum average clearances, but are minimum clear distances which will be required.

b. Maximum Trench Widths. Maximum trench widths above an elevation one foot above the top of installed pipe is not critical. Maximum trench width at the elevation of the top of the pipe shall be 2 ft. plus the pipe O.D.

3. Where necessary to reduce earth load on trench banks to prevent sliding and caving, banks may be cut back on slopes which shall not extend lower than one foot above the top of the pipe.

C. Mechanical Excavation. The use of mechanical equipment will not be permitted in locations where its operation would cause damage to trees, buildings, culverts, or other existing property, utilities, or structures above or below ground. In all such locations, hand excavating methods shall be used. Mechanical equipment used for trench excavation shall be of a type, design, and construction, and shall be so operated that the rough trench excavation bottom elevation can be controlled, that uniform trench widths and vertical sidewalls are obtained at least from an elevation one foot above the top of the installed pipe to the bottom of the trench, and that trench alignment is such the pipe when accurately laid to specified alignment will be centered in the trench with adequate clearance between the pipe and sidewalls of the trench. Undercutting the trench sidewall to obtain clearance will not be permitted.

D. Cutting Pavements. Cuts in concrete pavement, asphaltic concrete pavement, and concrete base pavements shall be no larger than necessary to provide adequate working space for proper installation of pipe and appurtenances. Cutting shall be started with a concrete saw in a manner which will provide a clean groove at least 1.5 inches deep along each side of the trench and along the perimeter of cuts for structures.

Concrete pavement, asphaltic concrete pavement, and concrete base pavement over trenches excavated for pipelines shall be removed so that a shoulder not less than 12 inches in width at any point is left between the cut edge of the pavement and the top edge of the trench. Trench width at the bottom shall not be greater than at the top and no undercutting will be permitted. Pavement cuts shall be made to and between straight or accurately marked curved lines which, unless otherwise required, shall be parallel to the centerline of the trench.

Pavement removed for connections to existing lines or structures shall not be of greater extent than necessary for the installation. Where the trench parallels the length of concrete walks and the trench location is all or partially under the walk, the entire walk shall be removed and replaced. Where the trench crosses drives, walks, curbs, or other surface construction, the surface construction shall be removed and replaced between existing joints or between saw cuts as specified for pavement.

E. Excavation Below Pipe Subgrade. Except where otherwise required, pipe trenches shall be excavated below the underside of the pipe, as indicated herein or on the Drawings, to provide for the installation of granular embedment.

F. Artificial Foundations in Trenches. Whenever unsuitable or unstable soil conditions are encountered, trenches shall be excavated below grade and the trench bottom shall be brought to grade with suitable material. In such cases, adjustments will be made in the contract price in accordance with the provisions of the General Conditions.

G. Bell Holes. Bell holes shall provide adequate clearance for tools and methods used in installing pipe. No part of any bell or coupling shall be contact with the trench bottom, trench walls, or granular embedment when the pipe is jointed.

11.00 PIPE EMBEDMENT

A. Embedment materials both below and above the bottom of the pipe, classes of embedment to be used, and placement and compaction of embedment materials shall conform to the requirements shown on the Drawings and to the following supplementary requirements. Embedment material shall contain no cinders or other material which may cause pipe corrosion.

B. Embedment Classes. The Embedment classes shall be denoted on the Drawings. The use of each class shall be as shown on the Pipeline Schedule.

C. Placement and Compaction. Granular embedment material shall be spread and the surface graded to provide a uniform and continuous support beneath the pipe at all points between bell holes or pipe joints. It will be permissible to slightly disturb the finished subgrade surface by withdrawal of pipe slings or other lifting tackle.

D. After each pipe has been graded, aligned, and placed in final position on the bedding material and shoved home, sufficient pipe embedment material shall be deposited and compacted under and around each side of the pipe and back of the bell or end thereof to hold the pipe in proper position and alignment during subsequent pipe jointing and embedment operations. Embedment material shall be deposited and compacted uniformly and simultaneously on each side of the pipe to prevent lateral displacement.

E. Groundwater Barrier. Continuity of embedment material shall be interrupted by low permeability groundwater barriers to impede passage of water through the embedment. Barrier material shall meet soil classification GC, SC, CL, or ML-CL, and shall be compacted to 95 percent of maximum density. Material may be finely divided suitable job excavated material, free from stones, organic matter and debris. Groundwater barriers for sewer lines shall be compacted soil around each manhole. Groundwater barriers for force mains shall be installed at 500 foot intervals.

F. Embedment Material. Materials used for pipe embedment shall be subject to review by the Engineer. Reports covering the source, composition, and gradation of each material shall be submitted for review prior to using any embedment material.

1. Bank sand. Bank sand shall be locally available clean sand. Sand shall have less than 12 percent by weight of material passing a No. 200 sieve. Its plasticity index shall be 4 or less.

2. Cement Stabilized Sand. Cement stabilized sand shall be bank sand stabilized with the addition of 1.5 sacks of Portland Cement, ASTM C150, Type I, per ton of mixture. Cement stabilized sand shall be thoroughly mixed in a pug mill. The mixture shall be moist when mixed and delivered to the job site in a moist condition. Cement stabilized sand shall be placed within one hour of initial mixing.

3. Crushed stone. Crushed limestone with a gradation of:

Passing 1" sieve	100%

Passing 3/4" sieve	90-100%
Passing 3/8" sieve	20-55%
Passing #4 sieve	0-10%
Passing #8 sieve	0-5%

12.00 TRENCH BACKFILL

A. All trench backfill above pipe embedment shall conform to the following requirements.

1. A layer of backfill material not more than 8 inches deep may be placed over concrete arch encasement or concrete reaction blocking after the concrete has reached its initial set, to aid curing. No additional backfill shall be placed over arch encasment or blocking until the concrete has been in place for at least 3 days.

B. Compacted Backfill. Compacted backfill will be required for the full depth of the trench above the embedment in the following locations:

1. Where beneath pavements, surfacings, driveways, curbs, gutters, walks, or other surface construction or structures.

2. Where in street, road, or highway shoulders.

3. In established lawn areas. The top portion of backfill beneath established lawn areas shall be finished with at least 12 inches of topsoil corresponding to, or better than, that underlying adjoining lawn areas. Beneath pavements, surfacings, driveways, curbs, gutters, walks, or other surface construction or structures or beneath street, road or highway shoulders, compacted backfill shall be suitable granular material only.

4. At the option of the Contractor, compacted backfill may be (1) suitable job excavated material; or (2) bank sand as described below:

a. Job Excavated Material. Job excavated material may be used for compacted backfill when the job excavated material is finely divided and free from debris, organic material, cinders or other corrosive material, and stones larger than 3 inches in greatest dimension. Masses of moist, stiff clay shall not be used. Job excavated materials shall be placed in uniform layers not exceeding 8 inches in uncompacted thickness. Each layer of material shall have the best practicable moisture content for satisfactory compaction. The material in each layer shall be wetted or dried as required and thoroughly mixed to ensure uniform moisture content and adequate compaction. Increased layer thickness may be permitted for noncohesive material if the Contractor demonstrates to the satisfaction of the Engineer that the specified compacted density will be obtained. The method of compaction and the equipment used shall be appropriate for the material to be compacted and shall not transmit damaging shocks to the pipe. Job excavated material shall be compacted to 95 percent of maximum density at optimum moisture content as determined by ASTM D698 when that test is appropriate, or to 70 percent relative density as determined by ASTM D2049 when that test is appropriate.

b. Bank Sand. Sand for bank sand backfill shall be clean with not more than 25 percent retained on a No. 4 sieve and not more than 12 percent passing a No. 200 sieve and shall have an effective size between 0.10 mm and 0.30 mm. Sand shall be placed and compacted by a mechanical type vibrator. Bank sand shall be compacted to 95 percent of maximum density at optimum moisture content as determined by ASTM D698 or to 70 percent relative density as determined by ASTM D2049, whichever is appropriate. Clays are not generally suitable as compacted material.

5. Groundwater barriers specified under pipe embedment shall extend to the top of the bank sand or job excavated backfill.

C. Uncompacted Backfill. Compaction of trench backfill above pipe embedment will not be required except to the extent necessary to prevent future settlement. (Approximate backfill compaction equal to 85% of Standard Proctor density.)

1. Uncompacted earth backfill material to be placed above embedments shall be free of brush, roots more than two inches in diameter, debris, cinders, or other corrosive material, but may contain rubble and detritus from rock excavation, stones, and boulders in certain portions of the trench depth.

2. Uncompacted backfill material above embedments shall be placed by methods which will not impose excessive concentrated or unbalanced loads, shock, or impact on and which will not result in displacement of installed pipe.

3. Compact masses of stiff clay or other consolidated material more than one cubic foot in volume shall not be permitted to fall more than 5 feet into the trench unless cushioned by at least 2 feet of loose backfill above pipe embedment.

13.00 FILLS FOR PIPE COVER

A. Additional backfill over the pipe to provide minimum cover shall be excavated material or suitable imported materials.

B. Materials for backfill shall be composed of earth only and shall contain no wood, grass, roots, broken concrete, stones, trash, or debris of any kind. Backfill shall be graded to ensure proper drainage.

14.00 STRUCTURE BACKFILL

A. Backfill around structures shall be compacted to the extent necessary to prevent future settlement.

B. Material for backfill shall be composed of earth only and shall contain no wood, grass, roots, broken concrete, stones, trash, or debris of any kind. No tamped or otherwise mechanically compacted backfill shall be deposited or compacted in water.

15.00 TESTS

A. As stipulated in the quality control section, all tests required for preliminary review of

materials shall be made by an acceptable independent testing laboratory at the expense of the Contractor. Two initial gradation tests shall be made for each type of embedment, fill, or backfill material and one additional gradation test shall be made for each additional 500 tons of each material. Moisture-density (Proctor) tests and relative density tests on the materials, and all in-place field density tests, shall be made at the expense of the Owner.

16.00 TUNNEL EXCAVATION

A. Pipelines shall be constructed in tunnels of the type designated on the drawings, in conformity with the requirements which follow. Before starting work on any tunnel, detailed drawings, specifications, and other data covering the liner to be used shall be submitted in accordance with the submittals section. The clear inside diameter of tunnel liners shall be within 4 inches of the nominal diameter indicated on the drawings.

B. Tunnel Liner Plate. The liner plates shall be designed so that erection and assembly can be accomplished entirely from inside the tunnel. Liner plates shall be capable of withstanding the ring thrust load and transmitting this from plate to plate. Linear plates shall have a minimum thickness of 0.1046 inches (12 gauge).

1. Care shall be taken during installation to maintain alignment, grade, and the circular shape of the tunnel. Longitudinal joints in adjacent rings shall be staggered and not in alignment more often than every second ring.

2. The entire operation of tunneling and setting of liners shall be acceptable to the Owner and the agency having jurisdiction. Adequate means shall be provided to keep the work free from water.

3. Sufficient sections shall be provided with 1.5 inch or larger grouting holes, located near the centers, so that when the plates are installed there will be one line of holes on each side of the tunnel and one at the crown; the lower line of holes on each side shall not be more than 18 inches above the invert. The holes in each line shall be not more than 9 feet apart and shall be staggered.

4. All space between the lining and the earth shall be filled with grout forced in under pressure. The grout shall be mixed in the volumetric proportions of 2 parts Portland cement, one part fly ash, and not to exceed 6 parts of sand or low density cellular concrete (60 PFC). Enough water shall be used to produce, when well mixed, a grout having the consistency of thick cream. As the pumping through any hole is stopped, it shall be plugged to prevent backflow of grout.

5. Grouting shall be performed in a sequence which will preclude deflections exceeding 5 percent of the tunnel diameter.

C. Corrugated Steel Pipe. Corrugated steel pipe shall be manufactured in accordance with all applicable requirements of the specifications of the American Railway Engineering Association.

1. Pipe shall be fabricated from galvanized steel sheets not less than 0.1046 inches (12 gauge) in thickness, measured before galvanizing.

2. Each conduit shall be installed by jacking into place. Earth displaced by the conduit shall be removed through the interior of the conduit by hand, by auger, or by other acceptable means. Sections of the corrugated steel pipe shall be coupled with bolted connections to form a continuous conduit capable of resisting all stresses, including jacking stresses. Each corrugated steel pipe conduit in its final position shall be straight and true in alignment and grade, as required by the drawings. There shall be no space between the earth and the outside of the conduit.

D. Steel Pipe: Steel pipe with a minimum wall thickness of 0.25 inches.

E. Wood Skids. Wood skids shall be provided as indicated on the drawings. The wood shall be pressure treated with creosote, pentachlorophenol, or salt type preservative in accordance with AWPA C2. Cut surfaces shall be given two heavy brush coats of the same preservative.

1. The wood skids shall be securely strapped to the pipe with steel strapping material at least 0.75 inch wide.

F. Stabilized Sand Backfill. After installation of the pipe in the tunnel, the entire annular space between the pipe and the tunnel walls shall be filled with stabilized sand. Stabilized sand shall be mixed in the proportions of at least 282 lbs of portland cement to each cubic yard of sand. Cement, sand (fine aggregate), and water shall be as specified for cast-in-place concrete. Stabilized sand shall be thoroughly mixed in a mechanical mixer and shall contain only enough water to produce an easily handled mixture. Stabilized sand shall be blown into the casing so that all space is filled.

G. End Closure. Both ends of each casing conduit shall be closed with 2 inch thick wood plans or 8" brick as indicated on the drawings. Planks shall be pressure treated with creosote, pentachlorophenol, or salt type preservative in accordance with AWPA C2. Cut surfaces shall be given two heavy brush coats of the same preservative. Nails and fasteners shall be galvanized or aluminum coated.

H. Paved Invert. The bottom portion of each casing conduit constructed using either tunnel liner plates or corrugated steel pipe shall be provided with a paved concrete invert as indicated on the drawings.

I. Interruption of Traffic. No interruption of traffic will be permitted at any location where tunnels are required.

17.00 BORING EXCAVATION

A. Pipelines shall be constructed in bored holes where designated on the drawings, in conformity with the requirements which follow.

B. Carbon Steel Pipe. Carbon steel pipe, standard weight, shall be used for casing the bored hole where casing is required on the Drawings. Joints shall be welded.

C. Wood Skids. Wood skids shall be provided as indicated on the drawings. The wood shall be pressure treated with creosote, pentachlorophenol, or salt-type preservative in

accordance with AWPA C2. Cut surfaces shall be given two heavy brush coats of the same preservative.

1. The wood skids shall be securely strapped to the ductile iron or PVC pipe with stainless steel strapping material at least 0.75 inches wide.

D. End Closure. Both ends of each casing conduit shall be closed with treated 2-inch wood or 8-inch brick as indicated on the Drawings.

E. Interruption of Traffic. No interruption of traffic will be permitted at any location where tunnels are required.

18.00 DRAINAGE MAINTENANCE

A. Trenches across roadways, driveway, walks, or other traffic-ways adjacent to drainage ditches or water courses shall not be backfilled prior to completion of backfilling the trench on the upstream side of the traffic-way, to prevent impounding water after the pipe has been laid.

B. Bridges and other temporary structures required to maintain traffic across such unfilled trenches shall be constructed and maintained by the Contractor.

C. Backfilling shall be done so that water will not accumulate in unfilled or partially filled trenches.

D. All material deposited in roadway ditches or other water courses crossed by the line of trench shall be removed immediately after backfilling is completed and the original section, grades, and contours of ditches or water courses shall be restored.

E. Surface drainage shall not be obstructed longer than necessary.

19.00 PROTECTION OF TRENCH BACKFILL IN DRAINAGE COURSES

A. Where trenches are constructed in ditches or other water courses, backfill shall be protected from surface erosion.

B. Where the grade of the ditch exceeds one percent, ditch checks shall be installed if indicated on the drawings.

C. Unless otherwise indicated on the drawings, ditch checks shall be concrete. Ditch checks shall extend not less than 2 feet below the original ditch or water course bottom for the full bottom width and at least 18 inches into the side slopes and shall be at least 12 inches thick.

20.00 DISPOSAL OF EXCESS EXCAVATED MATERIALS

A. Except as otherwise permitted, all excess excavated materials shall be disposed of away from the site of the work.

1. Broken concrete and other debris resulting from pavement or sidewalk removal,

excavated rock in excess of the amount permitted to be installed in trench backfill, debris encountered in excavation work, and other similar waste materials shall be disposed of away from the site of the work.

2. Excess earth from excavations located in unimproved property may be distributed directly over the pipe trench and within the pipeline right-of-way to a maximum depth of 6 inches above the original ground surface elevation at and across the trench and sloping uniformly each way. Material thus wasted shall be carefully finished with a drag, blade machine, or other suitable tool to a smooth, uniform surface without obstructing drainage at any point. Wasting of excess excavated material in the above manner will not be permitted where the line of trench crosses or is within a railroad, public road, or highway right-of-way. The disposal of waste and excess excavated materials, including hauling, handling, grading, and surfacing shall be a subsidiary obligation of the Contractor and no separate payment will be made therefor.

21.00 SETTLEMENT

A. The Contractor shall be responsible for all settlement of backfill, fills, and embankments which may occur within the correction period stipulated in the General Conditions.

B. The Contractor shall make, or cause to be made, all repairs or replacements made necessary by settlement within 30 days after notice from the Engineer or Owner.

END OF SECTION

SECTION 02 252

CEMENT STABILIZED SAND

PART 1 - GENERAL

1.01 SECTION INCLUDES
- A. Cement stabilized sand for backfill and bedding.

1.02 UNIT PRICES
- A. No payment will be made for cement stabilized sand under this Section unless specifically noted in bid documents. Include payment for cement stabilized sand in unit price for applicable utility or structure installation section.

1.03 DESIGN REQUIREMENTS
- A. Design sand-cement mixture to produce a minimum unconfined compressive strength of 100 pounds per square inch in 48 hours when compacted to 95 percent of ASTM D-698 and when cured in accordance with ASTM C-31, item 9, and tested in accordance with ASTM C-31. Mix shall contain a minimum of 1-½ sacks of cement per cubic yard.

PART 2 - PRODUCTS

2.01 MATERIALS
- A. Cement: Type 1 Portland cement conforming to ASTM C-150.
- B. Sand: Clean, durable sand meeting grading requirements for fine aggregates of ASTM C-33, and the following requirements:
  1. Classified as SW, SP or SM by the United Soil Classification System of ASTM D-2487.
  2. Verify through referenced tests that content of deleterious materials in sand is within following limits:
     - a. Clay lumps, ASTM C-142; less than 0.5 percent.
     - b. Lightweight pieces, ASTM C-123; less than 5.0 percent.
     - c. Organic impurities, ASTM C-40; color no darker than the standard color.
  3. Plasticity index of 4 or less when tested in accordance with ASTM D-4318.
- C. Water: Potable water, free of oils, acids, alkalies, organic matter or other deleterious substances, meeting requirements of ASTM C-94.

2.02 MIXING MATERIALS
- A. Add required amount of water and mix thoroughly in a pugmill-type mixer.
- B. Stamp batch ticket at plant with time of loading. Material not placed and compacted within 4 hours after loading shall be rejected.

PART 3 - EXECUTION

3.01 PLACING
- A. Place sand-cement mixture in 8-inch-thick loose lifts and compact to 95 percent of ASTM D-698. Perform compaction of sand-cement mixture within 4 hours after addition of water to mix at the plant.

B. Do not place sand-cement mixture in standing or free water.

3.02 FIELD QUALITY CONTROL

A. Random samples of delivered product may be taken in the field at point of delivery and tested in accordance with ASTM D-1633.

END OF SECTION

Section 02690

PRESSURE AND LEAKAGE TESTS

PART 1 G E N E R A L

1.01 SECTION INCLUDES

A. Field hydrostatic testing of newly installed water pipelines.

B. Specifications identify requirements for both small-diameter (less than or equal to 20 inches) water mains and large-diameter (greater than 20 inches) water mains. When specifications for large-diameter water mains differ from those for small- diameter water mains, paragraphs for large-diameter mains will govern for large-diameter pipe.

1.02 MEASUREMENT AND PAYMENT

A. Unit Prices.

1. No payment will be made for hydrostatic testing of pipelines under this Section. Include cost in unit price of pipelines being tested.

B. Stipulated Price (Lump Sum). If the Contract is a Stipulated Price Contract, payment for work in this Section is included in the total Stipulated Price.

PART 2 P R O D U C T S - Not Used

PART 3 E X E C U T I O N

3.01 PREPARATION

A. Disinfect water system pipelines prior to hydrostatic testing.

B. Hydrostatically test newly installed water pipelines after disinfection, if required, and before connecting to local water distribution system.

C. Water for testing will be charged to Contractor in accordance with local ordinances. Prior to hydrostatic testing, Contractor's meter shall be tested, approved, and sealed by the locals Utility District representative’s meter repair shop.

D. For large-diameter water mains, test pipelines in lengths between valves, or plugs, of not more than 4,400 feet.

E. Small-diameter pipelines shall be tested in lengths between valves, or plugs, of not more than 1,500 feet.

F. Conduct hydrostatic tests in presence of Engineer.

3.02 TEST PROCEDURES

A. Furnish, install, and operate connections, pump, meter and gages necessary for hydrostatic testing.

B. Allow pipeline to sit a minimum of 24 hours from time it is initially disinfected until testing begins, to allow pipe wall or lining material to absorb water. Periods of up to 7 days may be required for mortar lining to become saturated.

C. For small-diameter pipelines, expel air and apply a minimum test pressure of 125 psi. For large-diameter water mains, expel air and apply a minimum test pressure of 150 psi.

D. Begin test by 9:00 a.m. unless otherwise approved by Engineer. Maintain test pressure for 8 hours. If a large quantity of water is required to maintain pressure during test, testing shall be discontinued until cause of water loss is identified and corrected.

E. Keep valves inside pressure reducing stations closed during hydrostatic pressure test.

3.03 ALLOWABLE LEAKAGE FOR WATER MAINS

A. During hydrostatic tests, no leakage will be allowed for sections of water mains consisting of welded joints.

B. Maximum allowable leakage for water mains with rubber gasketed joints: 10.63 gallons per inch nominal diameter per mile of pipe per 24 hours while testing at 125 psi or 11.65 gallons per inch nominal diameter per mile of pipe per 24 hours while testing at 150 psi.

3.04 CORRECTION FOR FAILED TESTS

A. Repair joints showing visible leaks on surface regardless of total leakage shown on test. Check valves and fittings to ensure that no leakage occurs that could affect or invalidate test. Remove any cracked or defective pipes, fittings, and valves discovered during pressure test and replace with new items.

B. City Engineer may require failed lines to be disinfected after repair and prior to retesting. Conduct and pay for subsequent disinfection operations in accordance with requirements of Section 02675 - Disinfection of Water Lines. Contractor shall pay for water required for additional disinfection and retesting.

C. Repeat test until satisfactory results are obtained.

3.05 COMPLETION

A. Upon satisfactory completion of testing, remove risers remaining from disinfection and hydrostatic testing, and backfill excavation promptly.

END OF SECTION

SECTION 02 521

CONCRETE PAVING

PART 1 - GENERAL

1.01 WORK INCLUDED
- A. Concrete sidewalks, curbs, gutters, and streets.
- B. Reinforcement.
- C. Surface finish.
- D. Curing.

1.02 WORK INSTALLED BUT FURNISHED UNDER OTHER SECTIONS
- A. None

1.03 REFERENCES
- A. ACI 301 - Specifications for Structural Concrete for Buildings.
- B. ANSI/ASTM A185 - Welded Steel Wire Fabric for Concrete Reinforcement.
- C. ANSI ASTM A497 - Welded Deformed Steel Wire Fabric for Concrete Reinforcement.
- D. ANSI/ASTM D1751 - Preformed Expansion Joint Fillers for Concrete Paving and Structural Construction.
- E. ANSI/ASTM D1752 - Preformed Sponge Rubber and Cork Expansion Joint Fillers for Concrete Paving and Structural Construction.
- F. ASTM A615 - Deformed and Plain Billet-Steel for Concrete Reinforcement.
- G. ASTM C33 - Concrete Aggregates.
- H. ASTM C94 - Ready Mixed Concrete.
- I. ASTM C150 - Portland Cement.
- J. ASTM C260 - Air-Entraining Admixtures for Concrete.
- K. ASTM C309 - Liquid Membrane-Forming Compounds for Curing Concrete.
- L. ASTM C494 - Chemical Admixtures for Concrete.

1.04 QUALITY ASSURANCE
- A. Perform work in accordance with ACI 301.
- B. Obtain materials from same source throughout.

1.05 REGULATORY REQUIREMENTS
- A. Conform to applicable code for paving work on public property.

1.06 TESTS
- A. Testing and analysis will be performed under provisions of Document 01410.
- B. Submit proposed mix design to Engineer for review prior to commencement of work.
- C. Testing firm will take cylinders and perform slump and air entrainment tests in accordance with ACI 301.
- D. Tests of cement and aggregates will be performed to ensure conformance with requirements stated herein.
- E. Three (3) concrete test cylinders will be taken for every 100 or less cubic yards (CY) of concrete placed each day.
- F. One additional test cylinder will be taken during cold weather and be cured on site

under same conditions as concrete it represents.

G. One (1) slump test will be taken for each set of test cylinders taken.

1.07 SUBMITTALS

A. Submit product data under provisions of Document 01300.
B. Include data on joint filler, admixtures, and curing compounds.
C. Submit manufacturer's instructions under provisions of Document 01300.

PART 2 - PRODUCTS

2.01 CONCRETE MATERIALS

A. Cement: ASTM C150 Normal-Type I Portland type, gray color.
B. Fine and Coarse Aggregates: ASTM C33.
C. Water: Clean and not detrimental to concrete.

2.02 FORM MATERIALS

A. Conform to ACI 301.
B. Joint Filler: ANSI/ASTM D1752-60T, type 2; 0.75 inch thick, manufactured by Shepler or approved equal.

2.03 REINFORCEMENT

A. Reinforcing Steel: ASTM A615; 60 KSI yield grade; deformed billet steel bars.
B. Welded Steel Wire Fabric: Plain type, ANSI/ASTM A185; in flat sheets; or coiled rolls; uncoated finish.
C. Tie Wire: Annealed steel, minimum 16 gage size.
D. Load transmission devices for expansion joints shall be of 3/4-inch finished thickness class A redwood, an approved metal brace or device and 18-inch long steel dowel thru the center of the redwood on 12-inch centers. The dowels shall be 1-inch in diameter for pavement thicknesses up to and including 8-inches and 1-1/4-inch diameter for pavement thicknesses of 9-inches or more. All dowels shall be deformed on one end. Each approved metal brace or device shall be attached and shall hold the dowel firmly to the redwood board. On one side of the redwood, the dowel bar shall be completely capped or sheathed to prevent bonding to the concrete to provide for expansion. On the other side, it shall be fixed to the approved metal brace or device ensuring a position perpendicular to the redwood and parallel to the proposed slab to deter bending, bearing and shearing stresses.
E. Tie bars are to be minimum 5/8-inch diameter, Grade 40, steel and minimum 30-inches in length and spaced maximum 48-inches center to center.
F. Metal devices for expansion and contraction joint assemblies, (such as welded wire bar chains, bar stakes, end marker channels, etc.) shall be as shown on the drawings or may be similar devices of equivalent or greater strength, approved by the Engineer, that will secure the joint assembly in correct position during the placing and finishing of concrete. The Contractor shall have an option of using a metal winged plate or a flat metal plate.

2.04 ACCESSORIES

A. During Compound: ASTM C309, Type 1-D, Class B with Dye, manufactured by Sheplers, Shepcure THD Type 1R with dye.

2.05 ADMIXTURES

A. Air Entrainment: ASTM C260.
B. Chemical Admixture: ASTM C494, Type D water reducing and retarding

2.06 CONCRETE MIX
A. Mix concrete in accordance with ASTM C94.
B. Provide concrete for paving of the following characteristic:
- Compressive Strength at 28 days: 4,000 PSI
C. Use accelerating admixtures in cold weather only when approved by Engineer. Use of admixtures will not relax cold weather placement requirements.
D. Use set-retarding admixtures during hot weather only when approved by Engineer.
E. All concrete shall be air entrained.

PART 3 - EXECUTION

3.01 INSPECTION
A. Verify compacted subgrade, granular base, or stabilized soil is ready to support paving and imposed loads.
B. Verify gradients and elevations of base are correct.
C. Beginning of installation means acceptance of existing conditions.

3.02 PREPARATION
A. Moisten base to minimize absorption of water from fresh concrete.
B. Notify Engineer minimum 24 hours prior to commencement of concreting operations.

3.03 FORMING
A. Place and secure forms to correct location, dimension, and profile.
B. Assemble formwork to permit easy stripping and dismantling without damaging concrete.
C. Place joint fillers vertical in position, in straight lines. Secure to formwork during concrete placement.

3.04 REINFORCEMENT
A. Place reinforcement at slab thickness/3 from top of slabs-on-grade.
B. Interrupt reinforcement at expansion joints.
C. Place reinforcement to achieve slab and curb alignment as detailed.
D. Provide dowelled joints at interruptions of concrete with one end of dowel set in capped sleeve to allow longitudinal movement.

3.05 JOINTS
A. Place control joints at 20 foot intervals to correct elevation and profile. Align curb, gutter, and sidewalk joints.
B. Place joint filler between paving components and building or other appurtenances. Recess top of filler 0.5 inch and place sealant. Sealant shall be 1 component, Polyurethane type, FS TT-S-0023C, Sikaflex-1a by Shepler's or approved equal.
C. All contraction and longitudinal joints that are not at the edge or end of a pour shall be saw cut. Metal or fiber strips placed in the uncured concrete will not be permitted. The joints shall be sawed as soon as sawing can be accomplished without damage to the pavement and as directed by the Engineer. Once sawing has commenced, it shall be continued until completed. The saw cut shall be made with one pass of the concrete saw. Sawing must be accomplished even in rain or cold weather.

D. All sawing must be completed within 24 hours of placement, should the sawing for any days placement fail to be completed within 24 hours, the following concrete placement shall be limited to the amount that was sawed on time. This limitation shall continue until the sawing crew demonstrates it can handle a larger volume of sawing.
   1. The sawed cut shall be a minimum 1/4 inch width and have a depth of one-fourth the thickness of the pavement. Joint sealant installation shall be 1/8" below the top of pavement grade.
E. Provide scored joints at four (4) feet intervals of sidewalk.

3.06 PLACING CONCRETE
A. Place concrete in accordance with ACI 301.
B. Hot Weather Placement: ACI 301.
C. Cold Weather Placement: ACI 301.
D. Ensure reinforcement, inserts, embedded parts, formed joints and manholes are not disturbed during concrete placement.
E. Place concrete continuously between predetermined construction joints. Do not break or interrupt successive pours such that cold joints occur.
F. Place concrete to pattern indicated. When indicated on the drawings, saw cut contraction joints 3/16 inch wide at an optimum time after finishing. Cut 1/3 into depth of slab.

3.07 FINISHING
A. Paving: Light broom.
B. Sidewalk Paving: Light broom, radiused and trowel joint edges.
C. Curbs and Gutters: Light broom.
D. Place curing compound on exposed concrete surfaces immediately after finishing. Apply in accordance with manufacturer's instructions.

3.08 FIELD QUALITY CONTROL
A. Field inspection and testing will be performed under provisions of Document 01400.
B. Maintain records of placed concrete items. Record date, location of pour, quantity, air temperature, and test samples taken.

3.09 PROTECTION OF PAVEMENT:
A. The Contractor shall erect and maintain the barricades required by the plans, and such other barricades and approved devices as will exclude public traffic and traffic of his employees and agents from the newly placed pavement for the periods of time hereinafter prescribed.
B. Portions of the roadway, or crossings of the roadbed required to be maintained open for use by traffic, shall not be obstructed by the above required barricades. Crossings of the pavement required by plans, or by construction sequence, during the period prior to opening to traffic as herein specified, shall be provided with an adequate and substantial bridge, approved by the Engineer.
C. New pavement sections shall be closed to all traffic, both PUBLIC and CONSTRUCTION, until the concrete has attained a minimum compressive strength of at least three thousand pounds per square inch (3,000 PSI) when tested in accordance with ASTM C78. Normally, the first test is conducted on the 7th day. If the Contractor desires to open the new pavement section to traffic early, an additional set of cylinders must be requested for an early test. If the early test

indicates that the minimum compressive strength requirement has been met, and if all other requirements of this specification have been met, the pavement section can be opened to traffic. If the early test is requested by the Contractor, the cost will be paid by the Contractor. If the early test is requested by the Client, the cost will be paid by the Client.

D. Such opening of a new pavement section, to PUBLIC or CONSTRUCTION traffic, shall in no manner relieve the Contractor from his responsibility of the work. On those sections of pavement to be opened to PUBLIC traffic, the pavement shall be thoroughly cleaned, stable material shall be placed, graded, and compacted against the pavement edge or curb unless specified otherwise, joints shall be sealed and cured, and all required traffic control work shall be performed for the safety of the traffic.

3.10 Backfilling Behind Curbs and In Esplanades.

A. The Contractor is required to backfill behind all curbs and within the esplanade, after completion of the paving operation. The backfill material shall be on-site material having the prior approval of the Engineer. No separate payment shall be made for backfilling behind curbs and in esplanades, but it shall be considered incidental to this item.

3.11 Deficient Pavement Thickness.

A. It is the intent of this specification that the pavement be constructed in strict conformity with the thickness and typical sections shown on plans. Where any pavement is found not so constructed, the following rules relative to adjustment of payment for acceptable pavement and to replacement of faulty pavement shall govern.

B. Prior to final acceptance, the pavement will be cored. One (1) core will be taken at locations selected by the Engineer and tested in accordance with ASTM Method C-174. When measurement of the core from any unit is not deficient more than 0.2 inch from the plan thickness, full payment will be made.

C. If measurement of any core from any unit is deficient more than 0.2 inch but not more than 0.50 inch from the drawing thickness, two additional cores will be taken from the unit and the average of the three cores determined. The two additional cores will be taken such that the unit will be well represented. If the average thickness of the three cores is deficient more than 0.2 inch but not more than 0.50 inch from the plan thickness, an adjusted unit price as provided below, will be paid for in these areas represented by these cores.

Price Adjustments: Concrete Pavement Deficiency

Deficiency of Thickness Determined by Cores in Inches	Proportional Part Contract Price Allowed
0.00 to 0.20	100 Percent
0.21 to 0.30	80 Percent
0.31 to 0.40	72 Percent
0.41 to 0.50	68 Percent
Over 0.50	50 or remove*

*At the option of the Engineer

3.12 Defective Concrete.

A. Any defective concrete discovered, after the forms have been removed, shall be removed immediately and replaced. If the surface of the concrete is bulged, uneven or shows excessive honeycombing or form marks, which in the opinion of the Engineer cannot be repaired satisfactorily, it shall be removed and replaced and no compensation will be allowed for the work or materials.

END OF SECTION

SECTION 02 571

PAVEMENT REPAIR AND RESURFACING

PART 1 - GENERAL

1.01 SECTION INCLUDES

A. Repairing and resurfacing streets, highways, driveways, sidewalks and other pavements that have been cut, broken, or otherwise damaged during construction.

1.02 UNIT PRICES

A. No separate payment will be made for pavement repair and resurfacing under this Section unless included in bid documents and approved in advance by Engineer. Include payment in unit price for work in appropriate sections.

B. Limits for measurement, when included in bid documents, will be as follows:

1. Extend one (1) foot beyond outside trench or shaft walls or trench slopes for utilities and appurtenant structures excavation; or for pavement removed to construct utility appurtenances as indicated on Drawings.
2. Extend one (1) foot beyond outside excavation limits for structural excavation.
3. If removed pavement line is greater than one-half of pavement lane width, replace pavement for full land width or to nearest longitudinal joint, as directed by Engineer.
4. No payment will be made for work outside maximum payment limits indicated on Drawings, or in areas removed or replaced for Contractor's convenience.

PART 2 - PRODUCTS

2.01 MATERIALS

A. Subgrade:

1. Provide new backfill material as required.
2. Provide material for stabilization as required.

B. Base: Provide new base material as required.

C. Pavement: Provide new paving materials as required.

PART 3 - EXECUTION

3.01 PREPARATION

A. Cut pavement one (1) foot wider than width of trench needed to install utilities unless otherwise indicated on Drawings.

B. Edges of existing pavement to remain shall be protected from damage during removals, utility placement, backfill, and paving operations. For concrete pavement, leave and protect minimum of one (1) foot of undisturbed subgrade on each side of trench to support replacement slab.

3.02 INSTALLATION

A. Parking areas, service drives, driveways, and sidewalks: Replace with material equal to or better than existing or as indicated on Drawings.

B. Street pavements and curbs, curbs and gutters: Replace subgrade, base, and surface course with like materials or as indicated on Drawings. Curbs and curbs and gutters shall match existing.

C. For concrete pavement, install size and length of reinforcing steel and pavement thickness indicated on Drawings. Place types and spacing of joints to match existing of as indicated on Drawings.
D. Where existing pavement consists of concrete pavement with asphaltic surfacing, resurface with minimum 2-inch depth asphaltic pavement.
E. Repair state highway crossings in accordance with highway department permit and within 1 week after utility work is installed.

3.03 PROTECTION
A. Maintain all pavement in good condition until completion of Work.
B. Replace pavement damaged by Contractor's operations at no cost to Owner.

END OF SECTION

Section 02633
PRECAST CONCRETE INLETS, HEADWALLS, AND WINGWALLS

PART 1 G E N E R A L

1.01 SECTION INCLUDES

A. Precast concrete inlets for storm sewers, including cast iron frame and plate or grate.
B. Precast concrete headwalls and wingwalls for storm sewers.

1.02 MEASUREMENT AND PAYMENT

A. Unit Prices.

1. Payment for normal depth inlets is on a lump sum basis for each inlet installed.
2. Payment for extra depth inlets is on a vertical foot basis for each foot in excess of normal depth and paid only when extra depth is specified.
3. Payment for headwalls and wingwalls is on a lump sum basis for each headwall and wingwall installed.
4. Payment for junction box and lid is on a lump sum basis for each junction box installed.
5. Payment for inlets and for culvert headwalls and wingwalls includes connection of lines and furnishing and installing frames, grates, rings, and covers.
6. Refer to Article 1.04, Definitions.

B. Stipulated Price (Lump Sum). If the Contract is a Stipulated Price Contract, payment for work in this Section is included in the total Stipulated Price.

1.03 REFERENCES

A. ASTM C 76 - Reinforced Concrete Culvert, Storm Drain, and Sewer Pipe.
B. ASTM C 270 - Specification for Mortar for Unit Masonry.

1.04 DEFINITIONS

A. Normal Depth Type B Inlet: Depth of 2.08 feet (2'-1") plus pipe inside diameter when measured from top of curb beam to flow line of inlet lead.
B. Normal Depth Type BB Inlet: Depth of 2.55 feet (2'-6-5/8") plus pipe inside diameter when measured from curb beam to flow line of inlet lead.
C. Extra Depth Inlet: Specified depth exceeding normal depth for the type inlet used.

1.05 SUBMITTALS

A. Submittal shall conform to requirements of Section 01300 - Submittal Procedures.
B. Submit shop drawings for approval of design and construction details for precast concrete inlets, junction box headwalls, and wingwalls. Precast units differing from the standard designs shown on the Drawings will be rejected unless shop drawing submittals are approved.
C. Submit manufacturers' data and details for frames, grates, rings, and covers.

1.06 STORAGE AND SHIPMENT

A. Store precast units on level blocking. Do not place loads on them until design strength is reached. Shipment of acceptable units may be made when the 28 day strength requirements have been met.

PART 2 P R O D U C T S

2.01 MATERIALS

A. Concrete: Provide concrete for precast machine-made units meeting requirements of ASTM C 76 regarding reinforced concrete, cement, aggregate, mixture, and concrete test. Minimum 28-day compressive strength shall be 4,000 psi.

B. Reinforcing Steel: Place reinforcing steel to conform to details shown on Drawings and as follows:

1. Provide a positive means for holding steel cages in place throughout production of concrete units. The maximum variation in reinforcement position is plus or minus 10 percent of wall thickness or plus or minus 1/2 inch, whichever is less. Regardless of variation, the minimum cover of concrete over reinforcement as shown on the Drawings shall be maintained.
2. Welding of reinforcing steel is not permitted unless noted on the Drawings.

C. Mortar: Conform to requirements of ASTM C 270 Type S using Portland Cement.
D. Miscellaneous metal: Cast-iron frames and plates conforming to requirements of Section 02084 - Frames, Grates, Rings, and Covers.

2.02 SOURCE QUALITY CONTROL

A. Tolerances: Allowable casting tolerances for concrete units are plus or minus 1/4 inch from dimensions shown on the Drawings. Concrete thickness in excess of that required will not constitute cause for rejection provided that such excess thickness does not interfere with proper jointing operations.
B. Precast Unit Identification: Mark date of manufacture and name or trademark of manufacturer clearly on the inside of inlet, headwall, or wingwall.
C. Rejection: Precast units may be rejected for non-conformity with these specifications and for any of the following reasons:

1. Fractures or cracks passing through the shell, except for a single end crack that does not exceed the depth of the joint.
2. Surface defects indicating honeycombed or open texture.
3. Damaged or misshaped ends, where such damage would prevent making a satisfactory joint.

D. Replacement: Immediately remove rejected units from the work site and replace with acceptable units.
E. Repairs: Occasional imperfections resulting from manufacture or accidental damage may be repaired if, in the opinion of Engineer, repaired units conform with requirements of these specifications.

PART 3 E X E C U T I O N

3.01 EXAMINATION

A. Verify lines and grades are correct.
B. Verify compacted subgrade will support loads imposed by inlets.

3.02 INSTALLATION

A. Install inlets, headwalls, and wingwalls complete in place to the dimensions, lines, and grades as shown on the Drawings.
B. Excavate in accordance with requirements of Section 02220 - Excavation.
C. Bed precast concrete units on foundations of firm, stable material shaped to conform to the shape of unit bases.
D. Provide adequate means to lift and place concrete units.

3.03 FINISHES

A. Use a cement-sand mortar mix to seal joints, and fill lifting holes.
B. When the box section of the inlet has been completed, shape the floor of the inlet with mortar to conform to Drawing details.
C. Adjust cast iron inlet plate frames to line, grade, and slope shown on Drawings. Grout frame in place with mortar.

3.04 INLET WATERTIGHTNESS

A. Verify that inlets are free of leaks. Repair leaks in an approved manner.

3.05 CONNECTIONS

A. Connect inlet leads to the inlets as shown on the Drawings. Use jointing material as shown on the Drawings. Make connections watertight.

3.06 BACKFILL

A. Backfill the area of excavation surrounding each completed inlet, headwall, or wingwall according to the requirements of Section 02220 - Excavation and Backfill.

END OF SECTION

SECTION 02 665

WATER TAP AND SERVICE LINE INSTALLATION

PART 1 - GENERAL

1.00 SCOPE

A. This section covers polyvinyl chloride (PVC) water mains including valves, valve boxes blocking fittings, furnished where indicated in the Pipeline Schedule complete with all jointing materials and appurtenances.

1.01 RELATED WORK

A. Item 01000 - Project Requirements
B. Item 02220 - Excavation and Trenching
D. Item 02675 - Disinfection
E. Item 02690 - Pressure and Leakage Tests

1.02 MEASUREMENT AND PAYMENT

A. Item 1400 - Measurement and payment

PART 2 - MATERIALS

2.00 POLYVINYL-CHLORIDE (PVC) PIPE

A. PVC Pressure pipe, 4 inch and larger diameter, to conform to AWWA C-900, Class 150, elastomeric ring joints unless otherwise required.
B. PVC Pressure Pipe, 3 inch and smaller, is to conform to ASTM D1784, and ASTM D 2241, Class 160. Class 160 is 1½ inch, 2 inch, and 3 inch diameters to have elastomeric sealjoints, ASTM D3139 smaller pipe to be solvent welded.

2.01 GATE VALVES

A. Furnish double disc, NRS gate valves conforming to AWWA C-500 valve ends to be of type indicated on drawings, or if not indicated, mechanical joint or hub gasketed appropriate for the connecting piping. M.J. bolt holes to straddle centerline. Underground valves to be provided with 2-inch square operating nut, aboveground with handwheels. Stem seals to be "O" ring. Stem to turn counterclockwise to open. M.J. bolts to be cadmium plated.

2.02 FLUSHING VALVES

A. Flushing valves which are to be furnished and installed shall conform strictly to the requirements of the AWWA C-502 Standards for Dry Barrel Fire Hydrants.
B. Flushing valves shall have two (2) 2 ½" hose nozzles with National Standard Threads; one (1) 4½" pumper nozzle with standard thread specifications and shall be equipped with a pentagonal shaped operating nut measuring 1½" point to flat.
C. Flushing valves shall have 6-inch M.J. shoe connection.

2.03 VALVE BOXES

A. Furnish 5¼" diameter. Lids marked "WATER". All pieces shall be asphalt-dipped. For valves located outside of roadway, Tyler Series 6860 screw type, or equal, to be furnished. For valves located within roadway, Tyler Series 6865 slip type, or equal.

Extensions of proper length to be supplied.

PART 3- EXECUTION

3.00 PIPE HANDLING

A. Pipe shipped to the job shall be properly protected against normal forces during transit from manufacturing site to project site.
B. Contractor shall provide and employ slings, lifting cables, strong backs, etc. as recommended by manufacturer in handling pipe, fittings and appurtenances on the job. Proper care against damage from rough handling shall be exercised at all times. Under no circumstances will pipe for fittings be dropped, nor will pipe be allowed to slam together.
C. Pipe is to be strung only on street right-of-way and easements; water pipe is never to be strung in drainage ditches. Strung pipe shall not be places so as to prevent or unreasonably obstruct access of people or vehicles to residences or to businesses. Loose items such as joint assembly material are not to be left in street right-of-way. Delivery of piping materials is to be scheduled so that pipe is strung a maximum of 2 weeks prior to pipe laying.
D. Particular care is to be taken to avoid damage to pipe that is cement mortar lined.
E. Pipe will be strung so bells or belled couplings face in the direction of laying advancement.

3.01 BEDDING AND PIPE PLACEMENT - Refer to Section 02220.

3.02 JOINT DEFLECTION

A. Joint deflection shall in no case exceed the manufacturer's recommendations. Push-on type joints shall have deflections taken only after pipe is "home". Mechanical type joints to be deflected prior to final tightening.

3.03 THRUST RESISTANCE

A. Responsibility of thrust resistance shall be the responsibility of the contractors.
B. Thrust blocking shall be provided at all fittings. The concrete shall bear on undisturbed firm soil. If unavailable at a particular installation, the absence shall be promptly brought to the Engineer's attention. Place concrete so that joints are left accessible.
C. Restrained Joints - Where flexible joints are shown as "lock" or "restrained", resistive restraint devices capable of being dismantled and with ample ability to transfer the thrust shall be engaged so as to positively prevent pipe separation.

3.04 SETTING UNDERGROUND VALVES, VALVE BOXES AND FLUSHING VALVES

A. Prior to installing valves or flushing valves remove foreign matter from within the valves. Inspect the valves in open and closed positions to verify that all parts are in satisfactory working condition. Refurbish existing valves to be used again, installing new seats and seals and generally repair the valves. Install fully closed.
B. Install valves, valve boxes and flushing valves where shown or as located by the Owner. The gate valves plumb and as detailed on drawings. Center valve boxes on valves. Locate valves away from roads or streets. Carefully tamp earth around each valve box for a minimum radius of 4 feet or to undisturbed trench face if less than 4 feet. Set flushing valve 2 feet from the edge of the right-of-way, such that connecting pipe will not have less cover than distributing mains.
C. Place a concrete thrust block opposite pipe connections, set against the vertical face of the trench to prevent the valve from moving. If the character of the soil is such that the flushing valve cannot be securely wedged in this manner, provide bridle rods

and rod collars of not less than ¾-inch stock protected by a coat of acid-resisting paint.

D. Place pea gravel around the base of flushing valves to ensure drainage. Compact backfill thoroughly around the valve to grade line.

END OF SECTION

SECTION 02 675

DISINFECTION OF WATER LINES

1. DISINFECTION
   A. Disinfection of new water lines shall be in accordance with AWWA C651. Contractor shall make and maintain the necessary excavations and install taps and risers as required. Water for such a purpose shall be furnished without charge to the Contractor except for retesting. Cost for water used by contractor in retesting shall be borne by the Contractor. Should a chemical compound be used for a sterilizing agent, same shall be placed in the pipes as directed by the Engineer.
   B. It shall be the responsibility of the Contractor to furnish all required temporary blind flanges, cast iron sleeves, plugs, etc., to facilitate the chlorination and testing of new mains prior to connecting them to the existing waterlines.

2. BACTERIOLOGICAL TESTS
   A. Contractor shall obtain the services of an approved laboratory to gather representative samples and conduct bacteriological tests. Test results must meet Texas Commission or Environmental Quality (TCEQ) requirements. Make all necessary corrections, repeat sterilization and flushing procedures, and retest affected lines if test results are not acceptable. Repeat this procedure until satisfactory results are obtained.

END OF SECTION

SECTION 02711

LANDSCAPE PLANTING

PART 1 - GENERAL

1.01 DESCRIPTION

A. The WORK under this Section includes providing all labor, materials, tools, and equipment necessary to furnish and install all trees and shrubs called for in the Contract Documents, all in reasonably close conformity with these Specifications and at locations shown on the Drawings or established by the ARCHITECT.

1.02 QUALITY ASSURANCE

A. Installer has technical qualifications, and at least 5 years experience with commercial projects, trained personnel, and facilities to install specified items.

1.03 SUBMITTALS

A. Submit in accordance with Section 01300, Submittals.

B. Provide plant list and indentify planting at nursery location for review and approval by ARCHITECT.

PART 2 - PRODUCTS

2.01 PLANTS

A. Plants shall be nursery-grown unless otherwise specifically permitted in each instance. American Association of Nurserymen Standard ASA Z 60.1 shall apply.

B. Upon completion of the WORK and prior to the final acceptance invoices or written statements from the suppliers showing the name of materials received or shipped, shall be presented to the ARCHITECT for a final check as to conformance to these Specifications.

C. Plant material shall conform to state and federal laws relating to inspection for diseases and insect infestation, and shall conform to the American Standard for Nursery Stock. Plant materials shall be first class representatives of their species or variety.

D. Plants shall have normal, well-developed branches and be densely foliated when in leaf. Plants shall be vigorous and free from defects, disease, insect pests, eggs or larvae, sunscaled, injuries and abrasions of the bark. Plants shall have well-developed root systems.

E. Plants shall be container grown or burlap balled. Freshly dug plants, heeled in plants or plants from cold storage shall not be accepted. Trees that have their leader cut, or are so damaged that cutting is necessary, shall not be accepted.

F. Plants shall not be pruned prior to delivery except upon written approval from the ARCHITECT.

2.02 TREES AND SHRUBS

A. Measurements of trees and shrubs shall be taken when their branches are in normal position. Height and spread dimensions specified refer to the main body of the plant, not from branch or root tip to tip. Caliper of trees shall be taken twelve inches above ground level.

2.03 GROUND COVER

B. Ground cover plants shall be furnished in pots. Unless otherwise specified. The plants shall be at least one year-old, and have been growing in post long enough to ensure sufficient root growth to hold soil in place when removed from the pot.

2.04 PLANT SIZE

A. Plant sizes shall conform to the measurements specified in the plant list. Exceptions are as follows:

1. Plants larger than specified in the plant list may be used if approved. Use of such plants shall not increase the Contract Price. If larger plants are approved, the spread of roots or ball of earth shall be increased in proportion to the increased size of the plant.

2. Up to 10% of undersized plants in any one variety or species may be used, provided that there are sufficient plants above size to make the average equal to or above specified grade. Acceptable undersize plants shall be larger than average size of the next smaller grade.

2.05 SUBSTITUTIONS

A. Substitutions will be permitted only if proof is submitted that specific plants or sizes are unobtainable. A proposal will be considered for the nearest equivalent size or variety with equitable adjustment of Contract Price.

2.06 BALLED AND BURLAPPED PLANTS

A. Balled and burlapped plants shall be contained in firm natural balls of earth, of sufficient diameter and depth to include all fibrous and feeding roots. Plants in which the ball has bee broken or cracked, either before or during planting operations, will not be accepted.

B. Balled and burlapped plants which cannot be planted immediately upon delivery shall be set on the ground and shall be well protected with soil, wet peat moss, wet sawdust, or wet ground bark.

C. Roots or balls of plants shall be protected from sun and drying winds.

D. Bundles of plants shall be opened and the plans separated before the roots are covered. Care shall be taken to prevent air pockets among the roots. During plating operations, bare roots shall be covered with canvas, hay, or other approved material.

2.07 PLANTING SOIL

A. Planting soil shall be composed of a mixture of one part topsoil and one part rotted manure or peat.

2.08 FERTILIZER

A. Fertilizer shall be a standard commercial grade of organic or inorganic fertilizer containing the following percentage of total nitrogen, available phosphoric acid and water soluble potash: 14-14-14, furnished in standard unopened containers with weight, name of plant nutrients, and manufacturer's guaranteed statement of analysis clearly marked in accordance with state and federal laws. Fertilizer shall be Osmocote 14-14-14, or approved equal.

2.09 MULCH

A. Mulch shall be ground fir, spruce, or hemlock, free from weed seeds, tannin, or other compounds detrimental to plant life. Mulch shall have a size range of one-fourth to oneinch, with a maximum of 50% passing a one-half-inch screen.

PART 3 - EXECUTION

3.01 PLANTING SEASONS

A. All planting shall be performed between May 1 and August 15, unless otherwise authorized in writing by the ARCHITECT.

3.02 LAYOUT OF PLANT MATERIAL

A. The ARCHITECT will stake the location of all planting pits.

3.03 INSPECTION OF PLANT MATERIAL

A. Plants shall be subject to inspection and approval upon delivery as to size, quality, species, and variety. Approval shall not impair the right of inspection and rejection upon delivery at the site or during the progress of the WORK, for reasons of size, condition of ball or roots, diseases, insects, latent defects, or injuries. Plants that meet the measurements specified, but do not possess a normal balance between height and spread, shall be rejected. Rejected plants shall be removed from the site immediately.

3.04 PLANNTING PITS

A. Excavate circular pits with vertical sides to a diameter at least two feet greater than the rootball and at least one foot greater in depth. Before any planting is done, the ARCHITECT shall be notified of any soil conditions detrimental to the growth of plant materials that are encountered when excavating planting pits.

3.05 PLACEMENT AND BACKFILL

A. Before plant placement, thoroughly mix fertilizer (Osmocote 14-14-14, or approved equal) with planting soil at the rate of one pound of fertilizer per ten cubic feet of planting soil. Backfill pit with one foot of planting soil or until original root crown soil line is flush with, or slightly above, finished grade when plant is set in pit. Place plant in center of pit in upright position. When pit has been backfilled approximately two thirds full, water thoroughly, saturating rootball and eliminating all air pockets. Complete backfill around rootball with soil mixture and bring to finish grade while flooding with water. After backfilling, apply fertilizer (Osmocote 14-14-14, or approved equal) to surface around periphery of plant rootballs at the rate of ten pounds per 1,000 square feet.

3.06 TREE STAKING

A. Stake all trees as recommended by the supplier.

3.07 PRUNING

A. Pruning shall be done in accordance with standard horticultural practice to preserve the natural character of the plant.

3.08 MULCHING

A. All planting pits shall be mulched to a two inch depth in a 30-inch circle. Mulch shall be applied within two days after planting.

3.09 MAINTENANCE

A. Maintenance of all plants shall be required from the time of planting until the initial acceptance. Maintenance shall include watering, weeding, tightening and repairing of guys, resetting plants to proper grades or upright position and removal of dead materials.

B. No plants will be accepted unless they show a healthy growth and satisfactory foliage condition.

3.10 GUARANTEE

A. The CONTRACTOR shall provide 100% replacement guarantee for a period of one year, beginning at the date of Substantial Completion. At the end of the guarantee period and upon written request from the CONTRACTOR, the ARCHITECT will make final inspection. The ARCHITECT will ensure the plants are health, showing satisfactory growth and, in general, show signs of developing into healthy, mature representatives of their species. The CONTRACTOR shall remove and replace promptly any plant material that is dead or not showing satisfactory growth.

B. Any necessary repairs under the guarantee shall be made within thirty days after receiving notice of need, weather permitting. In the event the CONTRACTOR does not make repairs accordingly, the OWNER, without further notice, may provide materials and labor to make such repairs at the expense of the CONTRACTOR. The replacement shall be on the same variety, size and character as specified for original planting. If approved by the ARCHITECT, trees may be replanted at start of next year's planting season. In such cases, the CONTRACTOR shall remove dead trees immediately.

END OF SECTION

SECTION 02 720
STORM SEWERS

PART 1 - GENERAL

1.01 SECTION INCLUDES

A. Storm sewers and appurtenances.

1.02 MEASUREMENT AND PAYMENT

A. UNIT PRICES

1. Measurement for storm sewers is on a linear foot basis for each type and size of pipe installed. Measurement will be taken along the center line of the pipe from center line to center line of manholes or from end to end of culverts.
2. No separate payment will be made for earthwork, connections to existing manholes and pipe, accessories, equipment and execution required or incidental to storm sewer work. Include payment in unit price for pipe.

B. STIPULATED PRICE (LUMP SUM). If the Contract is a Stipulated Price Contract, payment for work in this Section is included in the total Stipulated Price.

1.03 REFERENCES

A. ASTM C 76 - Reinforced Concrete Culvert, Storm Drain, and Sewer Pipe.
B. ASTM C 443 - Joints for Circular Concrete Sewer and Culvert Pipe.
C. ASTM F 477 - Specification for Elastomeric Seals (Gaskets) for Joining Plastic Pipe.
D. ASTM C 497 - Method of Testing Concrete Pipe, Sections, or Tile.
E. ASTM C 506 - Reinforced Concrete Arch Culvert, Storm Drain and Sewer Pipe
F. ASTM C 507 - Reinforced Concrete Elliptical Culvert, Storm Drain and Sewer Pipe.
G. ASTM D 618 - Practice for Conditioning Plastics and Electrical Insulating Materials for Testing.
H. ASTM C 655 - Reinforced Concrete D-load Culvert, Storm Drain and Sewer Pipe.
I. ASTM F 714 - Specification for Polyethylene Plastic (PE) Pipe (SDR-PR) Based on Outside Diameter.
J. ASTM C 822 - Standard Definitions and Terms Relating to Concrete Pipe and Related Products.
K. ASTM C 877 - Standard Specification for External Sealing Bands for Non circular Concrete Sewer, Storm Drain, and Culvert Pipe.
L. ASTM F 894 - Specification for Polyethylene Plastic (PE) Large-diameter Profile Wall Sewer and Drain Pipe.
M. ASTM D 1248 - Specification for Polyethylene Plastics Molding and Extrusion Materials.
N. ASTM D 2657 - Standard Practice for Heat -Joining Polyolefin Pipe and Fittings.
O. ASTM D 3212 - Specification for Joints for Drain and Sewer Plastic Pipes Using Flexible Elastomeric Seals.
P. ASTM D 3350 - Specification for Polyethylene Plastic Pipe and Fittings Materials.

1.04 SUBMITTALS

A. Submittals shall conform to requirements of Section 01300 - Submittal Procedures.
B. Submit complete product data for pipe, fittings and gaskets for approval. Indicate conformance to appropriate reference standards.
C. Submit certificates by a testing laboratory, hired and paid by the manufacturer, that concrete

pipes meet applicable standards when tested in accordance with ASTM C 497.

1.05 QUALITY ASSURANCE

A. The condition for acceptance will be a storm sewer that is watertight both in pipe-to-pipe joints and in pipe-to-manhole connections.

1.06 PRODUCT DELIVERY, STORAGE AND HANDLING

A. Comply with manufacturer's recommendations.
B. Handle pipe, fittings, and accessories carefully with approved handling devices. Do not drop or roll pipe off trucks or trailers. Materials cracked, gouged, chipped, dented, or otherwise damaged will not be approved for installation.
C. Store pipe and fittings on heavy timbers or platforms to avoid contact with the ground.
D. Unload pipe, fittings, and specials as close as practical to the location of installation to avoid unnecessary handling.
E. Keep interiors of pipe and fittings completely free of dirt and foreign matter.

PART 2 PRODUCTS

2.01 PIPE

A. Piping materials for storm sewers shall be of the sizes and types indicated on the Drawings.
B. Materials for pipe and fittings, other than those specified or referenced, may be considered for use in storm sewers.
C. For consideration of other materials, submit complete manufacturer's data including materials, sizes, flow carrying capacity, installation procedures, and history of similar installations to Engineer for pre-bid evaluations, if allowed, or as a substitution.

2.02 PIPE MATERIAL SCHEDULE

A. REINFORCED CONCRETE PIPE

1. Circular reinforced concrete pipe shall conform to requirements of ASTM C 76, for Class III wall thickness. Joints shall be rubber gasketed conforming to ASTM C 443.
2. Reinforced concrete arch pipe shall conform to the requirements of ASTM C 506 for Class A-III. Joints shall conform to ASTM C 877.
3. Reinforced concrete elliptical pipe, either vertical or horizontal, shall conform to the requirements of ASTM C 507 for Class VE-III for vertical or Class HE-III for horizontal. Joints shall be rubber gaskets conforming to ASTM C 877.
4. Reinforced concrete D-load pipe shall conform to the requirements of ASTM C 655.

B. HDPE PIPE:

1. Provide HDPE pipe as follows:

WALL CONSTRUCTION	MANUFACTURER	PRODUCT OPTIONS	ASTM REF	PIPE STIFFNESS (MIN)	DIAMETER RANGE (INCHES)
Solid Wall	Drisco 1000 Drisco 8600 Quail Pipe Poly Pipe Plexco	Approved	F714	115 psi	8 to 10
				46 psi	12 to 48

WALL CONSTRUCTION	MANUFACTURER	PRODUCT OPTIONS	ASTM REF	PIPE STIFFNESS (MIN)	DIAMETER RANGE (INCHES)
Profile Wall	Spirolite	Pre-approved	F894	46 psi	18 to 120

2. Solid wall pipe shall be produced with plain end construction for heat-joining (butt fusion) conforming to ASTM D 2657. Utilize controlled temperatures and pressures for joining to produce a fused leak-free joint.
3. Furnish profile-wall gravity sewer pipe with bell-and-spigot end construction conforming to ASTM D 3212. Joining will be accomplished with an elastomeric gasket in accordance with the manufacturer's recommendations. Use integral bell-and-spigot gasketed joint designed so that when assembled, the elastomeric gasket, contained in a machined groove on the pipe spigot, is compressed radially in the pipe bell to form a positive seal. Also have joint designed to avoid displacement of the gasket when installed in accordance with the manufacturer's recommendations.
4. HDPE pipe is not approved in applications requiring augering of sewer pipe.
5. Pipe and Fittings: High density, high molecular weight polyethylene pipe material meeting the requirements of Type III, Class C, Category 5, Grade P34, as defined in ASTM D 1248. Material meeting the requirements of cell classification in accordance with ASTM D 3350 are also suitable for making pipe products under these specifications.

C. GASKETS

1. When no contaminant is identified, furnish rubber gasket conforming to ASTM C 443 for circular reinforced concrete pipe and rubber gasket conforming to ASTM C 877 for reinforced concrete elliptical pipe.
2. Pipes to be installed in potentially contaminated areas, especially where free product is found near the elevation of the proposed sewer, shall have the following gasket materials for the noted contaminants:

CONTAMINANT	**GASKET MATERIAL REQUIRED**
Petroleum (diesel, gasoline)	Nitrile Rubber
Other Contaminants	As recommended by the pipe manufacturer

D. Lubricant. Use a lubricant for assembly of gasketed joints which has no detrimental effect on the gasket or on the pipe, in accordance with manufacturer's recommendations.

2.03 BEDDING, BACKFILL, AND TOPSOIL MATERIAL

A. Bedding and Backfill Material: Conform to requirements of Sections 02220 - Excavation, Trenching, Fill and Backfill for Utilities.
B. Topsoil: Conform to requirements of Section 02931 - Topsoil.

PART 3 - EXECUTION

3.01 PREPARATION

A. Set up street detours and barricades in preparation for excavation if construction will affect traffic.

B. Provide barricades and warning lights and signs, for excavations. Maintain barricades and warning lights for streets and intersections where work is in progress or where affected by the work and is considered hazardous to traffic movements.
C. Perform work in accordance with OSHA standards. Employ a Trench Safety System as specified in Section 02161 - Trench Safety Systems for excavations over 5 feet deep.
D. Immediately notify the agency or company owning any utility line which is damaged, broken or disturbed. Obtain approval from Engineer and agency for any repairs or relocations, either temporary or permanent.

3.02 EXCAVATION

A. Earthwork. Refer to Section 02220 - Excavation, Trenching, Fill and Backfill for Utilities and as directed on Drawings.
B. Line and Grade. Establish the proper line and grade in the trench from stakes set by the Engineer. Maintain this control for a minimum of 100 feet behind and ahead of the pipe-laying operation. Use appropriately sized grade boards, as necessary, which are substantially supported. Protect the boards and location stakes from damage or dislocation. Use of a laser beam equipment to establish and maintain proper line and grade of the work is acceptable.
C. Trench Excavation. Excavate pipe trenches to a level 8-inches below the indicated invert. Backfill the excavation with the specified bedding material to the level of the lower one-third of the pipe barrel. Tamp and compact backfill to provide bedding at the indicated grade. Form the bedding foundation to a minimum depth of one-eighth of the pipe diameter, but not less than 6 inches.

3.03 PIPE INSTALLATION

A. Install in accordance with the pipe manufacturer's recommendations and as specified in this Section.
B. Install pipe only after excavation is completed, the bottom of the trench shaped, bedding material is installed, and the trench has been approved by the Engineer.
C. Install pipe to the line and grade indicated. Place pipe so that it has continuous bearing of barrel on bedding material and is laid in the trench so the interior surfaces of the pipe follow the grades and alignments indicated.
D. Install pipe with the spigot ends toward the direction of flow.
E. Form a concentric joint with each section of adjoining pipe so as to prevent offsets.
F. Place and drive home newly laid sections with come-a-long winches so as to eliminate damage to sections. Use of back hoes or similar powered equipment will not be allowed unless protective measures are provided and approved in advance by Engineer.
C. Keep the interior of pipe clean as the installation progresses. Where cleaning after laying the pipe is difficult because of small pipe size, use a suitable swab or drag in the pipe and pull it forward past each joint immediately after the joint has been completed.
D. Keep excavations free of water during construction and until final inspection.
E. When work is not in progress, cover the exposed ends of pipes with an approved plug to prevent foreign material from entering the pipe.

3.04 PIPE INSTALLATION OTHER THAN OPEN CUT

A. Not Required.

3.05 INSTALLATION OF APPURTENANCES

A. Install headwalls and wingwalls to conform to requirements of Section 02633 - Precast Concrete Inlets, Headwalls and Wingwalls.

3.06 PIPE LEAKAGE TEST

A. All storm sewers will be visually inspected where feasible, and tested for leakage using low pressure air in accordance with Section 02732 - Acceptance Testing for Sanitary Sewers.

3.07 BACKFILL AND SITE CLEANUP

A. Backfill the trench only after pipe installation is approved by the Engineer.
B. Bed pipes with materials conforming to requirements of Section 02220 - Bedding and Backfill Material and as indicated on Drawings.
C. Backfill and compact soil in accordance with Section 02220 - Excavation, Trenching, Fill and Backfill for Utilities.
D. Repair and replace removed or damaged pavement and sidewalks as specified in Section 02571 - Pavement Repair and Resurfacing.
E. In unpaved areas, grade surface as a uniform slope to natural grade as indicated on the Drawings. Provide a minimum of 4 inches of topsoil and seed according to requirements of Section 02931 - Seeding.

END OF SECTION

SECTION 02 731

SANITARY SEWER FORCE MAINS

PART 1 - GENERAL

1.01 SECTION INCLUDES
- A. Sanitary sewage force mains.

1.02 UNIT PRICES
- A. Measurement for force mains is on a linear foot basis, taken along the center line for each type and size of pipe installed.
- B. No separate payment will be made for shoring, dewatering, earthwork, ground water barriers, pipe coating, cathodic protection, pipe embedment, thrust resistance, pavement repair, erosion protection, cleanup, testing and other appurtenant work not covered under other payment items.
- C. When a line is to be placed in a bored or cased hole, the payment for the work shall consist of two items, (1) the sewer pipe or force main in place, and (2) the "bore" or the "bore and case" items.

1.03 SUBMITTALS - NOT REQUIRED

1.04 QUALITY ASSURANCE
- A. Sanitary sewer force main shall be tested in accordance with 3.06 - Inspection and Testing.
- B. Regulatory Requirement.
  1.Install sewer lines to meet the minimum separation distance from any potable water line, as required by the Texas Commission of Environmental Quality (TCEQ) , Chapter 317 - Design Criteria for Sewerage Systems - §317.13 - Appendix E.
  2. Make notification to the Engineer if water lines are uncovered during sanitary sewer installation where the minimum separation cannot be maintained.

1.05 PRODUCT DELIVERY
- A. Inspect pipe and fittings upon arrival of materials at the job site.
- B. Handle and store pipe materials and fittings to protect them from damage.

PART 2 - PRODUCTS

2.01 MATERIALS
- A. Materials for pipe and fittings other than those specified may be considered for use in force mains.

2.02 PVC PIPE FORCE MAIN
- A. PVC Pressure Pipe, 3 inch and smaller, is to conform to ASTM D1784, and ASTM D 2241, Class 160. Class 160 is 1½ inch, 2 inch, and 3 inch diameters to have elastomeric seal joints, ASTM D3139 smaller pipe to be solvent welded.
- B. PVC Pressure pipe, 4 inch and larger diameter, to conform to AWWA C-900, Class 150, elastomeric ring joints unless otherwise required.

C. All pipe and fitting joints shall be integral bell and spigot, containing a bonded-in elastomeric sealing ring meeting the requirements of ASTM F477. In designated areas requiring restrained joint pipe and fittings.

2.03 CONCRETE THRUST BLOCKING

A. Blocking to prevent movement of lines under pressure at bends, tees, caps, valves and hydrants shall be Portland cement concrete. Concrete shall have a minimum compressive strength of 2,000 PSI at 28 days. Place concrete in accordance with details on the Drawings. Place thrust blocks between undisturbed ground and the fittings. Anchor them so that pipe and fitting joints are accessible for repairs. Concrete shall extend from 6-inches below the pipe or fitting to 12-inches above.

B. Horizontal and vertical bends between zero and 10 degrees deflection angle will not require thrust blocks or harnessed or restrained joints.

C. Horizontal and vertical bends between 10 and 90 degrees deflection angle shall have concrete thrust blocks as shown on the Drawings.

D. All tees, plugs, bluff drains, valves and caps shall have concrete thrust blocks as indicated.

2.04 BEDDING, BACKFILL, AND TOPSOIL MATERIAL

A. Bedding shall be bank sand.

B. Backfill shall be cement stabilized sand (1½ sack/ton) for backfill when excavation is a distance of five feet or less from existing pavement. For excavations greater than five feet, native material shall be used.

C. Topsoil shall be native material as determined by Engineer.

2.05 REINFORCED DETECTABLE MARKING TAPE

A. Color code. Product shall conform to AWPA color code specifications for underground marking tape systems:
   a. Red - Electrical power distribution and transmission liners.
   b. Yellow - Oil and Gas distribution and transmission liners, dangerous material product lines and steam lines.
   c. Blue - Water and Sewer lines.
   d. Orange - telephone, cable television, police and fire communication lines.

B. Product
   1. Product shall possess high strength and puncture resistance in accordance to above referenced ASTM standards.
   2. Material and marking ink shall not change when exposed to acids or other destructive substances commonly found in soil.

C. Installation
   1. Provide 6" reinforced detectable tape for use in the protection and location of underground piping and cables.
   2. Place marking tape parallel to the piping at a depth between 18" and 24".
   3. The inductive method shall be used to locate detectable marking tape with no splicing or electrical connections between rolls required.

D. Acceptable Products
   1. “Terra Tape Sentry line 1350", Reef Industries.

PART 3 - EXECUTION

3.01 PREPARATION

A. Prepare traffic control plans and set up street detours and barricades in preparation for excavation if construction will affect traffic.
B. Provide barricades and flashing warning lights and signs for excavations. Maintain barricades and warning lights where work is in progress or where affected by the work.
C. Perform work in accordance with OSHA standards. Employ a Trench Safety System for excavations over 5 feet deep.
D. Immediately notify the agency or company owning any utility line which is damaged, broken or disturbed. Obtain approval from Engineer and agency for any repairs or relocations, either temporary or permanent.
E. Remove old pavements and structures including sidewalks and driveways when required.
F. Install and operate dewatering and surface water control measures when required.
G. Wrap ductile-iron pipe and fittings with polyethylene wrap in accordance with Drawings if required.

3.02 EARTHWORK

A. Bedding: Provide 4" layer minimum of uniform compacted bank sand bedding for pipe.
B. Embedment: Provide uniform compacted bank sand in the pipe zone to 4" above top of pipe.
C. Groundwater Barriers: All 500' intervals provide a 3' wide ground water barrier consisting of a low permeability material to impede passage of water through the bedding and embedment. Material shall have a solid classification GC, SC, CL or ML-CL and shall be compacted to 95% Standard Proctor. Material may be finely divided suitable for excavated material, free from stones, organic material and debris.

3.03 PIPE INSTALLATION BY OPEN CUT

A. Install pipe in accordance with the recommended practice for installation of PVC Pipe (UNI-B-5).
B. Keep excavations free of water during construction and until final inspection.
C. When work is not in progress, cover the exposed ends of pipes with an approved plug to prevent foreign material from entering the pipe.
D. Detection tape shall be installed as specified in Section 2.06.

3.04 PIPE INSTALLATION OTHER THAN OPEN CUT

A. Boring: For installation of pipe by auguring or boring, utilize water only for lubrication. Use a two (2) inch pilot hole for alignment and grade. Follow with matching bore or mandrel of the size required. Bored hole shall not be more than one (1) inch greater than the outside diameter of the pipe bell. All joints of pipe in the hole shall be made up prior to the pipe entering the bore.
B. Casing: Carbon steel pipe, standard wall, shall be used for casing the bore where required on the Drawings. Joints shall be welded.

3.05 TESTING OF SANITARY SEWER FORCE MAINS

A After the pipe and appurtenances have been installed and before covering, test line and drain. Prevent damage to the Work or adjacent areas. Use clean water to perform tests.

B. Test pipe in the presence of Engineer or Engineer's representative; conform to minimum requirements of 31 TAC 317.3.
C. All force mains shall have a minimum sustained working pressure rating of 150 psig.
D. Test pipe at 90 psig or 1.5 times design pressure of the pipe, whichever is greater. Design pressure of the force main shall be rated total dynamic head of the lift station pump.
E. Test pipe at the required pressure for a minimum of 2 hours according to requirements of UNI-B-3.
F. Leakage shall be defined as the quantity of water that must be supplied into the test section to maintain pressure within 5 psi of the specified test pressure after the air in the line has been removed. Maximum allowable leakage shall be calculated by the following formula:

$L = (S)(D)(P^{0.5}) / 133{,}200$

where:

L = Leakage in gallon per hour (gph).
S = Length of pipe in feet.
D = Inside diameter of pipe in inches.
P = Pressure in pounds per square inch.

G. Copies of all tests should be submitted to Engineer.
H. Correct defect, cracks or leakage by replacement of defective items or by repairs as approved by Engineer.

3.07 BACKFILL AND SITE CLEANUP

A. Upon completion of the work and testing, the Contractor shall restore/clear the project area affected by his operations. No trash, rubbish, etc., shall be stored at any site, whether the work is in progress or not.
B. Backfill with native material to 85% Standard Proctor.
C. Replace pavement removed for excavation:
   1. Provide minimum 2-inch HMAC pavement on 12-inches of well compacted limestone base for asphalt surfaces. Subgrade shall be cement stabilized sand (1½ sack/ton) compacted in 6-inch layers to 95% Standard Proctor.
   2. Provide minimum 7-inch concrete pavement on cement stabilized sand (1½ sack/ton) compacted in 6-inch layers to 95% Standard Proctor. Dowel #5 bars a minimum depth of 4-inches into all existing concrete faces. Continuous reinforcement (#5@12" EW) and 4,000 psi concrete shall be placed to seal excavation.
D. In unpaved commercial, industrial or undeveloped areas, grade surface at a uniform slope to natural grade as indicated on the Drawings.

END OF SECTION

SECTION 02 732

ACCEPTANCE TESTING FOR SANITARY SEWERS

PART 1 - GENERAL

1.01 SECTION INCLUDES

A. Acceptance testing of sanitary sewers including:
   1. Visual inspection of sewer pipes.
   2. Deflection testing for flexible sewer pipes.
   3. Leakage testing of sewer pipes.
   4. Television inspections.

1.02 UNIT PRICES

A. No payment will be made for acceptance testing under this Section. Include payment in unit price for related Section.

1.03 PERFORMANCE REQUIREMENTS

A. Gravity flow sanitary sewers are required to have a straight alignment and uniform grade between manholes.
B. Flexible pipe is required to show no more than 5 percent deflection. Test pipe no sooner than 30 days after backfilling of line segment but prior to final acceptance using a standard mandrel to verify that installed pipe is within specified deflection tolerances.
C. The maximum allowable leakage per mile of sewer is 50 gallons per 24 hours for each inch of diameter. Perform leakage testing to verify that leakage criteria are met.

1.04 SUBMITTALS

A. Test Reports: Submit test reports for each test on each segment of sanitary sewer.
B. Video Reports: Submit video tapes of line survey and post-completion television inspection of gravity sanitary sewers with each monthly pay estimate.

1.05 QUALITY ASSURANCE

A. Repair, correct and retest manholes or sections of pipe which fail to meet specified requirements when tested.
B. Provide testing reports and video tape of television inspections. Tape quality shall be acceptable to Engineer.
C. Upon completion of tape reviews by Engineer, Contractor will be notified regarding final acceptance of the sewer segment.

1.06 SEQUENCING AND SCHEDULING

A. Perform testing as work progresses. Schedule testing so that no more than 1,000 linear

feet of installed sewer remains untested at any one time.

PART 2 - PRODUCTS

2.01 DEFLECTION MANDREL

A. Mandrels: The Contractor shall provide a prefabricated full circle mandrel and furnish the manufacturer's certificate that the mandrel meets the required minimum outside diameter.

2.02 EXFILTRATION TEST

A. Test Equipment: Pipe plugs and pipe risers where the manhole cone is less than 2 feet above the highest point in the pipe or service lead.

2.03 INFILTRATION TEST

A. Test Equipment: Pipe plugs and pipe risers where the manhole cone is less than 2 feet above the highest point in the pipe or service lead.

2.04 LOW PRESSURE AIR TEST

A. Minimum Requirement fro Equipment:
   1. Low-pressure air supply connected to control panel.
   2. Pneumatic plugs: Acceptable size for diameter pipe to be seated; capable of withstanding internal test pressure without leaking or requiring external bracing.
   3. Air hoses from control panel to air supply, pneumatic plugs, sealed line for pressuring, and sealed line for monitoring internal pressure,
B. Testing Pneumatic Plugs: Place a pneumatic plug in each end of a length of pipe on the ground. Pressurize plugs to 25 psig; then pressurize sealed pipe to 5 psig. Plugs are acceptable if they remain against test pressure without external loads.

PART 3 - EXECUTION

3.01 PREPARATION

A. Provide labor, equipment, tools, test plugs, risers, air compressor, air hose, pressure meters, pipe probe, calibrated weirs, or any other device necessary for proper testing and inspection.
B. The selection of test methods and pressures for gravity sanitary sewers shall be determined based on groundwater elevation.

3.02 VISUAL INSPECTION OF GRAVITY SANITARY SEWERS

A. Check pipe alignment visually by flashing a light between structures. Verify if alignment is true and no pipes are misplaced. In case of misalignment or damaged pipe, remove and re-lay or replace pipe segment.

3.03 MANDREL TESTING FOR GRAVITY SANITARY SEWERS

A. Perform deflection testing on flexible and semi-rigid pipe to confirm pipe has no more than 5 percent deflection. Mandrel testing shall conform to ASTM D3034. Perform testing no sooner than 30 days after backfilling of line segment, but prior to final acceptance testing of the line segment.
B. The mandrel shall have a diameter equal to 95 percent of the inside diameter of the pipe,
C. Pull the approved mandrel by hand through sewer sections. Replace any section of sewer not passing the mandrel and retest.
D. Submit test results to Engineer.

3.04 LEAKAGE TESTING FOR GRAVITY SEWERS

A. Test Options:
   1. Test gravity sanitary sewer pipes for leakage by either exfiltration or infiltration methods, as appropriate, or with low pressure air testing.
   2. Test new or rehabilitated sanitary sewer manholes by either exfiltration or vacuum testing.
   3. Leakage testing shall be preformed after backfilling of a line segment, and prior to tie-in of service connections.
B. Exfiltration Test - shall conform to 31 TAC 317.2.a.4.A.
   1. The total exfiltration, as determined by a hydrostatic head test, shall not exceed 50 gallons per inch diameter per mile of pipe per 24 hours at a minimum test head of 2 feet above the crown of the pipe at the upstream manhole.
   2. For construction within the 25-year flood plain, the exfiltration shall not exceed 10 gallons per inch diameter per mile of pipe per 24 hours at the same minimum test head.
   3. If the quantity of exfiltration exceeds the maximum quantity specified, remedial action shall be undertaken in order to reduce the exfiltration to an amount within the limits specified.
C. Infiltration Test - shall conform to 31 TAC 317.2.a.4.A. When pipes are installed below the groundwater level, an infiltration test shall be used in lieu of the exfiltration test.
   1. The total infiltration, as determined by a hydrostatic head test, shall not exceed 50 gallons per inch diameter per mile of pipe per 24 hours at a minimum test head of 2 feet above the crown of the pipe at the upstream manhole, or at least 2 feet above existing groundwater level, whichever is greater.
   2. For construction within the 25-year flood plain, the infiltration shall not exceed 10 gallons per inch diameter per mile of pipe per 24 hours at the same minimum test head.
   3. If the quantity of infiltration exceeds the maximum quantity specified, remedial action shall be undertaken in order to reduce the infiltration to an amount within the limits specified.
D. Low Pressure Air Test - shall conform to 31 TAC 317.2.a.4.B and procedures described in ASTM C828, ASTM C924 or other appropriate procedures, except for testing times. The test times shall be outlined in this section.
   1. The Low Pressure Air Test shall be performed on all sections of pipe less than 36-inch average inside diameter.

2. The pipe shall be pressurized to 3.5 psig greater than the pressure exerted by groundwater above the pipe. Once the pressure is stabilized, the minimum time allowable for the pressure to drop from 3.5 psig to 2.5 psig shall be computed from the following equation:
   T = 0.85 (D)(K) / Q
   where: T = time for pressure to drop 1.0 pounds per square inch gauge in seconds
   K = 0.00049 (D)(L), but not less than 1.0
   D = average inside diameter in inches
   L = length of line of same pipe size being tested, in feet
   Q = rate of loss, assume 0.0015 cubic feet per minute per square foot internal surface shall be used
3. The test may be stopped if no pressure loss has occurred during the first 25% of the calculated testing time. If any pressure loss or leakage has occurred during the first 25% of the testing period, then the test shall continue for the entire test duration or until failure.
4. Lines with a 27-inch average inside diameter and larger may be air tested at each joint. Pipes greater than 36-inch average inside diameter must be tested for leakage at each joint.
5. If the joint test is used, a visual inspection of the joint shall be performed immediately after testing. The pipe is to be pressurized to 3.5 psi greater than the pressure exerted by groundwater above the pipe. Once the pressure has stabilized, the minimum time allowable for the pressure to drop from 35. psig to 2.5 psig shall be 10 seconds.
6. Leaks shall be repaired and the sewer retested.

3.05 LEAKAGE TESTING FOR MANHOLES

A. After completion of manhole construction, wall sealing, or rehabilitation, but prior to backfilling, test manholes for watertightness using hydrostatic exfiltration testing, vacuum testing or other procedures acceptable by the Engineer.
B. Vacuum Testing: install tester head assembly at top of manhole and inflate sealing element per manufacturer's instructions to recommend maximum inflation pressure. Evacuate 10-inches of Mercury (Hg), disconnect pump and monitor for time period required below.

Depth of Manhole	Manhole Diameter 48"	60"	72"	
4'	10 sec	13 sec	16 sec	* Add time for each additional 2' depth
8'	20	26	32	
12'	30	39	48	
16'	40	52	64	
20'	50	65	80	
24'	50	78	96	
*	5	6.5	8	

C. Hydrostatic Testing - shall conform to 31 TAC 317.2.c.5.H
   1. All wastewater lines coming into the manhole shall be sealed with an internal pipe

plug, then the manhole shall be filled with water and maintained full for at least 1 hour.

2. The maximum leakage for hydrostatic testing shall be 0.025 gallons per foot diameter per foot of manhole depth per hour. Alternative test methods must ensure compliance with the above allowable leakage.
3. For concrete manholes a wetting period of 24 hours may be used prior to testing in order to allow saturation of the concrete.

D. Copies of all tests should be submitted to Engineer.
E. If leakage exceeds allowable amount, locate leaks, complete repairs necessary to seal manhole and repeat test procedure until satisfactory results are obtained.

3.06 TELEVISION INSPECTION OF GRAVITY SANITARY SEWERS

A. Inspect newly constructed or rehabilitated sewers, point repairs, service connections and reconnects by closed circuit television inspection prior to final acceptance of the line segment. Include a view of the beginning and ending manholes. This view shall consist of a pan of manhole walls, bench and inverts.
B. Provide VHS format video tapes at T-120 lengths at standard play. Use color television inspection equipment that has an accurate footage counter that displays on the monitor and record on the tape, the distance of the camera from the center line of the starting manhole.
C. Perform closed circuit color television inspection of one manhole section at a time. Adjust camera on skids so that the camera lens is centered (one-half of inside diameter or higher) in the pipe being televised. if skids must be lowered to pass protruding service connections, note the alignment on the inspection report.
D. Permanently label each tape with the following information before submittal,
   1. City Job Number
   2. Location Manhole Numbers, Size and Length of Line.
   3. Date Televised.
   4. Name of Contractor.
E. Tapes become property of City.

3.07 TESTING OF SANITARY SEWER FORCE MAINS

A After the pipe and appurtenances have been installed and before covering, test line and drain. Prevent damage to the Work or adjacent areas. Use clean water to perform tests.
B. Test pipe in the presence of Engineer or Engineer's representative; conform to minimum requirements of 31 TAC 317.3.
C. All force mains shall have a minimum sustained working pressure rating of 150 psig.
D. Test pipe at 25 psig or 1.5 times design pressure of the pipe, whichever is greater. Design pressure of the force main shall be rated total dynamic head of the lift station pump.
E. Test pipe at the required pressure for a minimum of 2 hours according to requirements of UNI-B-3.
F. Leakage shall be defined as the quantity of water that must be supplied into the test section to maintain pressure within 5 psi of the specified test pressure after the air in the line has been removed. Maximum allowable leakage shall be calculated by the following

formula:

$$L = (S)(D)(P^{0.5}) / 133{,}200$$

where: L = Leakage in gallon per hour (gph).
S = Length of pipe in feet.
D = Inside diameter of pipe in inches.
P = Pressure in pounds per square inch.

G. Copies of all tests should be submitted to Engineer.
H. Correct defect, cracks or leakage by replacement of defective items or by repairs as approved by Engineer.

END OF SECTION

SECTION 02 775

CONCRETE SIDEWALKS

PART 1 - GENERAL

1.01 SECTION INCLUDES

A. Reinforced concrete sidewalks.
B. Wheelchair Ramps.

1.02 MEASUREMENT AND PAYMENT

A. Unit Prices.
   1. Payment for concrete sidewalks is on square foot basis.
   2. Payment for wheelchair ramps of each type specified is on a per ramp basis. The removal of existing sidewalk and curb or curb and gutter is included in the cost of the ramp.
B. Stipulated Price (Lump Sum). If the Contract is a Stipulated Price Contract, payment for work in this Section is included in the total Stipulated Price.

1.03 REFERENCES

A. ASTM C 31 - Standard Practice for Making and Curing Concrete Test Specimens in the Field.
B. ASTM C 39 - Standard Test Method for Compressive Strength of Cylindrical Concrete Specimens.
C. ASTM C 42 - Test Method for Obtaining and Testing Drilled Cores and Sawed Beams of Concrete.
D. ASTM C 138 - Standard Test Method for Unit Weight, Yield, and Air Content (Gravimetric) of Concrete.
E. ASTM C 143 - Test Method for Slump of Hydraulic Cement Concrete.
F. ASTM C 172 - Practice for Sampling Freshly Mixed Concrete.
G. ASTM D 698 - Standard Test Methods for Moisture - Density Relations of Soils and Soil-Aggregate Mixtures Using 5.5-Pound Rammer and 12-inch Drop.

1.04 SUBMITTALS

A. Submittals shall conform to requirements of Section 01300 - Submittal Procedures.
B. Submit certified testing results and certificates of compliance.

PART 2 - PRODUCTS

2.01 MATERIALS

A. Concrete: Conform to material and proportion requirements for concrete of Section 02751 - Concrete Paving.
B. Reinforcing Steel: Conform to material requirements for welded wire fabric of Section 02751 - Concrete Paving.

C Forms: Use straight, unwarped wood or metal forms with nominal depth equal to or greater than the proposed sidewalk thickness. The use of 2" by 4" lumber as forms will not be allowed.
D. Sand Bed: Conform to material requirements for bank run sand of Section 02220 - Utility Backfill Materials.
E. Sodding: Conform to material requirements for sodding of Section 02931 - Sodding.

PART 3 - EXECUTION

3.01 REPLACEMENT

A. Replace sidewalks which are removed or damaged during construction with sidewalk of thickness and width equivalent to those removed or damaged.
B. Provide replaced and new sidewalks with wheelchair ramps if sidewalk intersects curb at street or driveway.

3.02 PREPARATION

A. Identify and protect utilities which are to remain.
B. Excavate subgrade to the line, grade, and cross section shown on Drawings. Remove soft spots and pumping soils and replace with fill material having a Plasticity Index between 7 and 20.
C. Immediately after subgrade is prepared, cover with compacted sand bed to depth as shown on Drawings. Lay concrete when sand is moist but not saturated.

3.03 PLACEMENT

A. Setting Forms: Securely stake forms to line and grade. Maintain position during concrete placement.
B. Reinforcement: Install No. 3 reinforcing steel bars on 18-inch centers longitudinally and transversely. Lay longitudinal bars in walk continuously, except through expansion joints. Support reinforcement in manner to maintain reinforcement in center of slab vertically during placement.
C. Place concrete in forms to specified depth and tamp thoroughly with "jitterbug" tamp, or other acceptable method. Bring mortar to surface.
D. Strike off to smooth finish with wood strike board. Finish smoothly with wood hand float. Brush across sidewalk lightly with fine-haired brush.
E. Unless otherwise indicated on Drawings, mark off joints 1/8 inch deep, at spacing equal to width of walk. Use joint tool equal in width to edging tool.
F. Finish edges with tool having 1/4-inch radius.
G. After concrete has set sufficiently, refill space along sides of sidewalk to top of walk with suitable material. Tamp until firm and solid. Repair driveways and parking lots damaged by sidewalk excavation in accordance with Section 02571 - Pavement Repair and Resurfacing.

3.04 CURING

A. Conform to requirements of Section 02751 - Concrete Pavement for curing.

3.05 FIELD QUALITY CONTROL

A. Testing will be performed under provisions of Section 01410 - Testing Laboratory Services.
B. Compressive Strength Test Specimens: Four test specimens for compressive strength test will be made in accordance with ASTM C 31 for each 30 cubic yards or less of sidewalk that is placed in one day. Two specimens will be tested at 7 days. The remaining two specimens will be tested at 28 days. Specimens will be tested in accordance with ASTM C 39. Minimum compressive strength shall be 3000 pounds per square inch at 7 days and 3500 pounds per square inch at 28 days.
C. Yield test for cement content per cubic yard of concrete will be made in accordance with ASTM C 138. If such cement content is found to be less than that specified per cubic yard, reduce batch weights until amount of cement per cubic yard of concrete conforms to requirements.
D. If the Contractor places concrete without notifying the laboratory, the City will have the concrete tested by means of a core test as specified in ASTM C 42. If the concrete does not meet the specification, the cost of the test will be deducted from payment due the Contractor.
E. Sampling of fresh concrete shall be in accordance with ASTM C 172.
F. Take slump tests when cylinders are made and when concrete slump appears excessive.
G. Concrete shall be acceptable if the average of the two 28-day compression tests is equal to or greater than the minimum 28-day strength specified.
H. If either of the two tests is less than the average of the two tests by more than 10 percent, that entire test shall be considered erratic and not indicative of the concrete strength. Core samples will be required of this concrete.
I. If any 28-day laboratory test indicates that concrete of low strength has been placed, the concrete in question shall be tested by taking cores as directed by the City Engineer may direct. At least three representative cores shall be taken and tested as specified in ASTM C 42 and the cost deducted from payment due the Contractor.

3.06 NONCONFORMING PAVEMENT

A. Remove and replace areas of sidewalk that fail compressive strength tests, with concrete of thickness shown on Drawings.
B. Nonconforming sidewalk sections shall be replaced at no additional cost to the County.

3.07 PROTECTION

A. Maintain sidewalks in good condition until completion of the Work.
B. Replace damaged sidewalks in accordance with Paragraph 3.01, Replacement.

END OF SECTION

SECTION 02 931

SEEDING AND SODDING

PART 1- GENERAL

1.01 SCOPE

A. This section covers seeding and sodding, to be performed after backfilling and grading is complete including fertilizing, planting, watering, and all other operations necessary to provide established grassland cover and sodded lawn areas.
The areas to be seeded or sodded shall include all areas destroyed or damaged during construction unless cultivated or otherwise covered by new construction or paving. All such areas with slopes greater than 3 to 1, or which are too small for the operation of seeding equipment, shall be sodded; all other such areas shall be seeded.

1.02 GENERAL

A. No seeding or sodding shall be done until the topsoil has been placed and final grading of the disturbed areas has been completed.

1.03 MEASUREMENT AND PAYMENT

A. No separate payment shall be made in connection with seeding and sodding as specified or required. All costs in connection with seeding and sodding shall be included with each item of work which involves seeding and sodding.
Seeding and sodding work shall be performed by an experienced contractor having suitable equipment manufactured expressly for the purpose.

PART 2 - MATERIALS

2.01 Fertilizer

A. Fertilizer for mixing into the topsoil of the seed and sod beds shall be a complete commercial fertilizer, part of the elements of which are derived from organic sources. Fertilizer shall contain the following percentages by weight:
   13 percent nitrogen
   13 percent phosphoric acid
   13 percent potash
Fertilizer shall be delivered mixed in standard size bags showing weight, analysis, and name of manufacturer. All fertilizer shall be stored until use in a weatherproof place in such manner that it will be kept dry and its effectiveness will not be impaired.

2.02 MULCH

A. Mulch for application to seedbed areas shall include wheat straw, oat straw, grass hay, sudan grass hay, or prairie hay. If prairie hay is used, it shall consist chiefly of desirable native perennial grasses. All mulch shall be free of noxious weeds.

2.03 SEED

A. All seed used shall be <u>certified</u> seed label in accordance with U.S. Department of Agriculture Rules and Regulations under the Federal Seed Act and shall comply with the state seed laws of the State of Texas. All seed shall be furnished in sealed standard containers. Seed which has become wet, moldy, or otherwise damaged in

transit or in storage will not be acceptable. Seeds planted per acre shall be of type specified with mixture, rate, and planting dates as follows:

	Type	Application Rate Pounds per Acre	Planting Date
1.	Hulled Common Bermuda Grass 99/88	40	Jan 1 to Apr 15
	Unhulled Common Bermuda Grass 98/88	40	
	Annual Rye Grass (Gulf)	100	
2.	Hulled Common Bermuda Grass 98/99	40	Apr 16 to Sep 30
	Annual German or Foxtail Millet	100	
3.	Hulled Common Bermuda Grass 98/88	40	Oct 1 to Dec 31
	Unhulled Common Bermuda Grass 98/88	40	
	Annual Rye Grass (Gulf)	100	
		Min. Purity	Min. Germination
	Bermuda Grass	95%	90%

2.04 SOD

A. Sod shall be cut in strips or rectangular sections which may vary in length but shall be of equal width and of a size that will permit the sections to be lifted and rolled without breaking.

B. Sod shall be procured from areas having growing conditions similar to those areas on which the sod is be used. The sod shall be free of weeds, large stones, roots, and other material that might be detrimental to the development of the sod or to future maintenance. All sod shall be cut to a minimum thickness of one inch.

2.05 CERTIFICATION OF MATERIALS

A. The Contractor shall furnish to the Engineer duplicate copies of invoices for all fertilizer to be used on the project. Invoices for fertilizer shall show the type or grade furnished. Any fertilizer found on receipt of the invoices, or on subsequent inspection or test, to be in noncompliance with these specifications shall be immediately removed from the site of the work and shall not again be offered.

B. The Contractor shall furnish to the Engineer duplicate signed copies of a statement from the vendor, certifying that each container of seed delivered to the site of the work is fully labeled in accordance with the Texas State Seed Laws and is at least equal to the specified requirements. This certification shall appear on, or shall be attached to, all copies of invoices for seed. Each bag or container of seed shall

have attached an analysis tag showing the percentage of purity, germination, inert material, foreign crop seed, and the percentage of noxious weed seed. Or, if the entire quantity of seed is mixed previous to delivery to the site, the invoice shall show the correct analysis of each type of variety of seed. Any seed found on receipt of the invoices and certification, or on subsequent inspection or test, to be in noncompliance with the specifications shall be immediately removed from the site of the work and shall not again be offered.

PART 3- EXECUTION

3.01 PREPARATION OF AREAS FOR SEEDING OR SODDING

A. The ground surface shall be cleared of all brush, stumps, roots, stones larger than 2 inches in diameter, wire, or any other material which may hinder proper tilling, before planting, or subsequent maintenance operations. After areas have been brought to the grades indicated on the drawings, they shall be thoroughly tilled to a depth of at least 3 inches by discing, harrowing, or other acceptable methods until the soil is well pulverized. All discing, harrowing, or raking shall be done in a direction parallel to the contour lines on the slope and not uphill and downhill. Any objectionable undulations or irregularities in the surface, resulting from tillage or other operations, shall be removed before planting operations are begun. The work shall be performed only during periods when satisfactory results are likely to be obtained. When conditions are such, by reason of drought, excessive moisture, or other factors, that results are not likely to be satisfactory, the work shall be stopped until the conditions have been corrected to the satisfaction of the Engineer.

3.02 APPLICATION OF FERTILIZER

A. Fertilizer as specified shall be applied within 24 hours prior to the filling operation, shall be distributed uniformly at the rate of 750 lbs per acre (600 lbs/ac Apr. 15 to Sept. 1) over the areas to be seeded or sodded, and shall be incorporated into the soil to a depth of approximately 2 inches by discing, harrowing, or other acceptable methods. The incorporation of the fertilizer may be accomplished as part of the tillage operation.

3.03 SEEDING

A. Seeding shall be done by mechanical power-drawn machines, mechanical hand seeders, broadcasting, or other acceptable methods. When mechanical equipment is used,
provisions shall be made by markers or other acceptable means to assure that successive planted strips will overlap or be separated by a space not greater than the space between rows planted by the equipment being used. Upon inspection, either during planting operations or after, if there is a show of green, indicating that strips wider than the space between the planted rows have been left or other areas skipped, additional seed shall be planted in those areas at no additional cost to the Owner. Seeding shall not be done during periods of such severe drought, high winds, or excessive moisture that satisfactory results are not likely to be obtained.

B. Broadcast seeding shall be either by hand or by sowing equipment. The seed shall be uniformly distributed over the designated areas at the rate of approximately 50 lbs of pure live seed per acre. Half the seed shall be sown when the sower is moving at right angles to the first sowing. The seed shall be covered to a depth of not more than 0.25 inch by means of a brush harrow, spike tooth harrow, chain harrow, cultipacker, or other similar device. Broadcast seeding shall not be done during windy weather.

3.04 MULCHING

A. Mulching shall be immediately following the seeding application so that all areas seeded shall be mulched the same day. The mulching material shall be placed uniformly to a depth of 1.5 - 2 inches over the entire seedbed area by means of a mulching blower or other acceptable methods. The mulching material shall be disced or punched into the soil so that it is partially covered. Two or more passes of the mulch puncher or serrated disc may be required to thoroughly anchor the mulch into the soil. The operation of all mulch tilling equipment shall be performed parallel to the ground contours and not uphill and downhill.

3.05 HYDROMULCH SEEDING

A. Seed, fertilizer and mulch shall be applied in a slurry form. Mulch shall be virgin wood cellulose fiber made from whole wood chips. Within the fiber mulch materials at least 20 percent of the fibers will be 10.7 mm in length and 0.27 mm in diameter. Rate of application shall be 2,000 lbs per acre. Soil stabilizers such as Terra Type III, (or approved equal) shall be applied at a rate of 40 lbs per acre on the side slopes and "Terra Type I" (or approved equal) shall be applied at a rate of 40 lbs per acre in the flatter upper portions of the channel areas.

3.06 SODDING

A. Sodding shall be done within the seasonal limits specified for seeding.
B. Sod shall be placed after the soil has been prepared as specified. Care shall be exercised at all times to retain the native soil on the roots of the sod during the process of stripping, transporting, and planting. The sod shall be transplanted within 24 hours from the time of stripping, unless stored in a satisfactory manner.
C. If dry, the sod bed shall be moistened before laying the sod. Sod shall be laid smoothly, edge to edge, and with staggered joints. The sod shall immediately be pressed firmly into contact with the sod bed by tamping or rolling with acceptable equipment so as to eliminate all air pockets, provide a true and even surface, and assure knitting. Completed areas of sod, representing one day's planting, shall be watered sufficiently to wet the sod through completely and to wet at least 2 inches of the sod bed. Watering shall be done again as soon as drying is evident or as directed. Each application of water shall be sufficient to wet the sod bed at least 2 inches deep. Excessive quantities of water shall not be applied so as to cause erosion or damage to the finished surface.
D. Sod strips on slopes steeper than 3 to 1 shall be staked down with wood pegs driven through the sod into the soil base.
E. Immediately after the sodding operations have been completed, the sodded areas shall be compacted to reduce air pockets to a minimum using a cultipacker, pneumatic roller (not wobble-wheel), or other acceptable equipment weighing 60 to 90 lbs per linear inch of roller. Pneumatic rollers shall have tires of sufficient size to assure complete coverage of the soil surface. A cleaner will be required on smooth or corrugated rollers. If the soil is of a type that a smooth or corrugated roller cannot be operated satisfactorily, a pneumatic roller will be required.

3.07 WATERING

A. All seeded and sodded areas shall be watered. Water shall be applied immediately after mulching and compaction is completed. Watering shall be sufficient to keep the top two inches damp for a period of at least three weeks or until a complete cover of green turf is established within the seeded areas and until the sod has rooted.

B. Water will be supplied by the Owner as stipulated elsewhere with transportation provided by the Contractor. All necessary hose, portable pipe, sprinklers, and other accessories shall be furnished by the Contractor.

3.08 ESTABLISHMENT OF GRASS GROWTH

A. The Contractor shall be solely responsible for the establishment of a satisfactory grass growth and shall protect, water, and maintain such grass growth until final acceptance of all of the work to be performed under this contract. Any reseeding or resodding necessary to establish a satisfactory grass growth shall be done at no additional cost to the Owner. Final acceptance will not be made until a satisfactory grass growth has been established.

B. The seeded or sodded areas shall be mowed to a height of 3 inches as soon as, and each time that, the grass reaches an average height of 5 inches, until final acceptance.

C. If weeds or other vegetation grow to such height that they threaten to retard the growth of the planted species, they shall be mowed, raked, and removed from the area.

D. When the surface of any part of an area which has been seeded or sodded is gullied or eroded during the first growing season, the affected portions shall be repaired to re-establish the condition and grade of the soil prior to the injury and then replanted at no additional cost to the Owner.

END OF SECTION

SECTION 03350
CONCRETE FINISHING

PART 1 - GENERAL

1.01 SECTION INCLUDES

A. Finishing slabs on grade and monolithic floor slabs.

B. Sidewalks

C. Concrete Stairs and Ramps

D. Surface treatment with concrete hardener, sealer, and slip resistant coatings.

1.02 RELATED SECTIONS

1.03 REFERENCES

A. ACI 301 - Specifications for Structural Concrete for Buildings; American Concrete Institute International; 2005.

B. ACI 302.1R - Guide for Concrete Floor and Slab Construction; American Concrete Institute International; 2004.

1.04 SUBMITTALS

A. See the Section for Administrative Requirements, for submittal procedures.

B. Product Data: Provide data on concrete hardener, sealer, and slip resistant treatment, including information on compatibility of different products and limitations.

C. Maintenance Data: Provide data on maintenance renewal of applied coatings.

1.05 QUALITY ASSURANCE

A. Perform Work in accordance with ACI 301.

1. Maintain one copy on project site.

1.06 QUALITY ASSURANCE PRE-JOB CONFERENCE

A. One week prior to placement of integrally colored concrete a meeting will be held to discuss the Project and application materials.

B. It is suggested that the ArchitectGeneral Contractor, Subcontractor be present.

1.07 QUALITY ASSURANCE Mockups Concrete Finish Mockups:

A. At location on Project selected by General Contractor place and finish 4 by 4 feet area.

B. For accurate color, the quantity of concrete mixed to produce the sample should not be less than 3 cubic yards (or not less than 1/3 the capacity of the mixing drum on the ready-mix truck) and should always be in full cubic yard increments. Excess material shall be discarded according to local regulations.

C. Construct mockup using processes and techniques intended for use on permanent work, including curing procedures. Include samples of control, construction, and expansion joints in sample panels. Mockup shall be produced by the individual workers who will perform the work for the Project.

D. Retain samples of cements, sands, aggregates and color additives used in mockup for comparison with materials used in remaining work.

E. Accepted mockup provides visual standard for work of Section.

F. Mockup shall remain through completion of work for use as a quality standard for finished work.

G. Remove mockup when directed.

1.08 DELIVERY, STORAGE, AND HANDLING

A. Deliver materials in manufacturer's sealed packaging, including application instructions.

1.09 PROJECT CONDITIONS

A. Coordinate the work with concrete floor placement and concrete floor curing.

1.10 ENVIRONMENTAL REQUIREMENTS

A. Temporary Lighting: Minimum 200 W light source, placed 8 feet above the floor surface, for each 425 sq.ft. of floor being finished.

B. Do not finish floors until interior heating system is operational.

C. Temporary Heat: Ambient temperature of 50 degrees F minimum.

D. Ventilation: Sufficient to prevent injurious gases from temporary heat or other sources affecting concrete.

PART 2 - PRODUCTS

2.01 COMPOUNDS - HARDENERS AND SEALERS

A. Euclid PRO-POLISH DENSIFIER PLUS

2.02 SURFACE RETARDER

A. Euclid CONCRETE SURFACE RETARDER S

2.03 SLIP RESISTANT TREATMENT

A. EUCO GRIP Slip-Resistant Additive for Concrete Sealers & Coatings

B. Provide documentation to comply with Texas Accessibility Standards for wet/dry slip resistant coefficients.

PART 3 - EXECUTION

3.01 EXAMINATION

A. Verify that floor surfaces are acceptable to receive the work of this section.

B. Schedule on site meeting to review sample area 100 SF minimum prior to sealing designated areas.

C. Surfaces shall be finished uniformly with the following finish:

1. Broomed: Pull broom across freshly floated concrete to produce fine texture in straight lines perpendicular to main line of traffic. Do not dampen brooms.

2. Trowel: Precautions should be taken to ensure that the surface is uniformly troweled so that it will not be slippery. Do not over-trowel or burnish the surface.
3. Rock Salt: Trowel concrete. Then sprinkle salt on concrete and press into surface leaving only tops of salt grains exposed. After 24 hours, wash salt away with water and brush. Allow surface and impressions to dry before applying curing compound.
4. Sandblast: Allow concrete to cure to sufficient strength so that it will not be damaged by blasting but not less than seven days. Use medium sandblasting to remove cement mortar from surface and expose aggregate to match originally approved mockup.
5. Exposed Aggregate: Finish concrete and apply chemical surface retarder according to manufacturer's written instructions. Wash surface to match originally approved mockup.

3.02 FLOOR FINISHING

A. Finish concrete floor surfaces in accordance with ACI 301 and ACI 302.1R.
B. Steel trowel surfaces that will receive carpeting, resilient flooring, thin set tile.
C. Steel trowel surfaces that are scheduled to be exposed.
D. In areas with floor drains, maintain design floor elevation at walls; slope surfaces uniformly to drains at 1/8 inch per foot nominal.

3.03 FLOOR SURFACE TREATMENT

A. Apply hardener to scheduled floor surfaces in accordance with manufacturer's instructions.
B. Apply slip resistant finish to scheduled floor surfaces in accordance with manufacturer's instructions.
C. Apply sealer to scheduled floor surfaces in accordance with manufacturer's instructions.
D.

3.04 TOLERANCES

A. Measure flatness of slabs in accordance with ACI 302.1R and to achieve the following tolerances:
   6. Maximum Variation of Surface Flatness For Exposed Concrete Floors: 1/4 inch in 10 ft.
   7. Maximum Variation of Surface Flatness Under Carpeting: 1/4 inch in 10 ft.
B. Correct the slab surface if tolerances are less than specified.
C. Correct defects by grinding or by removal and replacement of the defective work. Areas requiring corrective work will be identified. Re-measure corrected areas by the same process.

END OF SECTION

SECTION 04065

MORTAR AND MASONRY GROUT

PART 1 - GENERAL

1.01 SECTION INCLUDES

A. Mortar for masonry.

1.02 RELATED SECTIONS

A. Section 04816 - Masonry Veneer: Installation of mortar.

1.03 REFERENCES

A. ASTM C 91 - Standard Specification for Masonry Cement; 2003a.

B. ASTM C 150 - Standard Specification for Portland Cement; 2002a.

C. ASTM C 270 - Standard Specification for Mortar for Unit Masonry; 2003b.

D. ASTM C 1142 - Standard Specification for Extended Life Mortar for Unit Masonry; 1995 (Reapproved 2001).

1.04 SUBMITTALS

A. See Section 01300 - Administrative Requirements, for submittal procedures.

B. Product Data: Include design mix and indicate whether the Proportion or Property specification of ASTM C 270 is to be used. Also include required environmental conditions and admixture limitations.

C. Manufacturer's Certificate: Certify that products meet or exceed specified requirements.

1.05 DELIVERY, STORAGE, AND HANDLING

A. Maintain packaged materials clean, dry, and protected against dampness, freezing, and foreign matter.

1.06 ENVIRONMENTAL REQUIREMENTS

A. Maintain materials and surrounding air temperature to minimum 40 degrees F prior to, during, and 48 hours after completion of masonry work.

B. Maintain materials and surrounding air temperature to maximum 90 degrees F prior to, during, and 48 hours after completion of masonry work.

PART 2 - PRODUCTS

2.01 MATERIALS

A. Masonry Cement: ASTM C 91, Type S.

B. Portland Cement: ASTM C 150, Type I - Normal; color as required to produce approved colorsample.

C. Pigments for Colored Mortar: Iron or chromium oxides with demonstrated stability and colorfastness.

D. Bonding Agent: Latex type.

2.02 MORTAR MIXES

A. Ready Mixed Mortar: ASTM C 1142, Type RS.

B. Mortar for Unit Masonry: ASTM C 270, Property Specification.

1. Exterior, non-loadbearing masonry: Type S.

C. Colored Mortar: Proportion selected pigments and other ingredients to match Architect's sample, without exceeding manufacturer's recommended pigment-to-cement ratio.

2.03 MORTAR MIXING

A. Thoroughly mix mortar ingredients using mechanical batch mixer, in accordance with ASTM C 270 and in quantities needed for immediate use.

B. Maintain sand uniformly damp immediately before the mixing process.

C. Add mortar color in accordance with manufacturer's instructions. Provide uniformity of mix and coloration.

D. Do not use anti-freeze compounds to lower the freezing point of mortar.

E. If water is lost by evaporation, re-temper only within two hours of mixing.

F. Use mortar within two hours after mixing at temperatures of 90 degrees F, or two-and-one-half hours at temperatures under 40 degrees F.

PART 3 - EXECUTION

3.01 PREPARATION

A. Apply bonding agent to existing concrete surfaces.

3.02 INSTALLATION

A. Install mortar to requirements of section(s) in which masonry is specified.

3.03 FIELD QUALITY CONTROL

A. Daily field observation.

END OF SECTION

SECTION 04200
UNIT MASONRY

PART 1 - GENERAL

SECTION 04200 - MASONRY

PART 1 - GENERAL

1.01 DESCRIPTION

A. Masonry work includes Clay Tile unit masonry and Brick masonry.

B. Reinforcement, anchorage, and accessories.

C. Flashings.

1.02 RELATED REQUIREMENTS

A. Section 03200 - Concrete Reinforcing: Reinforcing steel for grouted masonry.

B. Section 06100 - Rough Carpentry: Blocking in conjunction with the Work of this Section.

C. Section 07900 - Joint Sealers: Rod and sealant at control joints.

D. Section 4212 – Glazed Structural Clay Tile Masonry

E. Section 08510 - Aluminum Windows: Aluminum windows installed in the Work of this Section.

F. Section 08910 - Louvers: Louver assemblies installed in the Work of this Section.

1.03 REFERENCE STANDARDS

A. ACI 530/530.1/ERTA - Building Code Requirements and Specification for Masonry Structures; American Concrete Institute International; 2009.

B. ASTM A82/A82M - Standard Specification for Steel Wire, Plain, for Concrete Reinforcement; 2007.

C. ASTM A153/A153M - Standard Specification for Zinc Coating (Hot-Dip) on Iron and Steel Hardware; 2009.

D. ASTM A615/A615M - Standard Specification for Deformed and Plain Billet-Steel Bars for Concrete Reinforcement; 2009b.

E. ASTM A641/A641M - Standard Specification for Zinc-Coated (Galvanized) Carbon Steel Wire; 2009a.

F. ASTM A653/A653M - Standard Specification for Steel Sheet, Zinc-Coated (Galvanized) or Zinc-Iron Alloy-Coated (Galvannealed) by the Hot-Dip Process; 2010.

G. ASTM C34 - Standard Specification for Structural Clay Load-Bearing Wall Tile; 2010.

H. ASTM C56 - Standard Specification for Structural Clay Nonloadbearing Tile; 2010.

I. ASTM C67 - Standard Test Methods for Sampling and Testing Brick and Structural Clay Tile; 2009.

J. ASTM C216 - Standard Specification for Facing Brick (Solid Masonry Units Made From Clay or Shale); 2010.

K. ASTM C652 - Standard Specification for Hollow Brick (Hollow Masonry Units Made From Clay or Shale); 2010.

L. UL (FRD) - Fire Resistance Directory; Underwriters Laboratories Inc.; current edition.

1.04 SUBMITTALS

A. See Section 01 30 00 - Administrative Requirements, for submittal procedures.

B. Product Data: Provide data for decorative masonry units and fabricated wire reinforcement.

C. Samples: Submit four samples of face brick units to illustrate color, texture and extremes of color range.

D. Manufacturer's Certificate: Certify that products meet or exceed specified requirements.

1.05 QUALITY ASSURANCE

A. All work shall conform to the standards of the Brick Institute of America and to codes having jurisdiction.

B. Do not lay units that are wet or frozen.

C. All brick shall be from a single manufacturer’s production run.

D. Mortar and Grout Testing:

1. Test each type of mortar in conformance with ASTM C 780-00.

2. Test grout in each type of wall construction in conformance with ASTM C 1019

3. Inspect cores of fully grouted masonry reinforcing.

E. Comply with provisions of ACI 530/530.1/ERTA, except where exceeded by requirements of the contract documents.

1.06 DELIVERY, STORAGE, AND HANDLING

A. Deliver, handle, and store masonry units by means that will prevent mechanical damage and contamination by other materials.

PART 2 - PRODUCTS

2.01 SOLID BRICK:

A. Manufacturers:

1. D’hanis 311 E Nakoma Dr, San Antonio, TX

2. Brick must be the same color as the Clay Tile Masonry

3. Substitutions: See Section 01 60 00 - Product Requirements.

B. Hollow Clay Structural Brick: ASTM C 652, Grade SW; Type HBS; Class H40V.

1. Compressive strength: 11,000 psi, measured in accordance with ASTM C67.

2. Compressive strength: 11,000 psi, measured in accordance with ASTM C67.

3. Special shapes: Molded units as required for lintels, unless standard units can be sawn to produce equivalent effect.

4. Provide solider units with adjacent side finish at end units.

2.02 CLAY TILE MASONRY:

A. Manufacturers:

1. D’hanis 311 E Nakoma Dr, San Antonio, TX

2. Clay Tile Masonry must be the same color as the Solid Brick

3. Substitutions: See Section 01 60 00 - Product Requirements.

B. Provide hollow load bearing block complying with ASTM C126 - 16

1. Size: Nominal 16" long x 8" high x 8” wide or 12” wide

2.03 MORTAR AND GROUT:

A. Provide mortar and grout complying with ASTM C 270 or ASTM C476 (for reinforced masonry) and requirements of architect of record. Type S based on proportion specification.

B. MORTAR MATERIALS:

1. Portland cement; ASTM C 150, type I.
2. Masonry cement: ASTM C 91.
3. Hydrated lime: ASTM C207, type S
4. Sand; ASTM C 144
5. Aggregates for grout ASTM C 404
6. Mortar color pigment: none
7. Admixture: anti-freeze compounds or those containing chlorides are prohibited.
   a. Provide Grace Masonry Products DRY-BLOCK™ mortar admixture at all single wythe concrete masonry unit and hollow brick masonry walls.
8. Water: drinkable.

C. Joint Reinforcement: Provide zinc coated (galvanized) steel wire, ASTM C 641 for zinc coating, type as required by the architect of record.

D. Corrugated wall ties are prohibited.

E. Miscellaneous Materials: Flashing, control/expansion joint materials as required by architect of record.

1. Acceptable concealed flexible flashing: 3 oz copper sheet bonded between two layers of asphalt waterproofed creped kraft paper, EPDM thru-wall flashing (40 mil min.). .

2.04 ACCESSORIES

A. Preformed Control Joints: Neoprene material. Provide with corner and tee accessories, fused joints.

1. 1. Manufacturers:
   a. WIRE-BOND: www.wirebond.com.
   b. Substitutions: See Section 01 60 00 - Product Requirements.

B. Joint Filler: Closed cell polyvinyl chloride; oversized 50 percent to joint width; self expanding; in maximum lengths available.

1. Manufacturers:
   a. Dur-O-Wal: www.dur-o-wal.com.
   b. WIRE-BOND: www.wirebond.com.
2. Substitutions: See Section 01 60 00 - Product Requirements.

C. Nailing Strips: Preservative treated softwood, as specified in Section 06 10 00.

D. Cleaning Solution: Non-acidic, not harmful to masonry work or adjacent materials.

PART 3 - EXECUTION

3.01 EXAMINATION

A. Verify that field conditions are acceptable and are ready to receive masonry.

B. Verify that related items provided under other sections are properly sized and located.

C. Verify that built-in items are in proper location, and ready for roughing into masonry work.

3.02 PREPARATION

A. Direct and coordinate placement of metal anchors supplied for installation under other sections.

B. Provide temporary bracing during installation of masonry work. Maintain in place until building structure provides permanent bracing.

3.03 COURSING

A. Establish lines, levels, and coursing indicated. Protect from displacement.

B. Maintain masonry courses to uniform dimension. Form vertical and horizontal joints of uniform thickness.

C. Brick Units:

1. Bond: Running.
2. Coursing: Three units and three mortar joints to equal 8 inches.
3. Mortar Joints: Weather Struck.

3.04 PLACING AND BONDING

A. Lay hollow masonry units with face shell bedding on head and bed joints.

B. Buttering corners of joints or excessive furrowing of mortar joints is not permitted.

C. Remove excess mortar as work progresses.

D. Interlock intersections and external corners.

E. Do not shift or tap masonry units after mortar has achieved initial set. Where adjustment must be made, remove mortar and replace.

F. Perform job site cutting of masonry units with proper tools to provide straight, clean, unchipped edges. Prevent broken masonry unit corners or edges.

G. Isolate masonry partitions from vertical structural framing members with a control joint as indicated.

H. Isolate top joint of masonry partitions from horizontal structural framing members and slabs or decks with compressible joint filler.

3.05 REINFORCEMENT AND ANCHORAGE

A. Install horizontal joint reinforcement 16 inches on center.

B. Place masonry joint reinforcement in first and second horizontal joints above and below openings. Extend minimum 16 inches each side of opening.

C. Place continuous joint reinforcement in first and second joint below top of walls.

D. Lap joint reinforcement ends minimum 14 inches.

E. Reinforce joint corners and intersections with strap anchors 16 inches on center.

F. Install vertical reinforcement in grouted cells per structural notes and drawings.

3.06 MASONRY FLASHINGS

A. Whether or not specifically indicated, install masonry flashing to divert water to exterior at all locations where downward flow of water will be interrupted.

1. Extend flashings full width at such interruptions and at least 4 inches into adjacent masonry or turn up at least 4 inches to form watertight pan at non-masonry construction.

2. Remove or cover protrusions or sharp edges that could puncture flashings.

3. Seal lapped ends and penetrations of flashing before covering with mortar.

B. Extend metal flashings through exterior face of masonry and turn down to form drip.

C. Lap end joints of flashings at least 4 inches and seal watertight with mastic or elastic sealant.

3.07 LINTELS

A. Install reinforced unit masonry lintels over openings.

1. Openings to 42 inches: Place two, No. 3 reinforcing bars 1 inch from bottom web.

2. Openings from 42 inches to 78 inches: Place two, No. 5 reinforcing bars 1 inch from bottom web.

3. Do not splice reinforcing bars.

4. Support and secure reinforcing bars from displacement. Maintain position within 1/2 inch of dimensioned position.

5. Place and consolidate grout fill without displacing reinforcing.

6. Allow masonry lintels to attain specified strength before removing temporary supports.

B. Maintain minimum eight inch bearing on each side of opening.

3.08 GROUTED COMPONENTS

A. Walls are to be fully grouted solid.

B. Support and secure reinforcing bars from displacement. Maintain position within 1/2 inch of dimensioned position.

C. Place and consolidate grout fill without displacing reinforcing.

3.09 CONTROL AND EXPANSION JOINTS

A. Do not continue horizontal joint reinforcement through control and expansion joints.

3.10 BUILT-IN WORK

A. As work progresses, install built-in metal door frames and other items to be built into the work and furnished under other sections.

B. Install built-in items plumb, level, and true to line.

C. Bed anchors of metal door and glazed frames in adjacent mortar joints. Fill frame voids solid with grout.

D. Do not build into masonry construction organic materials that are subject to deterioration.

3.11 TOLERANCES

A. Maximum Variation from Unit to Adjacent Unit: 1/16 inch.

B. Maximum Variation from Plane of Wall: 1/4 inch in 10 ft and 1/2 inch in 20 ft or more.

C. Maximum Variation from Plumb: 1/4 inch per story non-cumulative; 1/2 inch in two stories or more.

D. Maximum Variation from Level Coursing: 1/8 inch in 3 ft and 1/4 inch in 10 ft; 1/2 inch in 30 ft.

E. Maximum Variation of Joint Thickness: 1/8 inch in 3 ft.

F. Maximum Variation from Cross Sectional Thickness of Walls: 1/4 inch.

3.12 CUTTING AND FITTING

G. Cut and fit for chases, pipes, conduit, and sleeves. Coordinate with other sections of work to provide correct size, shape,and location.

H. Obtain approval prior to cutting or fitting masonry work not indicated or where appearance or strength of masonry work may be impaired.

3.13 FIELD QUALITY CONTROL

A. Provide daily observation of all aspects of the masonry installation.

3.14 CLEANING

A. Remove excess mortar and mortar smears as work progresses.

B. Replace defective mortar. Match adjacent work.

C. Clean soiled surfaces with manufactured recommended cleaning solution. Apply cleaning solution in strict accordance with solution manufacturers written instructions. Do not use muriatic acid. Do not sandblast.

D. Use non-metallic tools in cleaning operations.

3.16 PROTECTION

A. Without damaging completed work, provide protective boards at exposed external corners that are subject to damage by construction activities.

END OF SECTION

SECTION 04212

GLAZED STRUCTURAL CLAY TILE MASONRY

1.0 GENERAL

1.1 SUMMARY

A. System Description: Work described in this section covers requirements for Structural Glazed Tile Unit Masonry and its installation and maintenance.

B. Products installed but not furnished in this section:

1. Section 04060: Masonry Mortaring

1.2 REFERENCES

A. Applicable standards of the following as referenced:
1. American Society for Testing and Materials (ASTM)
2. Brick Industry Association (BIA)
3. Underwriters Laboratories, Inc. (UL)
4. Ceramic Glazed Masonry Institute (CGMI)
5. Building Code Requirements for Masonry Structures (ACI 530-05/ASCE 5-05/TMS 402-05)

1.3 DEFINITIONS

A. Terms
1. Structural Glazed Tile: SGT, extruded and manufactured clay masonry unit with a ceramic glazed face that is a structural unit which can be load bearing masonry.
2. Glazed Face: Exposed ceramic glazed face(s) on SGT.
3. Bed Joint: Horizontal mortar joint between two SGT.
4. Head Joint: Vertical mortar joint between two SGT.

1.4 SUBMITALS:

A. Strap Samples: Submit three samples to indicate the approximate range of color and texture to be expected in the completed wall for each color or texture.

B. Certificates:
1. Material Safety Data Sheet (MSDS)
2. Certification Letter: Submit a certified letter from manufacturer prior to delivery of SGT to jobsite for compliance of specification requirements.

1.5 QUALITY ASSURANCE:

A. Sample Field Panel: Construct a wall panel 4’ (1.2m) wide and 4’ (1.2m) high for SGT work. Include backup wall in sample panel. Locate as directed by GC.

B. Panel to indicate quality representation of:
1. SGT color and texture range.
2. Bonding pattern.
3. Mortar color.
4. Joint tooling.
5. Reinforcement/Ties.
6. Workmanship.

1.6 DELIVERY, STORAGE AND HANDLING:

A. Deliver SGT to jobsite as packaged by manufacturer. Offload SGT packages using equipment that will not damage SGT. No SGT is allowed to be in direct contact with the ground. Do not double stack cubes of SGT.
B. Cover SGT with non-staining waterproof membrane covering. Keep units dry. Allow air circulation around stacked units. Installation of wet or stained SGT is prohibited.
C. Keep SGT units in the individual cardboard packaging provided by the manufacturer until the unit is ready to be laid in the wall. Never use brick tongs or “pitch” the SGT to upper levels of scaffolding.

1.7 PROJECT CONDITIONS:

A. Environmental requirements. Use normal procedures when temperatures are between 100°F to 40°F (37.8°C to 4.4 C) (see current reference BIA Technical Note 1):

1. See Brick Industry Association Technical Note 1, Table 1 “Requirements for Masonry Construction in Hot and Cold Weather” for temperatures outside this range unless specific written approval from Architect. (Reference: BIA Technical Notes for Guide Specifications for Brick Masonry.)

B. Take all precautions necessary to protect units from damage.
C. Handle and store in protective cartons or trays until actual installation in the wall.
D. Damaged units will not be accepted in the wall.

2.0 PRODUCTS:

2.1 STRUCTURAL GLAZED TILE:

A. Pattern or Type:4W and 8W
Stacked bond,
B. Characteristics:
1. Meet ASTM C-126 for grade Select quality.
2. Must meet ASTM C-84 (UL723) requirements and rated zero flame spread, zero smoke developed and zero fuel contribution. Also will not release any toxic or noxious fumes when burned at 2000°F (1093°C).
3. Nominal Face stretcher dimensions standard 4W Series (Vertical Cell) 8” (135mm) height x 8”
4. Nominal Bed Depths: 4” and 2” (101mm) thickness.
5. Shapes: Furnished as shown on the plans in accordance with manufacturers current standard production. All external corners, sills and jambs shall be 1' radius, unless otherwise noted. The base course is straight as shown on the drawings.
Color(s) to be selected by Architect from Manufacturer's full line of colors.
Anticipated Colors 4506 INDIGO, 4163 BUTTER, 4000 REGAL BLUE, 2200A COLBALT.
6. Multiple Colors on one Tile: Furnish as shown on the plans tiles that have multiple color glaze on one tile.
C. Approved manufacturer:
1. Elgin Butler Company, Elgin, Texas, (512) 285-3356.
2. Or approved equal.

2.2 ACCESSORIES:

A. Mortar: As specified in mortar section.
B. Joint Reinforcement: use continuous horizontal joint reinforcement in lengths of 10 to 12‘ (3 to 4 m). Use #9 gauge Stainless steel wire or 3/16” (5 mm) diameter wire. Ladder-type horizontal joint reinforcement 2 vertical courses.

C. Wall Ties: Installed as per BIA recommendations use Stainless Steel metal ties, 3/16" (5mm) diameter steel wall, Maximum distance of 16" (406mm) vertically and 16" (913mm) horizontally.

3.0 EXECUTION:

3.1 PREPARATION :

A. Protection of work:

1. Protect the surfaces of the installed SGT. Cover freshly laid weather exposed masonry at the end of each day or the start of each shut down period, with non-staining waterproof material in such a manner which will ensure that the covering will overhang the masonry not less than 2' (50mm) on each side of the masonry. Anchor on each side of wall. Finished walls to be covered with #15 felt paper and erect wooden barriers to protect walls at areas that are subject to large amounts of construction traffic or material movement. Protect glazed face from exposure to welding burns, stains, etc.

3.2 INSTALLATION

A. Workmanship:
   1. Lay only dry masonry units.
   2. Lay masonry plumb, level and true to line.
   3. Lay units in bonding pattern, as specified.
   4. Cut units ONLY WHERE INDICATED ON DRAWINGS with masonry saw using a wet diamond blade. Do not use units less than 4" in length.

B. Place masonry control joints where shown on drawings.

C. Mortar Joints:
   1. Lay joints of each first course in full width bed of mortar.
   2. Horizontally cored units:
      a. Bed Joint: Full
      b. Head Joint: Face shell thickness.
   3. Vertically cored units:
      a. Bed Joint: Face shell thickness.
      b. Head Joint: Full
   4. Remove and replace mortar with fresh mortar where adjustment must be made after mortar has started to set.
   5. Keep bed and head joints uniform in width, except for minor variations required to maintain bond and locate returns.
   6. Both bed and head mortar joints standard thickness of for 4W Series use 3/8" (8mm).

D. Joint Treatment:
   1. Tool or strike mortar joints on exposed face when they are "thumb print" hard.
   2. Tool all SGT joints concave using a non-metallic tool 1-1/4" (31mm) in diameter or larger unless otherwise noted.

3.3 APPLICATION :

A. Acceptable Tolerances:
   1. Walls must be straight in plane.
   2. Maximum variation from plumb: 1/4" (6mm) in 10' 0" (3.05m); not exceeding 3/8" (10mm) in 20' 0" (6.1m).
   3. Maximum variation from level: 1/4" (6mm) in 20' 0" (6.1m); not exceeding 1/2" (13mm) in 40' 0" (12.2m) or more.
   4. Maximum variation in linear building line from location indicated: 1/4" (6mm) in 20' 0" (6.1m).

3.4 CLEANING:

A. It is intended that with careful adherence to this specification that extensive final cleaning will not be necessary. During construction, wipe glazed surface clean after tooling of joints or within 30 minutes after laying, with course rag. Keep wall clean as work progresses to avoid more difficult cleanup later. Use no metal scrapers, abrasive powders or unauthorized cleaning agents. Use wooden paddles or scrapers to clean away mortar residue or lumps. Wash with clean water. A mild detergent may be used. Rinse with clean water. Wipe with clean cloths, sponges or similar item.

B. In event of unexpected contaminations of SGT walls, perform any cleaning with other than a non-metallic scraper, stiff nylon or natural bristled brush or wooden paddle only after approval by Architect and necessary tests to insure against any wall damage.

C. If tiles are damaged the need to be replaced. Touch up marker or paint is not allowed.

END OF SECTION

SECTION 05272

ALUMINUM HANDRAILS AND RAILINGS

PART 1 – GENERAL

1.1 RELATED DOCUMENTS

A. Drawings and general provisions of the Contract, including General and Supplementary Conditions and Division 1 Specification Sections, apply to this Section.

1.2 SUMMARY

A. This Section includes the following:

1. Aluminum handrails and railings.

1.3 PERFORMANCE REQUIREMENTS

A. General: In engineering handrails and railings to withstand structural loads indicated, determine allowable design working stresses of materials based on the following:

1. Aluminum: AA 30, “Specification for Aluminum Structures.”
2. Cold-Formed Structural Steel: AISI SG-673, Part I, “Specification for the Design of Cold-Formed Steel Structural Members.”
3. For fully tempered glass in glass-supported handrails and railings, use a safety factor of 3 applied to the applicable modulus of rapture listed in “Mechanical Properties” in AAMA Aluminum Curtain Wall Series No. 12, “Structural Properties of Glass.”

B. Structural Performance of Handrails and Railings. Provide handrails and railings capable of withstanding the following structural loads without exceeding allowable design working stress of materials for handrails, railings, anchors, and connections:

1. Top Rail of Guards: Capable of withstanding the following loads applied as indicated:
   a. Concentrated load of 200 lbf applied at any point and in any direction.
   b. Uniform load of 50 lb. per linear foot applied horizontally and concurrently with uniform load of 50 lb. per linear foot applied vertically downward.
   c. Concentrated and uniform loads above need not be assumed to act concurrently.

2. Handrails Not Servicing As Top Rails: Capable of withstanding the following loads applied as indicated:

   a. Concentrated load of 200 lbf applied at any point and in any direction.
   b. Uniform load of 50 lbf/ft. applied in any direction.
   c. Concentrated and uniform loads above need not be assumed to act concurrently.

3. Infill area of Guards: Capable of withstanding a horizontal concentrated load of 50 lb. applied to 1 sq. ft. at any point in system, including panels, intermediate rails, balusters, or other elements composing infill area.

   a. Load above need not be assumed to act concurrently with loads on top rails in determining stress on guard.

C. Thermal Movements: Provide handrails and railings that allow for thermal movements resulting form the following maximum change (range) in ambient and surface temperatures by preventing

buckling, opening of joints, over stressing of components, failure of connections, and other detrimental effects. Base engineering calculation on surface temperatures of materials due to both solar heat gain and nighttime-sky heat loss.

1. Temperature Change (Range): 120 deg F (67 deg C), ambient; 180 deg F (100 deg C), material surfaces.

D. Control of Corrosion: Prevent galvanic action and other forms of corrosion by insulating metals and other materials from direct contact with incompatible materials.

1.4 SUBMITTALS

A. Product Data: For manufacturers product lines of handrails and railings assembled from standard components.

1. Include Product Data for grout, anchoring cement, and paint products.

B. Shop Drawings: Show fabrication and installation of handrails and railings. Include plans, elevations, sections, details, and attachments to other work.

C. Samples for Initial Selection: Manufacturer's color charts showing the full range of colors available for products with factory-applied color finishes.

D. Samples for Initial selection: Short sections of railing or flat sheet metal Samples showing available mechanical finishes.

E. Samples for Verification: For each type of exposed finish required, prepared on components indicated below and of same thickness and metal indicated for the Work. If finishes involve normal color and texture variations, include sample sets showing the full range of variations expected.

1. 6-inch-(150-mm-) long sections of each different linear railing member, including handrails, and top rails.
2. Fittings and brackets.
3. Assembled Samples of railings, made from full-size components, including top rail, post, handrail, and infill. Show method of finishing members at intersections. Samples need not be full height.

F. Qualification Data: For firms and persons specified in "Quality Assurance" Article to demonstrate their capabilities and experience. Include lists of completed projects with project names and addresses, names and addresses of architects and owners, and other information specified.

G. Product Test Reports: Indicating products comply with requirements, based on comprehensive testing of current products.

1.5 QUALITY ASSURANCE

A. Source Limitations: Obtain each type of railing through one source form a single manufacturer.

1.6 STORAGE

A. Store handrails and railings in a dry, well-ventilated, weather tight place.

1.7 PROJECT CONDITIONS

A. Field Measurements: Verify handrail and railing dimensions by field measurements before fabrication and indicate measurements on Shop Drawings. Coordinate fabrication schedule with construction progress to avoid delaying the work.

1. Established Dimensions: Where field measurements cannot be made without delaying the work, establish dimensions and proceed with fabricating handrails and railings without field measurements. Coordinate construction to ensure that actual dimensions correspond to established dimensions.

1.8 COORDINATION

A. Coordinate installation of anchorage for handrails and railings. Furnish Setting Drawings, templates, and directions for installing anchorages, including sleeves, concrete inserts, anchor bolts, and items with integral anchors, that are to be embedded in concrete or masonry. Deliver such items to project site in time for installation.

PART 2 – PRODUCTS

2.1 MANUFACTURERS

A. Available Manufacturers: Subject to compliance with requirements, manufacturers offering products that may be incorporated into the Work include the following:

1. Aluminum Handrails and Railings:

a. C.R. Laurence Co., Inc.
2503 E. Vernon Ave.
Los Angeles, CA. 90058

b. Thompson Architectural Railings
Tarrant, Alabama

c. Metal Fabrication Shop with a minimum of 5 years of experience.

2.2 METALS

A. General: Provide metal free from pitting, seam marks, roller marks, stains, discolorations, and other imperfections where exposed to view on finished units.

B. Aluminum: Alloy and temper recommended by aluminum producer and finisher for type of use and finish indicated, and with not less than strength and durability properties of alloy and temper designated below for each aluminum form required.

1. Extruded Bar and Tube: ASTM B 221 (ASTM B 221M), alloy 6063-T5/T52.
2. Extruded Structural Pipe and Tube: ASTM B 429, alloy 6063-T6.
3. Drawn Seamless Tube: ASTM B 210 (ASTM B 210M), alloy 6063-T832.
4. Plate and Sheet: ASTM B 209 (ASTM B 209M), alloy 6061-T6.
5. Die and Hand Forgings: ASTM B 247 (ASTM B 247M), alloy 6061-T6.
6. Castings: ASTM B 26/B 26M, alloy A356-T6.

C. Brackets, Flanges, and Anchors: Cast or formed metal of same type of material and finish as supported rails, unless otherwise indicated.

1. Provide cast brackets with flange tapped for concealed anchorage to threaded hanger bolt.
2. Provide formed or cast brackets with predrilled hole for exposed bolt anchorage.

3. Provide formed steel brackets with predrilled hole for bolted anchorage and with snap-on cover that matches rail finish and conceals bracket base and bolt head.
4. Provide brackets with interlocking pieces that conceal anchorage. Locate screws on bottom of bracket.

2.3 FASTENERS

A. Fasteners for Anchoring Handrails and Railings to other Construction: Select fasteners of type, grade and class required to produce connections suitable for anchoring handrails and railings to other types of construction indicated and capable of withstanding design loads.

B. Fasteners for Interconnecting Handrail and Railing Components: Use fasteners fabricated from same basic metal as fastened metal, unless other wise indicated. Do not use metal that are corrosive or incompatible with material joined.

1. Provide concealed fasteners for interconnecting railing components and for attaching them to other Work, unless exposed fasteners are unavoidable or are standard fastening method for handrail and railing indicated.
2. Provide Phillips flat-head machine screws for exposed fasteners, unless otherwise indicated.

C. Cast-in-Place and Post installed Anchors: Anchors of type indicated below, fabricated from corrosion-resistant materials with capability to sustain, without failure, a load equal to six times the load imposed when installed in concrete, as determined by testing per ASTM E 488 conducted by qualified independent testing agency.

1. Cast-in-place anchors.
2. Chemical anchors.
3. Expansion anchors.

2.5 GROUT AND ANCHORING CEMENT

A. Nonshrink, Nonmetallic Grout: Premixed, factory-packaged, nonstaining, noncorrosive, nongaseous grout complying with ASTM C 1107. Provide grout specifically recommended by manufacturer for interior and exterior applications.

B. Interior Anchoring Cement: Factory-packaged, nonshrink, nonstaining, hydraulic-controlled expansion cement formulation for missing with water at Project site to create pourable anchoring, patching, and grouting compound. Use for interior applications only.

2.6 FABRICATION

A. Assemble handrails and railing in shop to greatest extent possible to minimize field splicing and assembly. Disassemble units only as necessary for shipping and handling limitations. Clearly mark units for reassembly and coordinated installation. Use connections that maintain structural value of joined pieces.

B. Form changes in direction of railing members as follows:

1. As detailed.

C. Mechanical Connections: Fabricate handrails and railings by connecting members with railing manufacturer’s standard concealed mechanical fasteners and fittings, unless other wise indicated. Fabricate members and fittings to produce flush, smooth, rigid, hairline joints.

D. Brackets, Flanges, Fittings, and Anchors: Provide manufacturer's standard wall brackets, flanges, miscellaneous fittings, and anchors to connect handrail and railing members to other construction.

E. Provide inserts and other anchorage devices to connect handrails and railing to concrete or masonry. Fabricate anchorage device capable of withstanding loads imposed by handrails and railings. Coordinate anchorage devices with supporting structure.

F. Shear and punch metals cleanly and accurately. Remove burrs from exposed cut edges.

G. Cut, reinforce, drill, and tap components, as indicated, to receive finish hardware, screws, and similar items.

H. Close exposed ends of railing members with prefabricated end fittings.

I. Provide wall returns at ends of wall-mounted handrails, unless other wise indicated. Close ends of returns, unless clearance between end of railing and wall is ¼ inch (6 ram) or less.

2.7 FINISHES, GENERAL

A. Comply with NAAMM's "Metal Finishes Manual for Architectural and Metal Products" for recommendations for applying and designating finishes.

B. Appearance of Finished Work: Variations in appearance of abutting or adjacent pieces are acceptable if they are within one-half of the range of approved Samples. Noticeable variations in same piece are not acceptable. Variations in appearance of other components are acceptable if they are within the range of approved Samples and are assembled or installed to minimize contrast.

2.8 ALUMINUM FINISHES

A. Mill finish or Clear Anodized

PART 3 – EXECUTION

3.1 EXAMINATION

A. Examine substrates, where reinforced to receive anchors, to verify that locations of concealed reinforcements have been clearly marked for Installer. Locate reinforcements and mark locations if not already done.

3.2 INSTALLATION, GENERAL

A. Fit exposed connections together to form tight, hairline joints.

B. Cutting, Fitting, and Placement: Perform Cutting, drilling, and fitting required for installing handrails and railings. Set handrails and railing accurately in location, alignment, and elevation, measured from established lines and levels and free from rack.

1. Do not weld, cut, or abrade surfaces of railing components that have been coated or finished after fabrication and that are intended for field connection by mechanical or other means without further cutting or fitting.
2. Align rails so variations from level for horizontal members and from parallel with rake of steps and ramps for sloping members do not exceed ¼ inch in 12 feet (5 mm in 3 m).

C. Corrosion Protection: Coat concealed surfaces of aluminum and copper alloys that will be in contact with grout, concrete, masonry, wood, or dissimilar metals, with a heavy coat of bituminous paint.

D. Adjust handrails and railings before anchoring to ensure alignment at abutting joints. Space posts at interval indicated, but not less than that required by structural loads.

E. Fastening to In-Place Construction: Use anchorage devices and fasteners where necessary for securing handrails and railing and for properly transferring loads to in-place construction.

3.3 RAILINGS CONNECTIONS

A. Nonwelded Connections: Use mechanical joints for permanently connecting railing components. Use wood blocks and padding to prevent damage to railing members and fittings.

3.5 CLEANING

A. Immediately after erection, clean field welds, bolted connections, and abraded.

3.6 PROTECTION

A. Protect finishes of handrails and railings from damage during construction period with temporary protective coverings approved by railing manufacturer. Remove protective coverings at the time of Substantial Completion.

B. Restore finishes damaged during installation and construction period so no evidence remains of correction work. Return items that cannot be refinished in field to shop; make required alterations and refinish entire unit, or provide new units.

END OF SECTION 05720

SECTION 05500

METAL FABRICATIONS

PART 1 - GENERAL

1.01 SECTION INCLUDES

A. Shop fabricated steel items.

1.02 REFERENCES

A. ASTM A 36/A 36M - Standard Specification for Carbon Structural Steel; 2003a.

B. ASTM A 53/A 53M - Standard Specification for Pipe, Steel, Black and Hot-Dipped, Zinc-Coated, Welded and Seamless; 2002.

C. ASTM A 123/A 123M - Standard Specification for Zinc (Hot-Dip Galvanized) Coatings on Iron and Steel Products; 2002.

D. AWS A2.4 - Standard Symbols for Welding, Brazing, and Nondestructive Examination; American Welding Society; 1998.

F. ASTM A240 / A240M – 17 Standard Specification for Chromium and Chromium-Nickel Stainless Steel Plate, Sheet, and Strip for Pressure Vessels and for General Applications

1.03 SUBMITTALS

A. See Section 01300 - Administrative Requirements, for submittal procedures.

B. Shop Drawings: Indicate profiles, sizes, connection attachments, reinforcing, anchorage, size and type of fasteners, and accessories. Include erection drawings, elevations, and details where applicable.

1. Indicate welded connections using standard AWS A2.4 welding symbols. Indicate net weld lengths.

C. Welders' Certificates: Submit certification for welders employed on the project, verifying AWS qualification within the previous 12 months.

PART 2 - PRODUCTS

2.01 MATERIALS - STEEL

A. Steel Sections: ASTM A 36/A 36M.

B. Pipe: ASTM A 53/A 53M, Grade B Schedule 40, hot-dip galvanized finish.

C. Touch-Up Primer for Galvanized Surfaces: SSPC-Paint 20, Type I - Inorganic, complying with VOC limitations of authorities having jurisdiction.

D. Stainless Steel 316 ASTM A240 / A240M

2.02 FABRICATED ITEMS

A. Gate: 1-1/2" angles for frame and vertical members and top rail, Stainless Steel 316.

B. Metal Structural Connectors: Hot Dipped Galvanized Steel

C. Galvanized Steel Tube for HC Parking Sign: Hot Dipped Galvanized Steel

2.03 FINISHES - STEEL

A. Galvanizing of Non-structural Items: Galvanize after fabrication to ASTM A 123/A 123M requirements.

2.04 FABRICATION TOLERANCES

A. Squareness: 1/8 inch maximum difference in diagonal measurements.

B. Maximum Offset Between Faces: 1/16 inch.

C. Maximum Misalignment of Adjacent Members: 1/16 inch.

D. Maximum Bow: 1/8 inch in 48 inches.

E. Maximum Deviation From Plane: 1/16 inch in 48 inches.

PART 3 - EXECUTION

3.01 EXAMINATION

A. Verify that field conditions are acceptable and are ready to receive work.

3.02 PREPARATION

A. Supply setting templates to the appropriate entities for steel items required to be cast into concrete or embedded in masonry.

3.03 INSTALLATION

A. Install items plumb and level, accurately fitted, free from distortion or defects.

B. Provide for erection loads, and for sufficient temporary bracing to maintain true alignment until completion of erection and installation of permanent attachments.

C. Obtain approval prior to site cutting or making adjustments not scheduled.

3.04 ERECTION TOLERANCES

A. Maximum Variation From Plumb: 1/4 inch per story, non-cumulative.

B. Maximum Offset From True Alignment: 1/4 inch.

C. Maximum Out-of-Position: 1/4 inch.

END OF SECTION

SECTION 06100

ROUGH CARPENTRY

PART 1 - GENERAL

1.1 SUMMARY

A. Related Documents:
1. Drawings and general provisions of the Subcontract apply to this Section.
2. Review these documents for coordination with additional requirements and information that apply to work under this Section.

B. Section Includes: Execution and completion of Rough Carpentry in accordance with the Specifications and Drawings including but not limited to;
1. Dimensional lumber.
2. Roof sheathing.

C. Related Sections:
1. Division 01 Section "General Requirements."
2. Division 06 Section "Finish Carpentry'.

1.2 REFERENCES

A. General:
1. The following documents form part of the Specifications to the extent stated. Where differences exist between codes and standards, the one affording the greatest protection shall apply.
2. Unless otherwise noted, the referenced standard edition is the current one at the time of commencement of the Work.
3. Refer to Division 01 Section "General Requirements" for the list of applicable regulatory requirements.

B. ASTM International.

C. American Wood Preservers Association (AWPA).

D. Douglas Fir Protection Association (DFPA).

E. National Fire Protection Association (NFPA).

1.3 SUBMITTALS

A. Submit under provisions of Divisions 01 Section "General Requirements" and "Special Procedures."

B. Physical samples of Cypress T & G siding

1.4 QUALITY ASSURANCE

A. Inspection: Prior to work of this Section, carefully inspect the installed work of other trades and verify that such work is completed to the point where this installation may properly commence.

B. Discrepancies: In the event of discrepancy, immediately notify the Project Manager. Do not proceed with installation in areas of discrepancy until such discrepancies have been fully resolved.

C. Lumber may be rejected by the Project Manager, whether or not it has been installed, for excessive warp, twist, bow, crook, mildew, fungus, or mold, as well as for improper cutting and fitting.

1.5 DELIVERY, STORAGE, AND HANDLING

A. Materials shall be properly packed and handled while in transit so as to arrive at the job site in undamaged condition. Manufactured materials shall be delivered in suitable containers plainly marked with brand and manufacturer's name.

B. Storage arrangements shall be subject to Project Manager's approval and shall afford every access for inspection and identification of each item. Lumber shall be piled off the ground, on skids, in a manner which prevents twisting or warping and affords proper ventilation, drainage and protection from termites

and decay, rain and excessive sun. Plywood shall be protected from dampness. Material shall be protected from the elements and from damage or deterioration.

C. Damaged or deteriorated materials or assemblies shall not be used in the work and shall be replaced at no extra cost to University.

PART 2 - PRODUCTS

2.1 MATERIALS

A. General: Material shall conform to these specifications and to the applicable current editions of the Standard Specifications of ASTM and CBC. [The source of new lumber shall be certified sustainable harvested lumber.]

B. Lumber Grading:
1. Cypress: "Rules for the Measurement and Inspection of Hardwood & Cypress" The National Hardwood Lumber Association.
2. Plywood: U.S. Product Standard PS1 (latest edition), grade stamped and edge branded to DFPA Standards of the APA - The Engineered Wood Association.

C. Lumber Grade Marking: Each piece of lumber shall bear the official grade mark of the appropriate inspection bureau of the American Lumber Association, California Redwood Association, WCLIB, etc.

D. Lumber Size and Patterns: Surface four sides, dress sizes to IBC Chapter 23; work to sizes shown. Sizing and surfacing shall be as required and approved for the particular location. Framing shall be sized and where exposed shall be surfaced.

E. Tongue and Grove Wood Decking. Cypress grade no 1.

F. Shiplap Siding – Cypress grade no 1

G. Exterior wood trim – Cypress grade no 1

H. Fir Plywood: U.S. Product Standard PS1 (latest edition), grade stamped and edge branded to DFPA Standards of the American Plywood Association.

I. Dimensional lumber 2 inches (50 mm) or less in thickness shall have an average moisture content of 19 percent or less but no portion of a shipment shall be over 25 percent. Air dried lumber is desired but, if necessary, lumber may be kiln dried, however, the drying process must be slow and regulated to cause only an amount of checking comparable with air-dried stock. Wood thicker than 2-1/2 inches (63 mm) shall be well seasoned stock, moisture content not to exceed 18 percent.

J. Framing, blocking, backing, etc., unless otherwise shown, shall be Douglas Fir.

2.2 WALL, FLOOR AND ROOF SHEATHING

A. Plywood: See Paragraph 2.1 E.

2.3 LUMBER FASTENINGS (EXCEPT FOR PRESERVATIVE PRESSURE TREATED LUMBER FASTENINGS)

A. Nails and Spikes: Common Wire unless otherwise noted
1. Nailing of wood members shall conform to International Building Code and/or as indicated. Box nails are not permitted.
2. Penetration: half-length of nail into piece receiving point.
3. To connect pieces 2 inches (25 mm) net in thickness, 16d nails may be used.
4. Do not drive nails closer together than half their length, nor closer to edge of piece of lumber or timber than 1/4 their length.
5. Spacing and size of nails to be such that splitting will not occur. Pre-bore holes for nails wherever necessary to prevent splitting. Bore diameter of holes smaller than diameter of nail or spike (3/4 dia.).
6. For plywood nailing, barbed plywood nails, size and spacing as indicated. Nails shall have edge distances of not less than 3/8 inch (9.5 mm).
7. Use galvanized nails at all exterior locations.

B. Screws: Bright stainless steel wood screws:
1. Screws are to be turned into place, not driven..

2. Countersink heads.
3. Screw bolt holes the same diameter and depth as shank; bore holes for threaded portion of screws with bit no larger than base of thread.
4. Use stainless steel screws.

C. Bolts: Standard mild steel, square or hex head machine bolts with square nuts and malleable iron or steel plate washers, conforming to ASTM A307.
1. To be installed in drilled holes the diameter of the bolt, 1/32 inch (0.8 mm) to 1/16-inch (1.6 mm) over size.
2. Bolting of wood members shall conform to CBC requirements and as called for on the drawings.
3. Washers: Provide bolts bearing on wood, unless noted otherwise on the drawings, with malleable iron, or steel plate washers under heads and nuts. Do no final bolting until structure has been properly aligned.
4. Use galvanized bolts, nuts and washers where exposed to weather or where members are built-in to roofing.

D. Lag Screws: Conform to "National Design Specification for Stress Graded Lumber and Its Fastenings," NFPA, latest edition.
1. Lag screws shall be screwed and not driven into place. Penetration in each timber shall not be less than 2/3 of the length of the lag screw.
2. Hole shall be bored the same diameter and depth as the shank, after which the hole shall be continued to a depth equal to the length of the lag screw with a diameter no larger than 3/4 of the shank diameter.
3. Washers: Provide lag screws bearing on wood with malleable iron or steel plate washers under heads.
4. Use galvanized lag screws and washers.

2.4 ROUGH HARDWARE (EXCEPT FOR PRESERVATIVE PRESSURE TREATED LUMBER FASTENINGS)

A. Provide rough hardware related to carpentry work which is not specifically called out under other headings. This shall include, but not be limited to, the following:
1. General: Fastenings, devices, and other rough hardware not specifically indicated on drawings or specified herein shall be submitted for approval prior to installation. Conform to ASTM A7 or A36.
2. Framing clips, hangers, etc.: Standard products of Universal Company, Simpson, or Silver.
3. Sheet metal straps: Galvanized sheet steel of gauges and designs indicated.
4. Expansion anchors shall have a current ICC evaluation report and be size, number and type shown, installed as described in the evaluation report.
5. Powder Driven Fasteners: shall have a current ICC evaluation report and be size, number and type shown, installed as described in the evaluation report.

2.5 PRESSURE TREATMENT

A. Where called for on the drawings or specified herein, exposed lumber to receive preservative-type pressure treatment shall have a minimum moisture content of 19 percent after pressure treatment and shall be pressure treated using Ammoniacal copper quaternary compound (ACQ). Preservative shall penetrate a minimum of 3/8-inch (9.5 mm) deep into wood. Materials shall be compatible with stain coatings when specified in Division 09 Section "Painting". Fasteners and connectors used with preservative pressure treated lumber shall be G185 hot dip galvanized, Type 304 stainless steel or Type 316 stainless steel.
1. Dimensioned Lumber Posts: AWPA C-2, retention of 0.4 lbs/c.f. per quality standard for LP-22 for in-ground contact.
2. Dimensioned Lumber (all other): AWPA C-2, retention of 0.25 lbs/c.f. per quality standard LP-2 for above ground use.
3. Pre-treated lumber shall be preserved with ACQ Preserve®, Chemical Specialties Inc.
4. Field treatment shall be Boracol® or Impel® Rods, Chemical Specialties Inc. applied in accordance with the manufacturer's instructions.

B. Subcontractor shall furnish to the Project Manager, upon delivery of the members to the job, a certificate certifying that the material has been pressure treated as specified.

PART 3 - EXECUTION

3.1 WORKMANSHIP

A. General: Rough carpentry shall produce joints true, tight, and well nailed with members assembled in accordance with the Drawings and with pertinent codes and regulations.

B. Selection of lumber pieces: Carefully select members. Select individual pieces so that knots and obvious defects will not interfere with placing bolts or proper nailing or making proper connections.

3.2 WOOD PRESERVATIVE

A. All exterior framing and wood trims coming in contact with concrete or masonry, whether or not Redwood, and not specified or otherwise shown to be pressure treated shall be treated with ACQ Preserve®. Preservatives shall be compatible with stain coatings when specified in Division 09 Section "Painting".

3.3 SITE-APPLIED WOOD TREATMENT

A. Brush apply two coats of preservative treatment on site cut ends and site cut wood in contact with other wood surfaces in accordance with manufacturer's instructions.

B. Allow preservative to cure prior to erecting members.

3.4 INSTALLATION - LUMBER AND DECKING

A. Secure decking perpendicular to framing members with ends staggered over firm bearing where possible.

B. Maintain deck joints of 1/16 inch (1.6 mm).

C. Surface Flatness: +/- 1/4-inch (6 mm) in 10 feet (3 m) maximum.

3.5 INSTALLATION – SIDING, CEILINGS AND TRIM

A. Follow Cypress Siding Installation Guidelines, Southern Cypress Manufacturers Association.

B. Secure siding perpendicular to framing members with ends staggered over firm bearing where possible.

C. No exposed fasteners on T&G decking on ceilings

D. On Trim fasteners to be countersunk stainless steel screws, plugged with wood of the same species .

3.6 FRAMING

A. Install framing in strict accordance with the requirements of IBC unless more stringent requirements are specified herein or shown on the Drawings.

END OF SECTION 06100

SECTION 06160

SHEATHING

PART 1 - GENERAL

1.01 RELATED DOCUMENTS

A. Drawings and general provisions of the Contract, including General Conditions, Special Provisions and Division 1 Specifications Sections, apply to this Section.

1.02 SUMMARY

A. This Section includes the following:

1. Glass-mat wall sheathing.
2. Sheathing joint-and-penetration treatment.
3. Flexible flashing at openings in sheathing.

1.03 SUBMITTALS

A. Product Data: For each type of process and factory-fabricated product. Indicate component materials and dimensions and include construction and application details.

B. Research/Evaluation Reports: For the following:

1. Building Air and Vapor Barrier wrap.

1.04 QUALITY ASSURANCE

A. Fire-Test-Response Characteristics: For assemblies with fire-resistance ratings, provide materials and construction identical to those of assemblies tested for fire resistance per ASTM E 119 by a testing and inspecting agency acceptable to authorities having Jurisdiction.

1.05 DELIVERY, STORAGE, AND HANDLING

A. Stack panels flat with spacers between each bundle to provide air circulation. Provide for air circulation around stacks and under coverings.

PART 2 - PRODUCTS

3.01 WALL SHEATHING

A. Glass-Mat Gypsum Wall Sheathing – “Dens-Glass Gold as by G-P Gypsum Corporation: ASTM C 1177/1177M.

2. Type and Thickness: Type X, 5/8 inch (15.9 mm) thick.

3.02 FASTENERS

A. General: Provide fasteners of size and type indicated.

1. For wall sheathing panels, provide fasteners with corrosion-protective coating having a salt-spray resistance of more than 800 hours according to ASTM B 117.

3.03 SHEATHING JOINT-AND-PENETRATION TREATMENT MATERIALS

A. Sealant for Glass-Mat Gypsum Sheathing Board: Elastomeric silicone joint sealant recommended by sheathing manufacturer.

B. Air and Vapor Retarder Membrane

1. Grace Perm-A-Barrier® Wall Membrane or Approved Equal

3.04 MISCELLANEOUS MATERIALS

A. Flexible Flashing: Self-adhesive, rubberized-asphalt compound, bonded to a high-density, polyethylene film to produce an overall thickness of not less than 0.025 inch (0.6 mm).

PART 3 - EXECUTION

3.01 INSTALLATION, GENERAL

A. Securely attach to substrate by fastening as indicated, complying with the following:

1. NES NER-272 for power-driven fasteners.

2. Table 2304.9.1, "Fastening Schedule," in ICC's "International Building Code."

B. Coordinate sheathing installation with flashing and joint-sealant installation so these materials are installed in sequence and manner that exclude exterior moisture.

C. Do not bridge building expansion joints; cut and space edges of panels to match spacing of structural support elements.

3.02 GYPSUM SHEATHING INSTALLATION

A. Comply with GA-253 and with manufacturer's written instructions.

1. Fasten gypsum sheathing to cold-formed metal framing with screws.
2. Install boards with a 3/8-inch (9.5-mm) gap where non-load-bearing construction abuts structural elements.
3. Install boards with a 1/4-inch (6.4-mm) gap where they abut masonry or similar materials.

3.03 SHEATHING JOINT-AND-PENETRATION TREATMENT

A. Seal sheathing joints according to sheathing manufacturer's written instructions.

1. Apply elastomeric sealant to joints and fasteners and trowel flat. Seal other penetrations and openings.
2. Apply glass-fiber sheathing tape to glass-mat gypsum sheathing board joints, and apply and trowel silicone emulsion sealant to embed tape in sealant. Apply sealant to exposed fasteners. Seal other penetrations and openings.
3. Apply sheathing tape to joints between foam-plastic sheathing panels and at items penetrating sheathing. Apply at upstanding flashing to overlap both flashing and sheathing.

3.04 FLEXIBLE FLASHING INSTALLATION

A. Apply flexible flashing where indicated to comply with manufacturers written instructions.

1. Lap seams and junctures with other materials at least 4 inches (100 mm), except that at flashing flanges of other construction, laps need not exceed flange width.
2. Lap flashing over weather-resistant building paper at bottom and sides of openings.
3. Lap weather-resistant building paper over flashing at heads of openings.
4. After flashing has been applied, roll surfaces with a hard rubber or metal roller.

END OF SECTION

SECTION 06400
ARCHITECTURAL WOODWORK

PART 1 - GENERAL

1.01 SUMMARY: Work includes kitchen cabinets and window sills

1.02 RELATED WORK (Specified in other Sections)

A. Flush panel walk-thru doors

1.03 MINIMUM SPECIFICATIONS

"Quality Standards of the Architectural Woodwork Industry" (AWI)

1.04 REQUIRED SUBMITTALS (For selection, review, approval)

A. SHOP DRAWINGS: Indicate species, AWI Grade, construction details and location of each woodwork item

B. SAMPLES: Plastic laminate

PART 2 - PRODUCTS

2.01 APPROVED SUPPLIERS

A. Cabinet Shop with more than 5 years experience.

2.02 PLASTIC LAMINATE

A. THICKNESS: .050" typical, except .030" for exposed vertical surfaces

B. LINER PANEL: .020" thick

C. BACKING SHEET: Thickness as recommended by AWI

D. EDGES: Self-edge unless shown or specified otherwise

E. PATTERN RANGE: Include all standard patterns and solid colors; to be selected by Architect

F. BRANDS: Submit two of the following, or others if approved by the Architect:

1. Wilsonart
2. Formica
3. Nevamar
4. Sterling Products, Inc., Pionite Division

2.03 SOLID STOCK

A. MOISTURE CONTENT: Percent of moisture in relation to oven-dry weight shall be between 8 to 13 percent at time of installation

B. KNOTS: Occasional pin knots permitted provided they are tight and smooth

C. PAINT GRADE SOFTWOOD: Ponderosa or white pine; finger-joints not permitted

D. PAINT GRADE HARDWOOD: Any close-grained species, including Parana Pine; oak,

elm or similar coarse grain species not permitted

E. PRESERVATIVE TREATMENT: Pressure impregnated with water-borne CCA; .40 pcf

retention; each piece marked with AWPA data including retention; for use at all cabinet

bases.

2.04 SOFTWOOD PLYWOOD

A. GENERAL: Product Standard PS 1 marked with APA stamp; Douglas Fir; marked for

exterior use; waterproof glue; no raised grain acceptable

B. PLIES:

1. 3/4" MATERIAL: 7 ply
2. 1-1/8" MATERIAL and THICKER: 9 ply
3. FACE PLIES: Grade B or better
4. INTERIOR PLIES: Grade C or better

2.05 CABINETS

DEFINITIONS:

A. EXPOSED: (Plastic laminate in thickness as specified) Surfaces visible when doors and drawers are closed; open cabinets, open shelves; bottom of upper cabinets; top and bottom of open shelving

B. SEMI-EXPOSED: (Plastic laminate acceptable) Surfaces that become visible when drawers and opaque doors are opened; tops of cases 6 ft. 6 in. or more above floor; top and bottom of shelving behind doors; backs of hinged doors

C. CONCEALED: (Backing sheet acceptable) Surfaces permanently hidden after installation, such as the back side of cabinets against walls and underside of countertops

MATERIAL THICKNESS: The following thicknesses shall apply except when shown thicker on the Drawings:

A. PANELS, BOTTOMS, ENDS, DIVISIONS: 3/4" thick

B. BACKS: 3/8" plywood, with continuous 1" x 4" hardwood or 3/4" X 4" plywood

anchor cleat at top and bottom of wall hung cabinets

C. FACE PLATES: Equal to door thickness, 3/4" minimum

D. WEB FRAMES: 3/4" minimum

E. DRAWER FACES: 3/4"

F. DRAWER FRONTS, BACKS, SIDES: 1/2", solid light colored hardwood; sealed or

cabinet liner finish, as selected

G. DRAWER BOTTOMS: 1/4" tempered hardboard; widths over 20" reinforced or greater thickness; cabinet liner finish

H. SHELVES (max. spans): 3/4" plywood up to 24"; 1" plywood up to 30"; l-1/4"

plywood 30" to 36"; 1-1/4" plywood with 1 x 3 solid hardwood edges over 36"

I. COUNTER TOPS: 1-1/2" – Quartz - color as approved on ¾" plywood

J. COUNTER TOP BACK AND END SPLASHES: 3/4"; same material as countertop

K. DOORS (less than 42" tall): 3/4"

L. DOORS (42" tall to 80" tall): 1"

DUST PANELS: Not required unless shown on the Drawings

BASES: Constructed of preservative treated solid lumber at all cabinets; toe space 3" deep and 4" high except when shown otherwise on Drawings; 1/2" deep recessed base across exposed ends. No "through to floor" panels or backs.

DOORS: Use overlay type, except where shown otherwise on Drawings; provide continuous laminate edge banding, color to match plastic laminate or as selected.

DRAWERS: Tongue and groove joints at sides, front and back; dado sides to receive bottom; provide continuous .laminate at drawer face, color to match plastic laminate or as selected. Melamine white sheets approved.

SHELVES: All edges .laminate edge banding; notched at ends to receive shelf standards; omit notching if optional drilled holes at 1-1/4" o.c. used. 070207.005 GCRBC

2.06 CABINET HARDWARE

A. SCOPE: Include hardware, preparation and installation

B. APPROVED SUPPLIERS/BRANDS: Those listed are approved; equal products of other

well-known, nationally distributed suppliers subject to approval

C. SHELF SUPPORTS:

1. END STANDARDS: (Typical) KV 255ZC, surface mounted
2. SUPPORTS: KV 256 ZC
3. SUPPORTS (optional): KV 348 clips (white), for use with drilled holes 1-1/4" o.c.
4. WALL STANDARDS: KV 80 ANO
5. SHELF BRACKETS: KV 180 ANO

D. COUNTER SUPPORTS: Richelieu EH1824 Alum Mill Finish

E. DOOR/DRAWER PULLS: Trimco 4" x 5/16" dia. x US26D dull chrome, hairpin shape,

or Outwater Plastics, Inc., semi-flush ABS; one type throughout

F. DRAWER SLIDES: KV 8400; full extension, 3 sections; 100 lb. load

G. HINGES: (Heavy duty, exposed)

1. NUMBER: 2 per door less than 42" high; 3 per door 42" high to less than 72" high; 4 per door 72" high or more
2. TYPE: 2-3/4" five knuckles, tight pin, wrap around design, 270° swing, hospital tips

3. BRAND: Rockford Process Control, Inc. (RPC)
4. FINISH: Dull chrome

H. DOOR CATCHES: Magnetic, 10 lb. pull; Elbow catches at double doors

I. DOOR AND DRAWER LOCKS

a. Sliding Glass Lock – KN Racket Lock 963KA 440 CHR

b. Cabinet Door Lock – KN Plunger Lock 984KA 90 NP

2.07 Window Sills

A. Quartz window sills at all exterior windows – NOT AT CLERESTORY. 3/4" exterior AC plywood with 1-1/2" face, 3/4" return ears beyond window opening, depth 3/4" more than wall depth, provide 3/8" x 5/8" painted pine apron.

2.08 Bay Window Sill

B. Quartz bay window floor surface

2.08 Fabric Wrapped Tackboard

C. Designer Series fabrics on laminated panel form, Colorfast, soil and stain resistant Fabric meets ASTM-E 84 Flame Tunnel Test Class “A” Rating. Coreboard

PART 3 - EXECUTION

3.01 INSTALLATION

A. POSITIONING: Place appropriately level, plumb and at right angles to adjacent work.

B. FITTING: Where field cutting or trimming is necessary, perform in a neat, accurate, professional manner without damaging the products or adjacent work.

C. ANCHORAGE: Attach securely so the products will perform to their maximum ability without damage resulting from inadequate fastenings.

D. FILLER PANELS: Provide matching fillers at cabinets, including bottom and tops of upper cabinets, where cabinets meet walls; widths as required.

E. SEALANT: Install clear silicone sealant at juncture with walls after wall is painted.

PART 4 - SCHEDULES

4.01 WORK SCHEDULE (All AWI Custom Grades, except as noted)

A. CABINETWORK:

1. EXPOSED SURFACES: Plastic laminate
2. SEMI-EXPOSED SURFACES: (Except inside drawers) Plastic laminate
3. CONCEALED SURFACES: Backing Sheet
4. DRAWER INTERIORS: Factory applied clear sealer, or liner panel, as selected
5. LOCATIONS: Typical

END OF SECTION

SECTION 07211

FOAMED-IN-PLACE INSULATION

PART 1 - GENERAL

1.1 RELATED DOCUMENTS

A. Drawings and general provisions of the Contract, including General and Supplementary Conditions and Division 01 Specification Sections, apply to this Section.

1.2 SUMMARY

A. Section Includes:

1. Closed-cell spray polyurethane foam.

1.3 ACTION SUBMITTALS

A. Product Data: For each type of product.

1.4 INFORMATIONAL SUBMITTALS

A. Qualification Data: For Installer.

B. Product Test Reports: For each product, for tests performed by a qualified testing agency, **IAS International Accreditation Service**.

C. Evaluation Reports: For spray-applied polyurethane foam-plastic insulation, from [**ICC-ES**]

1.5 QUALITY ASSURANCE

A. Installer Qualifications: An authorized representative who is trained and approved by manufacturer. Any repairs by an Icynene licensed contractor.

B. Surface-Burning Characteristics: As determined by testing identical products according to ASTM E 84 by a qualified testing agency. Identify products with appropriate markings of applicable testing agency.

C. Fire Resistance Characteristics: As determined by testing identical products (based on a 4-inch (100-mm) minimum thickness) according to ASTM E 119 by a qualified testing agency. Identify products with appropriate markings of applicable testing agency.

1.6 DELIVERY, STORAGE, AND HANDLING

A. Protect spray polyurethane foam components as follows:

1. Component A and B: Store between 60 deg F (15 deg C) and 90 deg F (32 deg C).
2. Component B can be frozen but must be protected from overheating over 120 deg F (49 deg C) and prolonged storage over 100 deg F (37 deg C).
3. Component B: Follow manufacturer's published installation instructions.
4. Components should be a matched set (system) as supplied by the manufacturer.
5. Use components within their labeled shelf life.
6. Use components as supplied with no site alterations or additions.

1.7 WARRANTY

A. Refer to manufacturer's standard warranty terms.

PART 2 - PRODUCTS

2.1 PERFORMANCE REQUIREMENTS

A. Air Material Air-Leakage Rate: Maximum material air-leakage rate of less than 0.004 cfm/sq. ft. (0.0203 L/s x sq. m) under a pressure differential of 0.3 in w.g. (1.6 psf) (0.02 L/sq. m at 75 Pa) per [**ASTM E2178**] [**ASTM E282**].

B. Surface-Burning Characteristics: Comply with ASTM E 84; testing by a qualified testing agency. Identify products with appropriate markings of applicable testing agency.

1. Flame-Spread Index: 25 or less.
2. Smoke-Development Index: 450 or less.

C. Fire Propagation Characteristics: Passes NFPA 285 testing as part of an approved assembly.

D. Compressive Strength: Minimum 40 psi (276 kPa) (ASTM C 1029, Type II).

E. Sustainability Requirements: Provide spray polyurethane foam insulation as follows:

1. Low Emitting: Insulation tested according to CA/DPH/EHLB/v1.1-2010.
2. Resistant to fungal growth as per ASTM C 1338.
3. Contains no PBDE.

2.2 CLOSED-CELL SPRAY-POLYURETHANE FOAM

A. Closed-Cell Spray-Polyurethane Foam: ASTM C 1029, Type II, minimum density of 2.5 lb/cu. ft. (38 kg/cu. m) and minimum aged R-value at 1-inch (25.4-mm) thickness of 7.0 deg F x h x sq. ft./Btu at 75 deg F (1.23 K x sq. m/W at 24 deg C).

1. Basis-of-Design Product: Subject to compliance with requirements, provide Icynene Inc.; Icynene ProSeal or comparable product by one of the following:

a. BASF Corporation.
b. Dow Chemical Company (The).
c. Or approved equal

B. Primer: Material recommended by insulation manufacturer where required for adhesion of insulation to substrates.

PART 3 - EXECUTION

3.1 PREPARATION

A. Verify that substrates are clean, dry, and free of substances that are harmful to insulation.

B. Priming: Prime substrates where recommended by insulation manufacturer. Apply primer to comply with insulation manufacturer's written instructions. Confine primers to areas to be insulated; do not allow spillage or migration onto adjoining surfaces.

3.2 INSTALLATION

A. Comply with insulation manufacturer's written instructions applicable to products and applications.

B. Spray insulation to envelop entire area to be insulated and fill voids.

C. Apply in multiple passes to not exceed maximum thicknesses recommended by manufacturer. Do not spray into rising foam.

D. Do not apply insulation within 3 inches (76 mm) of heat emitting devices or where the temperature is in excess of 200 deg F (93 deg C) per ASTM C 411, or in accordance with applicable codes.

E. Framed Construction: Install into cavities formed by framing members to achieve thickness indicated on Drawings.

F. Miscellaneous Voids: Apply according to manufacturer's written instructions.

3.3 PROTECTION

A. Protect installed insulation from damage due to harmful weather exposures, physical abuse, and other causes.

B. Thermal Protection: Protect installed spray-polyurethane-foam insulation with qualified thermal or ignition barrier per applicable building codes.

3.4 INSTALLATION OF AIR BARRIER COMPONENTS

A. Install air-barrier components membranes and sealants as indicated on Drawings for spray-polyurethane foam as part of an air-barrier system.

END OF SECTION 07211

SECTION 07424

COMPOSITE BUILDING PANELS

Part 1: General

1.01 SCOPE

A. SECTION INCLUDES

1. The extent of panel system work is indicated on the drawings and in these specifications.
2. Panel system requirements include the following components:
   a. Aluminum faced composite panels with mounting system. Panel mounting system including anchorages, shims, furring, fasteners, gaskets and sealants, related flashing adapters, and masking (as required) for a complete watertight installation.
   b. Parapet coping, column covers, soffits, sills, border, and filler items indicated as integral components of the panel system or as designed.
   c. Interior panel system work that basically matches exterior panel system work.

B. RELATED DOCUMENTS

Drawings and general provisions of the Contract, including General and Supplementary Conditions, Division 1 Specification Sections, and Technical Specification Divisions 2 through 16 apply to this Section.

C. RELATED WORK SPECIFIED ELSEWHERE

1. Section 05100: Structural steel
2. Section 06100: Back up walls
3. Section 07200: Insulation
4. Section 07600: Metal flashing and counter flashing
5. Section 07920: Caulking and sealants
6. Section 09200: Interior wall finishes

1.02 QUALITY ASSURANCE

1. Composite Panel Manufacturer shall have a minimum of 20 years experience in the manufacturing of this product.
2. Composite Panel Manufacturer shall be solely responsible for panel manufacture and application of the finish.
3. Fabricator/installer shall be acceptable to the composite panel manufacturer.
4. Fabricator/Installer shall have a minimum 5 years experience of metal panel work similar in scope and size to this project.
5. Field measurements should be taken prior to the completion of shop fabrication whenever possible. However, coordinate fabrication schedule with construction progress as directed by the Contractor to avoid delay of work. Field fabrication may be allowed to ensure proper fit. However, field fabrication shall be kept to

an absolute minimum with the majority of the fabrication being done under controlled shop conditions.

6. Shop drawings shall show the preferred joint details providing a watertight and structurally sound wall panel system that allows no uncontrolled water penetration on the inside face of the panel system as determined by ASTM E 331. Systems not utilizing a construction sealant at the panel joints (i.e. Rout and Return Dry and Rear Ventilated System) shall provide a means of concealed drainage with baffles and weeps for water which may accumulate in members of the system.
7. Maximum deviation from vertical and horizontal alignment of erected panels: 6mm (1/4") in 6m (20') non-accumulative.
8. Panel fabricator/installer shall assume undivided responsibility for all components of the exterior panel system including, but not limited to attachment to sub-construction, panel to panel joinery, panel to dissimilar material joinery, and joint seal associated with the panel system.
9. Composite panel manufacturer shall have established a Certification Program acceptable to the local Code Authorities.

1.03 References

A. Aluminum Association

1. AA-C22-A41: Anodized - Clear Coatings.
2. AA-C22-A42: Anodized - Integral Color Coatings.

B. American Architectural Manufacturers Association

1. AAMA 508-05: Voluntary Test Method and Specification for Pressure Equalized Rain Screen Wall Cladding Systems

1.04 SUBMITTALS

A. Submittals shall be in conformance with Section 01300 .

B. Samples

1. Panel System Assembly: Two samples of each type of assembly. 304mm (12") x 304mm (12") minimum.
2. Two samples of each color or finish selected, 76mm (3") x 102mm (4") minimum.

C. Shop Drawings

Submit shop drawings showing project layout and elevations; fastening and anchoring methods; detail and location of joints, sealants, and gaskets, including joints necessary to accommodate thermal movement; trim; flashing; and accessories.

D. Two copies of manufacturer's literature for panel material.

1.05 DELIVERY, STORAGE AND HANDLING

1. Protect finish and edges in accordance with panel manufacturer's recommendations.
2. Store material in accordance with panel manufacturer's recommendations.

Part 2: Products

2.01 PANELS

A. Composite Panels

1. ALUCOBOND material manufactured by 3A Composites USA, Inc. 208 West 5th Street, Benton, KY 42025 (800-626-3365 or 270-527-4200)
2. Items of the same function and performance. Approval shall be based on documentation submitted showing the adequacy of the material.

B. Thickness: 4mm (0.157")

C. Product Performance

1. Bond Integrity

When tested for bond integrity, in accordance with ASTM D1781 (simulating resistance to panel delamination), there shall be no adhesive failure of the bond a) between the core and the skin nor b) cohesive failure of the core itself below the following values:

2. Peel Strength:

115 N mm/mm (22.5 in lb/in) as manufactured

115 N mm/mm (22.5 in lb/in) after 21 days soaking in water at 70°F

3. Fire Performance

ASTM E 84 Flame Spread Index must be less than 25, Smoke Developed Index must be less than 450.

ASTM D 1929 A self ignition temperature of 650oF or greater

ASTM D-635 Requires a CC1 classification

D. Finishes

1. Anodized:
Color (Clear): AA-C22-A41 Architectural Class I

2.02 PANEL FABRICATION

A. Composition:

Two sheets of aluminum sandwiching a solid core of extruded thermoplastic material formed in a continuous process with no glues or adhesives between dissimilar materials. The core material shall be free of voids and/or air spaces and not contain foamed insulation material. Products laminated sheet by sheet in a batch process using glues or adhesives between materials shall not be acceptable.

B. Aluminum Face Sheets:

Thickness: 0.50mm (0.0197") (nominal)

Alloy: AA5000 Series (Anodized material)

C. Panel Weight:

1. 4mm (0.157"): 1.12 lbs./ft²

D. Tolerances

1. Panel Bow: Maximum 0.8% of any 1828mm (72”) panel dimension.
2. Panel Dimensions: Field fabrication shall be allowed where necessary, but shall be kept to an absolute minimum. All fabrication shall be done under controlled shop conditions when possible.

3. Panel lines, breaks, and angles shall be sharp, true, and surfaces free from warp and buckle.
4. Maximum deviation from panel flatness shall be 1/8" in 5'0" on panel in any direction for assembled units. (Non-accumulative - No Oil Canning)

E. System Characteristics

1. Plans, elevations, details, characteristics, and other requirements indicated are based upon standards by one manufacturer. It is intended that other manufacturers, receiving prior approval, may be acceptable, provided their details and characteristics comply with size and profile requirements, and material/performance standards.
2. System must not generally have any visible fasteners, telegraphing or fastening on the panel faces or any other compromise of a neat and flat appearance.
3. System shall comply with the applicable provisions of the "Metal Curtain Wall, Window, Storefront, and Entrance Guide Specifications Manual" by AAMA and ANSI/AAMA 302.9 requirements for aluminum windows.
4. Fabricate panel system to dimension, size, and profile indicated on the drawings based on a design temperature of 70°F.
5. Fabricate panel system so that no restraints can be placed on the panel, which might result in compressive skin stresses. The installation detailing shall be such that the panels remain flat regardless of temperature change and at all times remain air and water tight.
6. The finish side of the panel shall have a removable plastic film applied prior to fabrication, which shall remain on the panel during fabrication, shipping, and erection to protect the surface from damage.

F. System Type

1. Rout and Return Dry:
   System must provide a perimeter aluminum extrusion with integral weather-stripping as detailed on drawings.

2.03 ACCESSORIES

1. Extrusions, formed members, sheet, and plate shall conform with ASTM B209 and the recommendations of the manufacturer.
2. Sealants and gaskets within the panel system shall be as per manufacturer's standards to meet performance requirements.
3. Fabricate flashing materials from 0.030" minimum thickness aluminum sheet painted to match the adjacent curtain wall / panel system where exposed. Provide a lap strap under the flashing at abutted conditions and seal lapped surfaces with a full bed of non-hardening sealant.
4. Fasteners (concealed/exposed/non-corrosive): Fasteners as recommended by panel manufacturer. Do not expose fasteners except where unavoidable and then match finish of adjoining metal.

Part 3: EXECUTION

3.01 INSPECTION

1. Surfaces to receive panels shall be even, smooth, sound, clean, dry and free from defects detrimental to work. Notify contractor in writing of conditions detrimental to proper and timely completion of the work. Do not proceed with erection until unsatisfactory conditions have been corrected.

3.02 INSTALLATION

1. Erect panels plumb, level, and true.
2. Panels shall be erected in accordance with an approved set of shop drawings.
3. Anchor panels securely per engineering recommendations and in accordance with approved shop drawings to allow for necessary thermal movement and structural support.
4. Conform to panel fabricator's instructions for installation of concealed fasteners.
5. Do not install component parts that are observed to be defective, including warped, bowed, dented, abraised, and broken members.
6. Do not cut, trim, weld, or braze component parts during erection in a manner which would damage the finish, decrease strength, or result in visual imperfection or a failure in performance. Return component parts which require alteration to shop for refabrication, if possible, or for replacement with new parts.
7. Separate dissimilar metals and use gasketed fasteners where needed to eliminate the possibility of corrosive or electrolytic action between metals.

3.03 ADJUSTING AND CLEANING

1. Remove and replace panels damaged beyond repair as a direct result of the panel installation. After installation, panel repair and replacement shall become the responsibility of the General Contractor.
2. Repair panels with minor damage.
3. Remove masking (if used) as soon as possible after installation. Masking intentionally left in place after panel installation on an elevation, shall become the responsibility of the General Contractor.
4. Any additional protection, after installation, shall be the responsibility of the General Contractor.
5. Make sure weep holes and drainage channels are unobstructed and free of dirt and sealants.
6. Final cleaning shall not be part of the work of this section.

SECTION 07542

TPO MECHANICALLY FASTENED ROOFING SYSTEM

PART 1 GENERAL

The project, includes the provision of a complete Firestone Building Products UltraPly™ TPO Mechanically Attached Membrane Roofing System.

1.01 SUMMARY

A. Furnish and install elastomeric sheet roofing system, including:
   1. Roofing manufacturer's requirements for the specified warranty.
   2. Preparation of roofing substrates.
   3. Wood nailers for roofing attachment.
   4. Insulation.
   5. Cover boards.
   6. Elastomeric membrane roofing.
   7. Metal roof edging and copings.
   8. Flashings.
   10. Other roofing-related items specified or indicated on the drawings or otherwise necessary to provide a complete weatherproof roofing system.

B. Disposal of demolition debris and construction waste is the responsibility of Contractor. Perform disposal in manner complying with all applicable federal, state, and local regulations.

C. Comply with the published recommendations and instructions of the roofing membrane manufacturer, at http://manual.fsbp.com.

D. Commencement of work by the Contractor shall constitute acknowledgement by the Contractor that this specification can be satisfactorily executed, under the project conditions and with all necessary prerequisites for warranty acceptance by roofing membrane manufacturer. No modification of the Contract Sum will be made for failure to adequately examine the Contract Documents or the project conditions.

1.02 RELATED SECTIONS

A. Division 7

1.03 REFERENCES

A. Referenced Standards: These standards form part of this specification only to the extent they are referenced as specification requirements.

B. ASTM C 1177/C 1177M - Standard Specification for Glass Mat Gypsum Substrate for Use as Sheathing; 2004.

C. ASTM C 1289 - Standard Specification for Faced Rigid Cellular Polyisocyanurate Thermal Insulation Board; 2004.

D. ASTM C 1549 - Standard Test Method for Determination of Solar Reflectance Near Ambient Temperature Using a Portable Solar Reflectometer; 2004.

E. ASTM D 638 - Standard Test Method for Tensile Properties of Plastics; 2003.

F. ASTM D 1004 - Standard Test Method for Initial Tear Resistance of Plastic Film and Sheeting; 2003.

G. ASTM D 3273 - Standard Test Method for Resistance to Growth of Mold on the Surface of Interior Coatings in an Environmental Chamber; 2000.

H. ASTM D 6878 - Standard Specification for Thermoplastic Polyolefin Based Sheet Roofing; 2003.

I. ASTM E 84 - Standard Test Method for Surface Burning Characteristics of Building Materials; 2005.

J. ASTM E 136 - Standard Test Method for Behavior of Materials in a Vertical Tube Furnace At 750 Degrees C; 2004.

K. FM 1-28 - Design Wind Loads; Factory Mutual System; 2002.

L. FM 1-29 - Roof Deck Securement and Above Deck Roof Components; Factory Mutual System; 2005.

M. PS 1 - Construction and Industrial Plywood; 1995.

N. PS 20 - American Softwood Lumber Standard; 2005.

O. SPRI ES-1 - Wind Design Standard for Edge Systems Used with Low Slope Roofing Systems; 2003. (ANSI/SPRI ES-1).

1.04 SUBMITTALS

A. Product Data:
1. Provide membrane manufacturer's printed data sufficient to show that all components of roofing system, including insulation and fasteners, comply with the specified requirements and with the membrane manufacturer's requirements and recommendations for the system type specified; include data for each product used in conjunction with roofing membrane.
2. Where UL or FM requirements are specified, provide documentation that shows that the roofing system to be installed is UL-Classified or FM-approved, as applicable; include data itemizing the components of the classified or approved system.
3. Installation Instructions: Provide manufacturer's instructions to installer, marked up to show exactly how all components will be installed; where instructions allow installation options, clearly indicate which option will be used.

B. Shop Drawings: Provide:
1. The roof membrane manufacturer's standard details customized for this project for all relevant conditions, including flashings, base tie-ins, roof edges, terminations, expansion joints, penetrations, and drains.

C. Pre-Installation Notice: Copy to show that manufacturer's required Pre Installation Notice (PIN) has been accepted and approved by the manufacturer.

D. Executed Warranty.

E. Specimen Warranty: Submit prior to starting work.

F. Samples: Submit samples of each product to be used.

1.05 QUALITY ASSURANCE

A. Applicator Qualifications: Roofing installer shall have the following:
1. Current Firestone Master Contractor status.
2. At least five years experience in installing specified system.

B. Pre-Installation Conference: Before start of roofing work, Contractor shall hold a meeting to discuss the proper installation of materials and requirements to achieve the warranty.
   1. Require attendance with all parties directly influencing the quality of roofing work or affected by the performance of roofing work.
   2. Notify Architect well in advance of meeting.

1.06 DELIVERY, STORAGE AND HANDLING

A. Deliver products in manufacturer's original containers, dry and undamaged, with seals and labels intact and legible.

B. Store materials clear of ground and moisture with weather protective covering.

C. Keep combustible materials away from ignition sources.

1.07 WARRANTY

A. Comply with all warranty procedures required by manufacturer, including notifications, scheduling, and inspections.

B. Warranty: Firestone 30 year Platinum Red Shield Limited Warranty covering membrane, roof insulation, and membrane accessories.

Warranty Duration	Membrane Thickness, required minimums
30 year	Only .080 UltraPly Platinum TPO

   1. Limit of Liability: No dollar limitation.
   2. Scope of Coverage: Repair leaks in the roofing system caused by:
      a. Ordinary wear and tear of the elements.
      b. Manufacturing defect in Firestone brand materials.
      c. Defective workmanship used to install these materials.
      d. Damage due to winds up to 150 mph.
   3. Not Covered:
      a. Damage due to winds in excess of 150 mph.
      b. Intentional damage.
      c. Unintentional damage due to normal rooftop inspections, maintenance, or service.

PART 2 PRODUCTS

2.01 MANUFACTURERS

A. Basis of Design Manufacturer - Roofing System: Firestone Building Products Co., Carmel, IN. www.firestonebpco.com.
   1. Roofing systems manufactured by others may be acceptable provided the roofing system is completely equivalent in materials and warranty conditions and the manufacturer meets the following qualifications:
      a. Specializing in manufacturing the roofing system to be provided.
      b. Minimum ten years of experience manufacturing the roofing system to be provided.
      c. Able to provide a no dollar limit, single source roof system warranty
      d. ISO 9002 certified.

B. Manufacturer of Insulation and Cover Board: Same manufacturer as roof membrane.

C. Manufacturer of Metal Roof Edging: Same manufacturer as roof membrane.
   1. Metal roof edging products by other manufacturers are not acceptable.
   2. Field- or shop-fabricated metal roof edgings are not acceptable.

D. Substitution Procedures: See Instructions to Bidders.
   1. Submit evidence that the proposed substitution complies with the specified requirements.

2.02 ROOFING SYSTEM DESCRIPTION

A. Roofing System:
   1. Membrane: Thermoplastic Polyolefin (TPO).
   2. Thickness: As specified elsewhere.
   3. Membrane Attachment: Mechanically attached.
   4. Slope: Deck is sloped but not enough; provide additional slope of 1/4 inch per foot (1:48) by means of tapered insulation.
   5. Comply with applicable local building code requirements.
   6. Provide assembly having Underwriters Laboratories, Inc. (UL) Class A Fire Hazard Classification.
   7. Product is Texas Department of Insurance Windstorm Certified to meet Design Pressures of The Project.

B. Insulation:
   1. Total System R Value: 6, Average.
   2. Maximum Board Thickness: 2 inches (50 mm); use as many layers as necessary; stagger joints in adjacent layers.

System R Value	Total Iso Insulation Thickness, nominal

   3. Base Layer: Polyisocyanurate foam board, non-composite.
      a. Attachment: Mechanical through fastening.
   4. Top Layer: Polyisocyanurate foam board, non-composite.
      a. Attachment: Mechanical through fastening.
   5. Tapered Insulation: Provide tapered insulation to maintain 1/4" / ft. roof slope.

C. Cover Board: High Density Polyisocyanurate Cover Board:
   1. Thickness: 0.5 inch (12.7mm).
   2. R-Value: 2.5 based on ASTM tests C158 and C177.
      a. Attachment: Mechanical through fastening.

2.03 TPO MEMBRANE MATERIALS

A. Membrane: Flexible, heat weldable sheet composed of thermoplastic polyolefin polymer and ethylene propylene rubber; complying with ASTM D 6878, with polyester weft inserted reinforcement and the following additional characteristics:
   1. Thickness: 0.060 inch (1.52 mm) plus/minus 10 percent, with coating thickness over reinforcement of 0.024 inch (0.61 mm) plus/minus 10 percent.
   2. Puncture Resistance: 265 lbf (1174 N), minimum, when tested in accordance FTM 101C Method 2031.
   3. Solar Reflectance: 0.79, minimum, when tested in accordance with ASTM C 1549.
   4. Color: White
   5. Acceptable Product: UltraPly TPO by Firestone.

B. Membrane Fasteners: Type and size as required by roof membrane manufacturer for roofing system and warranty to be provided; use only fasteners furnished by roof membrane manufacturer.

C. Curb and Parapet Flashing: Same material as membrane, with encapsulated edge which eliminates need for seam sealing the flashing-to-roof splice; precut to 18 inches (457 mm) wide.

D. Formable Flashing: Non-reinforced, flexible, heat weldable sheet, composed of thermoplastic polyolefin polymer and ethylene propylene rubber.
   1. Thickness: 0.060 inch (1.52 mm) plus/minus 10 percent.
   2. Tensile Strength: 1550 psi (10.7 MPa), minimum, when tested in accordance with ASTM D 638 after heat aging.
   3. Elongation at Break: 650 percent, minimum, when tested in accordance with ASTM D 638 after heat aging.
   4. Tearing Strength: 12 lbf (53 N), minimum, when tested in accordance with ASTM D 1004 after heat aging.
   5. Color: Same as field membrane.
   6. Acceptable Product: UltraPly TPO Flashing by Firestone.

E. Tape Flashing: 5-1/2 inch (140 mm) nominal wide TPO membrane laminated to cured rubber polymer seaming tape, overall thickness 0.065 inch (1.6 mm) nominal; TPO QuickSeam Flashing by Firestone.

F. Pourable Sealer: Two-part polyurethane, two-color for reliable mixing; Pourable Sealer by Firestone.

G. Seam Plates: Steel with barbs and Galvalume coating; corrosion-resistance complying with FM 4470.

H. Termination Bars: Aluminum bars with integral caulk ledge; 1.3 inches (33 mm) wide by 0.10 inch (2.5 mm) thick; Firestone Termination Bar by Firestone.

I. Cut Edge Sealant: Synthetic rubber-based, for use where membrane reinforcement is exposed; UltraPly TPO Cut Edge Sealant by Firestone.

J. General Purpose Sealant: EPDM-based, one part, white general purpose sealant; UltraPly TPO General Purpose Sealant by Firestone.

K. Molded Flashing Accessories: Unreinforced TPO membrane pre-molded to suit a variety of flashing details, including pipe boots, inside corners, outside corners, etc.; UltraPly TPO Small and Large Pipe Flashing by Firestone.

2.04 ROOF INSULATION AND COVER BOARDS

A. Polyisocyanurate Board Insulation: Closed cell polyisocyanurate foam with black glass reinforced mat laminated to faces, complying with ASTM C 1289 Type II Class 1, with the following additional characteristics:
   1. Thickness: As indicated elsewhere.
   2. Size: 48 inches (1220 mm) by 96 inches (2440 mm), nominal.
      a. Exception: Insulation to be attached using adhesive or asphalt may be no larger than 48 inches (1220 mm) by 48 inches (1220 mm), nominal.
   3. R-Value (LTTR): 1.0 inch (25 mm) Thickness: 6.0, minimum.
   4. Compressive Strength: 20 psi (138 kPa) when tested in accordance with ASTM C 1289.
   5. Ozone Depletion Potential: Zero; made without CFC or HCFC blowing agents.

6. Recycled Content: 19 percent post-consumer and 15 percent post-industrial, average.
7. Acceptable Product: ISO 95+ polyiso board insulation by Firestone

B. High Density Polyisocyanurate Cover Board: Non-combustible, water resistant high density, closed cell polyisocyanurate core with coated glass mat facers, complying with ASTM D 1623, and with the following additional characteristics:
   1. Size: 48 inches (1220 mm) by 96 inches (2440 mm), nominal.
      a. Exception: Board to be attached using adhesive or asphalt may be no larger than 48 inches (1220 mm) by 48 inches (1220 mm), nominal.
   2. Thickness: 0.5 inch (12.7mm).
   3. R-Value: 2.5 based on ASTM tests C158 and C177.
   4. Surface Water Absorption: <3%, maximum, when tested in accordance with ASTM C 209.
   5. Compressive Strength: 120psi, when tested in accordance with ASTM 1621.
   6. Density: 5pcf, when tested in accordance with ASTM 1622.
   7. Factory Mutual approved for use with FM 1-60 and 1-90 rated roofing assemblies.
   8. Mold Growth Resistance: Passed, when tested in accordance with ASTM D 3273.
   9. Acceptable Product: ISOGARD HD Cover Board by Firestone.

C. Insulation Fasteners: Type and size as required by roof membrane manufacturer for roofing system and warranty to be provided; use only fasteners furnished by roof membrane manufacturer.

2.05 METAL ACCESSORIES

A. Metal Roof Edging and Fascia: Continuous metal edge member serving as termination of roof membrane and retainer for metal fascia; watertight with no exposed fasteners; mounted to roof edge nailer.
   1. Wind Performance:
      a. Membrane Pull-Off Resistance: 100 lbs/ft (1460 N/m), minimum, when tested in accordance with ANSI/SPRI ES-1 Test Method RE-1, current edition.
      b. Fascia Pull-Off Resistance: At least the minimum required when tested in accordance with ANSI/SPRI ES-1 Test Method RE-2, current edition.
      c. Provide product listed in current Factory Mutual Research Corporation Approval Guide with at least FM 1-270 rating.
   3. Fascia Face Height: As Shown on Drawings
   4. Fascia Material: Terne Metal - Zinc-Tin Alloy-Coated Stainless Steel: ASTM A 240/A 240M, Type 304, dead-soft, fully annealed stainless-steel sheet, coated on both sides with a zinc-tin alloy (50 percent zinc, 50 percent tin); [0.016 inch] [0.019 inch] thick.
   5. Solder for Zinc-Tin Alloy-Coated Stainless Steel: ASTM B 32, 100 percent tin.
   6. Edge Member Height Above Nailer: 1-1/4 inches (31 mm).
   7. Length: 144 inches (3650 mm).
   8. Functional Characteristics: Fascia retainer supports while allowing for free thermal cycling of fascia.
   9. Aluminum Bar: Continuous 6063-T6 alloy aluminum extrusion with pre-punched slotted holes; miters welded; injection molded EPDM splices to allow thermal expansion.
   10. Anchor Bar Cleat: 20 gage, 0.036 inch (0.9 mm) G90 coated commercial type

galvanized steel with pre-punched holes.

11. Fasteners: Factory-provided corrosion resistant fasteners, with drivers; no exposed fasteners permitted.
12. Special Shaped Components: Provide factory-fabricated pieces necessary for complete installation, including miters, scuppers, and end caps; minimum 14 inch (355 mm) long legs on corner pieces.
13. Scuppers: Welded/ Soldered watertight.
14. Accessories: Provide matching extenders, and other special fabrications as shown on the drawings.

2.06 ACCESSORY MATERIALS

A. Wood Nailers: PS 20 dimension lumber, Structural Grade No. 2 or better Southern Pine, Douglas Fir; or PS 1, APA Exterior Grade plywood; pressure preservative treated.
   1. Width: 3-1/2 inches (90 mm), nominal minimum, or as wide as the nailing flange of the roof accessory to be attached to it.
   2. Thickness: Same as thickness of roof insulation.

PART 3 INSTALLATION

3.01 GENERAL

A. Install roofing, insulation, flashings, and accessories in accordance with roofing manufacturer's published instructions and recommendations for the specified roofing system. Where manufacturer provides no instructions or recommendations, follow good roofing practices and industry standards. Comply with federal, state, and local regulations.

B. Obtain all relevant instructions and maintain copies at project site for duration of installation period.

C. Do not start work until Pre-Installation Notice has been submitted to manufacturer as notification that this project requires a manufacturer's warranty.

D. Perform work using competent and properly equipped personnel.

E. Temporary closures, which ensure that moisture does not damage any completed section of the new roofing system, are the responsibility of the applicator. Completion of flashings, terminations, and temporary closures shall be completed as required to provide a watertight condition.

F. Install roofing membrane only when surfaces are clean, dry, smooth and free of snow or ice; do not apply roofing membrane during inclement weather or when ambient conditions will not allow proper application; consult manufacturer for recommended procedures during cold weather. Do not work with sealants and adhesives when material temperature is outside the range of 60 to 80 degrees F (15 to 25 degrees C).

G. Protect adjacent construction, property, vehicles, and persons from damage related to roofing work; repair or restore damage caused by roofing work.
   1. Protect from spills and overspray from bitumen, adhesives, sealants and coatings.
   2. Particularly protect metal, glass, plastic, and painted surfaces from bitumen, adhesives, and sealants within the range of wind-borne overspray.
   3. Protect finished areas of the roofing system from roofing related work traffic and traffic by other trades.

H. Until ready for use, keep materials in their original containers as labeled by the manufacturer.

I. Consult membrane manufacturer's instructions, container labels, and Material Safety Data Sheets (MSDS) for specific safety instructions. Keep all adhesives, sealants, primers and cleaning materials away from all sources of ignition.

3.02 EXAMINATION

A. Examine roof deck to determine that it is sufficiently rigid to support installers and their mechanical equipment and that deflection will not strain or rupture roof components or deform deck.

B. Verify that surfaces and site conditions are ready to receive work. Correct defects in the substrate before commencing with roofing work.

C. Examine roof substrate to verify that it is properly sloped to drains.

D. Verify that the specifications and drawing details are workable and not in conflict with the roofing manufacturer's recommendations and instructions; start of work constitutes acceptable of project conditions and requirements.

3.03 PREPARATION

A. Take appropriate measures to ensure that fumes from adhesive solvents are not drawn into the building through air intakes.

B. Prior to proceeding, prepare roof surface so that it is clean, dry, and smooth, and free of sharp edges, fins, roughened surfaces, loose or foreign materials, oil, grease and other materials that may damage the membrane.

C. Fill all surface voids in the immediate substrate that are greater than 1/4 inch (6 mm) wide with fill material acceptable insulation to membrane manufacturer.

D. Seal, grout, or tape deck joints, where needed, to prevent bitumen seepage into building.

3.04 INSULATION AND COVER BOARD INSTALLATION

A. Install insulation in configuration and with attachment method(s) specified in PART 2, under Roofing System.

B. Install only as much insulation as can be covered with the completed roofing system before the end of the day's work or before the onset of inclement weather.

C. Lay roof insulation in courses parallel to roof edges.

D. Neatly and tightly fit insulation to all penetrations, projections, and nailers, with gaps not greater than 1/4 inch (6 mm). Fill gaps greater than 1/4 inch (6 mm) with acceptable insulation. Do not leave the roofing membrane unsupported over a space greater than 1/4 inch (6 mm).

E. Mechanical Fastening: Using specified fasteners and insulation plates engage fasteners through insulation into deck to depth and in pattern required by Factory Mutual for FM Class specified in PART 2 and membrane manufacturer, whichever is more stringent.

3.05 SINGLE-PLY MEMBRANE INSTALLATION

A. Beginning at low point of roof, place membrane without stretching over substrate and

allow to relax at least 30 minutes before attachment or splicing; in colder weather allow for longer relax time.

B. Lay out the membrane pieces so that field and flashing splices are installed to shed water.

C. Install membrane without wrinkles and without gaps or fishmouths in seams; bond and test seams and laps in accordance with membrane manufacturer's instructions and details.

D. Install membrane mechanically attached to the substrate using fasteners and edge securement as specified and as required by membrane manufacturers.

E. Mechanical Attachment: Install fasteners in the seams, covered by membrane.
   1. Lay out fasteners in compliance with FM Class specified in PART 2, as recommended by membrane manufacturer, and as indicated, whichever is most stringent.
   2. Properly engage fasteners in the deck with head flush with the countersunk portion of seam plate.

F. Edge Securement: Secure membrane at all locations where membrane terminates or goes through an angle change greater than 2 in 12 inches (1:6) using mechanically fastened reinforced perimeter fastening strips, plates, or metal edging as indicated or as recommended by roofing manufacturer.
   1. Exceptions: Round pipe penetrations less than 18 inches (460 mm) in diameter and square penetrations less than 4 inches (200 mm) square.
   2. Metal edging is not merely decorative; ensure anchorage of membrane as intended by roofing manufacturer.

3.06 FLASHING AND ACCESSORIES INSTALLATION

A. Install flashings, including laps, splices, joints, bonding, adhesion, and attachment, as required by membrane manufacturer's recommendations and details.

B. Metal Accessories: Install metal edgings, gravel stops, and copings in locations indicated on the drawings, with horizontal leg of edge member over membrane and flashing over metal onto membrane.
   1. Follow roofing manufacturer's instructions.
   2. Remove protective plastic surface film immediately before installation.
   3. Install water block sealant under the membrane anchorage leg.
   4. Flash with manufacturer's recommended flashing sheet unless otherwise indicated.
   5. Where single application of flashing will not completely cover the metal flange, install additional piece of flashing to cover the metal edge.
   6. If the roof edge includes a gravel stop and sealant is not applied between the laps in the metal edging, install an additional piece of self-adhesive flashing membrane over the metal lap to the top of the gravel stop; apply seam edge treatment at the intersections of the two flashing sections.
   7. When the roof slope is greater than 1:12, apply seam edge treatment along the back edge of the flashing.

C. Scuppers: Set in sealant and secure to structure; flash as recommended by manufacturer.

D. Roofing Expansion Joints: Install as shown on drawings and as recommended by

roofing manufacturer.

E. Flashing at Walls, Curbs, and Other Vertical and Sloped Surfaces: Install weathertight flashing at all walls, curbs, parapets, curbs, skylights, and other vertical and sloped surfaces that the roofing membrane abuts to; extend flashing at least 8 inches (200 mm) high above membrane surface.
   1. Use the longest practical flashing pieces.
   2. Evaluate the substrate and overlay and adjust installation procedure in accordance with membrane manufacturer's recommendations.
   3. Complete the splice between flashing and the main roof sheet with specified splice adhesive before adhering flashing to the vertical surface.
   4. Provide termination directly to the vertical substrate as shown on roof drawings.

F. Flashing at Penetrations: Flash all penetrations passing through the membrane; make flashing seals directly to the penetration.
   1. Pipes, Round Supports, and Similar Items: Flash with specified pre-molded pipe flashings wherever practical; otherwise use specified self-curing elastomeric flashing.
   2. Pipe Clusters and Unusual Shaped Penetrations: Provide penetration pocket at least 2 inches (50 mm) deep, with at least 1 inch (25 mm) clearance from penetration, sloped to shed water.
   3. Structural Steel Tubing: If corner radii are greater than 1/4 inch (6 mm) and longest side of tube does not exceed 12 inches (305 mm), flash as for pipes; otherwise, provide a standard curb with flashing.
   4. Flexible and Moving Penetrations: Provide weathertight gooseneck set in sealant and secured to deck, flashed as recommended by manufacturer.

3.07 FIELD QUALITY CONTROL

A. Inspection by Manufacturer: Provide final inspection of the roofing system by a Technical Representative employed by roofing system manufacturer specifically to inspect installation for warranty purposes (i.e. not a sales person).

B. Perform all corrections necessary for issuance of warranty.

3.08 CLEANING

A. Clean all contaminants generated by roofing work from building and surrounding areas, including bitumen, adhesives, sealants, and coatings.

B. Repair or replace building components and finished surfaces damaged or defaced due to the work of this section; comply with recommendations of manufacturers of components and surfaces.

C. Remove leftover materials, trash, debris, equipment from project site and surrounding areas.

3.09 PROTECTION

A. Where construction traffic must continue over finished roof membrane, provide durable protection and replace or repair damaged roofing to original condition.

END OF SECTION

SECTION 07600

ROOF FLASHING AND SHEET METAL

PART 1 - GENERAL

1.01 SCOPE OF WORK:

A. Flashing and sheet metal required to prevent penetration of water through the exterior

1.02 RELATED SECTIONS

A. Drawing and general provisions of the Contract, including General Supplementary Conditions and Division 1 Specification Sections, Apply to this Section.

B. RELATED SECTIONS

1. Division 6 Section "Rough Carpentry" for wood blocking and nails.

1.03 REFERENCES

ASTM A-446 Specification for steel sheet

ASTM B-209 Specification for aluminum sheet

ASTM B-221 Specification for aluminum extruded shape

FS QQ-L-201 Specification for Lead Sheet

ASTM A792 Steel Sheet, Aluminum-Zinc Alloy-Coated, by the Hot-Dip Process

ASTM B32 Solder Metal

ASTM B209 Aluminum and Alloy Sheet and Plate

ASTM B486 Paste Solder

ASTM D226 Asphalt-Saturated Organic Felt Used in Roofing and Waterproofing

ASTM D486 Asphalt Roof Cement, Asbestos-free

FS O-F-506 Flux, Soldering, Paste and Liquid

WH Warnock Hersey International, Inc. Middleton, WI.

FMLoss Prevention Data Sheet

NRCA National Roofing Contractors Association - Roofing Manual

SMACNA Architectural Sheet Metal Manual

1.04 SUBMITTALS

A. Submit under provisions of Section 01300 - Submittals.

B. Product Data: Provide manufacturer's specification data sheets for each product in accordance with Section 01300.

C. Provide approval letters from metal manufacturer for use of their metal within this particular roofing system type.

D. Shop Drawings

1. For manufactured and shop fabricated gravel stops, fascia, scuppers, and all other sheet metal fabrications.

2. Shop drawings: Indicate material profile, jointing pattern, jointing details, fastening methods, flashing, termination's, and installation details.
3. Indicate type, gauge and finish of metal.

E. Certification

1. Submit roof manufacturer's certification that metal furnished is acceptable to roofing manufacturer as a component of roofing system and is eligible for roof manufacturer's system warranty.
2. Submit certification that metal and fastening system furnished is Tested and Approved by Texas Windstorm.

F. Manufacturer's Product Data

1. Metal material characteristics and installation recommendations.
2. Submit color chart prior to material ordering and/or fabrication so that equivalent colors to those specific can be approved.

1.05 QUALITY CONTROL

A. Reference Standards

1. Comply with details and recommendations of SMACNA Manual for workmanship, methods of joining, anchorage, provisions for expansion, etc.
2. Factory Mutual Loss Prevention Data Sheet 1-49 windstorm resistance 1-90.

B. Manufacturer's Warranty

1. Pre-finished metal material shall require a written 20-year non-prorated warranty covering fade, chalking and film integrity. The material shall not show a color change greater than 5 NBS color units per ASTM D-2244 or chalking excess of 8 units per ASTM D-659. If either occurs material shall be replaced per warranty, at no cost to the Owner.

C. Contractor's Warranty

1. The Contractor shall provide the Owner with a notarized written warranty assuring that all sheet metal work including caulking and fasteners to be watertight and secure for a period of two years from the date of final acceptance of the building. Warranty shall include all materials and workmanship required to repair any leaks that develop, and make good any damage to other work or equipment caused by such leaks or the repairs thereof.

1.06 QUALIFICATIONS

A. Fabricator and Installer: Company specializing in sheet metal flashing work with 5 years experience.

1.07 DELIVERY, STORAGE, AND HANDLING

A. Deliver materials in manufacturer's original, unopened containers or packages with labels intact and legible.

B. Stack performed and pre-finished material to prevent twisting, bending, or abrasion, and to provide ventilation. Slope metal sheets to ensure drainage.

C. Prevent contact with materials which may cause discoloration or staining.

PART 2 - PRODUCTS

2.01 APPROVED EQUIVALENT

A. Contractor must submit any product not specified a minimum ten days before the bid date to Architect in order for product to be considered for approval. The Owner will notify Contractor, in writing, of decision to accept or reject request.

2.02 MATERIALS

A. Where sheet metal is required and no material or gauge is indicated, furnish and install the highest quality and gauges commensurate with referenced standards. Metal system is to be comprised of minimum Galvalume steel coated on both sides with an epoxy primer and on the weathering surface with a polyvinylidene fluoride coated finish.

1. Counterflashings: Stainless Steel Sheet: Type 316, ASTM A167, 24 gage, (0.015"), annealed except dead soft where fully concealed by other work, 2D (dull) finish.
2. Pitch Pans, Bonnets, Curb Caps, and Pipe Hoods: Stainless Steel Sheet: Type 316, ASTM A167, 24 gage, (0.015"), annealed except dead soft where fully concealed by other work, 2D (dull) finish.
3. Cover Plates: Type 316, ASTM A167, 24 gage, (0.015"), annealed except dead soft where fully concealed by other work, 2D (dull) finish.
4. Gravel Guard: Type 316, ASTM A167, 22 gage, (0.015"), "), annealed except dead soft where fully concealed by other work, 2D (dull) finish. Continuous cleat shall be 22 gauge.
5. Cap Flashing (Coping): Stainless Steel Sheet: Type 316, ASTM A167, 22 gage, (0.015"), annealed except dead soft where fully concealed by other work, 2D (dull) finish. Continuous cleats shall be 22 gauge.
6. Lead Flashings: Sheet complying with FS QQ-L-201. Grade B; formed from commondesilvered pig lead complying with ASTM B-29. Weight 4.0 lbssq/ft unless otherwise specified.
7. Termination Bar: Material shall be .125” x 1” (minimum) aluminum conforming to ASTM B-221, mill finish.

2.03 RELATED MATERIALS

A. Metal Primer: Zinc chromate type.

B. Plastic Cement: ASTM D 4586

C. Sealant: Specified in Section 07900 or on drawings.

D. Lead: Meets Federal Specification QQ-L-201, Grade B, four pounds per square foot.

E. Solder: ANSI/ASTM B32; 95/05 type.

F. Flux: FS O-F-506.

G. G. Underlayment: waterproofing membrane or self adhering waterproofing membrane.

H. Slip Sheet: Rosin sized building paper.

I. Fasteners:

1. Corrosion resistant screw fastener as recommended by metal manufacturer. Finish
2. exposed fasteners same as flashing metal.

3. Fastening shall conform to Texas Windstorm or as stated on section details, whichever is more stringent.

PART 3 - EXECUTION

3.01 PROTECTION

A. Protect contact areas of dissimilar metals with heavy asphalt or other approved coating, specifically made to stop electrolytic action.

3.02 GENERAL

A. Install work watertight, without waves, warps, buckles, fastening stress, or distortion, allowing for expansion and contraction.

B. Fastening of metal to walls and wood blocking shall comply with SMACNA Architectural Sheet Metal Manual, Texas Windstorm wind uplift specifications and/or manufacturer's recommendations whichever is of the highest standard.

C. All accessories or other items essential to the completeness of sheet metal installation, whether specifically indicated or not, shall be provided and of the same material as item to which applied.

D. Metal fascia and copings shall be secured to wood nailers at the bottom edge with a continuous cleat. Cleats shall be at least one gauge heavier than the metal it secures.

3.03 INSPECTION

A. Verify roof openings, curbs, pipes, sleeves, ducts, or vents through roof are solidly set, cant strips and reglets are in place, and nailing strips located.

B. Verify membrane termination and base flashings are in place, sealed, and secure.

C. Beginning of installation means acceptance of existing conditions.

D. Field measure site conditions prior to fabricating work.

3.04 MANUFACTURED SHEET METAL SYSTEMS

A. Installing Contractor shall be responsible for determining if the sheet metal systems are in general conformance with roof manufacturer's recommendations.

B. Furnish and install manufactured sheet metal systems in strict accordance with manufacturer's printed instructions.

C. Provide all factory-fabricated accessories including, but not limited to, fascia extenders, miters, scuppers, joint covers, etc.

3.05 SHOP FABRICATED SHEET METAL

A. Installing Contractor shall be responsible for determining if the sheet metal systems are in general conformance with roof manufacturer's recommendations.

B. Metal work shall be shop fabricated to configurations and forms in accordance with recognized sheet metal practices.

C. Hem exposed edges.

D. Angle bottom edges of exposed vertical surfaces to form drip.

E. All corners for sheet metal shall be lapped with adjoining pieces fastened and set in sealant.

F. Joints for gravel stop fascia system, cap flashing, and surface-mount counterflashing shall be formed with a 1/4” opening between sections. The opening shall be covered by a cover plate or backed by an internal drainage plate formed to the profile of fascia piece. The cover plate shall be embedded in mastic, fastened through the opening between the sections and loose locked to the drip edges.

G. Install sheet metal to comply with Architectural Sheet Metal manual, Sheet Metal and Air Conditioning Contractor's National Associations, Inc.

3.06 FLASHING MEMBRANE INSTALLATION

A. SCUPPER

1. Install scupper box in a 1/4" bed of mastic. Assure all box seams are soldered and have a minimum 4" flange. Make sure all corners are closed and soldered.
2. Prime metal edge at a rate of 100 square feet per gallon and allow to dry.

B. PLUMBING STACK

1. Prime flange and sleeve at a rate of 100 square feet per gallon and allow to dry.
2. Install properly sized sleeves in a 1/4" bed of elastomeric sealant.
3. Turn sleeve a minimum of 1" down inside of stack.
4. Caulk intersection of the membrane and flange with elastomeric sealant.

END OF SECTION

SECTION 07650

FLEXIBLE FLASHING

PART 1 — GENERAL

1.01 RELATED DOCUMENTS

A. Drawings and general provisions of the Contract, including General and Supplementary Conditions and Division 1 Specification Sections, apply to this Section.

B. Section 042000 – Unit Masonry.

1.02 SUMMARY

A. Section provides for a flexible rubberized asphalt, self-sealing through-wall flashing and wall flashing accessories.

1.03 REFERENCES

A. American Society for Testing and Materials

1. ASTM E96 – Test Methods for Water Vapor Transmission of Materials
2. ASTM D570 – Test Method for Water Absorption of Plastics
3. ASTM E154 – Test Method for Water Vapor Retarders used in contact with Earth Under Concrete Slabs, on Walls or as Ground Cover
4. ASTM D1004 – Test Method for Initial Tear Resistance of Plastic Film and Sheeting
5. ASTM D1938 – Test Method for Tear Propagation Resistance of Plastic Film and Thin Sheeting by a Single-Tear Method
6. ASTM D1876 – Test Method for Peel Resistance of Adhesives
7. ASTM D1970 – Standard Specifications for Self-Adhering Polymer Modified Bituminous Sheet Materials Used as Steep Roofing Underlayment for Ice Dam Protection
8. D412 – Test Methods for Vulcanized Rubber & Thermoplastic Rubbers and Thermoplastic Elastomers – Tension

1.04 SUBMITTALS

A. Product Data and Shop Drawings: Submit for each product; Spec-Data®/Data Sheets, details and installation procedures.

B. Test Reports: Indicating compliance with the performance requirements of this section.

C. Samples of flashing.

1.05 DELIVERY, STORAGE, AND HANDLING

A. Comply with manufacturer's recommendations for storage and handling of each product.

1.06 WARRANTY

A. Standard Product Warranty:

1. Submit manufacturer's warranty that flashing and accessories are free of defects at time of delivery, and are manufactured to meet manufacturer's published physical properties and material specifications.

2. Warranty Period: Five years from date of completion of the flashing installation.
3. Installer to warrant that flashing and accessories have been installed in accordance with manufacturer's recommendations.

PART 2 — PRODUCTS

2.01 MATERIALS

A. Flashing Description: 0.8 mm (32 mils) of self-adhesive rubberized asphalt integrally bonded to 0.2 mm (8 mils) of cross-laminated, high-density polyethylene film to provide a min. 1.0 mm (40 mil) thick membrane. Membrane shall be interleaved with disposable silicone-coated release paper until installed.

B. Performance Requirements:

1. Water Vapor Transmission: ASTM E96, Method B – 2.9 ng/m2sPa (0.05 perms) maximum
2. Water Absorption: ASTM D570 – Max. 0.1% by weight
3. Puncture Resistance: ASTM E154 – 356 N (80 lbs)
4. Tear Resistance:
   a) Initiation – ASTM D1004 – min. 58 N (13.0 lbs) M.D.
   b) Propagation – ASTM D1938 – min. 40 N (9.0 lbs) M.D.
5. Lap Adhesion at -4ºC (25ºF): ASTM D1876 – 880 N/M (5.0 lbs/in.) of width
6. Low Temperature Flexibility – ASTM D1970 – Unaffected to -43ºC (-45ºF)
7. Tensile Strength: ASTM D412, Die C Modified – Min. 5.5 MPa (800 psi)
8. Elongation, Ultimate Failure of Rubberized Asphalt: ASTM D412, Die C – Min. 200%

C. Wall Flashing Accessories:

4. Primer:
   a) Description: Water-based primer which imparts an aggressive, high tack finish on the treated substrate.
      (1.) Flash Point: No flash to boiling point
      (2.) Solvent Type: Water
      (3.) (VOC Content: Not to exceed 10 g/L
      (4.) Application Temperature: -4ºC (25ºF) and above
      (5.) Freezing point (as packaged): -7ºC (21ºF)
5. Termination Mastic:
   a) Description: Rubberized asphalt-based mastic with 200 g/L max. VOC Content.
6. Optional Primer:
   a) Description: Rubber-based primer in solvent.440 g/L max. VOC content.

PART 3 — EXECUTION

3.01 EXAMINATION

A. Examine conditions, with installer present, for compliance with requirements for installation, tolerances and other specific conditions affecting performance of flashing. Remove all deleterious materials from surfaces to be flashed.

3.02 INSTALLATION

A. General: Install flashing to dry surfaces at air and surface temperatures of -4ºC (25ºF) and above in accordance with manufacturer's recommendations at locations indicated on Construction Documents.

B. Flexible Wall Flashing:

1. Precut pieces of flashing to easily handled lengths for each location.
2. Remove silicone-coated release paper and position flashing carefully before placing it against the surface.
3. When properly positioned, place against surface by pressing firmly into place by hand roller. Fully adhere flashing to substrate to prevent water from migrating under flashing.
4. Overlap adjacent pieces 50 mm (2 in.) and roll all seams with a steel hand roller.
5. Trim bottom edge 13 mm (1⁄2 in.) back from exposed face of the wall. Flashing shall not be permanently exposed to sunlight.
6. At heads, sills and all flashing terminations turn up ends a minimum of 50 mm (2 in.) and make careful folds to form an end dam, with the seams sealed.
7. Do not allow the rubberized asphalt surface of the flashing membrane to come in contact with polysulfide sealants, creosote, uncured coal tar products or EPDM.
8. Do not expose flashing membrane to sunlight for more than thirty days prior to enclosure.

C. Accessories:

1. When required by dirty or dusty site conditions or by surfaces having irregular or rough texture, apply Primer by air spray, brush or roller at the rate recommended by manufacturer, prior to flashing installation. Allow the primer to dry completely before flashing application.
2. Apply a bead or trowel coat of mastic along flashing top edge, seams, cuts, and penetrations.
3. Apply primer by brush or heavy nap, natural-material roller at rate recommended by manufacturer prior to flashing installation. Allow primer to dry completely before flashing application.

END OF SECTION

SECTION 07840

FIRESTOPPING

PART 1- GENERAL

1.01 SECTION INCLUDES

A. Firestopping for through-penetrations and construction gaps, including the following:

1. Openings in fire rated walls, floors, and roofs, both empty and those containing penetrations such as cables, conduits, cable trays, pipes, ducts, and similar penetrating items.

2. Gaps between the tops of fire rated walls and underside of fire rated floor or roof assemblies.

B. See Definitions.

1.02 REFERENCES

C. ASTM E 84 - Standard Test Method for Surface Burning Characteristics of Building Materials; 2001.

D. ASTM E 119 - Standard Test Methods for Fire Tests of Building Construction and Materials; 2000a.

E. ASTM E 814 - Standard Test Method for Fire Tests of Through-Penetration Fire Stops; 2002.

F. ASTM E 1399 - Standard Test Method for Cyclic Movement and Measuring the Minimum and Maximum Joint Widths of Architectural Joint Systems; 1997 (Reapproved 2000).

G. ASTM E 1529 - Standard Test Methods for Determining Effects of Large Hydrocarbon Pool Fires on Structural Members and Assemblies; 2000.

H. ASTM E 1725 - Standard Test Methods for Fire Tests of Fire-Resistive Barrier Systems for Electrical System Components; 1995 (Reapproved 2001).

I. UL 1479 - Standard for Fire Tests of Through-Penetration Firestops; 1994.

J. UL 1709 - Rapid Rise Fire Tests of Protection Materials for Structural Steel; 1994.

K. UL 2079 - Tests for Fire Resistance of Building Joint Systems; 1998.

1.03 DEFINITIONS

A. Construction Gap: An open joint between adjacent rated assemblies; may be a moving joint or static opening, without penetrating items.

B. Firestop System: Specific firestop material or materials, which when installed in openings in a specific rated assembly, achieve the performance required.

C. Firestopping: Result of installation of firestop system.

D. Listing: The current, published listing of a system in a qualified listing agency's directory.

E. Listing Agency: Independent testing agency that has conducted tests and classified firestop systems for particular applications, which conducts routine in-plant follow-up inspections, and which lists tested systems in a published directory.

F. Penetrating Item: Any item (pipe, duct, conduit, cable, etc.) that passes completely through a rated assembly through an opening of any size.

G. Rated Assembly: A wall, floor, roof/ceiling, or other construction which is required to have an hourly fire rating or a smoke resistance rating.

H. Through Penetration: A hole through a rated assembly made to accommodate the passage of a penetrating item or an empty hole made for another purpose and not repairable using the original materials of construction.

1.04 SUBMITTALS

A. See Section 01300 - Administrative Requirements, for submittal procedures.

B. Shop Drawings: For each different firestopping configuration, provide the following:

1. Listing agency's detailed drawing showing opening, penetrating items, and firestopping materials, identified with listing agency's name and number or designation, fire rating achieved, and date of listing.

2. Identify which rated assembly each system is to be used in.

3. Any installation instructions that are not included on the detailed drawing.

4. For proposed systems that do not conform strictly to the listing, submit listing agency's drawing marked to show modifications and stamped approved by firestop system manufacturer's fire protection engineer.

5. Submit listing agency's test report showing compliance with requirements, based on testing of current products.

C. Product Certificates: Submit certificates signed by firestop system manufacturer certifying that materials furnished comply with requirements.

D. Product Data: Manufacturer's data sheets on each material to be used in firestop system systems, including:

1. Product characteristics and Material Safety Data Sheets.

2. Listing numbers of systems in which each product is to be used.

3. Preparation instructions and recommendations.

4. Storage and handling requirements and recommendations.

5. Installation methods.

E. Installer's Qualification Documentation.

1.05 QUALITY ASSURANCE

A. Installer Qualifications: Firm who is qualified by having experience, staff, and training to install the specified products, and who:

1. Is acceptable to or licensed by manufacturer.

1.06 DELIVERY, STORAGE, AND HANDLING

A. Deliver and store products until ready for installation in manufacturer's original unopened packaging, legibly marked with manufacturer's name and product identification, date of manufacture, lot number, shelf life, listing agency's classification marking, curing time, and mixing instructions if applicable.

B. Store and handle in such a manner as to prevent deterioration or damage due to moisture, temperature changes, contaminants, and other causes; follow manufacturer's instructions.

C. Store and dispose of solvent-based materials, and materials used with solvent-based materials, in accordance with requirements of local authorities having jurisdiction.

1.07 PROJECT CONDITIONS

A. Coordinate construction and cutting of openings so that each particular firestop system may be installed in accordance with its listing, including sizing, sleeves, and penetrating items.

B. Maintain environmental conditions (temperature, humidity, and ventilation) within limits recommended by manufacturer for optimum results. Do not install firestopping under environmental conditions outside manufacturer's absolute limits.

C. Provide ventilation as required by firestopping manufacturer, including mechanical ventilation if required.

PART 2 - PRODUCTS

2.01 MANUFACTURERS

A. Acceptable Manufacturer: One that meets performance criteria.

B. Single Source: All instances of a specific firestop system shall be made using products of the same manufacturer; where multiple installers (e.g. different subcontractors) are responsible for installation of firestopping, all installers shall use the same system made by the same manufacturer.

C. Substitutions: See Section 01600 - Product Requirements.

1. Where a proposed system is not listed by one of the listing agencies specified as acceptable, submit evidence prepared by a qualified independent testing agency that the system complies with the requirements.

2.02 MATERIALS

A. Firestopping - General: Provide installed firestopping that limits the spread of fire, heat, smoke, and gasses through otherwise unprotected openings.

1. Listing Agency: Provide systems that are listed by at least one of the following:

a. Underwriters Laboratories Inc. (UL), in "Fire Resistance Directory" category XHEZ or XHBN as appropriate.

b. ITS, in "Directory of Listed Products."

c. Omega Point Laboratories (OPL), in "Directory of Listed Products, Through Penetration Fire Resistance Directory."

d. Any other qualified independent testing and inspection agency that conducts periodic follow-up inspections and is acceptable to authorities having jurisdiction.

2. Furnish products identical to those tested for classification by listing agency.

3. Mark product packing with classification marking of listing agency.

4. Unlisted Systems: Where firestop systems not listed by any listing agency are required due to project conditions, submit a substitution proposal with evidence specified.

5. Firestopping Exposed To View: Provide products with flame spread index of less than 25 and smoke developed index of less than 450, when tested in accordance with ASTM E 84.

6. Firestopping Exposed to View, Traffic, Moisture, or Physical Damage: Provide products that after curing do not deteriorate when exposed to those conditions during and after construction.
7. Materials: Use only products specifically listed for use in listed systems.
8. Compatibility: Provide products that are compatible with each other, with the substrates forming openings, and with the items, if any, penetrating the firestopping, under the conditions represented by this project, based on testing and field performance demonstrated by manufacturer.

B. Through Penetration Firestop Systems (All Types Except Electrical Penetrations): Provide firestop systems listed for the specific combination of fire rated construction, type of penetrating item, annular space requirements, and fire rating, and:

1. F-Rating: Provide firestopping that has F-rating equal to or greater than the fire-resistance rating of the assembly in which the firestopping will be installed.
2. T-Rating: In habitable rooms and areas, where penetrating items are exposed to potential contact with materials on fire side(s) of rated assembly, provide firestopping that has a T-rating equal to its F-rating.
3. Wall Penetrations: Provide systems that are symmetrical, with the same rating from both sides of the wall.
4. Testing: Determine ratings in accordance with ASTM E 814 or UL 1479.
5. Provide asbestos-free products.

C. Through Penetration Firestop System For Electrical Penetrations: Provide firestopping complying with UL system No.5, R11044, tested in accordance with UL 1709, ASTM E 119, ASTM E 1529, and ASTM E 1725.

1. Acceptable Products:
   a. Fire Resistive Mats: 3M Interam(tm) Endothermic Mats, foil encapsulated, with manufacturer identification.
   b. Smoke and Flame Sealant: 3M FireDam(tm) 150+ Caulk, 3M Fire Barrier CP 25WB+ Caulk, or 3M Fire Barrier IC 15WB Caulk.
   c. Tape for Vapor Barrier, Heat Reflector, and Installation Aid: 3M Interam(tm) T-49 aluminum foil tape.
   d. Tape for Installation: Scotch 898 Filament Tape.
   e. Sheet to Cover Openings and as Collar: 3M Fire Barrier CS-195+ Composite Sheet.
   f. Cast In Place Devices: 3M Fire Barrier Cast In Place Devices.

D. Firestopping For Construction Gaps: Provide firestopping systems listed for the specific combination of fire-rated construction type, configuration, gap dimensions, and fire rating:

1. Provide firestopping that has fire resistance rating equal to or greater than the fireresistance rating of the assembly in which it is to be installed.
2. Provide firestopping that has movement capability appropriate to the potential movement of the gap, demonstrated by testing in accordance with ASTM E 1399 for minimum of 500 cycles at 10 cycles per minute.

3. Determine ratings in accordance with UL 2079.

E. Accessories: Provide all accessory materials required for complete installation; use materials specifically identified in system listings.

F. Identification Labels for Through Penetration Systems: Pressure sensitive self-adhesive vinyl labels, preprinted with the following information:

1. The words "Warning - Through Penetration Firestop System - Do not Disturb. Notify Building Management of Any Damage."
2. Listing agency's system number or designation.
3. System manufacturer's name, address, and phone number.
4. Installer's name, address, and phone number.
5. General contractor's name, address, and phone number (if applicable).
6. Date of installation.

PART 3 - EXECUTION

3.01 EXAMINATION

A. Do not begin installation until substrates have been properly prepared.

B. Conduct tests according to manufacturer's written recommendations to verify that substrates are free of oil, grease, rolling compounds, incompatible primers, loose mill scale, dirt and other foreign substances capable of impairing bond of firestopping.

C. Verify that items penetrating fire rated assemblies are securely attached, including sleeves, supports, hangers, and clips.

D. Verify that openings and adjacent areas are not obstructed by construction that would interfere with installation of firestopping, including ducts, piping, equipment, and other suspended construction.

E. Verify that environmental conditions are safe and suitable for installation of firestopping.

F. If substrate preparation is the responsibility of another installer, notify Architect of unsatisfactory preparation before proceeding.

3.02 PREPARATION

A. Prepare substrates in accordance with manufacturer's instructions and recommendations.

B. Install masking and temporary coverings as required to prevent contamination or defacement of adjacent surfaces due to firestopping installation.

3.03 INSTALLATION

A. Install in strict accordance with manufacturer's detailed installation instructions and procedures.

B. Install so that openings are completely filled and material is securely adhered.

C. Where firestopping surface will be exposed to view, finish to a smooth, uniform surface flush with adjacent surfaces.

D. After installation is complete, remove combustible forming materials and accessories that are not part of the listed system.

E. Repair or replace defective installations to comply with requirements.

F. At each through penetration, attach identification labels on both sides in location where label will be visible to anyone seeking to remove penetrating items or firestopping.

G. Clean firestop materials off surfaces adjacent to openings as work progresses, using methods and cleaning materials approved in writing by firestop system manufacturer and which will not damage the surfaces being cleaned.

H. Notify authority having jurisdiction when firestopping installation is ready for inspection; obtain advance approval of anticipated inspection dates and phasing, if any, required to allow subsequent construction to proceed.

I. Do not cover firestopping with other construction until approval of authority having jurisdiction has been received.

3.04 PROTECTION

A. Protect installed systems and products until completion of project; where subject to traffic, provide adequate protection board.

B. Touch up, repair or replace damaged systems and products before Substantial Completion.

END OF SECTION

SECTION 07900

JOINT SEALERS

PART 1 – GENERAL

1.01 SECTION INCLUDES

A. Sealants and joint backing.

B. Precompressed foam sealers.

1.02 RELATED SECTIONS

1.03 REFERENCES

A. ASTM C 834 - Standard Specification for Latex Sealants; 2000.

B. ASTM C 919 - Standard Practice for Use of Sealants in Acoustical Applications; 2002.

C. ASTM C 920 - Standard Specification for Elastomeric Joint Sealants; 2002.

D. ASTM C 1193 - Standard Guide for Use of Joint Sealants; 2000.

E. ASTM D 1667 - Standard Specification for Flexible Cellular Materials--Vinyl Chloride Polymers and Copolymers (Closed-Cell Foam); 1997.

1.04 SUBMITTALS

A. See Section 01300 - Administrative Requirements, for submittal procedures.

B. Product Data: Provide data indicating sealant chemical characteristics, performance criteria, substrate preparation, limitations, and color availability.

1.05 QUALITY ASSURANCE

A. Maintain one copy of each referenced document covering installation requirements on site.

B. Applicator Qualifications: Company specializing in performing the work of this section approved by manufacturer.

1.06 ENVIRONMENTAL REQUIREMENTS

A. Maintain temperature and humidity recommended by the sealant manufacturer during and after installation.

1.07 COORDINATION

A. Coordinate the work with all sections referencing this section.

1.08 WARRANTY

A. Correct defective work within a five year period after Date of Substantial Completion.

B. Warranty: Include coverage for installed sealants and accessories which fail to achieve airtight seal, exhibit loss of adhesion or cohesion, or do not cure.

PART 2 – PRODUCTS

2.01 MANUFACTURERS

A. Polyurethane Sealants:

1. Pecora Corporation: www.pecora.com.

2. Degussa Building Systems/Sonneborn: www.chemrex.com.
3. Substitutions: See Section 01600 - Product Requirements.

B. Preformed Compressible Foam Sealers:

4. Substitutions: See Section 01600 - Product Requirements.

2.02 SEALANTS

A. General Purpose Exterior Sealant: Polyurethane; ASTM C 920, Grade NS, Class 25, Uses M, G, and A; single component.
   1. Color: Standard colors matching finished surfaces.
   2. Applications: Use for:
      a) Control, expansion, and soft joints in masonry.
      b) Joints between concrete and other materials.
      c) Joints between metal frames and other materials.
      d) Other exterior joints for which no other sealant is indicated.

B. General Purpose Interior Sealant: Acrylic emulsion latex; ASTM C 834, Type OP, Grade NF single component, paintable.
   1. Color: Standard colors matching finished surfaces.
   2. Applications: Use for:
      a) Interior wall and ceiling control joints.
      b) Joints between door and window frames and wall surfaces.
      c) Other interior joints for which no other type of sealant is indicated.

C. Bathtub/Tile Sealant: White silicone; ASTM C 920, Uses I, M and A; single component, mildew resistant.
   1. Applications: Use for:
      a) Joints between plumbing fixtures and floor and wall surfaces.
      b) Joints between kitchen and bath countertops and wall surfaces.

D. Acoustical Sealant: Butyl or acrylic sealant; ASTM C 920, Grade NS, Class 12-1/2, Uses M and A; single component, solvent release curing, non-skinning.
   1. Applications: Use for concealed locations only:
      a) Sealant bead between top stud runner and structure and between bottom stud track and floor.
      b) At all partitions scheduled to receive sound attenuation insulation.

E. Concrete Paving Joint Sealant: Polyurethane, self-leveling; ASTM C 920, Class 25, Uses T, I, M and A; single component.
   1. Color: Color as selected.
   2. Applications: Use for:
      a) Joints in sidewalks adjacent to building.

2.03 ACCESSORIES

A. Primer: Non-staining type, recommended by sealant manufacturer to suit application.

B. Joint Cleaner: Non-corrosive and non-staining type, recommended by sealant manufacturer; compatible with joint forming materials.

C. Joint Backing: Round foam rod compatible with sealant; ASTM D 1667, closed cell PVC; oversized 30 to 50 percent larger than joint width.

D. Bond Breaker: Pressure sensitive tape recommended by sealant manufacturer to suit application.

PART 3 – EXECUTION

3.01 EXAMINATION

A. Verify that substrate surfaces are ready to receive work.

B. Verify that joint backing and release tapes are compatible with sealant.

3.02 PREPARATION

A. Remove loose materials and foreign matter which might impair adhesion of sealant.

B. Clean and prime joints in accordance with manufacturer's instructions.

C. Perform preparation in accordance with manufacturer's instructions and ASTM C 1193.

D. Protect elements surrounding the work of this section from damage or disfigurement.

3.03 INSTALLATION

A. Perform work in accordance with sealant manufacturer's requirements for preparation of surfaces and material installation instructions.

B. Perform installation in accordance with ASTM C 1193.

C. Perform acoustical sealant application work in accordance with ASTM C 919.

D. Measure joint dimensions and size joint backers to achieve width-to-depth ratio, neck dimension, and surface bond area as recommended by manufacturer, except where specific dimensions are indicated.

E. Install bond breaker where joint backing is not used.

F. Install sealant free of air pockets, foreign embedded matter, ridges, and sags.

G. Apply sealant within recommended application temperature ranges. Consult manufacturer when sealant cannot be applied within these temperature ranges.

H. Tool joints concave.

3.04 CLEANING

A. Clean adjacent soiled surfaces.

3.05 PROTECTION OF FINISHED WORK

A. Protect sealants until cured.

END OF SECTION

SECTION 08120

INTERIOR ALUMINUM FRAMES

PART 1 GENERAL

1.1 RELATED SECTIONS

A. Section 01330 - Submittal Procedures.

B. Section 017421 – Construction/Demolition Waste Management and Disposal.

C. Section 01780 - Closeout Submittals.

D. Section 079200 - Joints Sealants.

E. Section 08 710 - Door Hardware.

1.2 REFERENCES

A. American Architectural Manufacturers Association (AAMA)

1. AAMA 609/610, Cleaning and Maintenance Guide for Architecturally Finished Aluminum.

B. American Society for Testing and Materials International, (ASTM).

1. ASTM E330, Standard Test Method for Structural Performance of Exterior Windows, Doors, Skylights and Curtain Walls by Uniform Static Air Pressure Difference.

C. Canadian Standards Association (CSA).

1. CAN/CSA-G40.20/G40.21, General Requirements for Rolled or Welded Structural Quality Steel/Structural Quality Steel.
2. CAN/CSA G164, Hot Dip Galvanizing of Irregularly Shaped Articles.

1.3 SYSTEM DESCRIPTION

A. Aluminum Interior Door Frames.

1.4 SUBMITTALS

A. Submit under provisions of Section 01300.

B. Product Data: Submit for frames.

1. Include information for factory finish, glazing gaskets, accessories and other required components.
2. Include color charts for finish indicating manufacturer's standard colors available for selection.
3. Shop Drawings: Submit schedule indicating opening identification number, frame types, dimensions, swing, label, and hardware

requirements. Use same reference numbers for openings as Contract Drawings.

4. Include elevations and details indicating frame types, profiles, conditions at openings, methods and locations of anchoring, glazing requirements, hardware locations, and reinforcements for hardware, details of connections to special construction and other custom features.
5. Samples: Submit following:
   a. Samples indicating quality of finish in selected colors on alloys used for Work.
   b. Where normal color and texture variations are expected, include additional samples to show range of such variation.
   c. Informational Submittals: Submit manufacturer's instructions.

1.5 CLOSEOUT SUBMITTALS

A. Provide maintenance data for cleaning and maintenance of aluminum finishes for incorporation into manual specified in Section 01780 - Closeout Submittals.

1.6 WARRANTY

A. Provide a written warranty for work of this section from manufacturer for failure due to defective materials and from contractor for failure due to defective workmanship for two (2) years respectively from the date of Substantial Completion.

1.7 DELIVERY, STORAGE AND HANDLING

A. Apply temporary protective coating to finished surfaces. Remove coating after erection. Do not use coatings that will become hard to remove or leave residue.

B. Leave protective covering in place until final cleaning of building.

PART 2 PRODUCTS

2.1 ACCEPTABLE MANUFACTURERS

A. Basis of Design: Interior OfficeFronts by RACO Interior Products, Inc.

1. Interior Door Frames: RACO Classic Freestanding adjustable throat frames to accommodate wall thicknesses indicated on Drawings; height of system as indicated on Drawings.

B. Approved Equal.

2.2 ALUMINUM FINISHES

A. Finish exposed surfaces of aluminum components in accordance with Aluminum Association Designation System for Aluminum Finishes.

1. Clear anodic finish.

2.3 FABRICATION

A. Doors and framing to be by same manufacturer.

B. Fabricate doors and frames to profiles and maximum face sizes as shown.

C. Provide structural steel reinforcement as required.

D. Fit joints tightly and secure mechanically.

E. Conceal fastenings.

F. Mortise, reinforce, drill and tap doors, frames and reinforcements to receive hardware using templates provided under Section 08 71 00 - Door Hardware.

G. Isolate aluminum from direct contact with dissimilar metals, concrete and masonry.

PART 3 EXECUTION

3.1 MANUFACTURER’S INSTRUCTIONS

A. Compliance: comply with manufacturer’s written data, including product technical bulletins, product catalogue installation instructions, product carton installation instructions and data sheets.

3.2 INSTALLATION

A. Set frames plumb, square, level at correct elevation in alignment with adjacent work.

B. Anchor securely.

C. Install doors and hardware in accordance with hardware templates and manufacturer's instructions.

D. Adjust operable parts for correct function.

E. Make allowances for deflection of structure to ensure that structural loads are not transmitted to frames.

3.3 CAULKING

A. Seal joints to provide weathertight seal at outside and air, vapour seal at inside.

B. Apply sealant in accordance with Section 07920 - Joint Sealants. Conceal sealant within the aluminum work except where exposed use is permitted by Owner’s Representative.

3.4 CLEANING

A. Perform cleaning of aluminum components in accordance with AAMA 609.1 - Voluntary Guide Specification for Cleaning and Maintenance of Architectural Anodized Aluminum.

B. Perform cleaning as soon as possible after installation to remove construction and accumulated environmental dirt.

C. Clean aluminum with damp rag and approved non-abrasive cleaner.

D. Remove traces of primer, caulking, epoxy and filler materials; clean doors and frames.

E. Clean glass and glazing materials with approved non-abrasive cleaner.

F. Upon completion of installation, remove surplus materials, rubbish, tools and equipment barriers.

3.5 PROTECTION

A. Protect installed products and components from damage during construction.

B. Repair damage to adjacent materials caused by aluminum door and frame installation.

END OF SECTION

SECTION 08140

Wood Doors

PART 1 - GENERAL

1.01 SECTION INCLUDES

A. Flush laminate clad wood doors; flush configuration; non-rated wood doors.

1.02 RELATED SECTIONS

A. Section 08710 - Door Hardware.

1.03 REFERENCES

A. AWI/AWMAC (QSI) - Architectural Woodwork Quality Standards Illustrated; Architectural Woodwork Institute and Architectural Woodwork Manufacturers Association of Canada; 2006, 8th Ed., Version 2.0.

B. ICC (IBC) - International Building Code; 2009.

C. ITS (DIR) - Directory of Listed Products; Intertek Testing Services NA, Inc.; current edition.

D. NEMA LD 3 - High-Pressure Decorative Laminates; National Electrical Manufacturers Association; current edition

E. UL (BMD) - Building Materials Directory; Underwriters Laboratories Inc.; current edition.

1.04 SUBMITTALS

A. See Section 01300 - Administrative Requirements for submittal procedures.

B. Product Data: Indicate door core materials and construction; laminate, type and characteristics.

C. Shop Drawings: Illustrate door opening criteria, elevations, sizes, types, swings, undercuts required, special beveling, special blocking for hardware, factory machining criteria, factory finishing criteria, identify cutouts for glazing.

D. Manufacturer's Installation Instructions: Indicate special installation instructions.

1.05 QUALITY ASSURANCE

A. Manufacturer: Company specializing in manufacturing the products specified in this section with minimum three years of documented experience.

1.06 DELIVERY, STORAGE, AND PROTECTION

A. Package, deliver and store doors in accordance with specified quality standard.

B. Accept doors on site in manufacturer's packaging. Inspect for damage.

C. Protect doors with resilient packaging sealed with heat shrunk plastic. Do not store in damp or wet areas; or in areas where sunlight might bleach veneer. Seal top and bottom edges with tinted sealer if stored more than one week. Break seal on site to permit ventilation.

1.07 PROJECT CONDITIONS

A. Coordinate the work with door opening construction, door frame and door hardware installation.

1.08 WARRANTY

A. See Section 01780 - Closeout Submittals for additional warranty requirements.

B. Provide warranty for the following term:

1. Interior Doors: Life of installation.

A. Include coverage for delamination of veneer, warping beyond specified installation tolerances, defective materials, and telegraphing core construction.

PART 2 - PRODUCTS

2.01 MANUFACTURERS

A. High Pressure Decorative Laminate Faced Doors:

1. Ampco Products, Inc: www.ampco.com.
2. Poncraft Door Co: www.poncraft.com.
3. VT Industries, Inc: www.vtindustries.com.
4. Substitutions: See Section 01630 - Product Requirements.

2.02 DOORS AND PANELS

A. Interior Doors: 1-3/4 inches thick unless otherwise indicated; flush construction.

1. Provide solid core doors at all locations.
2. 5 ply High pressure decorative laminate finish.

2.03 DOOR AND PANEL CORES

A. Non-Rated Solid Core and 20 Minute Rated Doors: Type particleboard core (PC), plies and faces as indicated above.

2.04 DOOR FACINGS

A. High Pressure Decorative Laminate Facing for Non-Fire-Rated Doors: NEMA LD 3, HGS; color as selected; textured, low gloss finish.

B. Facing Adhesive: Type I - waterproof.

2.05 DOOR CONSTRUCTION

A. Fabricate doors in accordance with door quality standard specified.

B. Cores Constructed with Stiles and Rails:

C. Provide solid blocks at lock edge for hardware reinforcement.

1. Provide solid blocking for other throughbolted hardware.

D. Fit door edge trim to edge of stiles after applying veneer facing.

E. Vertical Exposed Edge of Stiles - Plastic Laminate Faces: One piece hardwood, for stain or paint finish (as required to match selected plastic laminate faces).

F. Fit door edge trim to edge of stiles after applying veneer facing.

G. Factory machine doors for hardware other than surface-mounted hardware, in accordance with hardware requirements and dimensions.

H. Factory fit doors for frame opening dimensions identified on shop drawings, with edge clearances in accordance with specified quality standard.

I. Provide edge clearances in accordance with AWI Quality Standards Illustrated Section 1700.

PART 3 - EXECUTION

3.01 EXAMINATION

A. Verify existing conditions before starting work.

B. Verify that opening sizes and tolerances are acceptable.

C. Do not install doors in frame openings that are not plumb or are out-of-tolerance for size or alignment.

3.02 INSTALLATION

A. Install doors in accordance with manufacturer's instructions and specified quality standard.

1. Install fire-rated doors in accordance with NFPA 80 requirements.

B. Factory-Finished Doors: Do not field cut or trim; if fit or clearance is not correct, replace door.

C. Trim door height by cutting bottom edges to a maximum of 3/4 inch (19 mm).

1. Trim fire door height at bottom edge only, in accordance with fire rating requirements.

D. Use machine tools to cut or drill for hardware.

E. Coordinate installation of doors with installation of frames and hardware.

3.03 INSTALLATION TOLERANCES

A. Conform to specified quality standard for fit and clearance tolerances.

B. Conform to specified quality standard for maximum diagonal distortion.

C. Maximum Diagonal Distortion (Warp): 1/8 inch measured with straight edge or taut string, corner to corner, over an imaginary 36 by 84 inches surface area.

D. Maximum Vertical Distortion (Bow): 1/8 inch measured with straight edge or taut string, top to bottom, over an imaginary 36 by 84 inches surface area.

E. Maximum Width Distortion (Cup): 1/8 inch measured with straight edge or taut string, edge to edge, over an imaginary 36 by 84 inches surface area.

3.04 ADJUSTING

A. Adjust doors for smooth and balanced door movement.

B. Adjust closers for full closure.

3.05 SCHEDULE - See Drawings

END OF SECTION

SECTION 08411
ALUMINUM-FRAMED ENTRANCES AND STOREFRONTS

PART 1 - GENERAL

1.1 Related Documents

A. Drawings and general provisions of the Contract, including General and Supplementary Conditions and Division 01 Specification Sections, apply to this Section.

1.2 Summary

A. This Section includes Kawneer Aluminum Entrances, glass and glazing, and door hardware and components.
   1. Types of Kawneer Aluminum Entrances include:
      a. 500 Swing Door; Wide stile, 5" (127 mm) vertical face dimension, 1-3/4" (44.5 mm) depth, high traffic applications.

B. Related Sections:
   1. 072700 “Air Barriers”
   2. 079200 “Joint Sealants”
   3. 083213 “Sliding Aluminum-Framed Glass Doors”
   4. 084313 "Aluminum-Framed Storefronts"
   5. 085113 “Aluminum Windows”
   6. 087000 "Hardware"
   7. 088000 “Glazing”

1.3 Definitions

A. Definitions: For fenestration industry standard terminology and definitions refer to American Architectural Manufactures Association (AAMA) – AAMA Glossary (AAMA AG).

1.4 Performance Requirements

A. General Performance: Aluminum-framed entrance system shall withstand the effects of the following performance requirements without failure due to defective manufacture, fabrication, installation, or other defects in construction.

B. Aluminum Framed Entrance Performance Requirements:
   1. Wind loads: Provide entrance system; include anchorage, capable of withstanding wind load design pressures of (100) lbs./sq. ft. inward and (100) lbs./sq. ft. outward. The design pressures are based on the International Building Code; 2009 Edition and Texas Department of Insurance.
   2. Air Infiltration: For single acting offset pivot or butt hung entrances in the closed and locked position, the test specimen shall be tested in accordance with ASTM E 283 at a pressure differential of 1.57 psf (75 PA) for single and pairs of doors. A single 3'0" x 7'0" (915 mm x 2134 mm) entrance door and frame shall not exceed 1.0 cfm/ft^2. A

pair of 6'0" x 7'0" (1830 mm x 2134 mm) entrance doors and frame shall not exceed 1.0 cfm/ft^2.

3. Structural Performance: Corner strength shall be tested per the Kawneer dual moment load test procedure and certified by an independent testing laboratory to ensure weld compliance and corner integrity [Testing procedure and certified test results available upon request].

1.5 Submittals

A. Product Data: Include construction details, material descriptions, and fabrication methods, dimensions of individual components and profiles, hardware, finishes, and installation instructions for each type of aluminum-framed entrance door indicated.

B. Shop Drawings: Include plans, elevations, sections, details, hardware, and attachments to other work, operational clearances and installation details.

C. Samples for Initial Selection: For units with factory-applied color finishes including samples of hardware and accessories involving color selection.

D. Samples for Verification: For aluminum-framed entrance door and components required.

E. Product Test Reports: Based on evaluation of comprehensive tests performed by a qualified testing agency for each type of aluminum-framed entrance doors.

F. Other Action Submittals:
   1. Entrance Door Hardware Schedule: Prepared by or under the supervision of supplier, detailing fabrication and assembly of entrance door hardware, as well as procedures and diagrams. Coordinate final entrance door hardware schedule with doors, frames, and related work to ensure proper size, thickness, hand, function, and finish of entrance door hardware.

1.6 Quality Assurance

A. Installer Qualifications: An installer which has had successful experience with installation of the same or similar units required for the project and other projects of similar size and scope.

B. Manufacturer Qualifications: A manufacturer capable of fabricating aluminum-framed entrance doors and storefronts that meet or exceed performance requirements indicated and of documenting this performance by inclusion of test reports, and calculations.

C. Source Limitations: Obtain aluminum-framed entrance door through one source from a single manufacturer.

D. Product Options: Drawings indicate size, profiles, and dimensional requirements of aluminum-framed entrance doors and are based on the specific system indicated. Refer to Division 01 Section “Product Requirements”. Do not modify size and dimensional requirements.

1. Do not modify intended aesthetic effects, as judged solely by Architect, except with Architect's approval. If modifications are proposed, submit comprehensive explanatory data to Architect for review.

E. Pre-installation Conference: Conduct conference at Project site to comply with requirements in Division 01 Section “Project Management and Coordination”.

1.7 Project Conditions

A. Field Measurements: Verify actual dimensions of aluminum-framed entrance door openings by field measurements before fabrication and indicate field measurements on Shop Drawings.

1.8 Warranty

A. Manufacturer’s Warranty: Submit, for Owner’s acceptance, manufacturer’s standard warranty.
   1. Warranty Period: Two (2) years from Date of Substantial Completion of the project provided however that the Limited Warranty shall begin in no event later than six months from date of shipment by manufacturer.

PART 2 - PRODUCTS

2.1 Manufacturers

A. Basis-of-Design Product:
   1. Kawneer Company Inc.
   2. The door stile and rail face dimensions of the 500 entrance door will be as follows

Door	Vertical Stile	Top Rail	Bottom Rail
500	5" (127 mm)	5" (127 mm)	10" (254 mm)

   3. Major portions of the door members to be 0.125" (3.2) nominal in thickness and glazing molding to be 0.05" (1.3) thick.
   4. Glazing gaskets shall be either EPDM elastomeric extrusions or a thermoplastic elastomer.
   5. Provide adjustable glass jacks to help center the glass in the door opening.

B. Substitutions: Refer to Substitutions Section for procedures and submission requirements
   1. Pre-Contract (Bidding Period) Substitutions: Submit written requests ten (10) days prior to bid date.
   2. Post-Contract (Construction Period) Substitutions: Submit written request in order to avoid aluminum-framed entrance door installation and construction delays.
   3. Product Literature and Drawings: Submit product literature and drawings modified to suit specific project requirements and job conditions.
   4. Certificates: Submit certificate(s) certifying substitute manufacturer (1) attesting to adherence to specification requirements for aluminum-framed entrance door system performance criteria, and (2) has been engaged in the design, manufacturer and

fabrication of aluminum-framed entrance doors for a period of not less than ten (10) years. (Company Name)

5. Test Reports: Submit test reports verifying compliance with each test requirement required by the project.
6. Samples: Provide samples of typical product sections and finish samples in manufacturer's standard sizes.

C. Substitution Acceptance: Acceptance will be in written form, either as an addendum or modification, and documented by a formal change order signed by the Owner and Contractor.

2.2 Materials

A. Aluminum Extrusions: Alloy and temper recommended by aluminum-framed entrance door manufacturer for strength, corrosion resistance, and application of required finish and not less than 0.090” (2.3 mm) wall thickness at any location for the main frame and door leaf members.

B. Fasteners: Aluminum, nonmagnetic stainless steel or other materials to be non-corrosive and compatible with aluminum-framed entrance door members, trim hardware, anchors, and other components.

C. Anchors, Clips, and Accessories: Aluminum, nonmagnetic stainless steel, or zinc-coated steel or iron complying with ASTM B 633 for SC3 severe service conditions or other suitable zinc coating; provide sufficient strength to withstand design pressure indicated.

D. Reinforcing Members: Aluminum, nonmagnetic stainless steel, or nickel/chrome-plated steel complying with ASTM B 456 for Type SC 3 severe service conditions, or zinc-coated steel or iron complying with ASTM B 633 for SC 3 severe service conditions or other suitable zinc coating; provide sufficient strength to withstand design pressure indicated.

1. Weather Seals: Provide weather stripping with integral barrier fin or fins of semi-rigid, polypropylene sheet or polypropylene-coated material. Comply with AAMA 701/702.

2.3 Storefront Framing System

A. Storefront Entrance Framing:

1. Trifab™ VG 450/451/451T or Trifab™ 451UT.

B. Non-Brackets and Reinforcements: Manufacturer's standard high-strength aluminum with nonstaining, nonferrous shims for aligning system components.

C. Fasteners and Accessories: Manufacturer's standard corrosion-resistant, nonstaining, nonbleeding fasteners and accessories compatible with adjacent materials. Where exposed shall be stainless steel.

D. Perimeter Anchors: When steel anchors are used, provide insulation between steel material and aluminum material to prevent galvanic action.

E. Packing, Shipping, Handling and Unloading: Deliver materials in manufacturer's original, unopened, undamaged containers with identification labels intact.

F. Storage and Protection: Store materials protected from exposure to harmful weather conditions. Handle storefront material and components to avoid damage. Protect storefront material against damage from elements, construction activities, and other hazards before, during and after storefront installation.

2.4 Glazing

A. Glazing: As specified in Division 08 Section “Glazing”.

B. Glazing Gaskets: Manufacturer's standard compression types; replaceable, extruded EPDM rubber.

C. Spacers and Setting Blocks: Manufacturer's standard elastomeric type.

2.5 Hardware

A. General: Provide manufacturer's standard hardware fabricated from aluminum, stainless steel, or other corrosion-resistant material compatible with aluminum; designed to smoothly operate, tightly close, and securely lock aluminum-framed entrance doors.

B. Standard Hardware:
   1. Weather-stripping:
      a. Meeting stiles on pairs of doors shall be equipped with an adjustable astragal utilizing wool pile with polymeric fin.
      b. The door weathering on a single acting offset pivot or butt hung door and frame (single or pairs) shall be comprised of a thermoplastic elastomer weathering on a tubular shape with a semi-rigid polymeric backing.
   2. Sill Sweep Strips: EPDM blade gasket sweep strip in an aluminum extrusion applied to the interior exposed surface of the bottom rail with concealed fasteners (Necessary to meet specified performance tests).
   3. Threshold: Extruded aluminum, one piece per door opening, with ribbed surface.
   4. Continuous Hinge: See Hardware Spec
   5. Push/Pull KAWNEER STANDARD “ARCHITECTS CLASSIC” HARDWARE style.
   6. Exit Device See Hardware Spec
   7. Closer: See Hardware Spec
   8. Latch Handle: See Hardware Spec
   9. Cylinder(s)/Thumbturn: See Hardware Spec

2.6 Fabrication

A. Fabricate aluminum-framed entrance doors in sizes indicated. Include a complete system for assembling components and anchoring doors.

B. Fabricate aluminum-framed glass doors that are reglazable without dismantling perimeter framing.
   1. Door corner construction shall consist of mechanical clip fastening, SIGMA deep penetration plug welds and 1-1/8" (29 mm) long fillet welds inside and outside of all

four corners. Glazing stops shall be hook-in type with EPDM glazing gaskets reinforced with non-stretchable cord.

2. Accurately fit and secure joints and corners. Make joints hairline in appearance.
3. Prepare components with internal reinforcement for door hardware.
4. Arrange fasteners and attachments to conceal from view.

C. Weather-stripping: Provide weather-stripping locked into extruded grooves in door panels or frames as indicated on manufacturer's drawings and details.

2.7 Aluminum Finishes

A. Finish designations prefixed by AA comply with the system established by the Aluminum Association for designating aluminum finishes.

B. Factory Finishing:
   1. Kawneer Permanodic™ AA-M10C21A41 / AA-M45C22A41, AAMA 611, Architectural Class I Clear Anodic Coating (Color #14 Clear).

PART 3 - EXECUTION

3.1 Examination

A. Examine openings, substrates, structural support, anchorage, and conditions, with Installer present, for compliance with requirements for installation tolerances and other conditions affecting performance of work. Verify rough opening dimensions, levelness of sill plate and operational clearances. Examine wall flashings, vapor retarders, water and weather barriers, and other built-in components to ensure a coordinated installation.
   1. Masonry Surfaces: Visibly dry and free of excess mortar, sand, and other construction debris.
   2. Wood Frame Walls: Dry, clean, sound, well nailed, free of voids, and without offsets at joints. Ensure that nail heads are driven flush with surfaces in opening and within 3 inches (76.2 mm) of opening.
   3. Metal Surfaces: Dry; clean; free of grease, oil, dirt, rust, corrosion, and welding slag; without sharp edges or offsets at joints.
   4. Proceed with installation only after unsatisfactory conditions have been corrected.

3.2 Installation

A. Comply with Drawings, Shop Drawings, and manufacturer's written instructions for installing aluminum-framed entrance doors, hardware, accessories, and other components.

B. Install aluminum-framed entrance doors level, plumb, square, true to line, without distortion or impeding thermal movement, anchored securely in place to structural support, and in proper relation to wall flashing and other adjacent construction.

C. Set sill threshold in bed of sealant, as indicated, for weather tight construction.

D. Separate aluminum and other corrodible surfaces from sources of corrosion or electrolytic action at points of contact with other materials.

3.3 Field Quality Control

A. Manufacturer's Field Services: Upon Owner's written request, provide periodic site visit by manufacturer's field service representative.

3.4 Adjusting, Cleaning, and Protection

A. Clean aluminum surfaces immediately after installing aluminum-framed entrance doors. Avoid damaging protective coatings and finishes. Remove excess sealants, glazing materials, dirt, and other substances.

B. Clean glass immediately after installation. Comply with glass manufacturer's written recommendations for final cleaning and maintenance. Remove nonpermanent labels, and clean surfaces.

C. Remove and replace glass that has been broken, chipped, cracked, abraded, or damaged during construction period.

DISCLAIMER STATEMENT

This guide specification is intended to be used by a qualified construction specifier. The guide specification is not intended to be verbatim as project specification without appropriate modifications for the specific use intended. The guide specification must be used and coordinated with the procedures of each design firm, and the particular requirements of a specific construction project.

END OF SECTION 084113

SECTION 08510

EXTERIOR ALUMINUM WINDOWS

PART 1 – GENERAL

All exterior aluminum windows shall be pre-approved by TDI, be impact resistant windows as per TDI requirements, and shall be good for the wind pressures shown on the structural drawings.

1.01 SECTION INCLUDES

A. Fixed window assemblies meeting or exceeding windstorm impact requirement.

1.02 RELATED SECTIONS

A. Section 07900 - Joint Sealers: Perimeter sealant and back-up materials.

B. Section 08800 - Glazing.

1.03 REFERENCES

A. AAMA/NWWDA 101/I.S.2 - Voluntary Specifications for Aluminum, Vinyl (PVC) and WoodWindows and Glass Doors; 1997.

B. AAMA 2603 - Voluntary Specification, Performance Requirements and Test Procedures forPigmented Organic Coatings on Aluminum Extrusions and Panels; 2002.

C. FBC TAS 201 - Impact Test Procedures; Florida Building Code; 1994.

D. FBC TAS 202 - Criteria for Testing Impact and Non Impact Resistant Building EnvelopeComponents Using Uniform Static Air Pressure; Florida Building Code; 1994.

E. FBC TAS 203 - Criteria for Testing Products Subject To Cyclic Wind Pressure Loading; Florida Building Code; 1994.

1.04 SUBMITTALS

A. See Section 01300 - Administrative Requirements, for submittal procedures.

B. Product Data: Manufacturer's data sheets on each product to be used, including:

1. Preparation instructions and recommendations.
2. Storage and handling requirements and recommendations.
3. Installation methods.

C. Certification: Evidence of certification to specified ratings. AA 900 ISOWEB® window thermally broken 2 5/8” deep frame outswing (C-HC90 – AW90)

D. Provide Engineered shop drawing Windstorm approved for Texas.

1.05 DELIVERY, STORAGE, AND HANDLING

A. Do not deliver units to project site until ready to install, unless indoor storage area is available.

B. Store products in manufacturer's unopened packaging until ready for installation.

1.06 WARRANTY

A. Provide manufacturer's standard one year warranty.

PART 2 - PRODUCTS

2.01 MANUFACTURERS

A. Acceptable Manufacturers:

1. Kawneer Company, Inc; Series #8589 - fixed www.kawneer.com
2. Efco; Tel: (800) 221-4169. www.efcocorp.com.
3. All Seasons Commercial, Inc.; 1293 Harvey Mitchell Pkwy., Bryan, TX 77803; Tel: (800) 444-1444. Fax: (979) 823-1005.
4. 4. YKK AP America, Inc.; 7680 The Bluffs, Suite 100, Austell, GA 30168. Tel: (678) 838-6000. Fax: (678) 838-6001.

B. Substitutions: See Section 01630 - Product Requirements.

2.02 MATERIALS

A. Windows: Complying with AAMA/NWWDA 101/I.S.2; factory assembled and glazed,complete with operating hardware. Kawneer Company, Inc: www.kawneer.com "Series 500"or equal as approved

1. Frame Components: Aluminum alloy 6303-T5; 2½"x5" Windstorm
2. Corners: Aluminum corner keys; fastened by sheet metal screws and sealed with small joint sealant colored to match frame, unless otherwise indicated.
3. Anchors: Concealed screw or bolts as required to achieve anchorage strength equivalent to impact resistance.
4. Panning: Aluminum extrusions or sheet, to match framing members.
5. Fasteners: At least equivalent to tested configuration.
6. Rough Bucks: Pressure preservative treated; sizes as required.
7. Sealant: Clear silicone sealant.
8. Finish: Clear anodized aluminum.

2.03 SMALL AND LARGE MISSILE-RATED WINDOWS (ref. Section 08800 Glazing)

A. Fixed Windows: All Seasons Series 2000; rated for small and large missile impact; overall window size up to 37 inches by 76 inches.

1. AAMA Grade: H-C95.
2. Design Wind Load: plus/minus 99 psf.
3. Impact Resistance: Tested to meet FBC TAS 201 Small and Large Missile Impact, and approved by Miami Dade Building Code Compliance Department.
4. Performance Criteria: Tested to meet FBC TAS 202 and FBC TAS 203, and approved by Miami Dade Building Code Compliance Department.
5. Size: As indicated on drawings.
6. Glazing Material: 9/16 inch laminated glass; two lites of 0.222 inch tempered glass with 0.10 inch interlayer film (storm guard HP), Dade County approved.
7. Glazing Method: Interior glazed with snap-on extruded aluminum glazing stops; glazing penetrating at least 0.421 inch into rabbet using clear colored silicone; clear colored silicone between bead and glass.

8. Exterior Glass 1/4” Tempered with 1/2" Air Space plus 9/16” Impact Glass for a TotalWindow Glazing depth of 1-5/16”.

PART 3 - EXECUTION

3.01 EXAMINATION

A. Do not begin installation until substrates have been properly prepared.

B. If substrate preparation is the responsibility of another installer, notify Architect of unsatisfactory preparation before proceeding.

3.02 PREPARATION

A. Clean surfaces thoroughly prior to installation.

B. Prepare surfaces using the methods recommended by the manufacturer for achieving the best result for the substrate under the project conditions.

3.03 INSTALLATION

A. Install in accordance with manufacturer's instructions.

B. After installation adjust units for proper operation, without binding, sticking, or racking.

C. Seal perimeter of window frame to adjacent construction, on both inside and outside, usingspecified sealant and tool to concave joint.

3.04 PROTECTION

D. Protect installed products until completion of project.

E. Touch-up, repair or replace damaged products before Substantial Completion.

END OF SECTION

SECTION 08710

DOOR HARDWARE

PART 1 - GENERAL

1.01 SUMMARY:

A. Section Includes: Finish Hardware for door openings, except as otherwise specified herein.

1. Door hardware for aluminum doors.
2. Door hardware for wood doors.
3. Keyed cylinders as indicated.

B. Intent of Hardware Groups

1. Should items of hardware not definitely specified be required for completion of the Work, furnish such items of type and quality comparable to adjacent hardware and appropriate for service required.
2. Where items of hardware aren't definitely or correctly specified, are required for completion of the Work, a written statement of such omission, error, or other discrepancy to Architect, prior to date specified for receipt of bids for clarification by addendum; or, furnish such items in the type and quality established by this specification, and appropriate to the service intended.

C. Allowances

1. Refer to Division 1 for allowance amount and procedures.

D. Alternates

1. Refer to Division 1 for Alternates and procedures.

1.02 SUBSTITUTIONS:

A. Comply with Division 1

1.03 SUBMITTALS:

A. Comply with Division 1

B. Special Submittal Requirements: Combine submittals of this Section with Sections listed below to ensure the "design intent" of the system/assembly is understood and can be reviewed together.

C. Product Data: Manufacturer's specifications and technical data including the following:

1. Detailed specification of construction and fabrication.
2. Manufacturer's installation instructions.
3. Wiring diagrams for each electric product specified. Coordinate voltage with electrical before submitting.
4. Submit copies of catalog cuts with hardware schedule.

D. Shop Drawings - Hardware Schedule: Submit 6 complete reproducible copy of detailed hardware schedule in a vertical format.

1. List groups and suffixes in proper sequence.

2. Completely describe door and list architectural door number.
3. Manufacturer, product name, and catalog number.
4. Function, type, and style.
5. Size and finish of each item.
6. Mounting heights.
7. Explanation of abbreviations and symbols used within schedule.

E. Templates: Submit templates and "reviewed Hardware Schedule" to door and frame supplier and others as applicable to enable proper and accurate sizing and locations of cutouts and reinforcing.

F. Samples: (If requested by the Architect)
1. 1 sample of Lever and Rose/Escutcheon design, (pair).
2. 3 samples of metal finishes

G. Contract Closeout Submittals: Comply with Division 1 including specific requirements indicated.
1. Operating and maintenance manuals: Submit 3 sets containing the following.
a) Complete information in care, maintenance, and adjustment, and data on repair and replacement parts, and information on preservation of finishes.
b) Catalog pages for each product.
c) Name, address, and phone number of local representative for each manufacturer.
d) Parts list for each product.
2. Copy of final hardware schedule, edited to reflect, "As installed".
3. Copy of final keying schedule
4. One set of special tools required for maintenance and adjustment of hardware, including changing of cylinders.

1.04 QUALITY ASSURANCE

A. Comply with Division 1.
1. Statement of qualification for distributor and installers.
2. Statement of compliance with regulatory requirements and single source responsibility.
3. Distributor's Qualifications: Firm with 3 years experience in the distribution of commercial hardware.
a) Distributor to employ full time Architectural Hardware Consultants (AHC) for the purpose of scheduling and coordinating hardware and establishing keying schedule.
b) Hardware Schedule shall be prepared and signed by an AHC.
4. Installer's Qualifications: Firm with 3 years experienced in installation of similar hardware to that required for this Project, including specific requirements indicated.

5. Regulatory Label Requirements: Provide testing agency label or stamp on hardware for labeled openings.
   c) Provide UL listed hardware for labeled and 20 minute openings in conformance with requirements for class of opening scheduled.
   d) Underwriters Laboratories requirements have precedence over this specification where conflict exists.
6. Single Source Responsibility: Except where specified in hardware schedule, furnish products of only one manufacturer for each type of hardware.

B. Review Project for extent of finish hardware required to complete the Work. Where there is a conflict between these Specifications and the existing hardware, notify the Architect in writing and furnish hardware in compliance with the Specification unless otherwise directed in writing by the Architect.

1.05 DELIVERY, STORAGE, AND HANDLING

A. Packing and Shipping: Comply with Division 1.
   1. Deliver products in original unopened packaging with legible manufacturer's identification.
   2. Package hardware to prevent damage during transit and storage.
   3. Mark hardware to correspond with "reviewed hardware schedule".
   4. Deliver hardware to door and frame manufacturer upon request.

B. Storage and Protection: Comply with manufacturer's recommendations.

1.06 PROJECT CONDITIONS:

A. Coordinate hardware with other work. Furnish hardware items of proper design for use on doors and frames of the thickness, profile, swing, security and similar requirements indicated, as necessary for the proper installation and function, regardless of omissions or conflicts in the information on the Contract Documents.

B. Review Shop Drawings for doors and entrances to confirm that adequate provisions will be made for the proper installation of hardware.

1.07 WARRANTY:

A. Refer to Conditions of the Contract

B. Manufacturer’s Warranty:
   1. Closers: Ten years
   2. Exit Devices: Three Years
   3. Locksets & Cylinders: Three years
   4. All other Hardware: Two years.

1.08 OWNER’S INSTRUCTION:

A. Instruct Owner’s personnel in operation and maintenance of hardware units.

1.09 MAINTENANCE:

A. Extra Service Materials: Deliver to Owner extra materials from same production run as products installed. Package products with protective covering and identify with descriptive labels. Comply with Division 1 Closeout Submittals Section.

1. Special Tools: Provide special wrenches and tools applicable to each different or special hardware component.
2. Maintenance Tools: Provide maintenance tools and accessories supplied by hardware component manufacturer.
3. Delivery, Storage and Protection: Comply with Owner's requirements for delivery, storage and protection of extra service materials.

B. Maintenance Service: Submit for Owner's consideration maintenance service agreement for electronic products installed.

PART 2 - PRODUCTS

2.1 MANUFACTURERS:

A. The following manufacturers are approved subject to compliance with requirements of the Contract Documents. Approval of manufacturers other than those listed shall be in accordance with Division 1.

<u>Item: Manufacturer: Approved:</u>

Hinges: Stanley: McKinney, Bommer

Continuous Hinges: Stanley: Pemko, Select

Locksets & Cylinders: Best PATD: Owner Standard

Exit Devices: Precision: Owner Standard

Pulls: Rockwood: Trimco RM3320-RM3322

Protection Plates: Rockwood: Trimco

Closers: Stanley: Owner Standard

Stops: Rockwood: Trimco

Overhead Stops: ABH: Rockwood

Gasketing: National Guard: Pemko, Reese

2.2 MATERIALS:

A. Hinges:

1. Template screw hole locations
2. Minimum of 2 permanently lubricated non-detachable bearings
3. Equip with easily seated, non-rising pins
4. Sufficient size to allow 180-degree swing of door
5. Furnish hinges with five knuckles and concealed bearings
6. Provide hinge type as listed in schedule.
7. Furnish 3 hinges per leaf to 7 foot 6 inch height. Add one for each additional 30 inches in height or fraction thereof.

8. Tested and approved by BHMA for all applicable ANSI Standards for type, size, function and finish
9. UL10B listed for Fire

B. Geared Continuous Hinges:

1. Tested and approved by BHMA for ANSI A156.26-1996 Grade 1
2. Anti-spinning through fastener
3. UL10B listed for 3 hour Fire rating
4. Non-handed
5. Lifetime warranty
6. Provide Fire Pins for 3-hour fire ratings
7. Sufficient size to permit door to swing 180 degrees

C. Mortise Type Locks and Latches:

1. Tested and approved by BHMA for ANSI A156.13, Series 1000, Operational Grade 1, Extra-Heavy Duty, Security Grade 2 and be UL10C
2. Fit ANSI A115.1 door preparation
3. Functions and design as indicated in the hardware groups
4. Solid, one-piece, 3/4-inch (19mm) throw, anti-friction latchbolt made of self-lubricating stainless steel
5. Deadbolt functions shall have 1 inch (25mm) throw bolt made of hardened stainless steel
6. Latchbolt and Deadbolt are to extend into the case a minimum of 3/8 inch (9.5mm) when fully extended
7. Auxiliary deadlatch to be made of one piece stainless steel, permanently lubricated
8. Provide sufficient curved strike lip to protect door trim
9. Lever handles must be of forged or cast brass, bronze or stainless steel construction and conform to ANSI A117.1. Levers that contain a hollow cavity are not acceptable
10. Lock shall have self-aligning, thru-bolted trim
11. Levers to operate a roller bearing spindle hub mechanism
12. Mortise cylinders of lock shall have a concealed internal setscrew for securing the cylinder to the lockset. The internal setscrew will be accessible only by removing the core, with the control key, from the cylinder body.
13. Spindle to be designed to prevent forced entry from attacking of lever
14. Provide locksets with 7-pin removable and interchangeable core cylinders
15. Each lever to have independent spring mechanism controlling it
16. Core face must be the same finish as the lockset

D. Exit Devices shall:

1. Tested and approved by BHMA for ANSI 156.3, Grade 1

2. Provide a deadlocking latchbolt
3. Non-fire rated exit devices shall have cylinder dogging.
4. Touchpad shall be “T” style
5. Exposed components shall be of architectural metals and finishes.
6. Lever design shall match lockset lever design
7. Provide strikes as required by application.
8. Fire exit devices to be listed for UL10C
9. UL listed for Accident Hazard
10. Provide vandal resistant or breakaway trim
11. Aluminum vertical rod assemblies are acceptable only when provide with the manufacturers optional top and bottom stainless steel rod guard protectors

E. Cylinders:

1. Provide the necessary cylinder housings, collars, rings & springs as recommended by the manufacturer for proper installation.
2. Provide the proper cylinder cams or tail piece as required to operate all locksets and other keyed hardware items listed in the hardware sets.
3. Coordinate and provide as required for related sections.

F. Door Closers shall:

1. Tested and approved by BHMA for ANSI 156.4, Grade 1
2. UL10C certified
3. Closer shall have extra-duty arms and knuckles
4. Conform to ANSI 117.1
5. Maximum 2 7/16 inch case projection with non-ferrous cover
6. Separate adjusting valves for closing and latching speed, and backcheck
7. Provide adapter plates, shim spacers and blade stop spacers as required by frame and door conditions
8. Full rack and pinion type closer with 1½“ minimum bore
9. Mount closers on non-public side of door, unless otherwise noted in specification
10. Closers shall be non-handed, non-sized and multi-sized 1 through 6

G. Kickplates: Provide with four beveled edges, 10 inches high by width less 2 inches on single doors and 1 inch on pairs of doors. Furnish oval-head countersunk screws to match finish.

H. Seals: All seals shall be finished to match adjacent frame color. Seals shall be furnished as listed in schedule. Material shall be UL listed for labeled openings.

I. Key Control: Provide one Telkee RWC-75-S wall mounted key cabinet complete with hooks, index and tags.

J. Silencers: Furnish silencers on all interior frames, 3 for single doors, 2 for pairs. Omit where any type of seals occur.

K. Overhead Stops: Furnish overhead stops where indicated. Coordinate with door and other door hardware.

2.3 FINISH:

A. Designations used in Schedule of Finish Hardware - 3.5, and elsewhere to indicate hardware finishes are those listed in ANSI/BHMA A156.18 including coordination with traditional U.S. finishes shown by certain manufacturers for their products

B. Powder coat door closers to match other hardware, unless otherwise noted.

C. Aluminum items shall be finished to match predominant adjacent material. Seals to coordinate with frame color.

2.4 KEYS AND KEYING:

A. Provide keyed brass construction cores and keys during the construction period. Construction control and operating keys and core shall not be part of the Owner's permanent keying system or furnished in the same keyway (or key section) as the Owner's permanent keying system. Permanent cores and keys (prepared according to the accepted keying schedule) will be furnished to the Owner.

B. Cylinders, removable and interchangeable core system: Best PATD MX8 7-pin

C. Permanent keys and cores: Stamped with the applicable key mark for identification. These visual key control marks or codes will not include the actual key cuts. Permanent keys will also be stamped "Do Not Duplicate."

D. Transmit Grand Masterkeys, Masterkeys and other Security keys to Owner by Registered Mail, return receipt requested.

E. Furnish keys in the following quantities:

1. 1 each Grand Masterkeys
2. 4 each Masterkeys
3. 2 each Change keys each keyed core
4. 5 each Construction masterkeys
5. 1 each Control keys

F. The Owner, or the Owner's agent, will install permanent cores and return the construction cores to the Hardware Supplier. Construction cores and keys remain the property of the Hardware Supplier.

G. Keying Schedule: Arrange for a keying meeting with Architect Owner and hardware supplier, and other involved parties to ensure locksets and locking hardware, are functionally correct and keying complies with project requirements. Furnish 3 typed copies of keying schedule to Architect.

PART 3 - EXECUTION

3.1 EXAMINATION

A. Verification of conditions: Examine doors, frames, related items and conditions under which Work is to be performed and identify conditions detrimental to proper and or timely completion.

1. Do not proceed until unsatisfactory conditions have been corrected.

3.2 HARDWARE LOCATIONS:

A. Mount hardware units at heights indicated in the following publications except as specifically indicated or required to comply with the governing regulations.

1. Recommended Locations for Builder's Hardware for Standard Steel Doors and Frames, by the Door and Hardware Institute (DHI).

2. NWWDA Industry Standard I.S.1.7, Hardware Locations for Wood Flush Doors.

3.3 INSTALLATION:

A. Install each hardware item per manufacturer's instructions and recommendations. Do not install surface mounted items until finishes have been completed on the substrate. Set units level, plumb and true to line and location. Adjust and reinforce the attachment substrate as necessary for proper installation and operation.

B. Conform to local governing agency security ordinance.

C. ADA Standard: Conform to ANSI A117.1 for positioning requirements for disabled.

D. Installed hardware using the manufacturers fasteners provided. Drill and tap all screw holes located in metallic materials. Do not use "Riv-Nuts" or similar products.

3.4 FIELD QUALITY CONTROL AND FINAL ADJUSTMENT

A. Contractor/Installers, Field Services: After installation is complete, contractor shall inspect completed door openings on site to verify installation of hardware is complete and properly adjusted, in accordance with both the Contract Documents and final shop drawings.

1. Check and adjust closers to ensure proper operation.

a) Adjust closer to complete full closing cycle in less than 4 to 6 seconds without abrupt change of speed between "Sweep" and "Latch" speeds.

b) Adjust "Backcheck" according to manufacturer's instructions.

c) Set exterior doors closers to have 8.5 lbs maximum pressure to open, interior nonrated at 5 lbs, rated openings at 12 lbs

2. Check latchset, lockset, and exit devices are properly installed and adjusted to ensure proper operation.

a) Verify levers are free from binding.

b) Ensure latchbolts and dead bolts are engaged into strike and hardware is functioning.

3. Report findings, in writing, to architect and hardware supplier outlining corrective actions and recommendations.

3.5 SCHEDULE OF FINISH HARDWARE:

Manufacturer List

Code Name

AB ABH Manufacturing Inc.

BE Best Access Systems

BY By Others

NA National Guard

PR Precision

RO Rockwood

SD Security Door Controls

ST Stanley

Finish List

Code Description

AL Aluminum

32D Satin Stainless Steel

626 Satin Chromium Plated

630 Satin Stainless Steel

689 Aluminum Painted

GREY Grey

SP28 Lacquer Sprayed Aluminum

BLACK Black

US26D Chromium Plated, Dull

US32D Stainless Steel, Dull

Option List

Code Description

CD CYLINDER DOGGING

HC Hurricane Code Device

M5 GALVANIZED STEEL CHAIN

SN Sex Nuts (Pkg. of 4)

WC PADLOCK WEATHER COVERS

4BE BEVELLED 4 SIDES

CSK COUNTERSUNK HOLES (12" & UNDER)

EPT Prep EPT Prep (full mortise)

Hardware Sets

SET #1 - Entrance

1 Continuous Hinge 662HD EPT Prep AL ST

1 Exit Device HC 2103 X 1703B CD 630 PR

1 Rim Cylinder 1E-72 PATD 626 BE

1 Mortise Cylinder 1E-74 PATD 626 BE

1 Door Closer D-4550 CS 689 ST

1 Overhead Door Stop C01541 US32D AB

1 Drop Plate P45-180 AL ST

1 Threshold 171A PE

1 Raindrip 16A 4"ODW PE

SET #2 - Exterior

1 Continuous Hinge 662HD EPT Prep AL ST

1 Rim Cylinder 1E-72 PATD 626 BE

1 Mortise Cylinder 1E-74 PATD 626 BE

1 Door Closer D-4550 CS 689 ST

1 Overhead Door Stop C02541 US32D AB

1 Drop Plate P45-180 AL ST

1 Threshold 171A PE

1 Raindrip 16A 4"ODW PE

SET #3 - Gates

1 Padlock 11B770L-606-WC BE

SET #10 – First Aid 102A 102B

3 Hinges CB1960R 4 1/2 x 4 1/2 32D ST

1 Lockset 45H-7R14N PATD 630 BE

1 Wall Bumper 401 US26D RO

1 Soundproofing 127 NA x Head & Jambs NA

1 Auto Door Bottom 225 N NA

SET #11 – Service 103A

3 Hinges CB1960R 4 1/2 x 4 1/2 32D ST

1 Lockset 45H-7A14N PATD 630 BE

1 Door Closer D-4551 STD W/PA BRKT SN 689 ST

1 Overhead Door Stop C01541 US32D AB

1 Protection Plate K1050 10" x 2"LDW 4BE CSK US32D RO

1 Protection Plate K1050 10" x 2" LDW 4BE CSK US32D RO

3 Door Silencers 608 GREY RO

SET #12 - Restroom 105A

3 Hinges CB1960R 4 1/2 x 4 1/2 32D ST

1 Lockset 45H-7AB14N PATD 630 BE

1 Door Closer D-4551 STD W/PA BRKT SN 689 ST

1 Wall Bumper 401 US26D RO

1 Protection Plate K1050 10" x 2"LDW 4BE CSK US32D RO

1 Protection Plate K1050 10" x 2"LDW 4BE CSK US32D RO

1 Smoke Seal 5050B x Head & Jambs NA

Opening List

Opening Hdw Set	Opening Label
X1	Set #1
X2	Set #1
X3	Set #2
102A	SET #11
102B	SET #11
103A	SET #11
105A	SET #10
Men's Gate	Set #3
Women's Gate	Set #3

END OF SECTION

SECTION 08710

DOOR HARDWARE

PART 1 - GENERAL

1.01 SUMMARY:

A. Section Includes: Finish Hardware for door openings, except as otherwise specified herein.

1. Door hardware for aluminum doors.
2. Door hardware for wood doors.
3. Keyed cylinders as indicated.

B. Intent of Hardware Groups

1. Should items of hardware not definitely specified be required for completion of the Work, furnish such items of type and quality comparable to adjacent hardware and appropriate for service required.
2. Where items of hardware aren't definitely or correctly specified, are required for completion of the Work, a written statement of such omission, error, or other discrepancy to Architect, prior to date specified for receipt of bids for clarification by addendum; or, furnish such items in the type and quality established by this specification, and appropriate to the service intended.

C. Allowances

1. Refer to Division 1 for allowance amount and procedures.

D. Alternates

1. Refer to Division 1 for Alternates and procedures.

1.02 SUBSTITUTIONS:

A. Comply with Division 1

1.03 SUBMITTALS:

A. Comply with Division 1

B. Special Submittal Requirements: Combine submittals of this Section with Sections listed below to ensure the "design intent" of the system/assembly is understood and can be reviewed together.

C. Product Data: Manufacturer's specifications and technical data including the following:

1. Detailed specification of construction and fabrication.
2. Manufacturer's installation instructions.
3. Wiring diagrams for each electric product specified. Coordinate voltage with electrical before submitting.
4. Submit copies of catalog cuts with hardware schedule.

D. Shop Drawings - Hardware Schedule: Submit 6 complete reproducible copy of detailed hardware schedule in a vertical format.

1. List groups and suffixes in proper sequence.

2. Completely describe door and list architectural door number.
3. Manufacturer, product name, and catalog number.
4. Function, type, and style.
5. Size and finish of each item.
6. Mounting heights.
7. Explanation of abbreviations and symbols used within schedule.

E. Templates: Submit templates and "reviewed Hardware Schedule" to door and frame supplier and others as applicable to enable proper and accurate sizing and locations of cutouts and reinforcing.

F. Samples: (If requested by the Architect)
1. 1 sample of Lever and Rose/Escutcheon design, (pair).
2. 3 samples of metal finishes

G. Contract Closeout Submittals: Comply with Division 1 including specific requirements indicated.
1. Operating and maintenance manuals: Submit 3 sets containing the following.
a) Complete information in care, maintenance, and adjustment, and data on repair and replacement parts, and information on preservation of finishes.
b) Catalog pages for each product.
c) Name, address, and phone number of local representative for each manufacturer.
d) Parts list for each product.
2. Copy of final hardware schedule, edited to reflect, "As installed".
3. Copy of final keying schedule
4. One set of special tools required for maintenance and adjustment of hardware, including changing of cylinders.

1.04 QUALITY ASSURANCE

A. Comply with Division 1.
1. Statement of qualification for distributor and installers.
2. Statement of compliance with regulatory requirements and single source responsibility.
3. Distributor's Qualifications: Firm with 3 years experience in the distribution of commercial hardware.
a) Distributor to employ full time Architectural Hardware Consultants (AHC) for the purpose of scheduling and coordinating hardware and establishing keying schedule.
b) Hardware Schedule shall be prepared and signed by an AHC.
4. Installer's Qualifications: Firm with 3 years experienced in installation of similar hardware to that required for this Project, including specific requirements indicated.

5. Regulatory Label Requirements: Provide testing agency label or stamp on hardware for labeled openings.
   c) Provide UL listed hardware for labeled and 20 minute openings in conformance with requirements for class of opening scheduled.
   d) Underwriters Laboratories requirements have precedence over this specification where conflict exists.
6. Single Source Responsibility: Except where specified in hardware schedule, furnish products of only one manufacturer for each type of hardware.

B. Review Project for extent of finish hardware required to complete the Work. Where there is a conflict between these Specifications and the existing hardware, notify the Architect in writing and furnish hardware in compliance with the Specification unless otherwise directed in writing by the Architect.

1.05 DELIVERY, STORAGE, AND HANDLING

A. Packing and Shipping: Comply with Division 1.
   1. Deliver products in original unopened packaging with legible manufacturer's identification.
   2. Package hardware to prevent damage during transit and storage.
   3. Mark hardware to correspond with "reviewed hardware schedule".
   4. Deliver hardware to door and frame manufacturer upon request.

B. Storage and Protection: Comply with manufacturer's recommendations.

1.06 PROJECT CONDITIONS:

A. Coordinate hardware with other work. Furnish hardware items of proper design for use on doors and frames of the thickness, profile, swing, security and similar requirements indicated, as necessary for the proper installation and function, regardless of omissions or conflicts in the information on the Contract Documents.

B. Review Shop Drawings for doors and entrances to confirm that adequate provisions will be made for the proper installation of hardware.

1.07 WARRANTY:

A. Refer to Conditions of the Contract

B. Manufacturer’s Warranty:
   1. Closers: Ten years
   2. Exit Devices: Three Years
   3. Locksets & Cylinders: Three years
   4. All other Hardware: Two years.

1.08 OWNER’S INSTRUCTION:

A. Instruct Owner’s personnel in operation and maintenance of hardware units.

1.09 MAINTENANCE:

A. Extra Service Materials: Deliver to Owner extra materials from same production run as products installed. Package products with protective covering and identify with descriptive labels. Comply with Division 1 Closeout Submittals Section.

1. Special Tools: Provide special wrenches and tools applicable to each different or special hardware component.
2. Maintenance Tools: Provide maintenance tools and accessories supplied by hardware component manufacturer.
3. Delivery, Storage and Protection: Comply with Owner's requirements for delivery, storage and protection of extra service materials.

B. Maintenance Service: Submit for Owner's consideration maintenance service agreement for electronic products installed.

PART 2 - PRODUCTS

2.1 MANUFACTURERS:

A. The following manufacturers are approved subject to compliance with requirements of the Contract Documents. Approval of manufacturers other than those listed shall be in accordance with Division 1.

<u>Item: Manufacturer: Approved:</u>

Hinges: Stanley: McKinney, Bommer

Continuous Hinges: Stanley: Pemko, Select

Locksets & Cylinders: Best PATD: Owner Standard

Exit Devices: Precision: Owner Standard

Pulls: Rockwood: Trimco RM3320-RM3322

Protection Plates: Rockwood: Trimco

Closers: Stanley: Owner Standard

Stops: Rockwood: Trimco

Overhead Stops: ABH: Rockwood

Gasketing: National Guard: Pemko, Reese

2.2 MATERIALS:

A. Hinges:

1. Template screw hole locations
2. Minimum of 2 permanently lubricated non-detachable bearings
3. Equip with easily seated, non-rising pins
4. Sufficient size to allow 180-degree swing of door
5. Furnish hinges with five knuckles and concealed bearings
6. Provide hinge type as listed in schedule.
7. Furnish 3 hinges per leaf to 7 foot 6 inch height. Add one for each additional 30 inches in height or fraction thereof.

8. Tested and approved by BHMA for all applicable ANSI Standards for type, size, function and finish
9. UL10B listed for Fire

B. Geared Continuous Hinges:

1. Tested and approved by BHMA for ANSI A156.26-1996 Grade 1
2. Anti-spinning through fastener
3. UL10B listed for 3 hour Fire rating
4. Non-handed
5. Lifetime warranty
6. Provide Fire Pins for 3-hour fire ratings
7. Sufficient size to permit door to swing 180 degrees

C. Mortise Type Locks and Latches:

1. Tested and approved by BHMA for ANSI A156.13, Series 1000, Operational Grade 1, Extra-Heavy Duty, Security Grade 2 and be UL10C
2. Fit ANSI A115.1 door preparation
3. Functions and design as indicated in the hardware groups
4. Solid, one-piece, 3/4-inch (19mm) throw, anti-friction latchbolt made of self-lubricating stainless steel
5. Deadbolt functions shall have 1 inch (25mm) throw bolt made of hardened stainless steel
6. Latchbolt and Deadbolt are to extend into the case a minimum of 3/8 inch (9.5mm) when fully extended
7. Auxiliary deadlatch to be made of one piece stainless steel, permanently lubricated
8. Provide sufficient curved strike lip to protect door trim
9. Lever handles must be of forged or cast brass, bronze or stainless steel construction and conform to ANSI A117.1. Levers that contain a hollow cavity are not acceptable
10. Lock shall have self-aligning, thru-bolted trim
11. Levers to operate a roller bearing spindle hub mechanism
12. Mortise cylinders of lock shall have a concealed internal setscrew for securing the cylinder to the lockset. The internal setscrew will be accessible only by removing the core, with the control key, from the cylinder body.
13. Spindle to be designed to prevent forced entry from attacking of lever
14. Provide locksets with 7-pin removable and interchangeable core cylinders
15. Each lever to have independent spring mechanism controlling it
16. Core face must be the same finish as the lockset

D. Exit Devices shall:

1. Tested and approved by BHMA for ANSI 156.3, Grade 1

2. Provide a deadlocking latchbolt
3. Non-fire rated exit devices shall have cylinder dogging.
4. Touchpad shall be “T” style
5. Exposed components shall be of architectural metals and finishes.
6. Lever design shall match lockset lever design
7. Provide strikes as required by application.
8. Fire exit devices to be listed for UL10C
9. UL listed for Accident Hazard
10. Provide vandal resistant or breakaway trim
11. Aluminum vertical rod assemblies are acceptable only when provide with the manufacturers optional top and bottom stainless steel rod guard protectors

E. Cylinders:

1. Provide the necessary cylinder housings, collars, rings & springs as recommended by the manufacturer for proper installation.
2. Provide the proper cylinder cams or tail piece as required to operate all locksets and other keyed hardware items listed in the hardware sets.
3. Coordinate and provide as required for related sections.

F. Door Closers shall:

1. Tested and approved by BHMA for ANSI 156.4, Grade 1
2. UL10C certified
3. Closer shall have extra-duty arms and knuckles
4. Conform to ANSI 117.1
5. Maximum 2 7/16 inch case projection with non-ferrous cover
6. Separate adjusting valves for closing and latching speed, and backcheck
7. Provide adapter plates, shim spacers and blade stop spacers as required by frame and door conditions
8. Full rack and pinion type closer with 1½“ minimum bore
9. Mount closers on non-public side of door, unless otherwise noted in specification
10. Closers shall be non-handed, non-sized and multi-sized 1 through 6

G. Kickplates: Provide with four beveled edges, 10 inches high by width less 2 inches on single doors and 1 inch on pairs of doors. Furnish oval-head countersunk screws to match finish.

H. Seals: All seals shall be finished to match adjacent frame color. Seals shall be furnished as listed in schedule. Material shall be UL listed for labeled openings.

I. Key Control: Provide one Telkee RWC-75-S wall mounted key cabinet complete with hooks, index and tags.

J. Silencers: Furnish silencers on all interior frames, 3 for single doors, 2 for pairs. Omit where any type of seals occur.

K. Overhead Stops: Furnish overhead stops where indicated. Coordinate with door and other door hardware.

2.3 FINISH:

A. Designations used in Schedule of Finish Hardware - 3.5, and elsewhere to indicate hardware finishes are those listed in ANSI/BHMA A156.18 including coordination with traditional U.S. finishes shown by certain manufacturers for their products

B. Powder coat door closers to match other hardware, unless otherwise noted.

C. Aluminum items shall be finished to match predominant adjacent material. Seals to coordinate with frame color.

2.4 KEYS AND KEYING:

A. Provide keyed brass construction cores and keys during the construction period. Construction control and operating keys and core shall not be part of the Owner's permanent keying system or furnished in the same keyway (or key section) as the Owner's permanent keying system. Permanent cores and keys (prepared according to the accepted keying schedule) will be furnished to the Owner.

B. Cylinders, removable and interchangeable core system: Best PATD MX8 7-pin

C. Permanent keys and cores: Stamped with the applicable key mark for identification. These visual key control marks or codes will not include the actual key cuts. Permanent keys will also be stamped "Do Not Duplicate."

D. Transmit Grand Masterkeys, Masterkeys and other Security keys to Owner by Registered Mail, return receipt requested.

E. Furnish keys in the following quantities:

1. 1 each Grand Masterkeys
2. 4 each Masterkeys
3. 2 each Change keys each keyed core
4. 5 each Construction masterkeys
5. 1 each Control keys

F. The Owner, or the Owner's agent, will install permanent cores and return the construction cores to the Hardware Supplier. Construction cores and keys remain the property of the Hardware Supplier.

G. Keying Schedule: Arrange for a keying meeting with Architect Owner and hardware supplier, and other involved parties to ensure locksets and locking hardware, are functionally correct and keying complies with project requirements. Furnish 3 typed copies of keying schedule to Architect.

PART 3 - EXECUTION

3.1 EXAMINATION

A. Verification of conditions: Examine doors, frames, related items and conditions under which Work is to be performed and identify conditions detrimental to proper and or timely completion.

1. Do not proceed until unsatisfactory conditions have been corrected.

3.2 HARDWARE LOCATIONS:

A. Mount hardware units at heights indicated in the following publications except as specifically indicated or required to comply with the governing regulations.

1. Recommended Locations for Builder's Hardware for Standard Steel Doors and Frames, by the Door and Hardware Institute (DHI).

2. NWWDA Industry Standard I.S.1.7, Hardware Locations for Wood Flush Doors.

3.3 INSTALLATION:

A. Install each hardware item per manufacturer's instructions and recommendations. Do not install surface mounted items until finishes have been completed on the substrate. Set units level, plumb and true to line and location. Adjust and reinforce the attachment substrate as necessary for proper installation and operation.

B. Conform to local governing agency security ordinance.

C. ADA Standard: Conform to ANSI A117.1 for positioning requirements for disabled.

D. Installed hardware using the manufacturers fasteners provided. Drill and tap all screw holes located in metallic materials. Do not use "Riv-Nuts" or similar products.

3.4 FIELD QUALITY CONTROL AND FINAL ADJUSTMENT

A. Contractor/Installers, Field Services: After installation is complete, contractor shall inspect completed door openings on site to verify installation of hardware is complete and properly adjusted, in accordance with both the Contract Documents and final shop drawings.

1. Check and adjust closers to ensure proper operation.

a) Adjust closer to complete full closing cycle in less than 4 to 6 seconds without abrupt change of speed between "Sweep" and "Latch" speeds.

b) Adjust "Backcheck" according to manufacturer's instructions.

c) Set exterior doors closers to have 8.5 lbs maximum pressure to open, interior nonrated at 5 lbs, rated openings at 12 lbs

2. Check latchset, lockset, and exit devices are properly installed and adjusted to ensure proper operation.

a) Verify levers are free from binding.

b) Ensure latchbolts and dead bolts are engaged into strike and hardware is functioning.

3. Report findings, in writing, to architect and hardware supplier outlining corrective actions and recommendations.

3.5 SCHEDULE OF FINISH HARDWARE:

Manufacturer List

Code Name

AB ABH Manufacturing Inc.

BE Best Access Systems

BY By Others

NA National Guard

PR Precision

RO Rockwood

SD Security Door Controls

ST Stanley

Finish List

Code Description

AL Aluminum

32D Satin Stainless Steel

626 Satin Chromium Plated

630 Satin Stainless Steel

689 Aluminum Painted

GREY Grey

SP28 Lacquer Sprayed Aluminum

BLACK Black

US26D Chromium Plated, Dull

US32D Stainless Steel, Dull

Option List

Code Description

CD CYLINDER DOGGING

HC Hurricane Code Device

M5 GALVANIZED STEEL CHAIN

SN Sex Nuts (Pkg. of 4)

WC PADLOCK WEATHER COVERS

4BE BEVELLED 4 SIDES

CSK COUNTERSUNK HOLES (12" & UNDER)

EPT Prep EPT Prep (full mortise)

Hardware Sets

SET #1 - Entrance

1 Continuous Hinge 662HD EPT Prep AL ST

1 Exit Device HC 2103 X 1703B CD 630 PR

1 Rim Cylinder 1E-72 PATD 626 BE

1 Mortise Cylinder 1E-74 PATD 626 BE

1 Door Closer D-4550 CS 689 ST

1 Overhead Door Stop C01541 US32D AB

1 Drop Plate P45-180 AL ST

1 Threshold 171A PE

1 Raindrip 16A 4"ODW PE

SET #2 - Exterior

1 Continuous Hinge 662HD EPT Prep AL ST

1 Rim Cylinder 1E-72 PATD 626 BE

1 Mortise Cylinder 1E-74 PATD 626 BE

1 Door Closer D-4550 CS 689 ST

1 Overhead Door Stop C02541 US32D AB

1 Drop Plate P45-180 AL ST

1 Threshold 171A PE

1 Raindrip 16A 4"ODW PE

SET #3 - Gates

1 Padlock 11B770L-606-WC BE

SET #10 – First Aid 102A 102B

3 Hinges CB1960R 4 1/2 x 4 1/2 32D ST

1 Lockset 45H-7R14N PATD 630 BE

1 Wall Bumper 401 US26D RO

1 Soundproofing 127 NA x Head & Jambs NA

1 Auto Door Bottom 225 N NA

SET #11 – Service 103A

3 Hinges CB1960R 4 1/2 x 4 1/2 32D ST

1 Lockset 45H-7A14N PATD 630 BE

1 Door Closer D-4551 STD W/PA BRKT SN 689 ST

1 Overhead Door Stop C01541 US32D AB

1 Protection Plate K1050 10" x 2"LDW 4BE CSK US32D RO

1 Protection Plate K1050 10" x 2" LDW 4BE CSK US32D RO

3 Door Silencers 608 GREY RO

SET #12 - Restroom 105A

3 Hinges CB1960R 4 1/2 x 4 1/2 32D ST

1 Lockset 45H-7AB14N PATD 630 BE

1 Door Closer D-4551 STD W/PA BRKT SN 689 ST

1 Wall Bumper 401 US26D RO

1 Protection Plate K1050 10" x 2"LDW 4BE CSK US32D RO

1 Protection Plate K1050 10" x 2"LDW 4BE CSK US32D RO

1 Smoke Seal 5050B x Head & Jambs NA

Opening List

Opening Hdw Set	Opening Label
X1	Set #1
X2	Set #1
X3	Set #2
102A	SET #11
102B	SET #11
103A	SET #11
105A	SET #10
Men's Gate	Set #3
Women's Gate	Set #3

END OF SECTION

SECTION 08800

GLAZING

PART 1 – GENERAL

All exterior glazing shall be pre-approved by TDI, be impact resistant windows as per TDI requirements, and shall be good for the wind pressures shown on the structural drawings.

1.01 SECTION INCLUDES

A. Glass.

1.02 RELATED SECTIONS

A. Section 06200 - Finish Carpentry: Interior window components with requirement for glass.

B. Section 08589 – Exterior Aluminum Windows: Glazed windows.

1.03 REFERENCES

A. 16 CFR 1201 - Safety Standard for Architectural Glazing Materials; 2003.

B. ASTM C 1193 - Standard Guide for Use of Joint Sealants; 2000.

C. GANA (SM) - FGMA Sealant Manual; Glass Association of North America; 1990.

D. Texas Windstorm requirements as amended by the State Board of Insurance.

1.04 SUBMITTALS

A. See Section 01300 - Administrative Requirements, for submittal procedures.

B. Product Data on Glass Types: Provide structural, physical and environmental characteristics, size limitations, special handling or installation requirements.

C. Samples: Submit two samples 12 x 12 inch in size of glass units, showing coloration and design.

1.05 QUALITY ASSURANCE

A. Installer Qualifications: Company specializing in performing the work of this section with minimum 5 years documented experience.

1.06 ENVIRONMENTAL REQUIREMENTS

A. Do not install glazing when ambient temperature is less than 50 degrees F.

B. Maintain minimum ambient temperature before, during and 24 hours after installation of glazing compounds.

1.07 WARRANTY

A. See Section 01780 - Closeout Submittals, for additional warranty requirements.

B. Provide a five (5) year warranty to include coverage for delamination of laminated glass and replacement of same.

PART 2 - PRODUCTS

2.01 FLAT GLASS MATERIALS

A. Manufacturers:

1. Old Castle Glass – Vistawall for impact galss.

2. Pilkington Building Products North America: www.pilkington.com.
3. PPG Industries, Inc: www.ppg.com, product specified below
4. Substitutions: Refer to Section 01600 - Product Requirements.
5. AFG Industries, Inc: www.afgglass.com.

B. Safety Glass: Color as scheduled; fully tempered with horizontal tempering.

1. 1. Laminated with 0.015 inch thick plastic interlayer; comply with ASTM C 1172, where so scheduled.
2. Comply with 16 CFR 1201 test requirements for Category II.
3. 6 mm minimum thick
4. Provide this type of glazing in the locations required by code or where shown on drawings.

C. Impact Resistant Glass: Series FG-5100 “STORM MAX™” by Old Castle Glass®, Vistalwall®

1. Large Missle Impact “ Storm Glass” hurricane resistant glass
2. 1- 5/16” overall thickness insulating laminated glass
3. Typical for all exterior glazing including door.
4. Outer ¼” layer PPG vista cool with sungate 500 low-E “Solar” (grey) – submit samples 12” x 12” for final approval. Shading coefficient of .40 with 0.34 with solar heat gain coefficient
5. Inner layer 9/16” tempered impact with 1/2" air space for an overall glazing section of 1-5/16” for air conditioned spaces.
6. Testing ASTM E1886, E1996 Entrance Door MSD-375 Impact Resistant.

2.02 GLAZING ACCESSORIES

A. Setting Blocks: Neoprene, 80 to 90 Shore A durometer hardness, ASTM C 864 Option II. Length of 0.1 inch for each square foot of glazing or minimum 4 inch x width of glazing rabbet space minus 1/16 inch x height to suit glazing method and pane weight and area.

B. Spacer Shims: Neoprene, 50 to 60 Shore A durometer hardness, ASTM C 864 Option II. Minimum 3 inch long x one half the height of the glazing stop x thickness to suit application, self adhesive on one face.

C. Product Specifications (Minimum Perofrmance):

Visible light transmittance 57%

Total solar transmittance 24%

Total solar reflectance 7%

Visible light reflectance 12%

Winter U-value 0.35

Solar heat gain coefficient 0.34

Shading coefficient 0.40

Total solar energy rejected 7%

PART 3 - EXECUTION

3.01 EXAMINATION

A. Verify that openings for glazing are correctly sized and within tolerance.

B. Verify that surfaces of glazing channels or recesses are clean, free of obstructions that may impede moisture movement; weeps are clear, and ready to receive glazing.

3.02 PREPARATION

A. Clean contact surfaces with solvent and wipe dry.

B. Seal porous glazing channels or recesses with substrate compatible primer or sealer.

C. Prime surfaces scheduled to receive sealant.

D. Install sealants in accordance with ASTM C 1193 and FGMA Sealant Manual.

E. Install sealant in accordance with manufacturer's instructions.

3.03 INSTALLATION - EXTERIOR WET/DRY METHOD (GASKET AND SEALANT)

A. Place setting blocks at 1/4 points with edge block no more than 6 inches from corners.

B. Rest glazing on setting blocks and push against fixed stop with sufficient pressure on gasket to attain full contact.

C. Apply sealant to uniform line, flush with sight line. Tool or wipe sealant surface smooth.

3.04 INSTALLATION - INTERIOR DRY METHOD (TAPE AND TAPE)

A. Cut glazing tape to length and set against permanent stops, projecting 1/16 inch (1.6 mm) above sight line.

B. Place setting blocks at 1/4 points with edge block no more than 6 inches from corners.

C. Rest glazing on setting blocks and push against tape for full contact at perimeter of pane or unit.

D. Place glazing tape on free perimeter of glazing in same manner described above.

E. Install removable stop without displacement of tape. Exert pressure on tape for full continuous contact.

F. Knife trim protruding tape.

3.05 CLEANING

A. Remove glazing materials from finish surfaces.

B. Remove labels after Work is complete.

C. Clean glass and adjacent surfaces.

3.06 PROTECTION OF FINISHED WORK

A. After installation, mark pane with an 'X' by using removable plastic tape or paste; do not mark heat absorbing or reflective glass units.

B. Submit testing certification for all impact glass for owner’s record.

END OF SECTION

SECTION 08910

LOUVERS

PART 1 - GENERAL

1.01 SECTION INCLUDES

A. Louvers, frames, and accessories for intake and exhaust conditions.

B. Reference drawings: Mechanical, architectural and structural concrete panel drawings for locations.

C. Verify sizes and locations with mechanical subcontractor for a complete installation.

1.02 REFERENCES

A. AAMA 611 - Voluntary Specification for Anodized Architectural Aluminum; American Architectural Manufacturers Association; 1998.

B. AMCA 500-L - Laboratory Methods of Testing Louvers for Rating; Air Movement and Control Association International, Inc.; 1999.

1.03 SUBMITTALS

A. See Section 01300 - Administrative Requirements, for submittal procedures.

B. Product Data: Provide data describing design characteristics, maximum recommended air velocity, design free area, materials and finishes.

C. Shop Drawings: Indicate louver layout plan and elevations, opening and clearance dimensions, tolerances; head, jamb and sill details; blade configuration, screens, blankout areas required, and frames.

D. Test Reports: Independent agency reports showing compliance with specified performance criteria.

1.04 QUALITY ASSURANCE

A. Manufacturer Qualifications: Company specializing in manufacturing products of the type specified in this section, with minimum three years of documented experience.

1.05 PROJECT CONDITIONS

A. Coordinate work of this section with installation of mechanical ductwork.

1.06 WARRANTY

A. See Section 01780 - Closeout Submittals, for additional warranty requirements.

B. Provide twenty year manufacturer warranty against distortion, metal degradation, and failure of connections.

1. Finish: Include coverage against degradation of exterior finish.

PART 2 – PRODUCTS

2.01 MANUFACTURERS

A. Wall Louvers:

1. Airline Products; Product LSA6D-DC.

2. C/S Louvers; Product DC-7044.

3. Greenheck; Product ESD-603D.
4. Substitutions: See Section 01600 - Product Requirements.

2.02 LOUVERS

A. Louvers: Factory fabricated and assembled, complete with frame, mullions, and accessories.
   1. Wind Load Resistance: Design to resist positive and negative wind load 150 mph without damage or permanent deformation.
   2. Certification: Miami-Dade County; PA-100(A), PA-201, PA-202, and PA-203.
   3. Intake Louvers: Design to allow maximum of 0.01 oz/sqft water penetration at calculated intake design velocity based on design air flow and actual free area, when tested in accordance with AMCA 500-L.
   4. Drainable Blades: Continuous rain stop at front or rear of blade aligned with vertical gutter recessed into both jambs of frame.
   5. Screens: Provide insect screens at intake louvers and bird screens at exhaust louvers.
B. Stationary Louvers: Horizontal blade, extruded aluminum construction, with intermediate mullions matching frame.
   1. Free Area: 48 percent, minimum.
   2. Blades: Straight.
   3. Frame: Depth as required (7" maximum), channel profile; corner joints mitered and mechanically fastened, with continuous recessed caulking channel each side.
   4. Metal Thickness: Frame 0.125 inch; blades 0.125 inch.
   5. Finish: Clear Anodized Aluminium.

2.03 MATERIALS

A. Extruded Aluminum: ASTM B 221 (ASTM B 221M).
   1. Finish: Clear Anodized Aluminium.
B. Bird Screen: Interwoven wire mesh of aluminum, 0.063 inch diameter wire, 1/2 inch open weave, square design.

2.04 ACCESSORIES

A. Blank-Off Panels: Same material as louver, painted black on exterior side; provide where duct connected to louver is smaller than louver frame, sealing off louver area outside duct.
B. Screens: Frame of same material as louver, with reinforced corners; removable, screw attached; installed on inside face of louver frame.
C. Fasteners and Anchors: Stainless steel with butyl separation sheet.
D. Flashings: Of same material as louver frame, formed to required shape, single length in one piece per location.

PART 3 - EXECUTION

3.01 EXAMINATION

A. Verify that prepared openings and flashings are ready to receive work and opening dimensions are as indicated on shop drawings.

B. Verify that field measurements are as indicated.

3.02 INSTALLATION

A. Install louver assembly in accordance with manufacturer's instructions.

B. Install louvers level and plumb.

C. Install flashings and align louver assembly to ensure moisture shed from flashings and diversion of moisture to exterior.

D. Secure louver frames in openings with concealed fasteners.

E. Install perimeter sealant and backing rod in accordance with Section 07900.

3.03 CLEANING

A. Strip protective finish coverings.

B. Clean surfaces and components.

END OF SECTION

SECTION 09260

GYPSUM BOARD ASSEMBLIES

PART 1 - GENERAL

1.01 SECTION INCLUDES

A. Acoustic insulation.

B. Gypsum wallboard.

C. Joint treatment and accessories.

1.02 RELATED SECTIONS

A. Section 06100 - Rough Carpentry: Building framing and sheathing.

B. Section 07900 - Joint Sealers: Acoustic sealant.

1.03 REFERENCES

A. ASTM C 36/C 36M - Standard Specification for Gypsum Wallboard; 2001.

B. ASTM C 475/C 475M - Standard Specification for Joint Compound and Joint Tape for Finishing Gypsum Board; 2002.

C. ASTM C 665 - Standard Specification for Mineral-Fiber Blanket Thermal Insulation for Light Frame Construction and Manufactured Housing; 2001.

D. ASTM C 840 - Standard Specification for Application and Finishing of Gypsum Board; 2004.

E. ASTM C 1047 - Standard Specification for Accessories for Gypsum Wallboard and Gypsum Veneer Base; 1999.

F. ASTM C 1396/C 1396M - Standard Specification for Gypsum Board; 2003a.

G. ASTM D 3273 - Standard Test Method for Resistance to Growth of Mold on the Surface of Interior Coatings in an Environmental Chamber; 2000.

H. GA-600 - Fire Resistance Design Manual; Gypsum Association; 2003.

I. UL (FRD) - Fire Resistance Directory; Underwriters Laboratories Inc.; current edition.

1.04 SYSTEM DESCRIPTION

A. Acoustic Attenuation for Interior Partitions Indicated to receive Sound Attenuation: STC of 45- 49 calculated in accordance with ASTM E 413, based on tests conducted in accordance with ASTM E 90.

1.05 SUBMITTALS

A. See Section 01300 - Administrative Requirements, for submittal procedures.

B. Product Data: Provide data on metal framing, gypsum board, accessories, and joint finishing system.

C. Product Data: Provide manufacturer's data on partition head to structure connectors, showing compliance with requirements.

1.06 QUALITY ASSURANCE

A. Perform in accordance with ASTM C 840. Comply with requirements of GA-600 for fire-rated assemblies.

1. Maintain one copy of standards at project site.

A. Applicator Qualifications: Company specializing in performing gypsum board application and finishing, with minimum 5 years of documented experience.

PART 2 - PRODUCTS

2.01 WOOD FRAMING MATERIALS

1. Wood Framing

a. Section 06100 Rough Carpentry.

2.02 GYPSUM BOARD MATERIALS

A. Manufacturers:

1. G-P Gypsum Corporation: www.gp.com.
2. National Gypsum Company: www.nationalgypsum.com.
3. USG Corporation: www.usg.com.
4. Substitutions: See Section 01600 - Product Requirements.

B. Gypsum Wallboard: ASTM C 36/C 36M and ASTM C 1396/C 1396M. Sizes to minimize joints in place; ends square cut.

1. Abuse Resistant Mold ResistantType:

a. Application: Use for vertical and horizontal surfaces.
b. Thickness: 5/8 inch.
c. Edges: Tapered.
d. Mold Score: Score of 10 on the ASTM D3273-00 “Standard Test Method for Resistance to Growth of Mold on the Surface of Interior Coatings in an Environmental Chamber,” Fiberock Interior Panels.
e. Flexural strength, parallel, lbf >100
f. Flexural strength, perpendicular, lbf > 140

2. Cement Backer Board:

a. Aggregated Portland cement board with woven glass fiber mesh facing; complying with ANSI A118.9.
b. Thickness: ½ inch.
c. Acceptable product and manufacturer: Durock Cement Board by USG or equal.

2.03 ACCESSORIES

A. Acoustic Insulation: ASTM C 665; preformed glass fiber, friction fit type, unfaced. Thickness: 3 inch.

B. Acoustic Sealant: As specified in Section 07900.

C. Finishing Accessories:

1. Types: pvc, plastic,or vinyl trim and corner beads.
2. Special Shapes: In addition to conventional corner bead and control joints, provide Ubead at exposed panel edges.

D. Joint Materials: ASTM C 475 and as recommended by gypsum board manufacturer for project conditions.

1. Tape: 2 inch wide, coated glass fiber tape for joints and interior corners, except as otherwise indicated.
2. Ready-mixed vinyl-based joint compound.
3. Chemical hardening type compound.

E. Screws: ASTM C 954; steel drill screws for application of gypsum board to loadbearing steel studs.

PART 3 - EXECUTION

3.01 EXAMINATION

A. Verify that project conditions are appropriate for work of this section to commence.

3.02 FRAMING VERIFICATION

A. Verify that wood framing is ready to receive gypsum wall board.

3.03 ACOUSTIC ACCESSORIES INSTALLATION

A. Acoustic Insulation: Place tightly within spaces, around cut openings, behind and around electrical and mechanical items within partitions, and tight to items passing through partitions.

B. Acoustic Sealant: Install in accordance with manufacturer's instructions.

1. Place one bead continuously on substrate before installation of framing members.
2. Place continuous bead at perimeter of each layer of gypsum board.
3. In non-fire-rated construction, seal around all penetrations by conduit, pipe, ducts, and rough-in boxes.

3.04 GYPSUM BOARD AND GLASS MAT FACED BOARD INSTALLATION

A. Comply with ASTM C 840 and manufacturer's instructions. Install to minimize butt end joints, especially in highly visible locations.

B. Single-Layer Non-Rated: Install gypsum board in most economical direction, with ends and edges occurring over firm bearing.

C. Fire-Rated Construction: Install gypsum board in strict compliance with requirements of listing authority.

D. Glass Mat Faced Gypsum Board: Install in strict accordance with manufacturer's instructions.

E. Installation on Wood Framing: For rated assemblies, comply with requirements of listing authority. For non-rated assemblies, install as follows:

1. Single-Layer Applications: Screw attachment.

F. Moisture Protection: Treat cut edges and holes in moisture resistant gypsum board with sealant.

3.05 INSTALLATION OF TRIM AND ACCESSORIES

A. Control Joints: Place control joints consistent with lines of building spaces and as indicated.

1. Not more than 30 feet apart on walls over 50 feet long.

B. Corner Beads: Install at external corners, using longest practical lengths.

C. Edge Trim: Install at locations where gypsum board abuts dissimilar materials and as indicated.

3.06 JOINT TREATMENT

A. Glass Mat Faced Gypsum Board: Use fiberglass joint tape, bedded and finished with chemical hardening type joint compound.

B. Finish gypsum board in scheduled areas in accordance with levels defined in ASTM C 840 and as scheduled below.

C. Tape, fill, and sand exposed joints, edges, and corners to produce smooth surface ready to receive finishes.

1. Feather coats of joint compound so that camber is maximum 1/32 inch.

3.07 TOLERANCES

A. Maximum Variation of Finished Gypsum Board Surface from True Flatness: 1/8 inch in 10 feetin any direction.

3.08 FINISH LEVEL SCHEDULE

A. LEVEL 1: Temporary partitions to be removed prior to final occupancy. No taping, finishing, or accessories required.

B. LEVEL 2: Concealed areas above ceiling. Joints and interior corners shall have tape embedded in joint compound. Surface shall be free of excessive joint compound. Tool marks and ridges are acceptable.

C. LEVEL 3: Water resistant gypsum board or tile backer board serving as ceramic tile substrate. Joints and interior corners shall have tape embedded in joint compound and a separate coat of joint compound applied over joints, interior corners, fastener heads, and accessories. Surface shall be free of excessive joint compound. Tool marks and ridges are acceptable.

D. LEVEL 4: Mechanical, electrical, custodial, storage, maintenance and telephone rooms. Joints and interior corners shall have tape embedded in joint compound and two separate coats of joint compound applied over all joints, interior corners, fastener heads, and accessories. Joint compound shall be smooth and free of tool marks and ridges.

E. LEVEL 5: All other drywall areas scheduled for paint, fabric, or vinyl wall covering. Joints and interior corners shall have tape embedded in joint compound and three coats of joint compound applied over all joints, interior corners, fastener heads, and accessories. Joint compound shall be smooth and free of tool marks and ridges.

END OF SECTION

SECTION 09300
TILE

PART 1 GENERAL

1.1 SECTION INCLUDES

A. Tile and Accessories:
   1. Mosaic Tile.
   2. Stone Tile.
   3. Tile Setting Materials.

1.2 REFERENCES

A. American National Standards Institute (ANSI):
   1. ANSI A108/A118/A136.1 - Specifications for the Installation of Ceramic Tile.
   2. ANSI A137.1 - Specifications for Ceramic Tile.

B. American International (ASTM):
   1. ASTM C 144 - Standard Specification for Aggregate for Masonry Mortar.
   2. ASTM C 150 - Standard Specification for Portland Cement.
   3. ASTM C 207 - Standard Specification for Hydrated Lime for Masonry Purposes.
   4. ASTM C 615 - Specification for Granite Dimension Stone.
   5. ASTM C 629 - Specification for Slate Dimension Stone.
   6. ASTM C 1028 - Standard Test Method for Determining the Static Coefficient of Friction or Ceramic Tile and Other Like Surfaces by the Horizontal Dynamometer Pull-Meter Method.

C. Tile Council of North America (TCNA): TCA Handbook for Ceramic Tile Installation, 2007.

1.3 PERFORMANCE REQUIREMENTS

A. Static Coefficient of Friction: Tile on walkway surfaces shall meet or exceed the following values as determined by testing in conformance with ASTM C 1028.
   1. Level Surfaces: Minimum of 0.6 (Wet).
   2. Step Treads: Minimum of 0.6 (Wet).
   3. Ramp Surfaces: Minimum of 0.8 (Wet).

1.4 SUBMITTALS

A. Submit under provisions of Section 01 30 00 - Administrative Requirements.

B. Product Data: Manufacturer's data sheets on each product to be used, including:
   1. Preparation instructions and recommendations.
   2. Storage and handling requirements and recommendations.
   3. Installation methods.

C. Selection Samples: For each product specified, two complete sets of color charts representing manufacturer's full range of available colors and patterns.

1.5 QUALITY ASSURANCE

A. Installer Qualifications: Company specializing in performing the work of this section with minimum two years experience.

B. Single Source Responsibility: Obtain each type and color of tile from a single source.

C. General: Provide tile that complies with ANSI A137.1 where applicable for types, compositions and other characteristics indicated. Provide tile in the locations and of the types colors and pattern indicated on the Drawings.
   1. Factory Blending: For tile exhibiting color variations within the ranges selected under Submittal of samples, blend tile in the factory and package so tile taken from one package shows the same range of colors as those taken from other packages.
   2. Mounting: For factory mounted tile, provide back or edge mounted tile assemblies as standard with the manufacturer, unless otherwise specified.

1.6 DELIVERY, STORAGE, AND HANDLING

A. Deliver and store products in manufacturer's unopened packaging until ready for installation.

B. Protect setting materials from freezing or overheating in accordance with manufacturer's instructions.

C. Store tile and setting materials on elevated platforms, under cover and in a dry location and protect from contamination, dampness, freezing or overheating.

1.7 PROJECT CONDITIONS

A. Do not install adhesives in an unventilated environment.

B. Maintain ambient and substrate temperature of 50 degrees F (10 degrees C) during tiling and for a minimum of 7 days after completion.

1.8 EXTRA MATERIALS
   1. Provide for Owner's use a minimum of 2 percent of the primary sizes and colors of tile specified, boxed and clearly labeled.

PART 2 PRODUCTS

2.1 MANUFACTURERS

A. Acceptable Manufacturer: American Olean Tile Co

B. Acceptable Manufacturer MS International Montauk Black 12 in. x 24 in

C. Requests for substitutions will be considered in accordance with provisions of Section 01 60 00 - Product Requirements.

2.2 TILE

A. Mosaic Tile:
   1. Unglazed Colorbody Porcelain Mosaics
      a. Mosaic Field Tile Size: 1 by 1 inches.
      b. Moisture Absorption: Less than 0.5 percent.
      c. Surface Finishes: Plain, Abrasive.
      d. Trim Name: Bullnose, Bullnose Corner,

B. Stone Tile:
   1. Slate & Sandstone Collection
      a. Floor Field Tile Size: 12 by 24 inches.
   2. Thresholds:
      a. Floor Size: 4 by 36 by 0.625 inches.

2.3 TILE SETTING MATERIALS

A. Tile Setting Materials: Comply with ANSI A108/A118/A136.1 as applicable to the installation methods referenced in Part 3 of this Section.

B. Patching and Leveling Compound: As recommended by tile manufacturer and compatible with both substrate and setting materials.

C. Cementitious Backer Board: High density, cementitious, glass fiber reinforced with 2 inch (50 mm) wide coated glass fiber tape for joints and corners:
   1. Thickness: 5/8 inch (16 mm).

D. Stone Thresholds: Provide stone thresholds uniform in color and finish and fabricated from the following material:
   1. Material: Slate: ASTM C 629.
   2. Color and Finish: As selected.

PART 3 EXECUTION

3.1 EXAMINATION

A. Acceptability of Surfaces: Inspect surfaces to be tiled to ensure proper bonding can be achieved, and to verify that surfaces are free of curing membranes, oil, grease, wax and dust.

B. Substrate Tolerances: Before tiling, inspect surfaces to be tiled to verify that the following tolerances are not exceeded. If tolerances are exceeded, provide specified leveling coat to achieve specified tolerances.
   1. Walls: 1/8 inch in 8 feet (3 mm in 2.4 m) for dry-set mortar, epoxy and organic adhesives.
   2. Floors: 1/8 inch in 10 feet (3 mm in 3 m) for dry-set mortar and epoxy; 1/16 inch in 3 feet (1.5 mm in 1 m) for organic adhesive.

3.2 PREPARATION

A. Layout: Determine locations of control and expansion joints before starting tile work. Layout tile work to minimize cuts less than one-half tile in size.

3.3 INSTALLATION

A. General: Comply with ANSI A108/A118/A136.1 and manufacturer's recommendations. Comply with applicable TCA Handbook for Tile Installation requirements as listed below.

B. Floors, Interior, Concrete Subfloor:
   1. TCA F111, cement mortar, cleavage membrane.
   2. TCA F112, cement mortar, bonded.
   3. TCA F113, dry-set mortar.
   4. TCA F113, latex-Portland cement mortar.
   5. TCA F114, cement mortar, epoxy grout.
   6. TCA F114, cement mortar, furan grout.
   7. TCA F115, latex-Portland cement mortar, epoxy grout.
   8. TCA F115, latex-Portland cement mortar, furan grout.
   9. TCA F116, organic adhesive.
   10. TCA F116, epoxy adhesive.
   11. TCA F200, poured gypsum underlayment, bonded.
   12. TCA F205, cementitious self leveling underlayment, bonded.

C. Walls, Interior, Wood Studs or Furring:
   1. TCA W231, cement mortar.

3.4 CLEANING AND PROTECTION

A. Cleaning: Clean tile within time period recommended by manufacturer, using materials recommended by manufacturer.

B. Protection: Prohibit foot and wheeled traffic from floors for a minimum of 3 days. Where traffic is unavoidable, provide large flat boards in walkways and wheelways for a minimum of 7 days after installation. Protect from construction dirt and debris with heavy-duty, non-staining construction paper, masked in place.
1.

END OF SECTION

SECTION 09510
ACOUSTICAL CEILINGS

PART 1 - GENERAL

1.01 SECTION INCLUDES:

A. Suspended metal grid ceiling system.

B. Acoustical units.

1.02 REFERENCES

C. ASTM C 635 - Standard Specification for the Manufacture, Performance, and Testing of Metal Suspension Systems for Acoustical Tile and Lay-in Panel Ceilings; 2000.

D. ASTM C 636 - Standard Practice for Installation of Metal Ceiling Suspension Systems for Acoustical Tile and Lay-in Panels; 2003.

E. ASTM E 580 - Standard Practice for Application of Ceiling Suspension Systems for Acoustical Tile and Lay-in Panels in Areas Requiring Seismic Restraint; 2002.

F. ASTM E 1264 - Standard Classification for Acoustical Ceiling Products; 1998.

1.03 SUBMITTALS

A. See Section 01300 - Administrative Requirements, for submittal procedures.

B. Samples: Submit two samples 6 x 6 inch in size illustrating material and finish of acoustical units.

C. Samples: Submit two samples each, 12 inches long, of suspension system main runner, cross runner, and perimeter molding.

D. Manufacturer's Installation Instructions: Indicate special procedures and perimeter conditions requiring special attention.

1.04 ENVIRONMENTAL REQUIREMENTS

A. A. Maintain uniform temperature of minimum 60 degrees F, and maximum humidity of 40 percent prior to, during, and after acoustical unit installation.

1.05 PROJECT CONDITIONS

A. Sequence work to ensure acoustical ceilings are not installed until building is enclosed, sufficient heat is provided, dust generating activities have terminated, and overhead work is completed, tested, and approved.

B. Install acoustical units after interior wet work is dry.

1.06 EXTRA MATERIALS

A. See Section 01600 - Product Requirements, for additional provisions.

B. Provide 20 sqft of each type of acoustical unit for Owner's use in maintenance of project.

PART 2 - PRODUCTS

2.01 ACOUSTICAL UNITS

A. Manufacturers:

1. Armstrong World Industries, Inc: www.armstrong.com.

2. BPB Celotex: www.bpb-na.com.
3. USG Corporation: www.usg.com.
4. Substitutions: See Section 01600 - Product Requirements.

B. Acoustical Units - General: ASTM E 1264, Class A.

C. Acoustical Panels: Typical, Interior.

5. Size: 24 x 24 inches.
6. Light Reflectance: 87 percent, determined as specified in ASTM E 1264.
7. NRC Range: 0.70 to 0.75, determined as specified in ASTM E 1264.
8. Articulation Class: 170 or greater, determined as specified in ASTM E 1264.
9. Panel Edge: Tegular.
10. Surface Pattern: Fissured.
11. Surface Color: White.
12. Product: "Fine Fissured Open Plan" Fire Rated Class A USG Frost Clima Plus #4414 Tegular Tile SLB 2 x 2 x 3/4'" ASTM 635 paper back #414 (white).
13. Suspension System: Exposed grid.

D. Locations: Ref. reflected ceiling plan on drawings and room finish schedule

2.02 SUSPENSION SYSTEM(S)

A. Manufacturers:

1. Armstrong World Industries, Inc: www.ceilings.com.
2. Chicago Metallic Corporation: www.chicagometallic.com.
3. USG Corporation: www.usg.com.
4. Substitutions: See Section 01600 - Product Requirements.

B. Suspension Systems

1. Interior: ASTM C 635; die cut and interlocking components, with stabilizer bars, clips, splices, perimeter moldings, and hold down clips as required.

C. Exposed Aluminum Suspension System: Aluminum Tees, commercial quality cold rolled; intermediate-duty with aluminum clad.

1. Profile: Tee; 15/16 inch wide face. Ref. USG DXLA Fire Rated
2. Construction: Double web.
3. Cap: Aluminum.
4. Finish: Aluminium.

2.03 ACCESSORIES

A. Support Channels and Hangers: Aluminum; size and type to suit application and ceiling system flatness requirement specified.

B. Perimeter Moldings: Same material and finish as grid.

5. At Exposed Grid: Provide L-shaped molding for mounting at same elevation as face of grid.

PART 3 - EXECUTION

3.01 EXAMINATION

A. Verify existing conditions before starting work.

B. Verify that layout of hangers will not interfere with other work.

3.02 INSTALLATION - SUSPENSION SYSTEM

A. Install suspension system in accordance with ASTM C 636, ASTM E 580, and manufacturer's instructions and as supplemented in this section.

B. Rigidly secure system, including integral mechanical and electrical components, for maximum deflection of 1:360.

C. Locate system on room axis according to reflected plan.

D. Install after major above-ceiling work is complete. Coordinate the location of hangers with other work.

E. Hang suspension system independent of walls, columns, ducts, pipes and conduit. Where carrying members are spliced, avoid visible displacement of face plane of adjacent members.

F. Where ducts or other equipment prevent the regular spacing of hangers, reinforce the nearest affected hangers and related carrying channels to span the extra distance.

G. Do not support components on main runners or cross runners if weight causes total dead load to exceed deflection capability.

H. Support fixture loads using supplementary hangers located within 6 inches of each corner, or support components independently.

I. Do not eccentrically load system or induce rotation of runners.

J. Perimeter Molding: Install at intersection of ceiling and vertical surfaces and at junctions with other interruptions.

1. Use longest practical lengths.

2. Overlap and rivet corners.

3.03 INSTALLATION - ACOUSTICAL UNITS

A. Install acoustical units in accordance with manufacturer's instructions.

B. Fit acoustical units in place, free from damaged edges or other defects detrimental to appearance and function.

C. Fit border trim neatly against abutting surfaces.

D. Install units after above-ceiling work is complete.

E. Install acoustical units level, in uniform plane, and free from twist, warp, and dents.

F. Cutting Acoustical Units:

1. Make field cut edges of same profile as factory edges.

G. Where round obstructions occur, provide preformed closures to match perimeter molding.

3.04 ERECTION TOLERANCES

A. Maximum Variation from Flat and Level Surface: 1/8 inch in 10 feet.

B. Maximum Variation from Plumb of Grid Members Caused by Eccentric Loads: 2 degrees.

END OF SECTION

SECTION 09651

RESILENT BASE

PART 1 GENERAL

1.01 SUMMARY

A. Section Includes: Resilient Wall Base

1.02 REFERENCED DOCUMENTS

B. ASTM International:

1. F 1861 Standard Specification for Resilient Wall base
2. E 84 Standard Test Method for Surface Burning Characteristics of Building Materials
3. F 386 Standard Test Method for Thickness of Resilient Flooring Materials Having Flat Surfaces
4. E 648 Standard Test Method for Critical Radiant Flux of Flooring systems Using a Radiant Energy Source.
5. E 662 Test Method for Specific Density of Smoke Generated by Solid Materials.
6. F 925 Standard Test Method for Resistance to Chemicals of Resilient Flooring.
7. F 137 Standard Test Method for Flexibility of Resilient Flooring Materials with Cylindrical Mandrel Apparatus
8. F 1515 Standard Test Method for Measuring Light Stability of Resilient Vinyl Flooring by Color Change

C. Other Referenced Documents

1. National Fire Protection Association (NFPA): NFPA 255, Test Method for Critical Radiant Flux of Floor Covering Systems Using a Radiant Energy Source
2. National Fire Protection Association (NFPA) 258 Test Method for Specific Density of Smoke Generated by Solid Materials.

1.03 SUBMITTALS

A. Product Data: Submit product data, including manufacturer's specification summary sheet for specified products

B. Shop Drawings: Submit shop drawings showing layout, finish colors, patterns and textures.

C. Samples: Submit selection and verification samples for finishes, colors, and textures.

D. Quality Assurance Submittals: Submit the following:

1. Test Reports: Certified test reports showing compliance with specified performance characteristics and physical properties.
2. Manufacturer's Instructions: Manufacturer's installation and maintenance instructions.

E. Submit the following:

1. Maintenance Data: Maintenance data for installed products in accordance with Division 1 sections. Include methods for maintaining installed products, and

precautions against cleaning materials and methods detrimental to finishes and performance.

2. Warranty: Warranty documents specified herein.

1.04 QUALITY ASSURANCE

A. Installer Qualifications: Installer experienced in performing work of this section who has specialized in installing work similar to that required for this project.

B. Single-Source Responsibility: Obtain resilient wall base and manufacturer’s recommended adhesive from a single supplier.

1.05 DELIVERY, STORAGE, AND HANDLING

A. General: Comply with requirements in Division 1.

B. Delivery: Deliver materials in manufacturer's original, unopened, undamaged containers with identification labels intact.

C. Storage and Protection: Store materials protected from exposure to harmful weather conditions and acclimated to site conditions at temperature and humidity conditions recommended by manufacturer.

1.06 PROJECT CONDITIONS

A. Environmental Requirements/Conditions: In accordance with manufacturer's recommendations, areas to receive resilient wall base shall be clean, fully enclosed, weather tight with the permanent HVAC set at a uniform temperature of 65-85 degrees F for 48 hours prior too during, and thereafter installation of resilient wall base. Resilient wall base and adhesive shall be conditioned in the same manner. Resilient wall base must be unboxed & acclimatized.

1.07 SEQUENCING AND SCHEDULING

A. Finishing Operations: Install resilient wall base after finishing operations, including floor covering painting and ceiling operations etc., have been completed.

1.08 WARRANTY

A. Manufacturer's Materials Warranty: Submit, for Owner's acceptance, manufacturer's standard warranty document. Manufacturer's warranty is in addition to, and not a limitation of, other rights Owner may have under Contract Documents.

1. Warranty Period: 1 year limited warranty commencing on Date of Substantial Completion.

1.09 MAINTENANCE

A. Extra Materials: Deliver to Owner extra materials from same production run as products installed. Package products with protective covering and identify with descriptive labels.

1. Quantity: Furnish quantity of Resilient Wall Base equal to 5% of amount installed.

2. Delivery, Storage and Protection: Comply with Owner's requirements for delivery, storage and protection of extra materials.

B. Maintenance of finished floor covering to be conducted per Manufacturer’s Maintenance Guide.

PART 2 PRODUCTS

2.01 RESILIENT WALL BASE

C. Manufacturer

1. Roppe
2. Johnsonite
3. Substitions - See Section 1600

D. Test results:

1. Thickness tolerance: Complies with ASTM F-386
2. Flexibility: Complies with ASTM F-137
3. Resistance to Heat Aging: Complies with ASTM F-1515
4. Resistance to Detergents: Complies with ASTM F-925
5. Resistance to Alkalis: No fading or softening
6. Dimensional Stability: Complies with ASTM F 1861
7. Squareness: 90 degrees +/- 0.5 degrees

E. Rubber Base

1. Complies with ASTM F-1861 Type TS (Thermoset Vulcanized Rubber), Group 1 (Solid)
2. Contains 10% natural rubber
3. Thickness: 0.80" (2.03 mm), nominal
4. Color as selected by Architect from manufacturer’s standard colors.
5. Profile - Standard Toe (Cove base)
6. Nominal Height 4"
7. Lengths: to allow for continuous run in all rooms
8. Corners - Formed by installer on site

2.02 PRODUCT SUBSTITUTIONS

A. Substitutions: See Section 1600.

PART 3 EXECUTION

3.01 MANUFACTURER'S INSTRUCTIONS

A. Compliance: Comply with manufacturer’s instructions for installation.

B. Adhesive: Manufacturer's standard Wall Base Adhesive

C. Caulking: to match base color.

3.02 EXAMINATION

A. Site Verification of Conditions: Verify substrate conditions are acceptable for installing product in accordance with manufacturer's instructions.

B. Material Inspection: In accordance with manufacturer's installing requirements, visually inspect materials prior to installing. Material with visual defects shall not be installed.

3.03 PREPARATION

A. Adjacent Surfaces Protection: Protect adjacent work areas and finish surfaces from damage during product installation.

B. Surface Preparation, General: Prepare substrate in accordance with manufacturer's instructions.

C. Substrate: Prepare manufacturer’s recommended substrates to be smooth, rigid, flat, level, permanently dry, clean and free of foreign materials such as paint, dust, grease, oils, solvent, old adhesive residue, vinyl wall coverings, non-porous surfaces and all other contaminants that may interfere with adhesive bond.

3.04 INSTALLING

A. Manufacturer’s instructions for specifications on installing resilient wall base.

B. Resilient wall base colors, heights and profiles: As selected by Architect.

C. Manufacturer's Adhesive

D. Manurfacturer's Colored Caulk

3.05 FIELD QUALITY REQUIREMENT

A. Manufacturer's Field Services: Upon Owner's request and with minimum 72 hours notice, provide manufacturer's field service consisting of product use recommendations and periodic site visits to confirm installing of product is in accordance with manufacturer's instructions.

3.06 CLEANING

A. Cleaning: Repair or replace damaged installed products. Clean installed products in accordance with manufacturer's instructions prior to owner's acceptance. Remove construction debris from project site and legally dispose of debris.

END OF SECTION

SECTION 09772

FIBERGLASS REINFORCED PANELS

1.0 GENERAL

1.01 SUMMARY

A. Section Includes: Prefinished polyester glass reinforced plastic sheets and adhered to unfinished gypsum wallboard.

1. PVC trim.

B. Products Not Furnished or Installed under This Section:

1. Gypsum substrate board.
2. Resilient Base.

1.02 RELATED SECTIONS

A. Section 09221 – Gypsum board assemblies.

B. Section 05400 - Metal Stud Framing

C. Section 09900 - Painting & Coating.

D. Section 09651 - Resilient Base.

1.03 REFERENCES

E. American Society for Testing and Materials: Standard Specifications (ASTM)

1. ASTM D 256 - Izod Impact Strengths (ft #/in)
2. ASTM D 570 - Water Absorption (%)
3. ASTM D 638 - Tensile Strengths (psi) & Tensile Modulus (psi)
4. ASTM D 790 - Flexural Strengths (psi) & Flexural Modulus (psi)
5. ASTM D 2583- Barcol Hardness
6. ASTM D 5319 - Standard Specification for Glass-Fiber Reinforced Polyester Wall and Ceiling Panels.
7. ASTM E 84 - Standard Test Method for Surface Burning Characteristics of Building Materials.

1.04 SUBMITTALS

A. Product Data: Submit sufficient manufacturer's data to indicate compliance with these specifications, including:

1. Preparation instructions and recommendations.
2. Storage and handling requirements and recommendations.
3. Installation methods.

B. Samples for Verification: Submit appropriate section of panel for each finish selected indicating the color, texture, and pattern required.

1. Submit complete with specified applied finish.
2. Exposed Molding and Trim: Provide samples of each type, finish, and color.

1.05 Manufacturers Material Safety Data Sheets (MSDS) for adhesives, sealants and other pertinent materials prior to their delivery to the site

1.06 QUALITY ASSURANCE

C. Conform to building code requirements for interior finish for smoke and flame spread requirements as tested in accordance with:

1. ASTM E 84 (Method of test for surface burning characteristics of building Materials) Wall Required Rating – Class A.

A. Sanitary Standards: System components and finishes to comply with:

1. United States Department of Agriculture (USDA) requirements for food preparation facilities, incidental contact.
2. Food and Drug Administration (FDA) 1999 Food Code 6-101.11.
3. Canadian Food Inspection Agency (CFIA) requirements.

1.07 DELIVERY, STORAGE AND HANDLING

A. Deliver materials factory packaged on strong pallets.

B. Store panels and trim lying flat, under cover and protected from the elements. Allow panels to acclimate to room temperature (70°) for 48 hours prior to installation.

1.08 PROJECT CONDITIONS

A. Environmental Limitations: Building are to be fully enclosed prior to installation with sufficient heat (70°) and ventilation consistent with good working conditions for finish work

B. During installation and for not less than 48 hours before, maintain an ambient temperature and relative humidity within limits required by type of adhesive used and recommendation of adhesive manufacturer.

1. Provide ventilation to disperse fumes during application of adhesive as recommended by the adhesive manufacturer.

1.09 WARRANTY

A. Furnish one year guarantee against defects in material and workmanship.

PART 2 - PRODUCTS

2.01 MANUFACTURERS

A. Manufacturers that meet the performance criteria.

B. Product:

1. Standard FRP

2.02 PANELS

A. Fiberglass reinforced thermosetting polyester resin panel sheets complying with ASTM D 5319.

1. Coating: Multi-layer print, primer and finish coats or applied over-layer.
2. Dimensions:

a. Thickness – 0.090" nominal

b. Width - 4'-0" nominal

c. Length –8'-0" nominal

3. Tolerance:

d. Length and Width: +/-1/8"

e. Square - Not to exceed 1/8" for 8 foot panels or 5/32" for 10 foot panels

B. Properties: Resistant to rot, corrosion, staining, denting, peeling, and splintering.

4. Flexural Strength - 1.0 x 104 psi per ASTM D 790.
5. Flexural Modulus - 3.1 x 105 psi per ASTM D 790.
6. Tensile Strength - 7.0 x 103 psi per ASTM D 638.
7. Tensile Modulus - 1.6 x 105 psi per ASTM D 638.
8. Water Absorption - 0.72% per ASTM D 570.
9. Barcol Hardness (scratch resistance) of 35 55 as per ASTM D 2583.
10. Izod Impact Strength of 72 ft. lbs./in ASTM D 256

C. Back Surface: Smooth. Imperfections which do not affect functional properties are not cause for rejection.

E. Front Finish:

1. Color: White
2. Finish: Smooth
3. Fire Rating Class A (I) Fire Rating.
4. Size: 4' x 8' x .120"

2.05 MOLDINGS

A. PVC Trim: Thin-wall semi-rigid extruded PVC.

1. Inside Corner - continuous length determined by room height. No joints allowed.
2. Division - continuous length determined by room height. No joints allowed.
3. Edge - continuous length determined by room height. No joints allowed.
4. Color: White

2.06 ACCESSORIES

A. Specify rivets for use in areas with dramatic changes in temperature and/or humidity, where the substrate is unusually uneven, and in all low temperatures or cold storage applications.

1. Match panel colors.
2. Length to suit project conditions.

C. Adhesive: Either of the following construction adhesives complying with ASTM C 557.

D. Titebond Advanced Polymer Panel Adhesive – VOC compliant, non-flammable, environmentally safe adhesive.

E. Sealant: White Silicone Sealant.

PART 3 - EXECUTION

3.1 PREPARATION

A. Examine backup surfaces to determine that corners are plumb and straight, surfaces are smooth, uniform, clean and free from foreign matter, nails countersunk, joints and cracks filled flush and smooth with the adjoining surface.

1. Verify that stud spacing does not exceed 24" on-center.

a) Repair defects prior to installation.

2. Level wall surfaces to panel manufacturer’s requirements. Remove protrusions and fill indentations.

3.2 INSTALLATION

A. Comply with manufacturer's recommended procedures and installation sequence.

B. Cut sheets to meet supports allowing 1/8" clearance for every 8 foot of panel.

1. Cut and drill with carbide tipped saw blades or drill bits, or cut with shears.

2. Pre-drill fastener holes 1/8" oversize with high speed drill bit.

a) Space at 8" maximum on center at perimeter, 1" from panel edge.

b) Space at in field in rows 16' on center, with fasteners spaced at 12" maximum on center.

C. Apply panels to board substrate, above base, vertically oriented with seams plumb and pattern aligned with adjoining panels.

1. Install panels with manufacturer's recommended gap for panel field and corner joints.

a) Adhesive trowel and application method to conform to adhesive manufacturer’s recommendations.

b) Drive fasteners for snug fit. Do not over-tighten.

D. Apply panel moldings to all panel edges using silicone sealant providing for required clearances.

1. All moldings must provide for a minimum 1/8" of panel expansion at joints and edges, to insure proper installation.

2. Apply sealant to all moldings, channels and joints between the system and different materials to assure watertight installation.

3.3 CLEANING

A. Remove excess sealant from panels and moldings. Wipe panel down using a damp cloth and mild soap solution or cleaner.

B. Refer to manufacturer's specific cleaning recommendations Do not use abrasive cleaners.

END OF SECTION

SECTION 09900

PAINTS AND COATINGS

PART 1 - GENERAL

1.01 SECTION INCLUDES

A. Surface preparation.

B. Field application of paints. Interior and Exterior

C. See Schedule - Surfaces to be Finished, at end of Section.

1.02 REFERENCES

A. ASTM D 4442 - Standard Test Methods for Direct Moisture Content Measurement of Wood and Wood-Base Materials; 1992 (Reapproved 2003).

1.03 SUBMITTALS

A. See Section 01300 - Administrative Requirements, for submittal procedures.

B. Product Data: Provide data on all finishing products.

C. Samples: Submit two painted samples, illustrating selected colors and textures for each color and system selected with specified coats cascaded. Submit on heavy white paper stock, 8 1/2 x 11 inch in size.

D. Manufacturer's Instructions: Indicate special surface preparation procedures.

E. Maintenance Data: Submit data on cleaning, touch-up, and repair of painted and coated surfaces.

1.04 QUALITY ASSURANCE

A. Manufacturer Qualifications: Company specializing in manufacturing the Products specified in this section with minimum three years documented experience.

B. Applicator Qualifications: Company specializing in performing the work of this section with minimum five years experience.

1.05 MOCK-UP

A. See Section 01400 - Quality Requirements, for general requirements for mock-up.

B. Provide panel, 8 feet long by 8 feet wide, illustrating special coating color, texture, and finish.

C. Provide door and frame assembly illustrating paint coating color, texture, and finish.

D. Locate where directed.

E. Mock-up may remain as part of the Work.

1.06 DELIVERY, STORAGE, AND PROTECTION

A. Deliver products to site in sealed and labeled containers; inspect to verify acceptability.

B. Container Label: Include manufacturer's name, type of paint, brand name, lot number, brand code, coverage, surface preparation, drying time, cleanup requirements, color designation, and instructions for mixing and reducing.

C. Paint Materials: Store at minimum ambient temperature of 45 degrees F and a maximum of 90 degrees F, in ventilated area, and as required by manufacturer's instructions.

1.07 ENVIRONMENTAL REQUIREMENTS

A. Do not apply materials when surface and ambient temperatures are outside the temperature ranges required by the paint product manufacturer.

B. Do not apply exterior coatings during rain or snow, or when relative humidity is outside the humidity ranges required by the paint product manufacturer.

C. Minimum Application Temperatures for Latex Paints: 45 degrees F for interiors; 50 degrees F for exterior; unless required otherwise by manufacturer's instructions.

D. Provide lighting level of 80 ft candles measured mid-height at substrate surface.

1.08 EXTRA MATERIALS

A. See Section 01600 - Product Requirements, for additional provisions.

B. Supply 1 gallon of each color; store where directed.

C. Label each container with color in addition to the manufacturer's label.

PART 2 - PRODUCTS

2.01 MANUFACTURERS

A. Paints:

1. ICI Paints North America: www.icipaintsinna.com.
2. Benjamin Moore & Co: www.benjaminmoore.com.
3. Sherwin-Williams: www.sherwin-williams.com.
4. Sonneborn – Elastomeric coating for concrete wall and roof panels.

B. Primer Sealers: Same as Paints.

C. Substitutions: See Section 01600 - Product Requirements.

2.02 PAINTS AND COATINGS - GENERAL

A. General: All first line products.

B. Paints and Coatings: Ready mixed, except field-catalyzed coatings. Prepare pigments:

1. To a soft paste consistency, capable of being readily and uniformly dispersed to a homogeneous coating.
2. For good flow and brushing properties.
3. Capable of drying or curing free of streaks or sags.

2.03 PAINT SYSTEMS – INTERIOR AND EXTERIOR

A. Paint GE-OP-3L - Synthetic Plaster, Opaque, Latex, 3 Coat:

1. One coat of latex primer sealer.
2. Flat: Two coats of latex.

B. Paint MgE-OP-3A - Galvanized Metals, Alkyd, 3 Coat:

1. One coat galvanize primer.
2. Gloss: Two coats of alkyd enamel.

2.04 PAINT SYSTEMS - INTERIOR

A. Paint WI-OP-3A -Wood, Opaque, Alkyd, 3 Coat:
   3. One coat alkyd primer sealer.
   4. Semi-gloss: Two coats of alkyd enamel.
B. Paint MI-OP-2A - Ferrous Metals, Primed, Alkyd, 2 Coat:
   1. Touch-up with alkyd primer.
   2. Gloss: Two coats of alkyd enamel.
C. Paint GI-OP-3LA - Gypsum Board/Plaster, Latex-Acrylic, 3 Coat:
   1. One coat of alkyd primer sealer.
   2. Semi-gloss: Two coats of latex-acrylic enamel; locations as directions.
   3. Eggshell: Two coats of latex-acrylic enamel; locations as directed.
D. Concrete Block Units – Commercial Block Filler Primer and (2) coats.
E. Interior wood siding and trim and ceilings – Total Marine Wood Finish linseed oil alkyd – 57% solids by weight satin finish (3) coats
F. Exterior wood siding and trim and ceilings - Total Marine Wood Finish linseed oil alkyd – 57% solids by weight satin finish (3) coats

2.05 ACCESSORY MATERIALS

A. Accessory Materials: Linseed oil, shellac, turpentine, paint thinners and other materials not specifically indicated but required to achieve the finishes specified; commercial quality.
B. Patching Material: Latex filler.
C. Fastener Head Cover Material: Latex filler.

PART 3 - EXECUTION

3.01 EXAMINATION

A. Verify that surfaces are ready to receive Work as instructed by the product manufacturer.
B. Examine surfaces scheduled to be finished prior to commencement of work. Report any condition that may potentially affect proper application.
C. Test shop-applied primer for compatibility with subsequent cover materials.
D. Measure moisture content of surfaces using an electronic moisture meter. Do not apply finishes unless moisture content of surfaces are below the following maximums:
   1. Plaster and Gypsum Wallboard: 12 percent.
   2. Interior Wood: 15 percent, measured in accordance with ASTM D 4442.

3.02 PREPARATION

A. Surface Appurtenances: Remove electrical plates, hardware, light fixture trim, escutcheons, and fittings prior to preparing surfaces or finishing.
B. Surfaces: Correct defects and clean surfaces which affect work of this section. Remove or repair existing coatings that exhibit surface defects.

C. Marks: Seal with shellac those which may bleed through surface finishes.

D. Impervious Surfaces: Remove mildew by scrubbing with solution of tetra-sodium phosphate and bleach. Rinse with clean water and allow surface to dry.

E. Gypsum Board Surfaces to be Painted: Fill minor defects with filler compound. Spot prime defects after repair.

F. Plaster Surfaces to be Painted: Fill hairline cracks, small holes, and imperfections with latex patching plaster. Make smooth and flush with adjacent surfaces. Wash and neutralize high alkali surfaces.

G. Galvanized Surfaces to be Painted: Remove surface contamination and oils and wash with solvent. Apply coat of etching primer.

H. Shop-Primed Steel Surfaces to be Finish Painted: Sand and scrape to remove loose primer and rust. Feather edges to make touch-up patches inconspicuous. Clean surfaces with solvent. Prime bare steel surfaces. Re-prime entire shop-primed item.

I. Metal Doors to be Painted: Prime metal door top and bottom edge surfaces.

J. Exterior concrete inspect and properly prepare all surfaces prior to installing elastomeric membrane system.

K. Interior and Exterior wood siding and trim amd ceilings to be finished. Clean surface Application temperature: 50-95°F, 0-90% relative humidity Application: Brush, or roll and tip

3.03 APPLICATION

A. Apply products in accordance with manufacturer's instructions.

B. Do not apply finishes to surfaces that are not dry. Allow applied coats to dry before next coat is applied.

C. Apply each coat to uniform appearance. Apply each coat of paint slightly darker than preceding coat unless otherwise approved.

D. Vacuum clean surfaces of loose particles. Use tack cloth to remove dust and particles just prior to applying next coat.

E. Where clear finishes are required, tint fillers to match wood. Work fillers into the grain before set. Wipe excess from surface.

3.04 FINISHING MECHANICAL AND ELECTRICAL EQUIPMENT

A. Refer to Section 15190 for schedule of color coding of equipment, duct work, and piping.

B. Remove unfinished louvers, grilles, covers, and access panels on mechanical and electrical components and paint separately.

C. Finish equipment, piping, conduit, and exposed duct work in utility areas in colors according to the color coding scheme indicated.

D. Reinstall electrical cover plates, hardware, light fixture trim, escutcheons, and fittings removed prior to finishing.

3.05 CLEANING

A. Collect waste material which may constitute a fire hazard, place in closed metal containers, and remove daily from site.

3.06 SCHEDULE - SURFACES TO BE FINISHED

A. Paint all surfaces normally included in a complete paint job, unless specifically excluded.

B. Do Not Paint or Finish the Following Items:

1. Items fully factory-finished unless specifically noted.
2. Fire rating labels, equipment serial number and capacity labels.
3. Stainless steel items.

C. Mechanical and Electrical: Use paint systems defined for the substrates to be finished.

4. Paint all insulated and exposed pipes occurring in finished areas to match background surfaces, unless otherwise indicated.
5. Paint shop-primed items occurring in finished areas.
6. Paint interior surfaces of air ducts that are visible through grilles and louvers with one coat of flat black paint to visible surfaces.
7. Paint dampers exposed behind louvers, grilles, to match face panels.

D. Paint both sides and edges of plywood backboards for electrical and telephone equipment before installing equipment.

END OF SECTION

SECTION 10140

SIGNAGE

PART 1 - GENERAL

1.01 SECTION INCLUDES

A. Raised letter aluminium signs.

B. Signs made of individual metal letters.

C. Aluminium Plate with cut letter

D. Aluminium Accessible Parking Sign

1.02 REFERENCES

E. A. ANSI/ICC A117.1 - American National Standard for Accessible and Usable Buildings and Facilities; International Code Council; 1998.

1.03 SUBMITTALS

F. See Section 01300 - Administrative Requirements, for submittal procedures.

G. Shop Drawings: Indicate sign styles, lettering font, foreground and background colors, locations, overall dimensions of each sign.

1.04 DELIVERY, STORAGE, AND PROTECTION

A. Package signs, labeled in name groups.

B. Store adhesive attachment tape at ambient room temperatures.

1.05 ENVIRONMENTAL REQUIREMENTS

A. Do not install signs when ambient temperature is lower than recommended by manufacturer.

B. Maintain this minimum temperature during and after installation of signs.

PART 2 - PRODUCTS

2.01 RAISED LETTER SIGNS

A. Raised Character Size and Style: Metal, character adhered to base material:

Basic of Design: SEATON 55325

1. Comply with applicable provisions of ANSI/ICC A117.1, including Braille.
2. Character Color: Aluminuim.
3. Background Color: Black.
4. Character Thickness: 1/8 inch.
5. Height: 5/8 inch.
6. Edges: Square.
7. Character Font: Helvetica.
8. Character Case: Upper case only.
9. Locations:

i. Men's Restoom #110, - two signs
ii. Women's Restroom #112 – two signs
iii. Restroom 105

10. Sign Content: Signs to include Room Name, and Braile.

B. ACCESSORIES

1. Exposed or Concealed fasteners.

2.02 LARGE BACK PLATE SIGNS

A. ALUMINIUM PLATE

1. Character Material and Color: Clear Annodized Aluminium.
2. Thickness: 1/4 inch.
3. Height: 24 inches
4. Width: 12 inches.
5. Edges: Square.
6. Character Font: Arial Black – M and W to be mirror images of each other.
7. Character Case: Upper case only.
8. Mounting: Stud and Spacer Mount
9. See Drawings for Sign Drawing. 4 Total Required

2.03 INDIVIDUAL LETTER SIGNS

B. Character Size and Style: Cut Metal Letters

10. Character Material and Color: Aluminium.
11. Character Thickness: 1/4 inch.
12. Height: 6 inches.
13. Edges: Square.
14. Character Font: Arial Black.
15. Character Case: Upper case only.
16. Mounting: Stud and Spacer Mount
17. See Drawings for Sign Drawing.
18. Content: ‘GALVESTON COUNTY BEACH PAVILION’

2.04 ACESSIBLE PARKING SIGN

C. Sign Charateristics

19. Size: 12" wide by 18" tall
20. Rust free .080 aluminum
21. Reflective lettering
22. Reflective background
23. Holes centered top/bottom

24. Fade resistant
25. Handicapped van accessible parking
26. Edges: Radius.

PART 3 - EXECUTION

3.01 EXAMINATION

A. Verify that substrate surfaces are ready to receive work.

3.02 INSTALLATION

A. Install in accordance with manufacturer's instructions.

B. Mounting fasteners to be stainless steel, aluminium, and hot dipped galvanized. Use fastener of same metal as sign.

C. On Individual Letter signs mount letters only in mortar joints not in masonry.

END OF SECTION

SECTION 10211

SOLID PLASTIC TOILET COMPARTMENTS

PART 1 GENERAL

1.1 SUMMARY

A. Section Includes:
1. Solid plastic toilet compartments]

B. Related Sections:
1. Division 01: Administrative, procedural, and temporary work requirements.

1.2 REFERENCES

A. ASTM International (ASTM):
1. B85 - Standard Specification for Aluminum-Alloy Die Castings.
2. B221 - Standard Specification for Aluminum and Aluminum-Alloy Extruded Bars, Rods, Wire, Profiles, and Tubes.
3. E84 - Standard Test Method for Surface Burning Characteristics of Building Materials.

B. National Fire Protection Association (NFPA) 286 - Standard Methods of Fire Tests for Evaluating Contribution of Wall and Ceiling Interior Finish to Room Fire Growth.

1.3 SYSTEM DESCRIPTION

A. Compartment Configurations:
1. Toilet partitions: Floor mounted, overhead braced.

1.4 SUBMITTALS

A. Submittals for Review:
1. Shop Drawings: Include dimensioned layout, elevations, trim, closures, and accessories.
2. Product Data: Manufacturer's descriptive data for panels, hardware, and accessories.
3. Samples: 2 x 3inch samples showing available colors.

1.5 QUALITY ASSURANCE

A. Manufacturer Qualifications: Minimum 5 years experience in manufacture of solid plastic toilet compartments with products in satisfactory use under similar service conditions.

B. Installer Qualifications: Minimum 5 years experience in work of this Section.

1.6 WARRANTIES

A. Provide manufacturer’s 25 year warranty against breakage, corrosion, and delamination under normal conditions.

PART 2 PRODUCTS

2.1 MANUFACTURERS

A. Contract Documents are based on Eclipse by Scranton Products.

(www.scrantonproducts.com)

B. Substitutions: [Under provisions of Division 01.] [Not permitted.]

2.2 MATERIALS

A. Doors, Panels and Pilasters:
1. High density polyethylene (HDPE), fabricated from extruded polymer resins, forming single thickness panel.
2. Waterproof and nonabsorbent, with self-lubricating surface, resistant to marks by pens, pencils, markers, and other writing instruments.
3. 1 inch thick with edges rounded to 1/4 inch radius.
4. Fire hazard classification: Pass NFPA 286. Class A
5. Color: To be selected from manufacturer's full color range.]

B. Aluminum Extrusions: ASTM B221, 6463-T5 alloy and temper.

C. Aluminum Die Castings: ASTM B85, A380 alloy.

D. Injection Molded Plastic: High density polyethylene.

E. Rubber: Abrasion resistant Styrene Butadiene Rubber, 65 to 80 Shore A durometer, black.

2.3 HARDWARE

A. Hinges:
1. Inswing hinges:
a. Hidden pivot type fabricated from heavy-duty cast aluminum.
b. Auto-close feature, adjustable to 15 degree open position.
c. Mounted to doors with stainless steel Torx head screws and through bolted to metal post with tamper proof Torx head sex bolts.
d. Hinge pivot point: 6 to 8 inches from edge of door; maintain sufficient clearance to water closet.
2. Outswing hinges:
a. Fabricated from extruded aluminum.
b. Auto-close feature, adjustable to 15 degree open position.
c. Surface mounted to doors with stainless steel Torx head screws and fastened to metal posts with countersunk tamper proof screws.
3. Provide for field adjustment of plus or minus 0.125 inch laterally and plus or minus 0.125 inch vertically.

B. Door Keeper:
1. 3.5 inches long, fabricated from heavy duty extruded aluminum, clear anodized finish.
2. Mount in gap between dividing panel and door.

C. Latch and Housing:
1. Heavy duty extruded aluminum.
2. Latch housing: Clear anodized finish.
3. Slide bolt and button: Black anodized finish.

D. Coat Hook/Bumper: Combination type, chrome plated Zamak.

E. Door Pulls [and Push Plates]:
1. Heavy duty extruded aluminum, clear anodized finish.
2. Single component providing door pull capability on outswing doors.

2.4 COMPONENTS

A. Doors and Dividing Panels:
   1. 62 inches high, mounted 8 to 14 inches above finished floor.
   2. Doors: 60 degree angle on two opposite edges for enhanced privacy.
   3. Dividing panels: Two modular pieces, both slotted on one edge to accept wall bracket.

B. Metal Posts: 82.75 inches high, heavy duty extruded aluminum, clear anodized finish, fastened to foot with stainless steel tamper resistant screw.

C. Hidden Shoe (Foot): One-piece molded polyethylene invisible shoe inserted into metal post and secured to metal post with stainless steel tamper resistant screw.

D. Headrail Cap and Corner Cap: One-piece molded polyethylene secured to metal post with stainless steel tamper resistant screw; adjustable to level headrail to finished floor.

*** OR ***

E. Hidden Wall Brackets: 61 inches long, heavy-duty extruded aluminum, clear anodized finish, inserted into slotted panel and fastened to panels with stainless steel tamper resistant screws.

F. Headrail: Heavy duty extruded aluminum, designer anti-grip design, clear anodized finish, fastened to headrail bracket with stainless steel tamper resistant screw and to headrail cap or corner cap with stainless steel tamper resistant screw.

G. Headrail Brackets: Heavy duty extruded aluminum, clear anodized finish, secured to wall with stainless steel tamper screws.

PART 3 EXECUTION

3.1 INSTALLATION

A. Install compartments in accordance with manufacturer's instructions and approved Shop Drawings.

B. Install rigid, straight, plumb, and level.

C. Locate bottom edge of doors and panels 9 inches above finished floor.

D. Provide uniform, maximum 3/8 inch vertical clearance at doors.

E. Not Acceptable: Evidence of cutting, drilling, or patching.

3.2 ADJUSTING

A. Adjust doors and latches to operate correctly.

END OF SECTION

SECTION 10261
CORNER GUARDS

PART 1 - GENERAL

1.01 SECTION INCLUDES:

A. Metal corner guards

1.02 SUBMITTALS

A. Product Data

B. Samples

1.03 DELIVERY, STORAGE, AND HANDLING

A. Deliver materials to the project site in manufacturer's original unopened containers with seals unbroken and labels and trademarks intact. Keep materials dry, protected from weather and damage, and stored under cover.

B. Materials shall be stored at approximately 21 degrees C 70 degrees F for at least 48 hours prior to installation.

1.04 WARRANTY

A. Provide manufacturer's standard performance guarantees or warranties that extend beyond a 1 year period.

PART 2 PRODUCTS

2.01 CORNER GUARDS

A. Aluminium

1. 2" Wing Aluminum Corner Guard, Mill Finish # 405- .080" thick

a) Corner guard units shall surface mounted type, Corner guards shall 40 inches high and mounted above baseboard.

B. TRIM, FASTENERS AND ANCHORS

2. Adhesive for each specific installation.

1. Submit samples indicating color and texture of materials requiring color and finish.

C. ADHESIVES

1. Adhesive for material shall be in accordance with manufacturers recommendations.

PART 3 EXECUTION

3.01 INSTALLATION

A. Corner Guards

1. Mount guards on external corners of interior walls, partitions as shown.

2. Where corner guards are installed on gypsum board, clean surfaces and anchor guards with a neoprene solvent-type contact adhesive specifically manufactured for use on gypsum board construction. Remove excess adhesive from the guard edges and allow to cure undisturbed for 24 hours.

END OF SECTION

SECTION 10280

TOILET ROOM ACCESSORIES

CONDITIONS OF THE CONTRACT AND DIVISION 1, as indexed, apply to this Section.

PART 1 - GENERAL

1.1 SUBSTITUTION

Refer to Section 01630 Substitutions for substitutions.

1.2 SCOPE

A. Furnish all labor, materials, equipment and services necessary or incidental to completion of toilet room accessories listed below in the item list.:

1.3 SUBMITTALS

A. Comply with Section 01300.
B. Shop Drawings: Indicate size, material and finish. Show locations, installation procedures. Include details of joints, attachments, fasteners, clearances, and mounting heights and compliance with ADA.
C. Product Data: Submit manufacturer's technical data and installation instructions. Rough in for most accessories is complete, therefore any substitutions of Bobrick must be the exact same size for rough-in.
D. Operation and Maintenance Instructions: Provide printed or written instructions for operation and maintenance of units specified.

1.4 MINIMUM COMPLIANCE STANDARDS

Comply with ANSI A117.1

PART 2 – PRODUCTS

2.1 MATERIALS

A. Stainless Steel:
  01 Alloy: AISI, Type 302 or 304 or 316 (18-08) ASTM A167
  02 Finish: No. 4 satin, unless otherwise specified
  03 Thickness: US Stainless 22 gauge minimum
B. Aluminum:
  01 Extruded: 6463-T5 alloy, anodized
  02 Cast: 356 or 356-T6 alloy
C. Chromium Plating:
  01 Method: Over nickel
  02 Standard: ASTM C456, Type SC 2
D. Brass:
  01 Cast or forged
  02 QQ-B-626C
E. Mirrors: (Framed)
  01 Standard: FS DD-G-451-C, silvering quality No. 1 float or plate
  02 Thickness: 1/4 inch
  03 Backing: Electrolytic cooper
  04 Protection: Padding and filler strips

2.2 MANUFACTURERS
- A. Bobrick Dispensers, Inc.
- B. Bradley Washfountain Co.
- C. American Specialties

2.3 QUALITY STANDARDS
- A. Design, finish and keying of items shall be the same.
- B. Furnish items from one manufacturer only, unless otherwise specified or directed by Architect.

PART 3 - EXECUTION

3.1 MOUNTING LOCATIONS
- A. Refer to drawings for mounting locations. When not shown, submit supplier's recommendations for locations and mounting height before proceeding.
- B. Contractor shall be responsible for supplying all opening, blocking, and other components necessary for installation of all toilet accessories.
- C. Use approved theft-resistant type fasteners.
- D. Comply with ADA requirements.

PART 4 - SCHEDULES

4.1 Manufacturers are approved but must provide equivalent products to those listed.

GB36	Grab Bar - 1 1/4" diameter concealed mounting model 3100 - Type 1 - 36" long
GB48	Grab Bar - 1 1/4" diameter concealed mounting model 3100 - Type 1 - 48" long
MR1	Frameless Mirror 18"W x 36"H –American Specialties 600-1830-C
MR2	Frameless Mirror 18"W x 36"H - American Specialties 600-1830
PTD	B-4369 ConturaSeries® Recessed Paper Towel Dispenser/Waste Receptacle with TowelMate and LinerMate
SD	Bobrick – 818615 ConturaSeries® Heavy-Duty Surface-Mounted Soap Dispenser
SND	Bobrick B-270 ConturaSeries® Surface-Mounted Sanitary Napkin Disposal
TPH	Bobrick B-2890 Single Jumbo-Roll Surface-Mounted Toilet Tissue Dispenser
TPH1	Surface Mounted Toilet Paper Holder – American Specialties model 20030

END OF SECTION

SECTION 10512

SOLID PLASTIC LOCKERS

PART 1 GENERAL

1.1 SUMMARY

A. Section includes:
   1. Solid plastic lockers and locker benches.

B. Related Sections:
   1. Division 01: Administrative, procedural, and temporary work requirements.
   2. Division 06: Rough carpentry.

C. References
   1. UL – GREENGUARD certified low emitting materials.
   2. ASTM - B221 - Standard Specification for Aluminum and Aluminum-Alloy Extruded Bars, Rods, Wire, Profiles, and Tubes.
   3. ASTM – A167 - Standard Specification for Stainless and Heat-Resisting Chromium-Nickel Steel Plate, Sheet, and Strip.

1.2 SUBMITTALS

A. Submittals for Review:
   1. Shop Drawings: Include dimensioned layouts, elevations, trim, closures and accessories.
   2. Product Data: Manufacturer's descriptive data
   3. Samples: 3 x 3 inch samples showing available colors.

1.3 QUALITY ASSURANCE

A. Manufacturer Qualifications: Minimum 5 years of experience in manufacture of solid plastic lockers with products in satisfactory use under similar service conditions.

B. Installer Qualifications: Minimum 5 years of experience in work of this Section. [Certified installer through manufacturer's installation certification program].

1.4 DELIVERY, STORAGE, AND HANDLING

A. Store in an upright condition. Protect plastic lockers from exposure to direct sunlight. This product is not intended for outdoor use.

1.5. WARRANTY

A. Provide manufacturer's 25 year warranty against breakage, corrosion, and delamination under normal conditions.

PART 2 PRODUCTS

2.1 MANUFACTURERS

A. Contract documents are based on products by Scranton Products. (www.scrantonproducts.com)

B. Substitutions: [Under provisions of Division 01.] [Not permitted.]

C. Materials
1. High Density Polyethylene (HDPE): polyethylene thermoplastic formed into solid plastic components with homogeneous color throughout, with smooth orange peel finish.
2. Heavy Duty Extruded Aluminum: B221, 6063-T6
3. Chromium Plated Steel: A167
5. Color To be selected from manufacturer's color range.

2.2 STANDARD PLASTIC LOCKERS

A. Locker Configuration [Three tier] [Six Tier]
B. Locker Dimensions:
1. Height, Nominal: [72 inch]
2. Width: [15 inch]
3. Depth: [15 inch]

C. Material: High density polyethylene (HDPE) plastic, [100 percent post-consumer recycled material].

D. Sides, Tops, Bottoms, Backs, and Shelves: 3/8 inch thick HDPE plastic, grey finish.
1. Sides: 3/8 inch thick HDPE plastic, grey finish

E. Locker Tops Flat top finished in same color as locker door

F. Doors and Frame: ½ inch thick HDPE plastic
1. Doors: ½ inch thick HDPE plastic [[with lattice mesh venting] [with full lattice mesh venting]
2. Handle: ADA compliant ergonomic handle, injection molded plastic
3. Locks digilock 9 Willowbrook Court Petaluma, CA 94954 United States of America +1 707 766 6000– Classic Cam Keypad locks operate with an alphanumeric keypad interface. The interface also contains a key slot to operate locks with an ADA compliant User Key. Provide key management system with user, manager and programming keys . Key Quantities: User I per Locker, Manager 5, Programming 5. Provide ADA compliant handles.
4. Hinge: Heavy duty extruded aluminum with corrosion free stainless steel pin with [silver] [black] finish.
6. ADA Compliance Package: 3134 aluminum Series 1100, H18, satin matte finish, adjustable 3/8 inch HDPE plastic shelf with plastic clips
7. Latch Bar: 3/8 inch thick HDPE plastic with multiple latch points, fastened with stainless steel tamper-resistant screws

G. Assembly profile: Full height of lockers, PVC plastic, snap fit assembled onto locker sides.

H. Accessories

1. Coat hook: Two-prong, high impact plastic, black finish, mounted to bottom of shelf or divider, one per door opening.
3. Filler Panels and Trim: ½ inch thick HDPE plastic, color and finish same as locker door
4. Number Plate: 3134 aluminum, Series 1100, H18, satin matte finish, fastened to locker with corrosion resistant stainless steel rivets
6. Wall hook: [one] per door opening on 24: h lockers.
8. Color: As selected by Architect from manufacturer's color range.

2.3 LOCKER BENCHES
A. Bench Tops: 1-1/2 inch thick HDPE with edges rounded to ¼ inch radius, 9-1/2 inches wide x 42 inches long.
B. Pedestals: Aluminum, 16 inches high, secured to bench tops with stainless steel tamper resistant Torx head screws and secured to the floor with lead expansion shields and 2 inch long stainless steel machine bolts.

2.4 FABRICATION

A. Fabricate locker components square and rigid; finish free from scratches and chips.

B. Fabricate locker components for snap-together assembly or slide-together dovetail connections providing solid and secure, anti-racking construction.

C. Fabricate adjacent lockers with common side panel.

D. Fabricate locker units for assembly in maximum of three adjacent lockers.

E. Fabricate locker benches to sizes indicated in single lengths.

PART 3 EXECUTION

3.1 INSTALLATION

A. Install lockers in accordance with manufacturer's instructions and approved Shop Drawings.

B. [Set lockers directly on floor.] [Set lockers on prepared locker base].

C. Set plumb, level, rigid, and aligned.

D. Attach lockers to supporting construction with anchors best suited to substrate conditions.

E. Attach locker benches to floor.

3.2 ADJUSTING

A. Adjust doors and latches to operate correctly.

END OF SECTION

SECTION 10544

FIRE PROTECTION SPECIALITIES

PART 1 - GENERAL

1.01 SECTION INCLUDES

A. Fire extinguishers.

B. Accessories.

1.02 REFERENCES

A. UL (FPED) - Fire Protection Equipment Directory; Underwriters Laboratories Inc.; current edition.

1.03 PERFORMANCE REQUIREMENTS

A. Provide extinguishers classified and labeled by Underwriters Laboratories Inc. for the purpose specified and indicated.

1.04 SUBMITTALS

A. See Section 01300 - Administrative Requirements, for submittal procedures.

B. Shop Drawings: Indicate cabinet physical dimensions.

C. Product Data: Provide extinguisher operational features.

D. Maintenance Data: Include test, refill or recharge schedules and re-certification requirements.

1.05 ENVIRONMENTAL REQUIREMENTS

A. Do not install extinguishers when ambient temperature may cause freezing of extinguisher ingredients.

PART 2 - PRODUCTS

2.01 MANUFACTURERS

A. Fire Extinguishers, Cabinets and Accessories:

1. JL Industries, Inc: www.jlindustries.com.
2. Larsen's Manufacturing Co: www.larsensmfg.com.
3. Potter-Roemer: www.potterroemer.com.
4. Substitutions: See Section 01600 - Product Requirements.

2.02 FIRE EXTINGUISHERS

A. Dry Chemical Type: Cast steel tank, with pressure gage.

1. Size and classification as scheduled.
2. Finish: Baked enamel, red color.

2.03 ACCESSORIES

A. Extinguisher Brackets: Formed steel, galvanized and enamel finished.

PART 3 - EXECUTION

3.01 EXAMINATION

A. Verify existing conditions before starting work.

B. Verify rough openings for cabinet are correctly sized and located.

3.02 INSTALLATION

A. Install in accordance with manufacturer's instructions.

B. Install cabinets plumb and level in wall openings, 48 inches from finished floor to top of extinguisher inside cabinet.

C. Secure rigidly in place.

D. Place extinguishers in cabinets.

3.03 SCHEDULES

A. Refer to drawings for scheduled locations.

1. FE: Fire Extinguisher only

B. Extinguishers: 3A-40B:C, 6 lb. capacity, typical all FEC and FE locations, and (1) Class K wet chemical extinguisher tagged-rechargeable UL Rating 1A:K

C. Brackets: Provide optional steel bracket that supports bottom of extinguisher and has two restraining cables or springs at all FE locations.

END OF SECTION

SECTION 10750

FLAG POLES

PART 1 GENERAL

1.1 SECTIONS INCLUDES

A. Materials, fabrications and installation for, aluminum flagpoles.

1.2 RELATED SECTIONS

A. Section 03 10 00 - Concrete Forming and Accessories.

B. Section 03 30 00- Cast-in-Place Concrete.

1.3 REFERENCES

A. The Aluminum Association (AA)

1) DAF 45, Designation System for Aluminum Finishes.

B. American Society for Testing and Materials International (ASTM)

1) ASTM B241/B241M , Standard Specification for Aluminum and Aluminum - Alloy Seamless Pipe and Seamless Extruded Pipe.

1.4 DESIGN REQUIREMENTS

A. Flagpole, bases and anchorage devices to resist minimum wind velocity of 150 miles/h unflagged, 100 miles/h flagged.

1.5 SUBMITTALS

A. Submit manufacturer's technical data and installation instructions for each type of flagpole.

B. Indicate dimensions, finishes, base jointing, anchoring and support systems, cleats, halyard boxes, trucks, finials, and base collar for flagpoles.

C. Submit Shop Drawings of flagpoles and bases, showing general layout, jointing and complete anchoring and supporting systems.

1.6 QUALITY ASSURANCE

A. Provide each flagpole as complete unit produced by single manufacturer, including fittings, accessories, bases and anchorage devices.

1.7 DELIVERY AND STORAGE

A. Deliver, store, handle and protect materials in accordance with Section 01 61 00 - Common Product Requirements.

B. Spiral wrap each flagpole with heavy kraft paper, wood strip and steel band, or polyethylene wrap and pack in tubing for shipment.

PART 2 PRODUCTS

2.1 MATERIALS

A. Aluminum: Aluminum Association alloy AA 6063-T5 seamless extruded aluminum tubing.

B. Isolation coating: alkali-resistant bituminous paint or epoxy resin solution.

2.2 FABRICATION

A. Supply 25 feet long flagpole as complete unit including base, mounting brackets, anchorage and fittings.

B. Cone tapered flagpole:

1) Seamless, uniform, straight line tapered section above cylindrical butt section.
2) Taper: 25 mm of run.
3) Provide internal splicing, self-aligning sleeve of same material as flagpole for snug fitting, watertight field joints.

C. Do welding to appropriate CSA Standards by welders certified by Canadian Welding Bureau. Finish exposed welds flush and smooth.

2.3 ACCESSORIES

A. Finial: 150 mm diameter ball of 1.6 mm minimum thick, aluminum, anodized to match flagpole finish.

B. Truck assembly: cast aluminum, stainless steel ballbearing, nonfouling, revolving double truck assembly, finish to match flagpole.

C. Cleats: 230 mm size, two per halyard, cast aluminum, finish to match flagpole.

D. Halyard: internal, two continuous halyards per flagpole; 10 mm (No. 12) polypropylene, braided white cotton. Retaining loop and weights for internal halyard, stainless steel.

E. Swivel snaps: two per halyard; aluminum with neoprene or vinyl covers.

F. Cleat box: one per cleat; cast aluminum, finish to match flagpole. Furnish hasp for padlock, hinged cover, and tamperproof screws. Include lockable cleat box.

2.4 FINISHES

A. Finish exposed surfaces of aluminum components in accordance with Aluminum Association Designation System for Aluminum Finishes.

Clear anodic finish: designation AA-M32, C22, A41.

B. Appearance and properties of anodized finishes designated by the Aluminum Association as Architectural Class 1.

2.5 FIELD FABRICATION

A. Fabricate ground-set foundation assembly for sleeve installation of flagpole as recommended by Flagpole manufacturer for wind loads as indicated.

PART 3 EXECUTION

3.1 INSTALLATION

A. Shop apply isolation coating to metal surfaces of flagpole and base that will be encased in concrete.

B. Install flagpoles, base assemblies and fittings to shop drawings and manufacturer's instructions.

C. Provide lightning rods for grounding of each flagpole installation.

3.2 COMMISSIONING

A. Check and adjust installed fittings for smooth operation of halyards, and instruct Owner on adjustment and maintenance procedures.

END OF SECTION

SECTION 10820

LOUVERED EQUIPMENT SCREENS

PART 1 - GENERAL

1.1 SUMMARY

A. Section Includes:

1. Fixed, extruded-aluminum louvered roof top equipment screens

B. See Division 5 Section "Structural Metal Framing" for structural framing supporting louver sections.

1.2 PERFORMANCE REQUIREMENTS

A. Design: Design louvers, including comprehensive engineering analysis by a qualified engineer, using structural performance requirements and design criteria indicated.

B. Structural Performance: Louvers shall withstand the effects of gravity loads and the following loads and stresses within limits and under conditions indicated without permanent deformation of louver components, noise or metal fatigue caused by louver blade rattle or flutter, or permanent damage to fasteners and anchors.

1. Wind Loads: Design to resist positive and negative wind load 150 mph without damage or permanent deformation.

1.3 SUBMITTALS

A. Product Data: For each type of product indicated.

B. Shop Drawings: For equipment screens and accessories. Include plans, elevations, sections, details, and attachments to other work. Show frame profiles and blade profiles, angles, and spacing.

C. Samples: For each type of metal finish required.

D. Submittal: For louvers indicated to comply with structural performance requirements and design criteria indicated.

PART 2 - PRODUCTS

2.1 MATERIALS

A. Aluminum Extrusions: ASTM B 221M, Alloy 6063-T5.

B. Aluminum Sheet: ASTM B 209M, Alloy 3003 with temper as required for forming.

C. Fasteners: Use types and sizes to suit unit installation conditions.

1. For fastening aluminum, use aluminum or 300 series stainless-steel fasteners.

2.2 FABRICATION, GENERAL

A. Join concealed frame members to each other and to fixed louver blades with fillet welds concealed from view welds, threaded fasteners, or both, as standard with louver manufacturer unless otherwise indicated or size of louver assembly makes bolted connections between frame members necessary.

2.3 EXTRUDED-ALUMINUM ROOF TOP EQUIPMENT SCREEN

A. Horizontal Blade Louvered Roof Top Equipment Screen

1. Basis-of-Design Product: Architectural Louvers Co. (Harray, LLC); Model V4JS. Subject to compliance with requirements, provide the specified product or comparable product by one of the following:
   a. Manufacturers of equivalent products submitted and approved in accordance with Section 01630 - Product Substitution Procedures.

2. Louver Blade Depth: 4 inches (100 mm)
3. Blade Profile: Plain blade without center baffle.
4. Blade Nominal Thickness: Not less than 0.080 inch (2.03 mm).
5. Framing Support Nominal Thickness: Not less than 0.125 inch (3.2 mm)
6. Louver Performance Requirements:
   a. Free Area: Not less than 8.0 sq. ft. (0.74 sq. m) for 48-inch- (1220-mm-) wide by 48-inch- (1220-mm-) high louver assembly.
   b. Horizontal Drag Coefficient: Not greater than 0.63 on a cross sectional profile, allowing for a 37% reduction in wind load imposed horizontally upon supporting structural framing.

2.4 ALUMINUM FINISHES

1. Finish: Clear Anodized Aluminum.

PART 3 - EXECUTION

3.1 INSTALLATION

A. Locate and place equipment screens level, plumb, and at indicated alignment with adjacent work.

B. Use concealed anchorages where possible. Provide brass or lead washers fitted to screws where required to protect metal surfaces and to make a weather-tight connection.

C. Provide perimeter reveals and openings of uniform width to allow for thermal expansion, as indicated.

D. Repair damaged finishes so no evidence remains of corrective work. Return items that cannot be refinished in the field to the factory and refinish entire unit or provide new units.

END OF SECTION 10820

SECTION 11450

RESIDENTIAL EQUIPMENT

PART 1 - GENERAL

1.1 SUMMARY

A. This Section includes:

1. Refrigerator.

2. Counter Top Microwave

1.2 SUBMITTALS

A. Product data. Unless otherwise indicated, submit the following for each type of product provided under work of this Section:

1. Manufacturers Product Information:

.

B. Documentation of manufacturer's Warranty for each type of equipment.

PART 2 - PRODUCTS

A. Basis of Design Summit Appliance Division, Felix Storch, Inc. Garrison Ave • Bronx, NY

1. Refrigerator

a. Under counter ADA compliant Model: AL54CSS#

2. Counter Top Microwave:

1 a. Model: SCM1000SS

Stainless Steel Exterior and Interior

Voltage (V): 115

Watts (w): 1000 min

90 day Manufacturers Warranty

PART 3 - EXECUTION

A. INSTALLATION

1. Install residential equipment, remove protective coverings, plug in, verify equipment is operational.

END OF SECTION

SECTION 12210

HORIZONTAL LOUVER BLINDS

PART 1 – GENERAL

1.01 SUMMARY

A. SUPPLIER: Furnish and install 1” Mini Horizontal Aluminum Blinds.

B. RELATED WORK SPECIFIED ELSEWHERE:

1. Section 06100: Rough Carpentry
2. Section 08520: Aluminum Windows

1.02 SUBMITTALS

A. PRODUCT DATA: Manufacturer’s descriptive literature shall be submitted indicating materials, finishes, construction and installation instructions and verifying that product meets requirements specified. Manufacturers recommendations for maintenance and cleaning shall be included.

B. SAMPLE: Provide color and finish ring of available colors and finishes.

1.03 QUALITY ASSURANCE:

A. Supplier: Manufacturer, subsidiary or licensed agent shall be approved to supply the products specified, and to honor any claims against product presented in accordance with warranty.

B. INSTALLER: Installer or agent shall be qualified to install specified products by prior experience, demonstrated performance and acceptance of requirements of manufacturer, subsidiary, or licensed agent. Installer shall be responsible for an acceptable installation.

C. UNIFORMITY: Provide 1” Mini Horizontal Aluminum Blinds of only one manufacturer for entire project.

1.04 DELIVERY, STORAGE AND HANDLING:

A. Product shall be delivered to site in manufacturer’s original packaging.

B. Product shall be handled and stored to prevent damage to materials, finishes and operating mechanisms.

1.05 JOB CONDITIONS:

A. Prior to shade installation, building shall be enclosed.

B. Interior temperature shall be maintained between 60° F. and 90° F. during and after installation; relative humidity shall not exceed 80%. Wet work shall be complete and dry.

1.06 WARRANTY:

A. Lifetime warranty.

PART 2 – PRODUCTS

2.01 ACCEPTABLE MANUFACTURER

A. Hunter Douglas

B. Graber Industries, Inc.

C. Architectural Products Division, Levelor Lorentzen, Inc.

D. Product substitutions - See Section 1600.

2.02 1” MINI HORIZONTAL ALUMINUM BLINDS

A. MATERIALS:

1. SLATS: 1” wide x .008” thick, heat-treated and spring tempered (except 5000 series alloy on metallized finishes) aluminum alloy 6011 with eased corners and manufacturing burrs removed. Furnish not less than nominal 15.2 slats per foot to ensure tight closure and light control. Finish with manufacturer’s standard baked-on finish in colors selected by architect from manufacturer’s available colors.
2. SLAT SUPPORT: Braided ladders of 100% polyester yarn color compatible with slats and spacing of ladder no more than 20mm.
3. HEADRAIL: U-shaped profile with rolled edges, measuring 1” x 1” x .024” constructed of corrosion resistant steel. Internally fit with components required for specified performance and designed for smooth, quiet, trouble-free operation. Headrail finish to be standard baked-on polyester and to match slats. Ends fitted with .024” steel end lock with adjustable tab for centering blinds.
4. BOTTOM RAIL: Steel, with corrosion-resistant finish formed with double-lock seam into closed oval shape for optimum beam and torsional strength. Ends fitted with color-coordinated engineered polymer caps. Color-coordinated engineered polymer tape buttons secure the ladder and cord. Bottom Rail finish to be standard baked-on polyester color coordinated to slats.
5. LIFTING MECHANISM: Crashproof cordlock in engineering polymer housing with nickel-plate die-cast bearing surface and brass locking clips, two-ply polyester cord filler in braided polyester jacket lift cords, cord equalizers, cordlock adapter, and Cord Stop/Single Pull Cord. Located on either side of individual blind unit as per architect’s request.
6. TILTING MECHANISM: Permanently lubricated die-cast worm and gear type tilter gear mechanism in fully enclosed housing with clutch action to protect ladder tapes from over rotation of the solid steel, corrosion resistant tilt rod.
7. TILT CONTROL WAND: Tubular construction 9/32” diameter extruded clear acrylic hexagonal, and detachable without tools. Located on either side of individual blind unit as per architect’s request.
8. MOUNTING HARDWARE: Manufacturer’s standard .040” steel box brackets with baked-on polyester finish to match headrail with additional support brackets for blinds over 60” wide.

2.03 FABRICATION

A. Blind measurements shall be accurate to within + 1/8” .

2.04 FINISHES

A. SLAT finish selection from the Manufacturer's Full Line.

B. SLAT SUPPORT braided ladders shall be color coordinated with slat .

PART 3 - EXECUTION

3.01 INSPECTION:

A. SUBCONTRACTOR shall be responsible for inspection on site, approval of mounting surfaces, installation conditions and field measurement for this work.

3.02 INSTALLATION:

A. INSTALLATION shall comply with manufacturer's specifications, standards and procedures as detailed on contract drawings.

B. ADEQUATE CLEARANCE shall be provided to permit unencumbered operation of shade and hardware.

C. CLEAN finish installation of dirt and finger marks. Leave work area clean and free of debris.

3.03 SCHEDULE:

A. EXTERIOR WINDOWS: TYPE B AND TYPE C

END OF SECTION

SECTION 12310

Manufactured Shelving

PART 1 - GENERAL

1.01 DESCRIPTION

A. This section specifies shelving units.

1.02 SUBMITTALS

A. Submit in accordance with Section 01300, Submittals.

B. Manufacturer's Literature and Data:

1. Brochures showing name and address of manufacturer, and catalog or model number of each item incorporated into the work.

PART 2 - PRODUCTS

2.01 Metal Shelving Unit:

A. Uline. Model H 3588

B. Or Approved Equal.

2.02 Materials

A. Frame:

1. Chemical-resistant HDPE.

B. Shelves:

1. Chemical-resistant HDPE

2. Shelves hold, up to 340 lbs. per shelf and 1360 lbs. per stationary unit

2.03 ACCESSORIES

1. Wall Anchoring: Provide Wall anchoring to resist a lateral force of 200 lbs.

2.04 Product Schedule

A. SHV-01: 24" deep x 4' long by 75" high. 4 shelves

PART 3 - EXECUTION

3.01 COORDINATION

A. Before installing unit, verify wall and floor surfaces covered by unit have been finished.

B. Verify reinforcement of walls and partitions for support and anchorage of shelving.

3.02 FASTENINGS AND ANCHORAGE

A. Use 6 mm (1/4 inch) diameter toggle or expansion bolts, or other appropriate size and type fastening device for securing casework to walls. Use expansion bolts shields having holding power beyond tensile and shear strength of bolt and breaking strength of bolt head.

3.03 PROTECTION TO FIXTURES, MATERIALS, AND EQUIPMENT

A. Thoroughly clean interior and exterior of units, at completion of all work.

END OF SECTION

SECTION 12705

FURNITURE

PART 1 GENERAL

1.1 REFERENCES

The publications listed below form a part of this specification to the extent referenced. The publications are referred to in the text by the basic designation only.
AMERICAN NATIONAL STANDARDS INSTITUTE (ANSI)
ANSI Z97.1 (1984; R 1994) Safety Performance Specifications and Methods of Test for Safety Glazing Materials Used in Buildings
AMERICAN SOCIETY FOR TESTING AND MATERIALS (ASTM)
ASTM E 84 (2000a) Surface Burning Characteristics of Building Materials
ASTM E 290 (1997a) Bend Testing of Material for Ductility
NATIONAL FIRE PROTECTION ASSOCIATION (NFPA)
NFPA 101 (2000) Life Safety Code
NFPA 255 (2000) Method of Test of Surface Burning Characteristics of Building Materials
UNDERWRITERS LABORATORIES (UL)
UL 723 (1996; Rev thru Dec 1998) Test for Surface Burning Characteristics of Building Materials

1.2 GENERAL

This specification establishes the minimum requirements for the acquisition and installation of a complete and usable system of furniture and accessories. Furniture requirements and configurations shall be in accordance with the description specified herein. Furniture shall be provided by a single manufacturer and shall be a standard product as shown in the most recent published price lists or amendments. This specification may include items which are not manufactured by the furniture manufacturer; any such items shall be furnished by the Contractor under this section.

1.3 SUBMITTALS

Product Data

Installation Instructions:
Manufacturer's product and construction specifications which provide technical data for furniture system and components specified, including task lighting and illumination performance information. Literature shall include adequate information to verify that the proposed product meets the specification.

Warranty:
Two copies of the warranty.

Samples:
Two sets of the following finish samples.

a. Plastic Laminate

Operation and Maintenance Data
Product Assembly Manual
One set of assembly manuals describing assembly procedures.

Product Maintenance Manuals:
One set of maintenance manuals describing proper cleaning and minor repair procedures.

1.4 DELIVERY, STORAGE, AND HANDLING

Components shall be delivered to the jobsite in the manufacturer's original packaging with the brand, item identification, and project reference clearly marked thereon. Components shall be stored in a dry location that is adequately ventilated and free from dirt and dust, water, and other contaminants, and in a manner that permits easy access for inspection and handling.

1.5 PATTERN AND COLOR

Pattern and color of laminate, wood, and metal finishes shall be selected from manufacturer’s full line including all options.

1.7 WARRANTY

The Contractor shall warrant the furniture systems for a period of 5 years Warranties shall be signed by the authorized representative of the manufacturer. Warranties accompanied by document authenticating the signer as an authorized representative of the guarantor, shall be presented to the Contracting Officer upon the completion of the project. The Contractor shall guarantee that the workstation products and installation are free from any defects in material and workmanship from the date of delivery.

PART 2 PRODUCTS

2.1 MANUFACTURERS

A. Acceptable manufacturers:
   a. Herman Miller
   b. Midmark
   c. Or approved equal

2.1.1 PERFORMANCE AND SAFETY REQUIREMENTS

Furniture shall meet testing as specified. ISO 9001 certified manufacturers may perform in-house testing. Manufacturers not ISO 9001 qualified shall be required to produce testing by an independent testing laboratory. Component specific requirements are listed in appropriate paragraphs.

2.1.2 Fire Safety

Components shall meet requirements for flame spread and smoke development as specified by NFPA 101 except as follows. Testing shall have been conducted in accordance with either ASTM E 84, UL 723, or NFPA 255 on the entire assembly.

2.1.4 General Safety

Products shall be free of rough or sharp edges.

2.3 Furniture

A. Medical Treatment Table
   a. Basis of Design: Ritter 203-002 Treatment Table
   b. Chair materials - plastic.
      i. Finishes
         Selected from Manufacturers full line.
         Include Optional Lockable Casters

B. Stackable Chairs
   a. Basis of Design: Herman Miller Magis Chair First Outdoor
   b. Chair materials - plastic.
      i. Finishes
         Finish for plastic shall be natural.

C. Service Chairs
   a. Basis of Design: Herman Miller Celle® Chair
   b. Chair materials – plastic and fabric
      i. Finishes
         Selected from Manufacturers full line.

D. Desk
   a. Basis of Design: Herman Miller Celle® Chair
   b. Chair materials – plastic and fabric
      i. Finishes
         Selected from Manufacturers full line.

2.4 Schedule of furniture

Medical Exam Table (1)
Stackable Chairs (12)
Service Chairs (6)

PART 3 EXECUTION

3.1 INSTALLATION

The furniture shall be installed by certified installers in accordance with manufacturer's recommended installation instructions. Furniture components shall be installed level, plumb, square, and with proper alignment with adjoining furniture. The components shall be securely interconnected and securely attached to the building where required.

3.2 CLEANING

Upon completion of installation, all products shall be cleaned and polished and the area shall be left in a clean and neat condition. Any defects in material and installation shall be repaired, and damaged products that cannot be satisfactorily repaired shall be replaced.

END OF SECTION

SECTION 12932

TRASH AND LITTER RECEPTORS

Part 1 General

1.01 Summary

A. Section Includes:

1. 45-gallon, single-stream, cast aluminum litter/recycling receptacles with one 45-gallon liner.

1.02 Submittals

A. Provide submittals in accordance with Section 01 33 00 – Submittal Procedures.

B. Product data:

1. Manufacturer's standard product literature.
2. Shop drawings.
3. Installation instructions.
4. Maintenance instructions.

C. Submit powdercoat finish samples for approval.

1.03 Quality Assurance

A. Manufacturer Qualifications:

1. Minimum 15 years experience in the manufacture of litter and recycling receptacles for public spaces.
2. Provide reference list of at least ten major transportation authorities, municipalities, universities, or other high-use public environments currently using litter and recycling receptacles fabricated by the manufacturer.

1.04 Delivery, Storage and Handling

A. Handle products in accordance with manufacturer's instructions.

B. Store products in manufacturer's original packaging until ready for installation.

C. Protect products from impacts and abrasion during storage.

1.05 Warranty

A. Provide manufacturer's standard warranty:

1. Warranty terms: one year from date of invoice against defects in materials and workmanship.

Part 2 Products

2.01 Manufacturer

B. Basis-of-design product: provide cast aluminum litter and recycling receptacles based on the product named:

1. Dispatch Litter and Recycling Receptacle by Forms+Surfaces.
2. Manufacturer Contact:
   Forms+Surfaces
   30 Pine Street
   Pittsburgh, PA 15223
   phone: 800-451-0410

fax: 412-781-7840
email: sales@forms-surfaces.com
website: www.forms-surfaces.com

B. Overall Dimensions
   1. 45-gallon receptacles: 45.3" high x 26.8" wide x 22.9" deep.

C. Configuration Option
   1. 45-gallon, single-stream litter/recycling receptacle with one 45-gallon liner.

D. Materials:
   1. Receptacle frame and body: cast aluminum.
   2. Lid: cast aluminum.
   3. Hinge pins: stainless steel.
   4. Cam latch: stainless steel (provide recessed screwdriver-operated latch or lift lever as specified).
   5. Liners: black polyethylene, UL94HB fire rating.

E. Finishes:
   1. Lid: polyester powdercoat
      a. Standard Texture from Forms+Surfaces Powdercoat Chart.
      b. Body: polyester powdercoat (Standard Texture from Forms+Surfaces Powdercoat Chart.
   2. Installation Options (
      a. Surface mount: provide anchors and stainless steel mounting screws.

Part 1 Execution

3.01 Examination

F. Verify that substrates are stable and capable of supporting the weight of items covered under this section.

G. Verify that substrates have been adequately prepared to securely anchor those items that will be surface mounted.

3.02 Installation

H. Install according to the manufacturer's installation instructions.

I. Install in conformance to applicable ADA guidelines and End User's established Accessibility policies.

END OF SECTION

SECTION 12934

SITE SEATING AND TABLES

Part 1 General

1.01 Summary

A. Section Includes:

1. Table ensemble with cast aluminum frame and FSC® 100% Ipé hardwood slats. (FSC License Code: FSC-C004453)
2. Table ensemble with ADA option, cast aluminum frame, and FSC 100% Ipé hardwood slats.

1.02 Submittals

A. Provide submittals in accordance with Section 01 33 00 – Submittal Procedures.

B. Product data:

1. Manufacturer's standard product literature.
2. Shop drawings.
3. Installation instructions.
4. Maintenance instructions.

C. Submit powdercoat finish samples for approval.

1.03 Quality Assurance

A. Manufacturer Qualifications:

1. Minimum 15 years experience in the manufacture of site furniture.
2. Forest Stewardship Council ("FSC") Certified Supplier. Provide manufacturer's FSC certification number.
3. Provide reference list of at least ten major transportation authorities, municipalities, universities, or other high-use public environments currently using site seating fabricated by the manufacturer.

1.04 Delivery, Storage and Handling

A. Handle products in accordance with manufacturer's instructions.

B. Store products in manufacturer's original packaging until ready for installation.

C. Protect products from impacts and abrasion during storage.

1.05 Warranty

A. Provide manufacturer's standard warranty.

1. Warranty terms: one year from date of invoice against defects in materials and workmanship.

Part 2 Products

2.01 Manufacturer

A. Basis-of-design product: provide table ensembles based on the product named:

1. Trio Table Ensemble by Forms+Surfaces.
2. EP 2950 Delta Picnic Table by Equiparc

B. Table Ensembles

1. Materials:
   a. Frames: cast aluminum/galvanized steel painted.
   b. Slats: FSC 100% Ipé hardwood.
   c. Fasteners: stainless steel.
2. Finishes:
   a. Frames: polyester powdercoat
      1) Standard Texture

b. Slats: penetrating oil finish.
c. Slats, metal: anodized finish or polyester powdercoat
1) Anodized finish: Clear Anodized.
2) Polyester powdercoat:
3. Mounting: Surface mount. Provide anchors and stainless steel mounting screws.

Part 3 Execution

3.01 Examination

A. Verify that substrates are stable and capable of supporting the weight of items covered under this section.
B. Verify that substrates have been adequately prepared to securely anchor those items that will be surface mounted.

3.02 Installation

A. Install according to the manufacturer's installation instructions.
B. Install in conformance to applicable ADA guidelines and End User's established accessibility policies.

Schedule:
2 tables
3 benches

END OF SECTION

Section 16670

LIGHTNING PROTECTION SYSTEM

PART 1 - GENERAL

1.01 SECTION INCLUDES

A. Specification for lightning protection system, including design, installation and materials.

1.02 REFERENCES

A. American National Standards Institute/National File Protection Association (ANSI/NFPA)

1. NFPA No: 780 - Lightning Protection Code
2. NFPA No: 70 - National Electrical Code

   a. Section 250-46 - Spacing from Lightning Rods
   b. Section 250-86 - Use of Lightning Rods

B. American National Standards Institute/Underwriters Laboratories (ANSI/UL)

1. UL 96 - Lightning Protection Components
2. UL 96A - Safety Installation Requirements for Lightning Protection System
3. Lightning Protection Institute (LPI) - LPI 175 - Installation Standards

1.03 SUBMITTALS

A. Submit the following under the provisions of Section 01300 - Submittals:

1. Outline dimensions and weights
2. Operation and maintenance data
3. Catalog data
   Complete design and construction drawings
4. Underwriters Laboratories, Inc. Master Label Certification
5. Lightning protection institute certified system certification

1.04 QUALITY ASSURANCE

A. See Paragraph 3.02 - Installation.

1.05 PREPARATION FOR SHIPPING

A. Pack and crate materials to permit ease of handling and provide protection from damage during shipping, handling and storage.

PART 2 -PRODUCTS

2.01 ACCEPTABLE MANUFACTURERS

A. Advanced Lightning Technology

B. East Coast Lightning Equipment

C I-larger Lightning Protection

D. Thompson Lightning PI'0tection

2.02 DESIGN, CONSTRUCTION AND MATERIALS

A. System Design: Provide a functional and unobtrusive lightning protection system. Submit exceptions or variations from the Drawings to the Engineer for approval.

B. Lightning Protection Equipment: Materials shall be copper and bronze and of the size, weight, and construction to suit the application and used in accordance with PLI, UL, and NFPA code requirements. Use bolt-type connectors and splicers Class I and Class II structures. Pressure squeeze clamps are not acceptable. Use stainless steel mounting hardware to prevent corrosion.

C. Aluminum Components: Aluminum materials may not be used except on roofs that utilize aluminum roofing components. On aluminum roofs or where aluminum parapet caps are used, utilize aluminum components for roof lightning protection equipment to ensure compatibility. However, use copper down leads and grounding with the bimetal transition occurring at the through roof assembly with an approved bimetal through-roof assembly.

D. Use equipment which is UL listed and properly UL labeled. Provide equipment that is new and of a design and construction to suit the application in accordance with accepted industry standards and LPL, LJL, NFPA, and NEC code requirements.

PART 3 -EXECUTION

3.01 PREPARATION

A. The Contractor is responsible for the following coordination with the building contractors:

1. The lightning protection installer shall install a correct, neat and unobtrusive installation in cooperation with other trades.

2. The roofing contractor shall seal and flash roof lightning penetrations conforming to the roof manufacturer's recommendations. However, the lightning protection contractor shall designate locations of through-roofs and submit details of through-roof penetrations, as required.
3. Should the roofing manufacturer require any special walk pads, membrane patches or pavers under the components of the lightning protection system, the lightning protection installer shall install such items with the roofing materials (patches, pads, pavers, adhesive) supplied by the roofing manufacturer at no additional cost to the lightning protection installer.
4. The roofing contractor shall instruct the lightning protection installer of the proper installation procedures of the roof pads, patches and pavers, if required.

3.02 INSTALLATION

A. Have the system installed by an experienced installation company that is UL listed, a member of the Lightning Protection Institute and an employer of Certified Master Installers of lightning protection systems.

B. A certified Master Installer shall directly supervise equipment installation. Provide and install a complete conductor network at the roof and include air terminals, connectors, splicers, bonds, copper down leads, and proper ground terminals.

C. Use copper down lead conductors even when aluminum is required on the roof. Do not bring down lead conductors in conduit directly through the roof. Use through-roof assemblies with solid brass or stainless steel rods for this purpose. Structural steel may be utilized in the installation as outlined by UL, NFPA, and LPI.

D. Upon completion of the installation, the lightning protection installer shall secure and deliver to the Contractor for submittal to the City Engineer, the Underwriters Laboratories, Inc., Master Label certification and the Lightning Protection Institute Certified System certification. The system will not be accepted without the UL Master Label plate and the LPI certification certificate.

END OF SECTION

DOCUMENT 00003
TABLE OF CONTENTS

REQUIREMENTS

00100	Request for Competitive Sealed Proposals .....
00102	Agreement Between Galveston County and Contractor .....
00103	General Condition of the Contract .....
00201	Electrical Files Waiver, Release, and Indemnity Agreement .....
00301	Performance Bond .....
00302	Payment Bond .....

SPECIFICATIONS

01010	Summary of Work.....
01012	Wage Scale .....
01013	Employee Verification .....
01020	Allowances .....
01025	Schedule of Values .....
01027	Application for Payment .....
01030	Alternates .....
01035	Modification Procedures .....
01040	Project Coordination .....
01092	Abbreviations and Symbols .....
01200	Project Meetings.....
01300	Submittals
01310	Construction Schedule .....
01410	Testing Lab Services.....
01420	Notification of Architect Requirements .....
01500	Temporary Facilities and Controls .....
01630	Substitutions.....
01710	Guarantees and Certificates, and Closeout .....
02100	Site Preparation .....
02161	Trench Safety System .....
02220	Excavation, Trenching and Backfilling .....
02252	Cement Stabilized Sand.....
02335	Subgrade
02510	Asphalt Pavement .....
02521	Concrete Paving .....
02571	Pavement Repair and Resurfacing .....
02633	Precast Concrete Inlets, Headwalls, and Wingwalls.....
02665	Water Tap and Service Line Installation .....
02675	Disinfection of Water Lines.....
02711	Landscape Planting .....
02720	Storm Sewers .....
02731	Sanitary Sewer Force Mains .....
02732	Acceptance Testing for Sanitary Sewer .....
02775	Concrete Sidewalks.....
02831	Chain Link Fences.....
02937	Seeding and Sodding .....
03001	Concrete
03356	Concrete Floor Finishing .....

04065 Mortar and Masonry Grout .....
04200 Unit Masonry .....

05500 Metal Fabrications .....
05520 Handrails and Railings .....
05530 Gratings

06100 Rough Carpentry .....
06160 Sheathing .....
06400 Architectural Woodwork .....

07210 Thermal Insulation .....
07500 Membrane Roofing .....
07600 Flashing and Sheet Metal .....
07650 Flexible Flashing .....
07840 Firestopping .....
07900 Joint Sealers .....

08140 Wood Doors .....
08510 Exterior Aluminum Windows .....
08710 Door Hardware .....
08800 Glazing
08910 Louvers

09260 Gypsum Board Assemblies .....
09300 Tile
09510 Acoustical Ceilings .....
09772 Fiberglass Reinforced Wall Panels .....
09900 Painting and Coatings .....

10111 Marker Boards .....
10140 Signage
10160 Metal Toilet Partitions .....
10261 Corner Guards .....
10280 Toilet Accessories .....
10510 Phenolic Lockers .....
10544 Fire Protection Specialities .....

12310 Manufactured Metal Shelving .....

SECTION 02711

Landscape Planting

PART 1 - GENERAL

1.01 DESCRIPTION

A. The WORK under this Section includes providing all labor, materials, tools, and equipment necessary to furnish and install all trees and shrubs called for in the Contract Documents, all in reasonably close conformity with these Specifications and at locations shown on the Drawings or established by the ARCHITECT.

1.02 QUALITY ASSURANCE

A. Installer has technical qualifications, and at least 5 years experience with commercial projects, trained personnel, and facilities to install specified items.

1.03 SUBMITTALS

A. Submit in accordance with Section 01300, Submittals.

B. Provide plant list and indentify planting at nursery location for review and approval by ARCHITECT.

PART 2 - PRODUCTS

2.01 PLANTS

A. Plants shall be nursery-grown unless otherwise specifically permitted in each instance. American Association of Nurserymen Standard ASA Z 60.1 shall apply.

B. Upon completion of the WORK and prior to the final acceptance invoices or written statements from the suppliers showing the name of materials received or shipped, shall be presented to the ARCHITECT for a final check as to conformance to these Specifications.

C. Plant material shall conform to state and federal laws relating to inspection for diseases and insect infestation, and shall conform to the American Standard for Nursery Stock. Plant materials shall be first class representatives of their species or variety.

D. Plants shall have normal, well-developed branches and be densely foliated when in leaf. Plants shall be vigorous and free from defects, disease, insect pests, eggs or larvae, sunscaled, injuries and abrasions of the bark. Plants shall have well-developed root systems.

E. Plants shall be container grown or burlap balled. Freshly dug plants, heeled in plants or plants from cold storage shall not be accepted. Trees that have their leader cut, or are so damaged that cutting is necessary, shall not be accepted.

F. Plants shall not be pruned prior to delivery except upon written approval from the ARCHITECT.

2.02 TREES AND SHRUBS

A. Measurements of trees and shrubs shall be taken when their branches are in normal position. Height and spread dimensions specified refer to the main body of the plant, not from branch or root tip to tip. Caliper of trees shall be taken twelve inches above ground level.

2.03 GROUND COVER

B. Ground cover plants shall be furnished in pots. Unless otherwise specified. The plants shall be at least one year-old, and have been growing in post long enough to ensure sufficient root growth to hold soil in place when removed from the pot.

2.04 PLANT SIZE

A. Plant sizes shall conform to the measurements specified in the plant list. Exceptions are as follows:

1. Plants larger than specified in the plant list may be used if approved. Use of such plants shall not increase the Contract Price. If larger plants are approved, the spread of roots or ball of earth shall be increased in proportion to the increased size of the plant.

2. Up to 10% of undersized plants in any one variety or species may be used, provided that there are sufficient plants above size to make the average equal to or above specified grade. Acceptable undersize plants shall be larger than average size of the next smaller grade.

2.05 SUBSTITUTIONS

A. Substitutions will be permitted only if proof is submitted that specific plants or sizes are unobtainable. A proposal will be considered for the nearest equivalent size or variety with equitable adjustment of Contract Price.

2.06 BALLED AND BURLAPPED PLANTS

A. Balled and burlapped plants shall be contained in firm natural balls of earth, of sufficient diameter and depth to include all fibrous and feeding roots. Plants in which the ball has bee broken or cracked, either before or during planting operations, will not be accepted.

B. Balled and burlapped plants which cannot be planted immediately upon delivery shall be set on the ground and shall be well protected with soil, wet peat moss, wet sawdust, or wet ground bark.

C. Roots or balls of plants shall be protected from sun and drying winds.

D. Bundles of plants shall be opened and the plans separated before the roots are covered. Care shall be taken to prevent air pockets among the roots. During plating operations, bare roots shall be covered with canvas, hay, or other approved material.

2.07 PLANTING SOIL

A. Planting soil shall be composed of a mixture of one part topsoil and one part rotted manure or peat.

2.08 FERTILIZER

A. Fertilizer shall be a standard commercial grade of organic or inorganic fertilizer containing the following percentage of total nitrogen, available phosphoric acid and water soluble potash: 14-14-14, furnished in standard unopened containers with weight, name of plant nutrients, and manufacturer's guaranteed statement of analysis clearly marked in accordance with state and federal laws. Fertilizer shall be Osmocote 14-14-14, or approved equal.

2.09 MULCH

A. Mulch shall be ground fir, spruce, or hemlock, free from weed seeds, tannin, or other compounds detrimental to plant life. Mulch shall have a size range of one-fourth to oneinch, with a maximum of 50% passing a one-half-inch screen.

PART 3 - EXECUTION

3.01 PLANTING SEASONS

A. All planting shall be performed between May 1 and August 15, unless otherwise authorized in writing by the ARCHITECT.

3.02 LAYOUT OF PLANT MATERIAL

A. The ARCHITECT will stake the location of all planting pits.

3.03 INSPECTION OF PLANT MATERIAL

A. Plants shall be subject to inspection and approval upon delivery as to size, quality, species, and variety. Approval shall not impair the right of inspection and rejection upon delivery at the site or during the progress of the WORK, for reasons of size, condition of ball or roots, diseases, insects, latent defects, or injuries. Plants that meet the measurements specified, but do not possess a normal balance between height and spread, shall be rejected. Rejected plants shall be removed from the site immediately.

3.04 PLANNTING PITS

A. Excavate circular pits with vertical sides to a diameter at least two feet greater than the rootball and at least one foot greater in depth. Before any planting is done, the ARCHITECT shall be notified of any soil conditions detrimental to the growth of plant materials that are encountered when excavating planting pits.

3.05 PLACEMENT AND BACKFILL

A. Before plant placement, thoroughly mix fertilizer (Osmocote 14-14-14, or approved equal) with planting soil at the rate of one pound of fertilizer per ten cubic feet of planting soil. Backfill pit with one foot of planting soil or until original root crown soil line is flush with, or slightly above, finished grade when plant is set in pit. Place plant in center of pit in upright position. When pit has been backfilled approximately two thirds full, water thoroughly, saturating rootball and eliminating all air pockets. Complete backfill around rootball with soil mixture and bring to finish grade while flooding with water. After backfilling, apply fertilizer (Osmocote 14-14-14, or approved equal) to surface around periphery of plant rootballs at the rate of ten pounds per 1,000 square feet.

3.06 TREE STAKING

A. Stake all trees as recommended by the supplier.

3.07 PRUNING

A. Pruning shall be done in accordance with standard horticultural practice to preserve the natural character of the plant.

3.08 MULCHING

A. All planting pits shall be mulched to a two inch depth in a 30-inch circle. Mulch shall be applied within two days after planting.

3.09 MAINTENANCE

A. Maintenance of all plants shall be required from the time of planting until the initial acceptance. Maintenance shall include watering, weeding, tightening and repairing of guys, resetting plants to proper grades or upright position and removal of dead materials.

B. No plants will be accepted unless they show a healthy growth and satisfactory foliage condition.

3.10 GUARANTEE

A. The CONTRACTOR shall provide 100% replacement guarantee for a period of one year, beginning at the date of Substantial Completion. At the end of the guarantee period and upon written request from the CONTRACTOR, the ARCHITECT will make final inspection. The ARCHITECT will ensure the plants are health, showing satisfactory growth and, in general, show signs of developing into healthy, mature representatives of their species. The CONTRACTOR shall remove and replace promptly any plant material that is dead or not showing satisfactory growth.

B. Any necessary repairs under the guarantee shall be made within thirty days after receiving notice of need, weather permitting. In the event the CONTRACTOR does not make repairs accordingly, the OWNER, without further notice, may provide materials and labor to make such repairs at the expense of the CONTRACTOR. The replacement shall be on the same variety, size and character as specified for original planting. If approved by the ARCHITECT, trees may be replanted at start of next year's planting season. In such cases, the CONTRACTOR shall remove dead trees immediately.

END OF SECTION

SECTION 03350
CONCRETE FINISHING

PART 1 - GENERAL

1.01 SECTION INCLUDES

A. Finishing slabs on grade and monolithic floor slabs.

B. Surface treatment with concrete hardener, sealer, and slip resistant coatings.

1.02 RELATED SECTIONS

1.03 REFERENCES

A. ACI 301 - Specifications for Structural Concrete for Buildings; American Concrete Institute International; 2005.

B. ACI 302.1R - Guide for Concrete Floor and Slab Construction; American Concrete Institute International; 2004.

1.04 SUBMITTALS

A. See the Section for Administrative Requirements, for submittal procedures.

B. Product Data: Provide data on concrete hardener, sealer, and slip resistant treatment, including information on compatibility of different products and limitations.

C. Maintenance Data: Provide data on maintenance renewal of applied coatings.

1.05 QUALITY ASSURANCE

A. Perform Work in accordance with ACI 301.

1. Maintain one copy on project site.

1.06 DELIVERY, STORAGE, AND HANDLING

A. Deliver materials in manufacturer's sealed packaging, including application instructions.

1.07 PROJECT CONDITIONS

A. Coordinate the work with concrete floor placement and concrete floor curing.

1.08 ENVIRONMENTAL REQUIREMENTS

D. Temporary Lighting: Minimum 200 W light source, placed 8 feet above the floor surface, for each 425 sq.ft. of floor being finished.

E. Do not finish floors until interior heating system is operational.

F. Temporary Heat: Ambient temperature of 50 degrees F minimum.

G. Ventilation: Sufficient to prevent injurious gases from temporary heat or other sources affecting concrete.

PART 2 - PRODUCTS

2.01 COMPOUNDS - HARDENERS AND SEALERS

A. Pentrasil or Permashine

2.02 SLIP RESISTANT TREATMENT

A. Provide documentation to comply with Texas Accessibility Standards for wet/dry slip resistant coefficients.

PART 3 - EXECUTION

3.01 EXAMINATION

A. Verify that floor surfaces are acceptable to receive the work of this section.

B. Schedule on site meeting to review sample area 100 SF minimum prior to sealing designated areas.

3.02 FLOOR FINISHING

A. Finish concrete floor surfaces in accordance with ACI 301 and ACI 302.1R.

B. Steel trowel surfaces that will receive carpeting, resilient flooring, thin set quarry tile, or thin set ceramic tile.

C. Steel trowel surfaces that are scheduled to be exposed.

D. In areas with floor drains, maintain design floor elevation at walls; slope surfaces uniformly to drains at 1/8 inch per foot nominal.

3.03 FLOOR SURFACE TREATMENT

A. Apply hardener to scheduled floor surfaces in accordance with manufacturer's instructions.

B. Apply slip resistant finish to scheduled floor surfaces in accordance with manufacturer's instructions.

C. Apply sealer to scheduled floor surfaces in accordance with manufacturer's instructions.

3.04 TOLERANCES

A. Measure flatness of slabs in accordance with ACI 302.1R and to achieve the following tolerances:

1. Maximum Variation of Surface Flatness For Exposed Concrete Floors: 1/4 inch in 10 ft.

2. Maximum Variation of Surface Flatness Under Carpeting: 1/4 inch in 10 ft.

B. Correct the slab surface if tolerances are less than specified.

C. Correct defects by grinding or by removal and replacement of the defective work. Areas requiring corrective work will be identified. Re-measure corrected areas by the same process.

END OF SECTION

SECTION 04065

MORTAR AND MASONRY GROUT

PART 1 - GENERAL

1.01 SECTION INCLUDES

A. Mortar for masonry.

1.02 RELATED SECTIONS

A. Section 04816 - Masonry Veneer: Installation of mortar.

1.03 REFERENCES

A. ASTM C 91 - Standard Specification for Masonry Cement; 2003a.

B. ASTM C 150 - Standard Specification for Portland Cement; 2002a.

C. ASTM C 270 - Standard Specification for Mortar for Unit Masonry; 2003b.

D. ASTM C 1142 - Standard Specification for Extended Life Mortar for Unit Masonry; 1995 (Reapproved 2001).

1.04 SUBMITTALS

A. See Section 01300 - Administrative Requirements, for submittal procedures.

B. Product Data: Include design mix and indicate whether the Proportion or Property specification of ASTM C 270 is to be used. Also include required environmental conditions and admixture limitations.

C. Manufacturer's Certificate: Certify that products meet or exceed specified requirements.

1.05 DELIVERY, STORAGE, AND HANDLING

A. Maintain packaged materials clean, dry, and protected against dampness, freezing, and foreign matter.

1.06 ENVIRONMENTAL REQUIREMENTS

A. Maintain materials and surrounding air temperature to minimum 40 degrees F prior to, during, and 48 hours after completion of masonry work.

B. Maintain materials and surrounding air temperature to maximum 90 degrees F prior to, during, and 48 hours after completion of masonry work.

PART 2 - PRODUCTS

2.01 MATERIALS

A. Masonry Cement: ASTM C 91, Type S.

B. Portland Cement: ASTM C 150, Type I - Normal; color as required to produce approved colorsample.

C. Pigments for Colored Mortar: Iron or chromium oxides with demonstrated stability and colorfastness.

D. Bonding Agent: Latex type.

2.02 MORTAR MIXES

A. Ready Mixed Mortar: ASTM C 1142, Type RS.

B. Mortar for Unit Masonry: ASTM C 270, Property Specification.

1. Exterior, non-loadbearing masonry: Type S.

C. Colored Mortar: Proportion selected pigments and other ingredients to match Architect's sample, without exceeding manufacturer's recommended pigment-to-cement ratio.

2.03 MORTAR MIXING

A. Thoroughly mix mortar ingredients using mechanical batch mixer, in accordance with ASTM C 270 and in quantities needed for immediate use.

B. Maintain sand uniformly damp immediately before the mixing process.

C. Add mortar color in accordance with manufacturer's instructions. Provide uniformity of mix and coloration.

D. Do not use anti-freeze compounds to lower the freezing point of mortar.

E. If water is lost by evaporation, re-temper only within two hours of mixing.

F. Use mortar within two hours after mixing at temperatures of 90 degrees F, or two-and-one-half hours at temperatures under 40 degrees F.

PART 3 - EXECUTION

3.01 PREPARATION

A. Apply bonding agent to existing concrete surfaces.

3.02 INSTALLATION

A. Install mortar to requirements of section(s) in which masonry is specified.

3.03 FIELD QUALITY CONTROL

A. Daily field observation.

END OF SECTION

SECTION 04200
UNIT MASONRY

PART 1 - GENERAL

SECTION 04200 - MASONRY

PART 1 - GENERAL

1.01 DESCRIPTION

A. Masonry work includes concrete unit masonry and brick masonry.

B. Reinforcement, anchorage, and accessories.

C. Flashings.

1.02 RELATED REQUIREMENTS

A. Section 03200 - Concrete Reinforcing: Reinforcing steel for grouted masonry.

B. Section 06100 - Rough Carpentry: Blocking in conjunction with the Work of this Section.

C. Section 07900 - Joint Sealers: Rod and sealant at control joints.

D. Section 08111 - Hollow Metal Doors and Frames: Doors and door frames installed in the Work of this Section.

E. Section 08511 - Aluminum Windows: Aluminum windows installed in the Work of this Section.

F. Section 08910 - Louvers: Louver assemblies installed in the Work of this Section.

1.03 REFERENCE STANDARDS

A. ACI 530/530.1/ERTA - Building Code Requirements and Specification for Masonry Structures; American Concrete Institute International; 2009.

B. ASTM A82/A82M - Standard Specification for Steel Wire, Plain, for Concrete Reinforcement; 2007.

C. ASTM A153/A153M - Standard Specification for Zinc Coating (Hot-Dip) on Iron and Steel Hardware; 2009.

D. ASTM A615/A615M - Standard Specification for Deformed and Plain Billet-Steel Bars for Concrete Reinforcement; 2009b.

E. ASTM A641/A641M - Standard Specification for Zinc-Coated (Galvanized) Carbon Steel Wire; 2009a.

F. ASTM A653/A653M - Standard Specification for Steel Sheet, Zinc-Coated (Galvanized) or Zinc-Iron Alloy-Coated (Galvannealed) by the Hot-Dip Process; 2010.

G. ASTM C34 - Standard Specification for Structural Clay Load-Bearing Wall Tile; 2010.

H. ASTM C56 - Standard Specification for Structural Clay Nonloadbearing Tile; 2010.

I. ASTM C67 - Standard Test Methods for Sampling and Testing Brick and Structural Clay Tile; 2009.

J. ASTM C216 - Standard Specification for Facing Brick (Solid Masonry Units Made From Clay or Shale); 2010.

K. ASTM C652 - Standard Specification for Hollow Brick (Hollow Masonry Units Made From Clay or Shale); 2010.

L. UL (FRD) - Fire Resistance Directory; Underwriters Laboratories Inc.; current edition.

1.04 SUBMITTALS

A. See Section 01 30 00 - Administrative Requirements, for submittal procedures.

B. Product Data: Provide data for decorative masonry units and fabricated wire reinforcement.

C. Samples: Submit four samples of face brick units to illustrate color, texture and extremes of color range.

D. Manufacturer's Certificate: Certify that products meet or exceed specified requirements.

1.05 QUALITY ASSURANCE

A. All work shall conform to the standards of the Brick Institute of America and to codes having jurisdiction.

B. Do not lay units that are wet or frozen.

C. All brick shall be from a single manufacturer’s production run.

D. Mortar and Grout Testing:

1. Test each type of mortar in conformance with ASTM C 780-00.

2. Test grout in each type of wall construction in conformance with ASTM C 1019

3. Inspect cores of fully grouted masonry reinforcing.

E. Comply with provisions of ACI 530/530.1/ERTA, except where exceeded by requirements of the contract documents.

1.06 DELIVERY, STORAGE, AND HANDLING

A. Deliver, handle, and store masonry units by means that will prevent mechanical damage and contamination by other materials.

PART 2 - PRODUCTS

2.01 FACE BRICK:

A. Manufacturers:

1. Acme Brick - Denton Plant, Red Sunset Smooth Finish

2. Columbus Brick - Burlington Modular

3. Cherokee Brick, Smooth Burgundy

4. Substitutions: See Section 01 60 00 - Product Requirements.

B. Hollow Clay Structural Brick: ASTM C 652, Grade SW; Type HBS; Class H40V.

1. Compressive strength: 11,000 psi, measured in accordance with ASTM C67.

2. Special shapes: Molded units as required for lintels, unless standard units can be sawn to produce equivalent effect.

3. Provide solider units with adjacent side finish at end units.

2.02 CONCRETE MASONRY UNITS:

A. Provide hollow load bearing block complying with ASTM C90, normal weight.

1. Size: Nominal 16" long x 8" high

2. Grade: N

3. Type: II

2.03 MORTAR AND GROUT:

A. Provide mortar and grout complying with ASTM C 270 or ASTM C476 (for reinforced masonry) and requirements of architect of record. Type S based on proportion specification.

B. MORTAR MATERIALS:

1. Portland cement; ASTM C 150, type I.
2. Masonry cement: ASTM C 91.
3. Hydrated lime: ASTM C207, type S
4. Sand; ASTM C 144
5. Aggregates for grout ASTM C 404
6. Mortar color pigment: none
7. Admixture: anti-freeze compounds or those containing chlorides are prohibited.
   a. Provide Grace Masonry Products DRY-BLOCK™ mortar admixture at all single wythe concrete masonry unit and hollow brick masonry walls.
8. Water: drinkable.

C. Joint Reinforcement: Provide zinc coated (galvanized) steel wire, ASTM A 82 (uncoated wire), ASTM C 641 for zinc coating, type as required by the architect of record.

D. Corrugated wall ties are prohibited.

E. Miscellaneous Materials: Flashing, weep products, control/expansion joint materials as required by architect of record.

1. Acceptable concealed flexible flashing: 3 oz copper sheet bonded between two layers of asphalt waterproofed creped kraft paper, EPDM thru-wall flashing (40 mil min.).
2. Acceptable weep products (brick masonry): Rectangular plastic tubes with insect screen and cotton wick, cotton wick cords, 'Core Vent', 'Mortar Net' weep vent.
3. Cavity drainage system; provide Mortar Net™ or approved equal at brick masonry.

2.04 ACCESSORIES

A. Preformed Control Joints: Neoprene material. Provide with corner and tee accessories, fused joints.

1. 1. Manufacturers:
   a. WIRE-BOND: www.wirebond.com.
   b. Substitutions: See Section 01 60 00 - Product Requirements.

B. Joint Filler: Closed cell polyvinyl chloride; oversized 50 percent to joint width; self expanding; in maximum lengths available.

1. Manufacturers:
   a. Dur-O-Wal: www.dur-o-wal.com.
   b. WIRE-BOND: www.wirebond.com.

c. Substitutions: See Section 01 60 00 - Product Requirements.

C. Nailing Strips: Preservative treated softwood, as specified in Section 06 10 00.

D. Cleaning Solution: Non-acidic, not harmful to masonry work or adjacent materials.

PART 3 - EXECUTION

3.01 EXAMINATION

A. Verify that field conditions are acceptable and are ready to receive masonry.

B. Verify that related items provided under other sections are properly sized and located.

C. Verify that built-in items are in proper location, and ready for roughing into masonry work.

3.02 PREPARATION

A. Direct and coordinate placement of metal anchors supplied for installation under other sections.

B. Provide temporary bracing during installation of masonry work. Maintain in place until building structure provides permanent bracing.

3.03 COURSING

A. Establish lines, levels, and coursing indicated. Protect from displacement.

B. Maintain masonry courses to uniform dimension. Form vertical and horizontal joints of uniform thickness.

C. Brick Units:

1. Bond: Running.

2. Coursing: Three units and three mortar joints to equal 8 inches.

3. Mortar Joints: Weather Struck.

3.04 PLACING AND BONDING

A. Lay hollow masonry units with face shell bedding on head and bed joints.

B. Buttering corners of joints or excessive furrowing of mortar joints is not permitted.

C. Remove excess mortar as work progresses.

D. Interlock intersections and external corners.

E. Do not shift or tap masonry units after mortar has achieved initial set. Where adjustment must be made, remove mortar and replace.

F. Perform job site cutting of masonry units with proper tools to provide straight, clean, unchipped edges. Prevent broken masonry unit corners or edges.

G. Isolate masonry partitions from vertical structural framing members with a control joint as indicated.

H. Isolate top joint of masonry partitions from horizontal structural framing members and slabs or decks with compressible joint filler.

3.05 REINFORCEMENT AND ANCHORAGE

A. Install horizontal joint reinforcement 16 inches on center.

B. Place masonry joint reinforcement in first and second horizontal joints above and below openings. Extend minimum 16 inches each side of opening.

C. Place continuous joint reinforcement in first and second joint below top of walls.

D. Lap joint reinforcement ends minimum 14 inches.

E. Reinforce joint corners and intersections with strap anchors 16 inches on center.

F. Install anchors to concrete framing at not more than 16 inches on center.

G. Install vertical reinforcement in grouted cells per structural notes and drawings.

3.06 MASONRY FLASHINGS

A. Whether or not specifically indicated, install masonry flashing to divert water to exterior at all locations where downward flow of water will be interrupted.

1. Extend flashings full width at such interruptions and at least 4 inches into adjacent masonry or turn up at least 4 inches to form watertight pan at non-masonry construction.

2. Remove or cover protrusions or sharp edges that could puncture flashings.

3. Seal lapped ends and penetrations of flashing before covering with mortar.

B. Extend metal flashings through exterior face of masonry and turn down to form drip.

C. Lap end joints of flashings at least 4 inches and seal watertight with mastic or elastic sealant.

3.07 LINTELS

A. Install reinforced unit masonry lintels over openings.

1. Openings to 42 inches: Place two, No. 3 reinforcing bars 1 inch from bottom web.

2. Openings from 42 inches to 78 inches: Place two, No. 5 reinforcing bars 1 inch from bottom web.

3. Do not splice reinforcing bars.

4. Support and secure reinforcing bars from displacement. Maintain position within 1/2 inch of dimensioned position.

5. Place and consolidate grout fill without displacing reinforcing.

6. Allow masonry lintels to attain specified strength before removing temporary supports.

B. Maintain minimum eight inch bearing on each side of opening.

3.08 GROUTED COMPONENTS

A. Walls are to be fully grouted solid.

B. Support and secure reinforcing bars from displacement. Maintain position within 1/2 inch of dimensioned position.

C. Place and consolidate grout fill without displacing reinforcing.

3.09 CONTROL AND EXPANSION JOINTS

A. Do not continue horizontal joint reinforcement through control and expansion joints.

3.10 BUILT-IN WORK

A. As work progresses, install built-in metal door frames and other items to be built into the work and furnished under other sections.

B. Install built-in items plumb, level, and true to line.

C. Bed anchors of metal door and glazed frames in adjacent mortar joints. Fill frame voids solid with grout.

D. Do not build into masonry construction organic materials that are subject to deterioration.

3.11 TOLERANCES

A. Maximum Variation from Unit to Adjacent Unit: 1/16 inch.

B. Maximum Variation from Plane of Wall: 1/4 inch in 10 ft and 1/2 inch in 20 ft or more.

C. Maximum Variation from Plumb: 1/4 inch per story non-cumulative; 1/2 inch in two stories or more.

D. Maximum Variation from Level Coursing: 1/8 inch in 3 ft and 1/4 inch in 10 ft; 1/2 inch in 30 ft.

E. Maximum Variation of Joint Thickness: 1/8 inch in 3 ft.

F. Maximum Variation from Cross Sectional Thickness of Walls: 1/4 inch.

3.12 CUTTING AND FITTING

G. Cut and fit for chases, pipes, conduit, and sleeves. Coordinate with other sections of work to provide correct size, shape,and location.

H. Obtain approval prior to cutting or fitting masonry work not indicated or where appearance or strength of masonry work may be impaired.

3.13 FIELD QUALITY CONTROL

A. Provide daily observation of all aspects of the masonry installation.

3.14 CLEANING

A. Remove excess mortar and mortar smears as work progresses.

B. Replace defective mortar. Match adjacent work.

C. Clean soiled surfaces with manufactured recommended cleaning solution. Apply cleaning solution in strict accordance with solution manufacturers written instructions. Do not use muriatic acid. Do not sandblast.

D. Use non-metallic tools in cleaning operations.

3.16 PROTECTION

A. Without damaging completed work, provide protective boards at exposed external corners that are subject to damage by construction activities.

END OF SECTION

SECTION 05500

METAL FABRICATIONS

PART 1 - GENERAL

1.01 SECTION INCLUDES

A. Shop fabricated steel items.

B. Exterior sleeved guardrails at dumpsters hot-dipped galvanized - unpainted.

C. Mezzanine guardrails, removable hot-dipped galvanized - unpainted.

D. Continuous steel angle threshold at garage door openings hot-dipped galvanized - unpainted

E. Pipe bollards hot-dipped galvanized - unpainted.

F. Surface mounted cane rail per ADA standards hot-dipped galvanized - painted.

1.02 REFERENCES

A. ASTM A 36/A 36M - Standard Specification for Carbon Structural Steel; 2003a.

B. ASTM A 53/A 53M - Standard Specification for Pipe, Steel, Black and Hot-Dipped, Zinc-Coated, Welded and Seamless; 2002.

C. ASTM A 123/A 123M - Standard Specification for Zinc (Hot-Dip Galvanized) Coatings on Iron and Steel Products; 2002.

D. AWS A2.4 - Standard Symbols for Welding, Brazing, and Nondestructive Examination; American Welding Society; 1998.

E. SSPC-Paint 20 - Zinc-Rich Primers (Type I, "Inorganic," and Type II, "Organic"); Society for Protective Coatings; 2002.

1.03 SUBMITTALS

A. See Section 01300 - Administrative Requirements, for submittal procedures.

B. Shop Drawings: Indicate profiles, sizes, connection attachments, reinforcing, anchorage, size and type of fasteners, and accessories. Include erection drawings, elevations, and details where applicable.

1. Indicate welded connections using standard AWS A2.4 welding symbols. Indicate net weld lengths.

C. Welders' Certificates: Submit certification for welders employed on the project, verifying AWS qualification within the previous 12 months.

PART 2 - PRODUCTS

2.01 MATERIALS - STEEL

A. Steel Sections: ASTM A 36/A 36M.

B. Pipe: ASTM A 53/A 53M, Grade B Schedule 40, hot-dip galvanized finish.

C. Touch-Up Primer for Galvanized Surfaces: SSPC-Paint 20, Type I - Inorganic, complying with VOC limitations of authorities having jurisdiction.

2.02 FABRICATED ITEMS

A. Bollards: Steel pipe, concrete filled, steel cap, as detailed; galvanized finish.

B. Guardrails: 1-1/2" posts and top rail, 3/4" horizontal @ 4" on center, as detailed; galvanized finish.

C. Cane rail: 1-1/2" @ 12" high with 3" plates bolted to slab; galvanized finish.

D. Lintels and Threshold: As detailed; galvanized finish.

E. Hung Toilet Frame: per toilet and urinal manufacturer's recommendations

2.03 FINISHES - STEEL

A. Galvanizing of Non-structural Items: Galvanize after fabrication to ASTM A 123/A 123M requirements.

2.04 FABRICATION TOLERANCES

A. Squareness: 1/8 inch maximum difference in diagonal measurements.

B. Maximum Offset Between Faces: 1/16 inch.

C. Maximum Misalignment of Adjacent Members: 1/16 inch.

D. Maximum Bow: 1/8 inch in 48 inches.

E. Maximum Deviation From Plane: 1/16 inch in 48 inches.

PART 3 - EXECUTION

3.01 EXAMINATION

A. Verify that field conditions are acceptable and are ready to receive work.

3.02 PREPARATION

A. Supply setting templates to the appropriate entities for steel items required to be cast into concrete or embedded in masonry.

3.03 INSTALLATION

A. Install items plumb and level, accurately fitted, free from distortion or defects.

B. Provide for erection loads, and for sufficient temporary bracing to maintain true alignment until completion of erection and installation of permanent attachments.

C. Obtain approval prior to site cutting or making adjustments not scheduled.

3.04 ERECTION TOLERANCES

A. Maximum Variation From Plumb: 1/4 inch per story, non-cumulative.

B. Maximum Offset From True Alignment: 1/4 inch.

C. Maximum Out-of-Position: 1/4 inch.

END OF SECTION

SECTION 05520
HANDRAILS AND RAILINGS

PART 1 - GENERAL

1.01 SECTION INCLUDES

A. Steel pipe handrails, balusters, and fittings.

1.02 REFERENCES

A. ASTM A 123/A 123M - Standard Specification for Zinc (Hot-Dip Galvanized) Coatings on Iron and Steel Products; 2002.
B. ASTM E 935 - Standard Test Methods for Performance of Permanent Metal Railing Systems and Rails for Buildings; 2000.
C. ASTM E 985 - Standard Specification for Permanent Metal Railing Systems and Rails for Buildings; 2000.
D. SSPC-Paint 15 - Steel Joist Shop Paint; The Society for Protective Coatings; 1999 (Ed. 2004).
E. SSPC-Paint 20 - Zinc-Rich Primers (Type I, "Inorganic," and Type II, "Organic"); The Society for Protective Coatings; 2002 (Ed. 2004).

1.03 DESIGN REQUIREMENTS

A. Design railing assembly, wall rails, and attachments to resist lateral force of 250 lbs at any point without damage or permanent set.

1.04 SUBMITTALS

A. See Section 01300 - Administrative Requirements, for submittal procedures.
B. Shop Drawings: Indicate profiles, sizes, connection attachments, anchorage, size and type of fasteners, and accessories.

PART 2 - PRODUCTS

2.01 RAILINGS - GENERAL REQUIREMENTS

A. Design, fabricate, and test railing assemblies in accordance with the most stringent requirements of ASTM E 985 and applicable local code.
B. Design railing assembly, wall rails, and attachments to resist lateral force of 75 lbs at any point without damage or permanent set. Test in accordance with ASTM E 935.
C. Allow for expansion and contraction of members and building movement without damage to connections or members.
D. Dimensions: See drawings for configurations and heights.
E. Provide anchors and other components as required to attach to structure, made of same materials as railing components unless otherwise indicated; where exposed fasteners are unavoidable provide flush countersunk fasteners.
F. Provide welding fittings to join lengths, seal open ends, and conceal exposed mounting bolts and nuts, including but not limited to elbows, T-shapes, splice connectors, flanges, escutcheons, and wall brackets.

2.02 STEEL RAILING SYSTEM – 316 STAINLESS STEEL

A. Welding Fittings: Factory- or shop-welded from matching pipe or tube; seams continuously welded; joints and seams ground smooth.
B. Rails and Posts: 1 1/4" inch diameter steel pipe; welded joints; 316 Stainless Steel
C. Fittings: Elbows, T-shapes, wall brackets, escutcheons; stainless steel.
D. Mounting: Brackets and flanges, with steel inserts for casting in concrete. Prepare backing plate for mounting in metal stud and drywall wall construction or as noted.
E. Exposed Fasteners: Flush countersunk screws or bolts; consistent with design of railing.
F. Straight Splice Connectors: Stainless Steel concealed spigots.

2.03 FABRICATION

A. Accurately form components to suit specific project conditions and for proper connection to building structure.
B. Fit and shop assemble components in largest practical sizes for delivery to site.
C. Fabricate components with joints tightly fitted and secured. Provide spigots and sleeves to accommodate site assembly and installation.
D. Welded Joints: Continuous and ground smooth.
E. Provide anchors and angles required for connecting railings to structure.
F. Exposed Mechanical Fastenings: Provide flush countersunk screws or bolts; unobtrusively located; consistent with design of component, except where specifically noted otherwise.
G. Supply components required for anchorage of fabrications. Fabricate anchors and related components of same material and finish as fabrication, except where specifically noted otherwise.
H. Exterior Components: Continuously seal joined pieces by continuous welds. Drill condensate drainage holes at bottom of members at locations that will not encourage water intrusion.
I. Interior Components: Continuously seal joined pieces by continuous welds.
J. Grind exposed joints flush and smooth with adjacent finish surface. Make exposed joints butt tight, flush, and hairline. Ease exposed edges to small uniform radius.
K. Accurately form components to suit specific project conditions and for proper connection to building structure.
L. Accommodate for expansion and contraction of members and building movement without damage to connections or members.

PART 3 - EXECUTION

3.01 EXAMINATION

A. Verify that field conditions are acceptable and are ready to receive work.

3.02 PREPARATION

A. Supply items required to be cast into concrete or embedded in masonry with setting templates, for installation as work of other sections.

3.03 INSTALLATION

A. Install in accordance with manufacturer's instructions.
B. Install components plumb and level, accurately fitted, free from distortion or defects, with tight joints.

C. Anchor railings securely to structure.
D. Conceal anchor bolts and screws whenever possible. Where not concealed, use flush countersunk fastenings.
E. Assemble with spigots and sleeves to accommodate tight joints and secure installation.

3.04 ERECTION TOLERANCES

A. Maximum Variation From Plumb: 1/4 inch per floor level, non-cumulative.
B. Maximum Offset From True Alignment: 1/4 inch.
C. Maximum Out-of-Position: 1/4 inch.

3.05 SCHEDULE – REFERENCE DRAWINGS

A. Exterior Handrails and Railings at steps, 316 Stainless Steel.
B. Interior step Railing specified with metal stair - Section 05 510.

END OF SECTION

SECTION 06100
ROUGH CARPENTRY

PART 1 - GENERAL

1.01 SECTION INCLUDES

A. Floor, wall, and roof sheathing.

B. Preservative treatment of wood.

C. Fire retardant treatment of wood.

D. Miscellaneous framing and sheathing.

E. Telephone and electrical panel boards.

F. Wood nailers and curbs for roofing.

G. Concealed wood blocking for support of toilet and bath accessories and wall cabinets.

H. Miscellaneous wood nailers and furring strips.

1.02 RELATED SECTIONS

A. Section 05120 - Structural Steel: Prefabricated beams and columns for support of wood framing.

B. Section 07620 - Sheet Metal Flashing and Trim: Sill flashings.

1.03 REFERENCES

A. AFPA T10 -Wood Frame Construction Manual; American Forest and Paper Association; 2001.

B. ASTM A 153/A 153M - Standard Specification for Zinc Coating (Hot-Dip) on Iron and Steel Hardware; 2003.

C. AWPA C2 - Lumber, Timber, Bridge Ties and Mine Ties -- Preservative Treatment by Pressure

D. Processes; American Wood-Preservers' Association; 2002. AWPA U1 - Use Category System: User Specification for Treated Wood; American Wood-Preservers' Association; 2003.

E. PS 1 - Construction and Industrial Plywood; National Institute of Standards and Technology (Department of Commerce); 1995.

F. PS 20 - American Softwood Lumber Standard; National Institute of Standards and Technology (Department of Commerce); 1999.

G. SPIB (GR) - Grading Rules; Southern Pine Inspection Bureau, Inc.; 2002.

1.04 SUBMITTALS

A. See Section 01300 - Administrative Requirements, for submittal procedures.

B. Product Data: Provide technical data on wood preservative materials and application instructions.

1.05 QUALITY ASSURANCE

A. Lumber: Comply with PS 20 and approved grading rules and inspection agencies.

B. Preservative-Treated Wood: Provide lumber and plywood marked or stamped by an ALSCaccredited testing agency, certifying level and type of treatment in accordance with AWPA standards.

1.06 DELIVERY, STORAGE, AND HANDLING

A. General: Cover wood products to protect against moisture. Support stacked products to prevent deformation and to allow air circulation.

PART 2 - PRODUCTS

2.01 DIMENSION LUMBER

A. Grading Agency: Southern Pine Inspection Bureau, Inc. (SPIB).

B. Sizes: Nominal sizes as indicated on drawings, S4S.

C. Moisture Content: Kiln-dry or MC15.

D. Stud Framing (2 x 2 through 2 x 6):

1. Species: Southern Pine.

2. Grade: No. 2.

E. Joist, Rafter, and Small Beam Framing (2 x 6 through 4 x 16):

1. Species: Southern Pine.

2. Grade: No. 2, unless a higher grade is shown on Drawings.

F. Miscellaneous Blocking, Furring, and Nailers:

1. Lumber: S4S, No. 2 or Standard Grade.

2.02 CONSTRUCTION PANELS

A. Plywood Wall Sheathing: PS 1, Grade C-D, Exposure I.

B. Miscellaneous Panels:

1. Concealed Plywood: PS 1, C-C Plugged, exterior grade.

2. Exposed Plywood: PS 1, A-D, interior grade.

3. Electrical Component Mounting: APA rated sheathing, fire retardant treated.

2.03 ACCESSORIES-NOT REQUIRED

2.04 FACTORY WOOD TREATMENT

A. Treated Lumber and Plywood: Comply with requirements of AWPA U1 - Use Category System for wood treatments determined by use categories, expected service conditions, and specific applications.

B. Preservative Treatment:

1. Manufacturers:

a. Arch Wood Protection, Inc.: www.wolmanizedwood.com.
b. Chemical Specialties, Inc.: www.treatedwood.com.
c. Osmose, Inc.: www.osmose.com.
d. Substitutions: See Section 01600 - Product Requirements.

C. Preservative Pressure Treatment of Lumber Above Grade: AWPA Use Category UC3B, Commodity Specification A (Treatment C2) using waterborne preservative to .40 lb/cu ft retention.

1. Kiln dry lumber after treatment to maximum moisture content of 19 percent.
2. Treat lumber in contact with roofing, flashing, or waterproofing.
3. Treat lumber in contact with masonry or concrete.

PART 3 - EXECUTION

3.01 FRAMING INSTALLATION

A. Set structural members level, plumb, and true to line. Discard pieces with defects that would lower required strength or result in unacceptable appearance of exposed members.

B. Make provisions for temporary construction loads, and provide temporary bracing sufficient to maintain structure in true alignment and safe condition until completion of erection and installation of permanent bracing.

C. Install structural members full length without splices unless otherwise specifically detailed.

D. Comply with member sizes, spacing, and configurations indicated, and fastener size and spacing indicated, but not less than required by applicable codes and AFPA Wood Frame Construction Manual.

E. Construct double joist headers at floor and ceiling openings and under wall stud partitions that are parallel to floor joists; use metal joist hangers unless otherwise detailed.

F. Provide bridging at joists in excess of 8 feet span as detailed. Fit solid blocking at ends of members.

G. Frame openings with two or more studs at each jamb; support headers on cripple studs.

H. Provide miscellaneous members as indicated or as required to support finishes, fixtures, specialty items, and trim.

3.02 INSTALLATION OF ACCESSORIES AND MISCELLANEOUS WOOD

A. Coordinate size, location, and installation of blocking for toilet accessories, window openings or sheet metal.

3.03 INSTALLATION OF CONSTRUCTION PANELS

A. Wall Sheathing: Secure with long dimension perpendicular to wall studs, with ends over firm bearing and staggered, using screws.

3.04 SITE APPLIED WOOD TREATMENT

A. Apply preservative treatment compatible with factory applied treatment at site-sawn cuts, complying with manufacturer's instructions.

B. Allow preservative to dry prior to erecting members.

3.05 TOLERANCES

A. Framing Members: 1/4 inch from true position, maximum.

B. Variation from Plane (Other than Floors): 1/4 inch in 10 feet maximum, and 1/4 inch in 30 feet maximum.

END OF SECTION

SECTION 06160

SHEATHING

PART 1 - GENERAL

1.01 RELATED DOCUMENTS

A. Drawings and general provisions of the Contract, including General Conditions, Special Provisions and Division 1 Specifications Sections, apply to this Section.

1.02 SUMMARY

A. This Section includes the following:

1. Glass-mat wall sheathing.
2. Sheathing joint-and-penetration treatment.
3. Flexible flashing at openings in sheathing.

1.03 SUBMITTALS

A. Product Data: For each type of process and factory-fabricated product. Indicate component materials and dimensions and include construction and application details.

B. Research/Evaluation Reports: For the following:

1. Building Air and Vapor Barrier wrap.

1.04 QUALITY ASSURANCE

A. Fire-Test-Response Characteristics: For assemblies with fire-resistance ratings, provide materials and construction identical to those of assemblies tested for fire resistance per ASTM E 119 by a testing and inspecting agency acceptable to authorities having Jurisdiction.

1.05 DELIVERY, STORAGE, AND HANDLING

A. Stack panels flat with spacers between each bundle to provide air circulation. Provide for air circulation around stacks and under coverings.

PART 2 - PRODUCTS

3.01 WALL SHEATHING

A. Glass-Mat Gypsum Wall Sheathing – “Dens-Glass Gold as by G-P Gypsum Corporation: ASTM C 1177/1177M.

2. Type and Thickness: Type X, 5/8 inch (15.9 mm) thick.

3.02 FASTENERS

A. General: Provide fasteners of size and type indicated.

1. For wall sheathing panels, provide fasteners with corrosion-protective coating having a salt-spray resistance of more than 800 hours according to ASTM B 117.

3.03 SHEATHING JOINT-AND-PENETRATION TREATMENT MATERIALS

A. Sealant for Glass-Mat Gypsum Sheathing Board: Elastomeric silicone joint sealant recommended by sheathing manufacturer.

B. Air and Vapor Retarder Membrane

1. Grace Perm-A-Barrier® Wall Membrane or Approved Equal

3.04 MISCELLANEOUS MATERIALS

A. Flexible Flashing: Self-adhesive, rubberized-asphalt compound, bonded to a high-density, polyethylene film to produce an overall thickness of not less than 0.025 inch (0.6 mm).

PART 3 - EXECUTION

3.01 INSTALLATION, GENERAL

A. Securely attach to substrate by fastening as indicated, complying with the following:

1. NES NER-272 for power-driven fasteners.

2. Table 2304.9.1, "Fastening Schedule," in ICC's "International Building Code."

B. Coordinate sheathing installation with flashing and joint-sealant installation so these materials are installed in sequence and manner that exclude exterior moisture.

C. Do not bridge building expansion joints; cut and space edges of panels to match spacing of structural support elements.

3.02 GYPSUM SHEATHING INSTALLATION

A. Comply with GA-253 and with manufacturer's written instructions.

1. Fasten gypsum sheathing to cold-formed metal framing with screws.
2. Install boards with a 3/8-inch (9.5-mm) gap where non-load-bearing construction abuts structural elements.
3. Install boards with a 1/4-inch (6.4-mm) gap where they abut masonry or similar materials.

3.03 SHEATHING JOINT-AND-PENETRATION TREATMENT

A. Seal sheathing joints according to sheathing manufacturer's written instructions.

1. Apply elastomeric sealant to joints and fasteners and trowel flat. Seal other penetrations and openings.
2. Apply glass-fiber sheathing tape to glass-mat gypsum sheathing board joints, and apply and trowel silicone emulsion sealant to embed tape in sealant. Apply sealant to exposed fasteners. Seal other penetrations and openings.
3. Apply sheathing tape to joints between foam-plastic sheathing panels and at items penetrating sheathing. Apply at upstanding flashing to overlap both flashing and sheathing.

3.04 FLEXIBLE FLASHING INSTALLATION

A. Apply flexible flashing where indicated to comply with manufacturers written instructions.

1. Lap seams and junctures with other materials at least 4 inches (100 mm), except that at flashing flanges of other construction, laps need not exceed flange width.
2. Lap flashing over weather-resistant building paper at bottom and sides of openings.
3. Lap weather-resistant building paper over flashing at heads of openings.
4. After flashing has been applied, roll surfaces with a hard rubber or metal roller.

END OF SECTION

SECTION 06400
ARCHITECTURAL WOODWORK

PART 1 - GENERAL

1.01 SUMMARY: Work includes kitchen cabinets and window sills

1.02 RELATED WORK (Specified in other Sections)

A. Flush panel walk-thru doors

1.03 MINIMUM SPECIFICATIONS

"Quality Standards of the Architectural Woodwork Industry" (AWI)

1.04 REQUIRED SUBMITTALS (For selection, review, approval)

A. SHOP DRAWINGS: Indicate species, AWI Grade, construction details and location of each woodwork item

B. SAMPLES: Plastic laminate

PART 2 - PRODUCTS

2.01 APPROVED SUPPLIERS

A. LSI Corporation of America, Inc.

B. Taylor Division of American Desk Mfg. Co.

C. St. Charles Manufacturing Co.

D. Terrill Manufacturing Co.

E. Tru-Bilt

F. Case Systems

G. TMI, Dickinson

H. Wenger Corporation

I. Casework Services, Inc.

J. Timber Casework Manufacturing Company, Inc.

K. Keystone Millwork

2.02 PLASTIC LAMINATE

A. THICKNESS: .050" typical, except .030" for exposed vertical surfaces

B. LINER PANEL: .020" thick

C. BACKING SHEET: Thickness as recommended by AWI

D. EDGES: Self-edge unless shown or specified otherwise

E. PATTERN RANGE: Include all standard patterns and solid colors; to be selected by Architect

F. BRANDS: Submit two of the following, or others if approved by the Architect:

1. Wilsonart
2. Formica

3. Nevamar
4. Sterling Products, Inc., Pionite Division

2.03 SOLID STOCK

A. MOISTURE CONTENT: Percent of moisture in relation to oven-dry weight shall be between 8 to 13 percent at time of installation
B. KNOTS: Occasional pin knots permitted provided they are tight and smooth
C. PAINT GRADE SOFTWOOD: Ponderosa or white pine; finger-joints not permitted
D. PAINT GRADE HARDWOOD: Any close-grained species, including Parana Pine; oak, elm or similar coarse grain species not permitted
E. PRESERVATIVE TREATMENT: Pressure impregnated with water-borne CCA; .40 pcf retention; each piece marked with AWPA data including retention; for use at all cabinet bases.

2.04 SOFTWOOD PLYWOOD

A. GENERAL: Product Standard PS 1 marked with APA stamp; Douglas Fir; marked for exterior use; waterproof glue; no raised grain acceptable
B. PLIES:
    1. 3/4" MATERIAL: 7 ply
    2. 1-1/8" MATERIAL and THICKER: 9 ply
    3. FACE PLIES: Grade B or better
    4. INTERIOR PLIES: Grade C or better

2.05 CABINETS

DEFINITIONS:

A. EXPOSED: (Plastic laminate in thickness as specified) Surfaces visible when doors and drawers are closed; open cabinets, open shelves; bottom of upper cabinets; top and bottom of open shelving
B. SEMI-EXPOSED: (Liner Panel acceptable) Surfaces that become visible when drawers and opaque doors are opened; tops of cases 6 ft. 6 in. or more above floor; top and bottom of shelving behind doors; backs of hinged doors
C. CONCEALED: (Backing sheet acceptable) Surfaces permanently hidden after installation, such as the back side of cabinets against walls and underside of countertops

MATERIAL THICKNESS: The following thicknesses shall apply except when shown thicker on the Drawings:

A. PANELS, BOTTOMS, ENDS, DIVISIONS: 3/4" thick
B. BACKS: 3/8" particleboard, with continuous 1" x 4" hardwood or 3/4" X 4" plywood anchor cleat at top and bottom of wall hung cabinets

C. FACE PLATES: Equal to door thickness, 3/4" minimum

D. WEB FRAMES: 3/4" minimum

E. DRAWER FACES: 3/4"

F. DRAWER FRONTS, BACKS, SIDES: 1/2", solid light colored hardwood; sealed or cabinet liner finish, as selected

G. DRAWER BOTTOMS: 1/4" tempered hardboard; widths over 20" reinforced or greater thickness; cabinet liner finish

H. SHELVES (max. spans): 1" particleboard up to 24"; 1" plywood up to 30"; l-1/4" plywood 30" to 36"; 1-1/4" plywood with 1 x 3 solid hardwood edges over 36"

I. COUNTER TOPS: 1-1/4" – Laminated plastic color as approved

J. COUNTER TOP BACK AND END SPLASHES: 3/4"; same material as countertop

K. DOORS (less than 42" tall): 3/4"

L. DOORS (42" tall to 80" tall): 1"

DUST PANELS: Not required unless shown on the Drawings

BASES: Constructed of preservative treated solid lumber at all cabinets; toe space 3" deep and 4" high except when shown otherwise on Drawings; 1/2" deep recessed base across exposed ends. No "through to floor" panels or backs.

DOORS: Use overlay type, except where shown otherwise on Drawings; provide continuous .078" PVC edge banding, color to match plastic laminate or as selected.

DRAWERS: Tongue and groove joints at sides, front and back; dado sides to receive bottom; provide continuous .078" PVC edge banding at drawer face, color to match plastic laminate or as selected. Melamine white sheets approved.

SHELVES: All edges .078" thick beveled PVC edge banding; notched at ends to receive shelf standards; omit notching if optional drilled holes at 1-1/4" o.c. used. 070207.005 GCRBC

2.06 CABINET HARDWARE

A. SCOPE: Include hardware, preparation and installation

B. APPROVED SUPPLIERS/BRANDS: Those listed are approved; equal products of other well-known, nationally distributed suppliers subject to approval

C. SHELF SUPPORTS:

1. END STANDARDS: (Typical) KV 255ZC, surface mounted
2. SUPPORTS: KV 256 ZC
3. SUPPORTS (optional): KV 348 clips (white), for use with drilled holes 1-1/4" o.c.
4. WALL STANDARDS: KV 80 ANO
5. SHELF BRACKETS: KV 180 ANO

D. DOOR/DRAWER PULLS: Trimco 4" x 5/16" dia. x US26D dull chrome, hairpin shape, or Outwater Plastics, Inc., semi-flush ABS; one type throughout

E. DRAWER SLIDES: KV 8400; full extension, 3 sections; 100 lb. load

F. HINGES: (Heavy duty, exposed)

1. NUMBER: 2 per door less than 42" high; 3 per door 42" high to less than 72" high; 4 per door 72" high or more
2. TYPE: 2-3/4" five knuckles, tight pin, wrap around design, 270° swing, hospital tips
3. BRAND: Rockford Process Control, Inc. (RPC)
4. FINISH: Dull chrome

G. DOOR CATCHES: Magnetic, 10 lb. pull; Elbow catches at double doors

2.07 Window Sills

A. Plastic laminate window sills at all exterior windows. 3/4" exterior AC plywood with 1-1/2" face, 3/4" return ears beyond window opening, depth 3/4" more than wall depth, provide 3/8" x 5/8" painted pine apron.\

PART 3 - EXECUTION

3.01 INSTALLATION

A. POSITIONING: Place appropriately level, plumb and at right angles to adjacent work.

B. FITTING: Where field cutting or trimming is necessary, perform in a neat, accurate, professional manner without damaging the products or adjacent work.

C. ANCHORAGE: Attach securely so the products will perform to their maximum ability without damage resulting from inadequate fastenings.

D. FILLER PANELS: Provide matching fillers at cabinets, including bottom and tops of upper cabinets, where cabinets meet walls; widths as required.

E. SEALANT: Install clear silicone sealant at juncture with walls after wall is painted.

PART 4 - SCHEDULES

4.01 WORK SCHEDULE (All AWI Custom Grades, except as noted)

A. CABINETWORK:

1. EXPOSED SURFACES: Plastic laminate
2. SEMI-EXPOSED SURFACES: (Except inside drawers) Liner panel
3. CONCEALED SURFACES: Backing Sheet
4. DRAWER INTERIORS: Factory applied clear sealer, or liner panel, as selected
5. LOCATIONS: Typical

B. PLASTIC LAMINATE WORK: (Phenolic Core)

1. Cabinets and countertops at Breakroom

END OF SECTION

SECTION 07210
THERMAL INSULATION

PART 1 - GENERAL

1.01 SECTION INCLUDES

A. Batt insulation and vapor retarder in exterior wall construction.

B. Sound batt insulation.

C. Insulation support system for roof insulation.

D. Batt insulation for filling perimeter window and door shim spaces and crevices in exterior wall and roof.

1.02 RELATED SECTIONS

A. Section 09260 - Gypsum Board Assemblies: Acoustic insulation required for interior walls as noted on the drawings.

1.03 REFERENCES

A. ASTM C 665 - Standard Specification for Mineral-Fiber Blanket Thermal Insulation for Light Frame Construction and Manufactured Housing; 2001.

B. ASTM E 84 - Standard Test Method for Surface Burning Characteristics of Building Materials; 2004.

C. UL 723 - Underwritters Laboratory Fire Classification Ratings, current edition.

1.04 SUBMITTALS

A. See Section 01300 - Administrative Requirements, for submittal procedures.

B. Product Data: Provide data on product characteristics, performance criteria, and product limitations.

1.05 ENVIRONMENTAL REQUIREMENTS

A. Do not install insulation adhesives when temperature or weather conditions are detrimental to successful installation.

1.06 SEQUENCING

A. Sequence work to ensure fireproofing and firestop materials are in place before beginning work of this section.

PART 2 - PRODUCTS

2.01 BATT INSULATION MATERIALS

A. Batt Insulation: ASTM C 665; preformed glass fiber batt; friction fit, conforming to the following:

1. Thermal Resistance: R-30 and R-19, as scheduled.
2. Thickness: 10 inch and 6 inch.
3. Facing: Faced on one side with foil/scrim/kraft (FSK).
4. Surface Burning Characteristics: Flame spread/Smoke developed index of 25/50, when tested in accordance with ASTM E 84.

5. Manufacturers:
   a) CertainTeed Corporation: www.certainteed.com.
   b) Johns Manville Corporation: www.jm.com.
   c) Owens Corning Corp: www.owenscorning.com.
6. Insulation Support for roof insulation:
   a) Description:
      i. 1,000 denier polyester yarn interwoven on nominal 1/2-inch-square grid coated with fire-retardant, UV-stabilized, PVC-based binder.
      ii. Polypropylene tape bindings on all 4 edges.
         a) Two Edges that Attach to Building Eave Members: Reinforce with 1/4-inch-diameter polypropylene rope.
      iii. Furnish in building bay lengths by building widths.
         a) Cover 1 bay of building length.
         b) Extend eave-to-eave across building.
   b) Physical Properties:
      i. Tensile Strength (pounds/yarn):
         a) Machine Direction: 15 pounds.
         b) Cross Direction: 15 pounds.
      ii. Ends per Inch:
         a) Machine Direction: 2.5.
         b) Cross Direction: 2.0.
      iii. Weight: 0.28 to 0.32 ounces per sq ft
   c) Fasteners and Attachment Hardware:
      i. Connections to Eave Members: Steel strapping and self-drilling screws.
      ii. Mesh-to-Insulation Support System Edge Connections: Plastic cable ties.
   d) Fire-Hazard Classification:
      i. UL Fire-Hazard Classification Ratings, UL 723:
         a) Flame Spread: 15.
         b) Smoke Developed: 400.
7. Substitutions: See Section 01600 - Product Requirements.

PART 3 - EXECUTION

3.01 EXAMINATION

A. Verify that substrate, adjacent materials, and insulation materials are dry and that substrates are ready to receive insulation and adhesive.

B. Verify substrate surfaces are flat, free of honeycomb, fins, irregularities, or materials or substances that may impede adhesive bond.

3.02 BATT INSTALLATION

A. Install insulation in accordance with manufacturer's instructions.

B. Install vapor retarder on the warm side (exterior).

C. Install in exterior wall and roof spaces without gaps or voids. Do not compress insulation.

D. Trim insulation neatly to fit spaces. Insulate miscellaneous gaps and voids.

E. Fit insulation tightly in cavities and tightly to exterior side of mechanical and electrical services within the plane of the insulation.

F. Install sound batt insulation for interior walls as indicated on the drawings for sound proofing.

3.03 PROTECTION OF FINISHED WORK

A. Do not permit installed insulation to be damaged prior to its concealment.

3.04 SCHEDULES

A. Metal Framed Wall Insulation: 6 inch fiberglass batts with integral vapor barrier, taped to 6" metal studs.

B. Roof Insulation: 10 inch fiberglass batts with vapor barrier taped to purlins.

C. Sound Attenuation Fiberglass Batt at all interior metal stud walls.

END OF SECTION

SECTION 07542

TPO MECHANICALLY FASTENED ROOFING SYSTEM

PART 1 GENERAL

The project, 59th Street Pump Station located in Galveston, Texas includes the provision of a complete Firestone Building Products UltraPly™ TPO Mechanically Attached Membrane Roofing System.

1.01 SUMMARY

A. Furnish and install elastomeric sheet roofing system, including:
   1. Roofing manufacturer's requirements for the specified warranty.
   2. Preparation of roofing substrates.
   3. Wood nailers for roofing attachment.
   4. Insulation.
   5. Cover boards.
   6. Elastomeric membrane roofing.
   7. Metal roof edging and copings.
   8. Flashings.
   9. Walkway pads.
   10. Other roofing-related items specified or indicated on the drawings or otherwise necessary to provide a complete weatherproof roofing system.

B. Disposal of demolition debris and construction waste is the responsibility of Contractor. Perform disposal in manner complying with all applicable federal, state, and local regulations.

C. Comply with the published recommendations and instructions of the roofing membrane manufacturer, at http://manual.fsbp.com.

D. Commencement of work by the Contractor shall constitute acknowledgement by the Contractor that this specification can be satisfactorily executed, under the project conditions and with all necessary prerequisites for warranty acceptance by roofing membrane manufacturer. No modification of the Contract Sum will be made for failure to adequately examine the Contract Documents or the project conditions.

1.02 RELATED SECTIONS

A. Division 7

B. Division 15

1.03 REFERENCES

A. Referenced Standards: These standards form part of this specification only to the extent they are referenced as specification requirements.

B. ASTM C 1177/C 1177M - Standard Specification for Glass Mat Gypsum Substrate for Use as Sheathing; 2004.

C. ASTM C 1289 - Standard Specification for Faced Rigid Cellular Polyisocyanurate Thermal Insulation Board; 2004.

D. ASTM C 1549 - Standard Test Method for Determination of Solar Reflectance Near Ambient Temperature Using a Portable Solar Reflectometer; 2004.

E. ASTM D 638 - Standard Test Method for Tensile Properties of Plastics; 2003.

F. ASTM D 1004 - Standard Test Method for Initial Tear Resistance of Plastic Film and Sheeting; 2003.

G. ASTM D 3273 - Standard Test Method for Resistance to Growth of Mold on the Surface of Interior Coatings in an Environmental Chamber; 2000.

H. ASTM D 6878 - Standard Specification for Thermoplastic Polyolefin Based Sheet Roofing; 2003.

I. ASTM E 84 - Standard Test Method for Surface Burning Characteristics of Building Materials; 2005.

J. ASTM E 136 - Standard Test Method for Behavior of Materials in a Vertical Tube Furnace At 750 Degrees C; 2004.

K. FM 1-28 - Design Wind Loads; Factory Mutual System; 2002.

L. FM 1-29 - Roof Deck Securement and Above Deck Roof Components; Factory Mutual System; 2005.

M. PS 1 - Construction and Industrial Plywood; 1995.

N. PS 20 - American Softwood Lumber Standard; 2005.

O. SPRI ES-1 - Wind Design Standard for Edge Systems Used with Low Slope Roofing Systems; 2003. (ANSI/SPRI ES-1).

1.04 SUBMITTALS

A. Product Data:

1. Provide membrane manufacturer's printed data sufficient to show that all components of roofing system, including insulation and fasteners, comply with the specified requirements and with the membrane manufacturer's requirements and recommendations for the system type specified; include data for each product used in conjunction with roofing membrane.
2. Where UL or FM requirements are specified, provide documentation that shows that the roofing system to be installed is UL-Classified or FM-approved, as applicable; include data itemizing the components of the classified or approved system.
3. Installation Instructions: Provide manufacturer's instructions to installer, marked up to show exactly how all components will be installed; where instructions allow installation options, clearly indicate which option will be used.

B. Shop Drawings: Provide:

1. The roof membrane manufacturer's standard details customized for this project for all relevant conditions, including flashings, base tie-ins, roof edges, terminations, expansion joints, penetrations, and drains.

C. Pre-Installation Notice: Copy to show that manufacturer's required Pre Installation Notice (PIN) has been accepted and approved by the manufacturer.

D. Executed Warranty.

E. Specimen Warranty: Submit prior to starting work.

F. Samples: Submit samples of each product to be used.

1.05 QUALITY ASSURANCE

A. Applicator Qualifications: Roofing installer shall have the following:
   1. Current Firestone Master Contractor status.
   2. At least five years experience in installing specified system.

B. Pre-Installation Conference: Before start of roofing work, Contractor shall hold a meeting to discuss the proper installation of materials and requirements to achieve the warranty.
   1. Require attendance with all parties directly influencing the quality of roofing work or affected by the performance of roofing work.
   2. Notify Architect well in advance of meeting.

1.06 DELIVERY, STORAGE AND HANDLING

A. Deliver products in manufacturer's original containers, dry and undamaged, with seals and labels intact and legible.

B. Store materials clear of ground and moisture with weather protective covering.

C. Keep combustible materials away from ignition sources.

1.07 WARRANTY

A. Comply with all warranty procedures required by manufacturer, including notifications, scheduling, and inspections.

B. Warranty: Firestone 30 year Platinum Red Shield Limited Warranty covering membrane, roof insulation, and membrane accessories.

Warranty Duration	Membrane Thickness, required minimums
30 year	Only .080 UltraPly Platinum TPO

   1. Limit of Liability: No dollar limitation.
   2. Scope of Coverage: Repair leaks in the roofing system caused by:
      a. Ordinary wear and tear of the elements.
      b. Manufacturing defect in Firestone brand materials.
      c. Defective workmanship used to install these materials.
      d. Damage due to winds up to 130 mph.
   3. Not Covered:
      a. Damage due to winds in excess of 130 mph.
      b. Intentional damage.
      c. Unintentional damage due to normal rooftop inspections, maintenance, or service.

PART 2 PRODUCTS

2.01 MANUFACTURERS

A. Basis of Design Manufacturer - Roofing System: Firestone Building Products Co., Carmel, IN. www.firestonebpco.com.
   1. Roofing systems manufactured by others may be acceptable provided the roofing system is completely equivalent in materials and warranty conditions and the manufacturer meets the following qualifications:

a. Specializing in manufacturing the roofing system to be provided.
b. Minimum ten years of experience manufacturing the roofing system to be provided.
c. Able to provide a no dollar limit, single source roof system warranty
d. ISO 9002 certified.

B. Manufacturer of Insulation and Cover Board: Same manufacturer as roof membrane.

C. Manufacturer of Metal Roof Edging: Same manufacturer as roof membrane.
1. Metal roof edging products by other manufacturers are not acceptable.
2. Field- or shop-fabricated metal roof edgings are not acceptable.

D. Substitution Procedures: See Instructions to Bidders.
1. Submit evidence that the proposed substitution complies with the specified requirements.

2.02 ROOFING SYSTEM DESCRIPTION

A. Roofing System:
1. Membrane: Thermoplastic Polyolefin (TPO).
2. Thickness: As specified elsewhere.
3. Membrane Attachment: Mechanically attached.
4. Slope: Deck is sloped but not enough; provide additional slope of 1/4 inch per foot (1:48) by means of tapered insulation.
5. Comply with applicable local building code requirements.
6. Provide assembly having Underwriters Laboratories, Inc. (UL) Class A Fire Hazard Classification.
7. Product is Texas Department of Insurance Windstorm Certified to meet Design Pressures of The Project.

B. Insulation:
1. Total System R Value: 30, minimum.
2. Maximum Board Thickness: 2 inches (50 mm); use as many layers as necessary; stagger joints in adjacent layers.

System R Value	Total Iso Insulation Thickness, nominal
30 R	5 inches

3. Base Layer: Polyisocyanurate foam board, non-composite.
   a. Attachment: Mechanical through fastening.
4. Top Layer: Polyisocyanurate foam board, non-composite.
   a. Attachment: Mechanical through fastening.
5. Tapered Insulation: Provide tapered insulation to maintain 1/4" / ft. roof slope.

C. Cover Board: High Density Polyisocyanurate Cover Board:
1. Thickness: 0.5 inch (12.7mm).
2. R-Value: 2.5 based on ASTM tests C158 and C177.
   a. Attachment: Mechanical through fastening.

2.03 TPO MEMBRANE MATERIALS

A. Membrane: Flexible, heat weldable sheet composed of thermoplastic polyolefin

polymer and ethylene propylene rubber; complying with ASTM D 6878, with polyester weft inserted reinforcement and the following additional characteristics:

1. Thickness: 0.060 inch (1.52 mm) plus/minus 10 percent, with coating thickness over reinforcement of 0.024 inch (0.61 mm) plus/minus 10 percent.
2. Puncture Resistance: 265 lbf (1174 N), minimum, when tested in accordance FTM 101C Method 2031.
3. Solar Reflectance: 0.79, minimum, when tested in accordance with ASTM C 1549.
4. Color: White
5. Acceptable Product: UltraPly TPO by Firestone.

B. Membrane Fasteners: Type and size as required by roof membrane manufacturer for roofing system and warranty to be provided; use only fasteners furnished by roof membrane manufacturer.

C. Curb and Parapet Flashing: Same material as membrane, with encapsulated edge which eliminates need for seam sealing the flashing-to-roof splice; precut to 18 inches (457 mm) wide.

D. Formable Flashing: Non-reinforced, flexible, heat weldable sheet, composed of thermoplastic polyolefin polymer and ethylene propylene rubber.

1. Thickness: 0.060 inch (1.52 mm) plus/minus 10 percent.
2. Tensile Strength: 1550 psi (10.7 MPa), minimum, when tested in accordance with ASTM D 638 after heat aging.
3. Elongation at Break: 650 percent, minimum, when tested in accordance with ASTM D 638 after heat aging.
4. Tearing Strength: 12 lbf (53 N), minimum, when tested in accordance with ASTM D 1004 after heat aging.
5. Color: Same as field membrane.
6. Acceptable Product: UltraPly TPO Flashing by Firestone.

E. Tape Flashing: 5-1/2 inch (140 mm) nominal wide TPO membrane laminated to cured rubber polymer seaming tape, overall thickness 0.065 inch (1.6 mm) nominal; TPO QuickSeam Flashing by Firestone.

F. Pourable Sealer: Two-part polyurethane, two-color for reliable mixing; Pourable Sealer by Firestone.

G. Seam Plates: Steel with barbs and Galvalume coating; corrosion-resistance complying with FM 4470.

H. Termination Bars: Aluminum bars with integral caulk ledge; 1.3 inches (33 mm) wide by 0.10 inch (2.5 mm) thick; Firestone Termination Bar by Firestone.

I. Cut Edge Sealant: Synthetic rubber-based, for use where membrane reinforcement is exposed; UltraPly TPO Cut Edge Sealant by Firestone.

J. General Purpose Sealant: EPDM-based, one part, white general purpose sealant; UltraPly TPO General Purpose Sealant by Firestone.

K. Molded Flashing Accessories: Unreinforced TPO membrane pre-molded to suit a variety of flashing details, including pipe boots, inside corners, outside corners, etc.; UltraPly TPO Small and Large Pipe Flashing by Firestone.

L. Roof Walkway Pads: Non-reinforced TPO walkway pads, 0.130 inch (3 mm) by 30 inches (760 mm) by 40 feet (12.19 m) long with patterned traffic bearing surface; UltraPly TPO Walkway Pads by Firestone.

2.04 ROOF INSULATION AND COVER BOARDS

A. Polyisocyanurate Board Insulation: Closed cell polyisocyanurate foam with black glass reinforced mat laminated to faces, complying with ASTM C 1289 Type II Class 1, with the following additional characteristics:
   1. Thickness: As indicated elsewhere.
   2. Size: 48 inches (1220 mm) by 96 inches (2440 mm), nominal.
      a. Exception: Insulation to be attached using adhesive or asphalt may be no larger than 48 inches (1220 mm) by 48 inches (1220 mm), nominal.
   3. R-Value (LTTR): 1.0 inch (25 mm) Thickness: 6.0, minimum.
   4. Compressive Strength: 20 psi (138 kPa) when tested in accordance with ASTM C 1289.
   5. Ozone Depletion Potential: Zero; made without CFC or HCFC blowing agents.
   6. Recycled Content: 19 percent post-consumer and 15 percent post-industrial, average.
   7. Acceptable Product: ISO 95+ polyiso board insulation by Firestone

B. High Density Polyisocyanurate Cover Board: Non-combustible, water resistant high density, closed cell polyisocyanurate core with coated glass mat facers, complying with ASTM D 1623, and with the following additional characteristics:
   1. Size: 48 inches (1220 mm) by 96 inches (2440 mm), nominal.
      a. Exception: Board to be attached using adhesive or asphalt may be no larger than 48 inches (1220 mm) by 48 inches (1220 mm), nominal.
   2. Thickness: 0.5 inch (12.7mm).
   3. R-Value: 2.5 based on ASTM tests C158 and C177.
   4. Surface Water Absorption: <3%, maximum, when tested in accordance with ASTM C 209.
   5. Compressive Strength: 120psi, when tested in accordance with ASTM 1621.
   6. Density: 5pcf, when tested in accordance with ASTM 1622.
   7. Factory Mutual approved for use with FM 1-60 and 1-90 rated roofing assemblies.
   8. Mold Growth Resistance: Passed, when tested in accordance with ASTM D 3273.
   9. Acceptable Product: ISOGARD HD Cover Board by Firestone.

C. Insulation Fasteners: Type and size as required by roof membrane manufacturer for roofing system and warranty to be provided; use only fasteners furnished by roof membrane manufacturer.

2.05 METAL ACCESSORIES

A. Metal Roof Edging and Fascia: Continuous metal edge member serving as termination of roof membrane and retainer for metal fascia; watertight with no exposed fasteners; mounted to roof edge nailer.
   1. Wind Performance:
      a. Membrane Pull-Off Resistance: 100 lbs/ft (1460 N/m), minimum, when tested in accordance with ANSI/SPRI ES-1 Test Method RE-1, current edition.
      b. Fascia Pull-Off Resistance: At least the minimum required when tested in accordance with ANSI/SPRI ES-1 Test Method RE-2, current edition.
      c. Provide product listed in current Factory Mutual Research Corporation Approval Guide with at least FM 1-270 rating.
   3. Fascia Face Height: As Shown on Drwings
   4. Edge Member Height Above Nailer: 1-1/4 inches (31 mm).
   5. Length: 144 inches (3650 mm).

6. Functional Characteristics: Fascia retainer supports while allowing for free thermal cycling of fascia.
7. Aluminum Bar: Continuous 6063-T6 alloy aluminum extrusion with pre-punched slotted holes; miters welded; injection molded EPDM splices to allow thermal expansion.
8. Anchor Bar Cleat: 20 gage, 0.036 inch (0.9 mm) G90 coated commercial type galvanized steel with pre-punched holes.
9. Curved Applications: Factory modified.
10. Fasteners: Factory-provided corrosion resistant fasteners, with drivers; no exposed fasteners permitted.
11. Special Shaped Components: Provide factory-fabricated pieces necessary for complete installation, including miters, scuppers, and end caps; minimum 14 inch (355 mm) long legs on corner pieces.
12. Scuppers: Welded watertight.
13. Accessories: Provide matching extenders, and other special fabrications as shown on the drawings.

2.06 ACCESSORY MATERIALS

A. Wood Nailers: PS 20 dimension lumber, Structural Grade No. 2 or better Southern Pine, Douglas Fir; or PS 1, APA Exterior Grade plywood; pressure preservative treated.
   1. Width: 3-1/2 inches (90 mm), nominal minimum, or as wide as the nailing flange of the roof accessory to be attached to it.
   2. Thickness: Same as thickness of roof insulation.

PART 3 INSTALLATION

3.01 GENERAL

A. Install roofing, insulation, flashings, and accessories in accordance with roofing manufacturer's published instructions and recommendations for the specified roofing system. Where manufacturer provides no instructions or recommendations, follow good roofing practices and industry standards. Comply with federal, state, and local regulations.

B. Obtain all relevant instructions and maintain copies at project site for duration of installation period.

C. Do not start work until Pre-Installation Notice has been submitted to manufacturer as notification that this project requires a manufacturer's warranty.

D. Perform work using competent and properly equipped personnel.

E. Temporary closures, which ensure that moisture does not damage any completed section of the new roofing system, are the responsibility of the applicator. Completion of flashings, terminations, and temporary closures shall be completed as required to provide a watertight condition.

F. Install roofing membrane only when surfaces are clean, dry, smooth and free of snow or ice; do not apply roofing membrane during inclement weather or when ambient conditions will not allow proper application; consult manufacturer for recommended procedures during cold weather. Do not work with sealants and adhesives when material temperature is outside the range of 60 to 80 degrees F (15 to 25 degrees C).

G. Protect adjacent construction, property, vehicles, and persons from damage related to

roofing work; repair or restore damage caused by roofing work.

1. Protect from spills and overspray from bitumen, adhesives, sealants and coatings.
2. Particularly protect metal, glass, plastic, and painted surfaces from bitumen, adhesives, and sealants within the range of wind-borne overspray.
3. Protect finished areas of the roofing system from roofing related work traffic and traffic by other trades.

H. Until ready for use, keep materials in their original containers as labeled by the manufacturer.

I. Consult membrane manufacturer's instructions, container labels, and Material Safety Data Sheets (MSDS) for specific safety instructions. Keep all adhesives, sealants, primers and cleaning materials away from all sources of ignition.

3.02 EXAMINATION

A. Examine roof deck to determine that it is sufficiently rigid to support installers and their mechanical equipment and that deflection will not strain or rupture roof components or deform deck.

B. Verify that surfaces and site conditions are ready to receive work. Correct defects in the substrate before commencing with roofing work.

C. Examine roof substrate to verify that it is properly sloped to drains.

D. Verify that the specifications and drawing details are workable and not in conflict with the roofing manufacturer's recommendations and instructions; start of work constitutes acceptable of project conditions and requirements.

3.03 PREPARATION

A. Take appropriate measures to ensure that fumes from adhesive solvents are not drawn into the building through air intakes.

B. Prior to proceeding, prepare roof surface so that it is clean, dry, and smooth, and free of sharp edges, fins, roughened surfaces, loose or foreign materials, oil, grease and other materials that may damage the membrane.

C. Fill all surface voids in the immediate substrate that are greater than 1/4 inch (6 mm) wide with fill material acceptable insulation to membrane manufacturer.

D. Seal, grout, or tape deck joints, where needed, to prevent bitumen seepage into building.

3.04 INSULATION AND COVER BOARD INSTALLATION

A. Install insulation in configuration and with attachment method(s) specified in PART 2, under Roofing System.

B. Install only as much insulation as can be covered with the completed roofing system before the end of the day's work or before the onset of inclement weather.

C. Lay roof insulation in courses parallel to roof edges.

D. Neatly and tightly fit insulation to all penetrations, projections, and nailers, with gaps not greater than 1/4 inch (6 mm). Fill gaps greater than 1/4 inch (6 mm) with acceptable insulation. Do not leave the roofing membrane unsupported over a space greater than 1/4 inch (6 mm).

E. Mechanical Fastening: Using specified fasteners and insulation plates engage fasteners through insulation into deck to depth and in pattern required by Factory Mutual for FM Class specified in PART 2 and membrane manufacturer, whichever is more stringent.

3.05 SINGLE-PLY MEMBRANE INSTALLATION

A. Beginning at low point of roof, place membrane without stretching over substrate and allow to relax at least 30 minutes before attachment or splicing; in colder weather allow for longer relax time.

B. Lay out the membrane pieces so that field and flashing splices are installed to shed water.

C. Install membrane without wrinkles and without gaps or fishmouths in seams; bond and test seams and laps in accordance with membrane manufacturer's instructions and details.

D. Install membrane mechanically attached to the substrate using fasteners and edge securement as specified and as required by membrane manufacturers.

E. Mechanical Attachment: Install fasteners in the seams, covered by membrane.
   1. Lay out fasteners in compliance with FM Class specified in PART 2, as recommended by membrane manufacturer, and as indicated, whichever is most stringent.
   2. Properly engage fasteners in the deck with head flush with the countersunk portion of seam plate.

F. Edge Securement: Secure membrane at all locations where membrane terminates or goes through an angle change greater than 2 in 12 inches (1:6) using mechanically fastened reinforced perimeter fastening strips, plates, or metal edging as indicated or as recommended by roofing manufacturer.
   1. Exceptions: Round pipe penetrations less than 18 inches (460 mm) in diameter and square penetrations less than 4 inches (200 mm) square.
   2. Metal edging is not merely decorative; ensure anchorage of membrane as intended by roofing manufacturer.

3.06 FLASHING AND ACCESSORIES INSTALLATION

A. Install flashings, including laps, splices, joints, bonding, adhesion, and attachment, as required by membrane manufacturer's recommendations and details.

B. Metal Accessories: Install metal edgings, gravel stops, and copings in locations indicated on the drawings, with horizontal leg of edge member over membrane and flashing over metal onto membrane.
   1. Follow roofing manufacturer's instructions.
   2. Remove protective plastic surface film immediately before installation.
   3. Install water block sealant under the membrane anchorage leg.
   4. Flash with manufacturer's recommended flashing sheet unless otherwise indicated.
   5. Where single application of flashing will not completely cover the metal flange, install additional piece of flashing to cover the metal edge.
   6. If the roof edge includes a gravel stop and sealant is not applied between the laps in the metal edging, install an additional piece of self-adhesive flashing membrane over the metal lap to the top of the gravel stop; apply seam edge treatment at the intersections of the two flashing sections.

7. When the roof slope is greater than 1:12, apply seam edge treatment along the back edge of the flashing.

C. Scuppers: Set in sealant and secure to structure; flash as recommended by manufacturer.

D. Roofing Expansion Joints: Install as shown on drawings and as recommended by roofing manufacturer.

E. Flashing at Walls, Curbs, and Other Vertical and Sloped Surfaces: Install weathertight flashing at all walls, curbs, parapets, curbs, skylights, and other vertical and sloped surfaces that the roofing membrane abuts to; extend flashing at least 8 inches (200 mm) high above membrane surface.
   1. Use the longest practical flashing pieces.
   2. Evaluate the substrate and overlay and adjust installation procedure in accordance with membrane manufacturer's recommendations.
   3. Complete the splice between flashing and the main roof sheet with specified splice adhesive before adhering flashing to the vertical surface.
   4. Provide termination directly to the vertical substrate as shown on roof drawings.

F. Flashing at Penetrations: Flash all penetrations passing through the membrane; make flashing seals directly to the penetration.
   1. Pipes, Round Supports, and Similar Items: Flash with specified pre-molded pipe flashings wherever practical; otherwise use specified self-curing elastomeric flashing.
   2. Pipe Clusters and Unusual Shaped Penetrations: Provide penetration pocket at least 2 inches (50 mm) deep, with at least 1 inch (25 mm) clearance from penetration, sloped to shed water.
   3. Structural Steel Tubing: If corner radii are greater than 1/4 inch (6 mm) and longest side of tube does not exceed 12 inches (305 mm), flash as for pipes; otherwise, provide a standard curb with flashing.
   4. Flexible and Moving Penetrations: Provide weathertight gooseneck set in sealant and secured to deck, flashed as recommended by manufacturer.

3.07 FINISHING AND WALKWAY INSTALLATION

A. Install walkways at access points to the roof, around rooftop equipment that may require maintenance, and where indicated on the drawings.

B. Walkway Pads: Adhere to the roofing membrane, spacing each pad at minimum of 1.0 inch (25 mm) and maximum of 3.0 inches (75 mm) from each other to allow for drainage.
   1. If installation of walkway pads over field fabricated splices or within 6 inches (150 mm) of a splice edge cannot be avoided, adhere another layer of flashing over the splice and extending beyond the walkway pad a minimum of 6 inches (150 mm) on either side.
   2. Prime the membrane, remove the release paper on the pad, press in place, and walk on pad to ensure proper adhesion.

3.08 FIELD QUALITY CONTROL

A. Inspection by Manufacturer: Provide final inspection of the roofing system by a Technical Representative employed by roofing system manufacturer specifically to inspect installation for warranty purposes (i.e. not a sales person).

B. Perform all corrections necessary for issuance of warranty.

3.09 CLEANING

A. Clean all contaminants generated by roofing work from building and surrounding areas, including bitumen, adhesives, sealants, and coatings.

B. Repair or replace building components and finished surfaces damaged or defaced due to the work of this section; comply with recommendations of manufacturers of components and surfaces.

C. Remove leftover materials, trash, debris, equipment from project site and surrounding areas.

3.10 PROTECTION

A. Where construction traffic must continue over finished roof membrane, provide durable protection and replace or repair damaged roofing to original condition.

END OF SECTION

SECTION 07600

ROOF FLASHING AND SHEET METAL

PART 1 - GENERAL

1.01 SCOPE OF WORK:

A. Flashing and sheet metal required to prevent penetration of water through the exterior

1.02 RELATED SECTIONS

A. Drawing and general provisions of the Contract, including General Supplementary Conditions and Division 1 Specification Sections, Apply to this Section.

B. RELATED SECTIONS

1. Division 6 Section "Rough Carpentry" for wood blocking and nails.

1.03 REFERENCES

ASTM A-446 Specification for steel sheet

ASTM B-209 Specification for aluminum sheet

ASTM B-221 Specification for aluminum extruded shape

FS QQ-L-201 Specification for Lead Sheet

ASTM A792 Steel Sheet, Aluminum-Zinc Alloy-Coated, by the Hot-Dip Process

ASTM B32 Solder Metal

ASTM B209 Aluminum and Alloy Sheet and Plate

ASTM B486 Paste Solder

ASTM D226 Asphalt-Saturated Organic Felt Used in Roofing and Waterproofing

ASTM D486 Asphalt Roof Cement, Asbestos-free

FS O-F-506 Flux, Soldering, Paste and Liquid

WH Warnock Hersey International, Inc. Middleton, WI.

FMLoss Prevention Data Sheet

NRCA National Roofing Contractors Association - Roofing Manual

SMACNA Architectural Sheet Metal Manual

1.04 SUBMITTALS

A. Submit under provisions of Section 01300 - Submittals.

B. Product Data: Provide manufacturer's specification data sheets for each product in accordance with Section 01300.

C. Provide approval letters from metal manufacturer for use of their metal within this particular roofing system type.

D. Shop Drawings

1. For manufactured and shop fabricated gravel stops, fascia, scuppers, and all other sheet metal fabrications.

2. Shop drawings: Indicate material profile, jointing pattern, jointing details, fastening methods, flashing, termination's, and installation details.
3. Indicate type, gauge and finish of metal.

E. Certification

1. Submit roof manufacturer's certification that metal furnished is acceptable to roofing manufacturer as a component of roofing system and is eligible for roof manufacturer's system warranty.
2. Submit certification that metal and fastening system furnished is Tested and Approved by Texas Windstorm.

F. Manufacturer's Product Data

1. Metal material characteristics and installation recommendations.
2. Submit color chart prior to material ordering and/or fabrication so that equivalent colors to those specific can be approved.

1.05 QUALITY CONTROL

A. Reference Standards

1. Comply with details and recommendations of SMACNA Manual for workmanship, methods of joining, anchorage, provisions for expansion, etc.
2. Factory Mutual Loss Prevention Data Sheet 1-49 windstorm resistance 1-90.

B. Manufacturer's Warranty

1. Pre-finished metal material shall require a written 20-year non-prorated warranty covering fade, chalking and film integrity. The material shall not show a color change greater than 5 NBS color units per ASTM D-2244 or chalking excess of 8 units per ASTM D-659. If either occurs material shall be replaced per warranty, at no cost to the Owner.

C. Contractor's Warranty

1. The Contractor shall provide the Owner with a notarized written warranty assuring that all sheet metal work including caulking and fasteners to be watertight and secure for a period of two years from the date of final acceptance of the building. Warranty shall include all materials and workmanship required to repair any leaks that develop, and make good any damage to other work or equipment caused by such leaks or the repairs thereof.

1.06 QUALIFICATIONS

A. Fabricator and Installer: Company specializing in sheet metal flashing work with 5 years experience.

1.07 DELIVERY, STORAGE, AND HANDLING

A. Deliver materials in manufacturer's original, unopened containers or packages with labels intact and legible.

B. Stack performed and pre-finished material to prevent twisting, bending, or abrasion, and to provide ventilation. Slope metal sheets to ensure drainage.

C. Prevent contact with materials which may cause discoloration or staining.

PART 2 - PRODUCTS

2.01 APPROVED EQUIVALENT

A. Contractor must submit any product not specified a minimum ten days before the bid date to Architect in order for product to be considered for approval. The Owner will notify Contractor, in writing, of decision to accept or reject request.

2.02 MATERIALS

A. Where sheet metal is required and no material or gauge is indicated, furnish and install the highest quality and gauges commensurate wiyh referenced standards. Metal system is to be comprised of minimum Galvalume steel coated on both sides with an epoxy primer and on the weathering surface with a polyvinylidene fluoride coated finish.

1. Counterflashings: Stainless Steel Sheet: Type 316, ASTM A167, 24 gage, (0.015"), annealed except dead soft where fully concealed by other work, 2D (dull) finish.
2. Pitch Pans, Bonnets, Curb Caps, and Pipe Hoods: Stainless Steel Sheet: Ty316, ASTM A167, 24 gage, (0.015"), annealed except dead soft where fully concealed by other work, 2D (dull) finish.
3. Cover Plates: Type 316, ASTM A167, 24 gage, (0.015"), annealed except dead soft where fully concealed by other work, 2D (dull) finish.
4. Gravel Guard: Type 316, ASTM A167, 22 gage, (0.015"), "), annealed except dead soft where fully concealed by other work, 2D (dull) finish. Continuous cleat shall be 22 gauge.
5. Cap Flashing (Coping): Stainless Steel Sheet: Type 316, ASTM A167, 22 gage, (0.015"), annealed except dead soft where fully concealed by other work, 2D (dull) finish. Continuous cleats shall be 22 gauge.
6. Lead Flashings: Sheet complying with FS QQ-L-201. Grade B; formed from commondesilvered pig lead complying with ASTM B-29. Weight 4.0 lbssq/ft unless otherwise specified.
7. Termination Bar: Material shall be .125” x 1” (minimum) aluminum conforming to ASTM B-221, mill finish.

2.03 RELATED MATERIALS

A. Metal Primer: Zinc chromate type.

B. Plastic Cement: ASTM D 4586

C. Sealant: Specified in Section 07900 or on drawings.

D. Lead: Meets Federal Specification QQ-L-201, Grade B, four pounds per square foot.

E. Solder: ANSI/ASTM B32; 95/05 type.

F. Flux: FS O-F-506.

G. G. Underlayment: waterproofing membrane or self adhering waterproofing membrane.

H. Slip Sheet: Rosin sized building paper.

I. Fasteners:

1. Corrosion resistant screw fastener as recommended by metal manufacturer. Finish
2. exposed fasteners same as flashing metal.

3. Fastening shall conform to Texas Windstorm or as stated on section details, whichever is more stringent.

PART 3 - EXECUTION

3.01 PROTECTION

A. Protect contact areas of dissimilar metals with heavy asphalt or other approved coating, specifically made to stop electrolytic action.

3.02 GENERAL

A. Install work watertight, without waves, warps, buckles, fastening stress, or distortion, allowing for expansion and contraction.

B. Fastening of metal to walls and wood blocking shall comply with SMACNA Architectural Sheet Metal Manual, Texas Windstorm wind uplift specifications and/or manufacturer's recommendations whichever is of the highest standard.

C. All accessories or other items essential to the completeness of sheet metal installation, whether specifically indicated or not, shall be provided and of the same material as item to which applied.

D. Metal fascia and copings shall be secured to wood nailers at the bottom edge with a continuous cleat. Cleats shall be at least one gauge heavier than the metal it secures.

3.03 INSPECTION

A. Verify roof openings, curbs, pipes, sleeves, ducts, or vents through roof are solidly set, cant strips and reglets are in place, and nailing strips located.

B. Verify membrane termination and base flashings are in place, sealed, and secure.

C. Beginning of installation means acceptance of existing conditions.

D. Field measure site conditions prior to fabricating work.

3.04 MANUFACTURED SHEET METAL SYSTEMS

A. Installing Contractor shall be responsible for determining if the sheet metal systems are in general conformance with roof manufacturer's recommendations.

B. Furnish and install manufactured sheet metal systems in strict accordance with manufacturer's printed instructions.

C. Provide all factory-fabricated accessories including, but not limited to, fascia extenders, miters, scuppers, joint covers, etc.

3.05 SHOP FABRICATED SHEET METAL

A. Installing Contractor shall be responsible for determining if the sheet metal systems are in general conformance with roof manufacturer's recommendations.

B. Metal work shall be shop fabricated to configurations and forms in accordance with recognized sheet metal practices.

C. Hem exposed edges.

D. Angle bottom edges of exposed vertical surfaces to form drip.

E. All corners for sheet metal shall be lapped with adjoining pieces fastened and set in sealant.

F. Joints for gravel stop fascia system, cap flashing, and surface-mount counterflashing shall be formed with a 1/4” opening between sections. The opening shall be covered by a cover plate or backed by an internal drainage plate formed to the profile of fascia piece. The cover plate shall be embedded in mastic, fastened through the opening between the sections and loose locked to the drip edges.

G. Install sheet metal to comply with Architectural Sheet Metal manual, Sheet Metal and Air Conditioning Contractor's National Associations, Inc.

3.06 FLASHING MEMBRANE INSTALLATION

A. SCUPPER

1. Install scupper box in a 1/4" bed of mastic. Assure all box seams are soldered and have a minimum 4" flange. Make sure all corners are closed and soldered.
2. Prime metal edge at a rate of 100 square feet per gallon and allow to dry.

B. PLUMBING STACK

1. Prime flange and sleeve at a rate of 100 square feet per gallon and allow to dry.
2. Install properly sized sleeves in a 1/4" bed of elastomeric sealant.
3. Turn sleeve a minimum of 1" down inside of stack.
4. Caulk intersection of the membrane and flange with elastomeric sealant.

END OF SECTION

SECTION 07650

FLEXIBLE FLASHING

PART 1 — GENERAL

1.01 RELATED DOCUMENTS

A. Drawings and general provisions of the Contract, including General and Supplementary Conditions and Division 1 Specification Sections, apply to this Section.

B. Section 042000 – Unit Masonry.

1.02 SUMMARY

A. Section provides for a flexible rubberized asphalt, self-sealing through-wall flashing and wall flashing accessories.

1.03 REFERENCES

A. American Society for Testing and Materials

1. ASTM E96 – Test Methods for Water Vapor Transmission of Materials
2. ASTM D570 – Test Method for Water Absorption of Plastics
3. ASTM E154 – Test Method for Water Vapor Retarders used in contact with Earth Under Concrete Slabs, on Walls or as Ground Cover
4. ASTM D1004 – Test Method for Initial Tear Resistance of Plastic Film and Sheeting
5. ASTM D1938 – Test Method for Tear Propagation Resistance of Plastic Film and Thin Sheeting by a Single-Tear Method
6. ASTM D1876 – Test Method for Peel Resistance of Adhesives
7. ASTM D1970 – Standard Specifications for Self-Adhering Polymer Modified Bituminous Sheet Materials Used as Steep Roofing Underlayment for Ice Dam Protection
8. D412 – Test Methods for Vulcanized Rubber & Thermoplastic Rubbers and Thermoplastic Elastomers – Tension

1.04 SUBMITTALS

A. Product Data and Shop Drawings: Submit for each product; Spec-Data®/Data Sheets, details and installation procedures.

B. Test Reports: Indicating compliance with the performance requirements of this section.

C. Samples of flashing.

1.05 DELIVERY, STORAGE, AND HANDLING

A. Comply with manufacturer's recommendations for storage and handling of each product.

1.06 WARRANTY

A. Standard Product Warranty:

1. Submit manufacturer's warranty that flashing and accessories are free of defects at time of delivery, and are manufactured to meet manufacturer's published physical properties and material specifications.

2. Warranty Period: Five years from date of completion of the flashing installation.
3. Installer to warrant that flashing and accessories have been installed in accordance with manufacturer's recommendations.

PART 2 — PRODUCTS

2.01 MATERIALS

A. Flashing Description: 0.8 mm (32 mils) of self-adhesive rubberized asphalt integrally bonded to 0.2 mm (8 mils) of cross-laminated, high-density polyethylene film to provide a min. 1.0 mm (40 mil) thick membrane. Membrane shall be interleaved with disposable silicone-coated release paper until installed.

B. Performance Requirements:

1. Water Vapor Transmission: ASTM E96, Method B – 2.9 ng/m2sPa (0.05 perms) maximum
2. Water Absorption: ASTM D570 – Max. 0.1% by weight
3. Puncture Resistance: ASTM E154 – 356 N (80 lbs)
4. Tear Resistance:
   a) Initiation – ASTM D1004 – min. 58 N (13.0 lbs) M.D.
   b) Propagation – ASTM D1938 – min. 40 N (9.0 lbs) M.D.
5. Lap Adhesion at -4ºC (25ºF): ASTM D1876 – 880 N/M (5.0 lbs/in.) of width
6. Low Temperature Flexibility – ASTM D1970 – Unaffected to -43ºC (-45ºF)
7. Tensile Strength: ASTM D412, Die C Modified – Min. 5.5 MPa (800 psi)
8. Elongation, Ultimate Failure of Rubberized Asphalt: ASTM D412, Die C – Min. 200%

C. Wall Flashing Accessories:

4. Primer:
   a) Description: Water-based primer which imparts an aggressive, high tack finish on the treated substrate.
      (1.) Flash Point: No flash to boiling point
      (2.) Solvent Type: Water
      (3.) (VOC Content: Not to exceed 10 g/L
      (4.) Application Temperature: -4ºC (25ºF) and above
      (5.) Freezing point (as packaged): -7ºC (21ºF)
5. Termination Mastic:
   a) Description: Rubberized asphalt-based mastic with 200 g/L max. VOC Content.
6. Optional Primer:
   a) Description: Rubber-based primer in solvent.440 g/L max. VOC content.

PART 3 — EXECUTION

3.01 EXAMINATION

A. Examine conditions, with installer present, for compliance with requirements for installation, tolerances and other specific conditions affecting performance of flashing. Remove all deleterious materials from surfaces to be flashed.

3.02 INSTALLATION

A. General: Install flashing to dry surfaces at air and surface temperatures of -4ºC (25ºF) and above in accordance with manufacturer's recommendations at locations indicated on Construction Documents.

B. Flexible Wall Flashing:

1. Precut pieces of flashing to easily handled lengths for each location.
2. Remove silicone-coated release paper and position flashing carefully before placing it against the surface.
3. When properly positioned, place against surface by pressing firmly into place by hand roller. Fully adhere flashing to substrate to prevent water from migrating under flashing.
4. Overlap adjacent pieces 50 mm (2 in.) and roll all seams with a steel hand roller.
5. Trim bottom edge 13 mm (1⁄2 in.) back from exposed face of the wall. Flashing shall not be permanently exposed to sunlight.
6. At heads, sills and all flashing terminations turn up ends a minimum of 50 mm (2 in.) and make careful folds to form an end dam, with the seams sealed.
7. Do not allow the rubberized asphalt surface of the flashing membrane to come in contact with polysulfide sealants, creosote, uncured coal tar products or EPDM.
8. Do not expose flashing membrane to sunlight for more than thirty days prior to enclosure.

C. Accessories:

1. When required by dirty or dusty site conditions or by surfaces having irregular or rough texture, apply Primer by air spray, brush or roller at the rate recommended by manufacturer, prior to flashing installation. Allow the primer to dry completely before flashing application.
2. Apply a bead or trowel coat of mastic along flashing top edge, seams, cuts, and penetrations.
3. Apply primer by brush or heavy nap, natural-material roller at rate recommended by manufacturer prior to flashing installation. Allow primer to dry completely before flashing application.

END OF SECTION

SECTION 07840

FIRESTOPPING

PART 1- GENERAL

1.01 SECTION INCLUDES

A. Firestopping for through-penetrations and construction gaps, including the following:

1. Openings in fire rated walls, floors, and roofs, both empty and those containing penetrations such as cables, conduits, cable trays, pipes, ducts, and similar penetrating items.
2. Gaps between the tops of fire rated walls and underside of fire rated floor or roof assemblies.

B. See Definitions.

1.02 REFERENCES

C. ASTM E 84 - Standard Test Method for Surface Burning Characteristics of Building Materials; 2001.

D. ASTM E 119 - Standard Test Methods for Fire Tests of Building Construction and Materials; 2000a.

E. ASTM E 814 - Standard Test Method for Fire Tests of Through-Penetration Fire Stops; 2002.

F. ASTM E 1399 - Standard Test Method for Cyclic Movement and Measuring the Minimum and Maximum Joint Widths of Architectural Joint Systems; 1997 (Reapproved 2000).

G. ASTM E 1529 - Standard Test Methods for Determining Effects of Large Hydrocarbon Pool Fires on Structural Members and Assemblies; 2000.

H. ASTM E 1725 - Standard Test Methods for Fire Tests of Fire-Resistive Barrier Systems for Electrical System Components; 1995 (Reapproved 2001).

I. UL 1479 - Standard for Fire Tests of Through-Penetration Firestops; 1994.

J. UL 1709 - Rapid Rise Fire Tests of Protection Materials for Structural Steel; 1994.

K. UL 2079 - Tests for Fire Resistance of Building Joint Systems; 1998.

1.03 DEFINITIONS

A. Construction Gap: An open joint between adjacent rated assemblies; may be a moving joint or static opening, without penetrating items.

B. Firestop System: Specific firestop material or materials, which when installed in openings in a specific rated assembly, achieve the performance required.

C. Firestopping: Result of installation of firestop system.

D. Listing: The current, published listing of a system in a qualified listing agency's directory.

E. Listing Agency: Independent testing agency that has conducted tests and classified firestop systems for particular applications, which conducts routine in-plant follow-up inspections, and which lists tested systems in a published directory.

F. Penetrating Item: Any item (pipe, duct, conduit, cable, etc.) that passes completely through a rated assembly through an opening of any size.

G. Rated Assembly: A wall, floor, roof/ceiling, or other construction which is required to have an hourly fire rating or a smoke resistance rating.

H. Through Penetration: A hole through a rated assembly made to accommodate the passage of a penetrating item or an empty hole made for another purpose and not repairable using the original materials of construction.

1.04 SUBMITTALS

A. See Section 01300 - Administrative Requirements, for submittal procedures.

B. Shop Drawings: For each different firestopping configuration, provide the following:

1. Listing agency's detailed drawing showing opening, penetrating items, and firestopping materials, identified with listing agency's name and number or designation, fire rating achieved, and date of listing.

2. Identify which rated assembly each system is to be used in.

3. Any installation instructions that are not included on the detailed drawing.

4. For proposed systems that do not conform strictly to the listing, submit listing agency's drawing marked to show modifications and stamped approved by firestop system manufacturer's fire protection engineer.

5. Submit listing agency's test report showing compliance with requirements, based on testing of current products.

C. Product Certificates: Submit certificates signed by firestop system manufacturer certifying that materials furnished comply with requirements.

D. Product Data: Manufacturer's data sheets on each material to be used in firestop system systems, including:

1. Product characteristics and Material Safety Data Sheets.

2. Listing numbers of systems in which each product is to be used.

3. Preparation instructions and recommendations.

4. Storage and handling requirements and recommendations.

5. Installation methods.

E. Installer's Qualification Documentation.

1.05 QUALITY ASSURANCE

A. Installer Qualifications: Firm who is qualified by having experience, staff, and training to install the specified products, and who:

1. Is acceptable to or licensed by manufacturer.

1.06 DELIVERY, STORAGE, AND HANDLING

A. Deliver and store products until ready for installation in manufacturer's original unopened packaging, legibly marked with manufacturer's name and product identification, date of manufacture, lot number, shelf life, listing agency's classification marking, curing time, and mixing instructions if applicable.

B. Store and handle in such a manner as to prevent deterioration or damage due to moisture, temperature changes, contaminants, and other causes; follow manufacturer's instructions.

C. Store and dispose of solvent-based materials, and materials used with solvent-based materials, in accordance with requirements of local authorities having jurisdiction.

1.07 PROJECT CONDITIONS

A. Coordinate construction and cutting of openings so that each particular firestop system may be installed in accordance with its listing, including sizing, sleeves, and penetrating items.

B. Maintain environmental conditions (temperature, humidity, and ventilation) within limits recommended by manufacturer for optimum results. Do not install firestopping under environmental conditions outside manufacturer's absolute limits.

C. Provide ventilation as required by firestopping manufacturer, including mechanical ventilation if required.

PART 2 - PRODUCTS

2.01 MANUFACTURERS

A. Acceptable Manufacturer: One that meets performance criteria.

B. Single Source: All instances of a specific firestop system shall be made using products of the same manufacturer; where multiple installers (e.g. different subcontractors) are responsible for installation of firestopping, all installers shall use the same system made by the same manufacturer.

C. Substitutions: See Section 01600 - Product Requirements.

1. Where a proposed system is not listed by one of the listing agencies specified as acceptable, submit evidence prepared by a qualified independent testing agency that the system complies with the requirements.

2.02 MATERIALS

A. Firestopping - General: Provide installed firestopping that limits the spread of fire, heat, smoke, and gasses through otherwise unprotected openings.

1. Listing Agency: Provide systems that are listed by at least one of the following:

a. Underwriters Laboratories Inc. (UL), in "Fire Resistance Directory" category XHEZ or XHBN as appropriate.

b. ITS, in "Directory of Listed Products."

c. Omega Point Laboratories (OPL), in "Directory of Listed Products, Through Penetration Fire Resistance Directory."

d. Any other qualified independent testing and inspection agency that conducts periodic follow-up inspections and is acceptable to authorities having jurisdiction.

2. Furnish products identical to those tested for classification by listing agency.

3. Mark product packing with classification marking of listing agency.

4. Unlisted Systems: Where firestop systems not listed by any listing agency are required due to project conditions, submit a substitution proposal with evidence specified.

5. Firestopping Exposed To View: Provide products with flame spread index of less than 25 and smoke developed index of less than 450, when tested in accordance with ASTM E 84.

6. Firestopping Exposed to View, Traffic, Moisture, or Physical Damage: Provide products that after curing do not deteriorate when exposed to those conditions during and after construction.
7. Materials: Use only products specifically listed for use in listed systems.
8. Compatibility: Provide products that are compatible with each other, with the substrates forming openings, and with the items, if any, penetrating the firestopping, under the conditions represented by this project, based on testing and field performance demonstrated by manufacturer.

B. Through Penetration Firestop Systems (All Types Except Electrical Penetrations): Provide firestop systems listed for the specific combination of fire rated construction, type of penetrating item, annular space requirements, and fire rating, and:

1. F-Rating: Provide firestopping that has F-rating equal to or greater than the fire-resistance rating of the assembly in which the firestopping will be installed.
2. T-Rating: In habitable rooms and areas, where penetrating items are exposed to potential contact with materials on fire side(s) of rated assembly, provide firestopping that has a T-rating equal to its F-rating.
3. Wall Penetrations: Provide systems that are symmetrical, with the same rating from both sides of the wall.
4. Testing: Determine ratings in accordance with ASTM E 814 or UL 1479.
5. Provide asbestos-free products.

C. Through Penetration Firestop System For Electrical Penetrations: Provide firestopping complying with UL system No.5, R11044, tested in accordance with UL 1709, ASTM E 119, ASTM E 1529, and ASTM E 1725.

1. Acceptable Products:
   a. Fire Resistive Mats: 3M Interam(tm) Endothermic Mats, foil encapsulated, with manufacturer identification.
   b. Smoke and Flame Sealant: 3M FireDam(tm) 150+ Caulk, 3M Fire Barrier CP 25WB+ Caulk, or 3M Fire Barrier IC 15WB Caulk.
   c. Tape for Vapor Barrier, Heat Reflector, and Installation Aid: 3M Interam(tm) T-49 aluminum foil tape.
   d. Tape for Installation: Scotch 898 Filament Tape.
   e. Sheet to Cover Openings and as Collar: 3M Fire Barrier CS-195+ Composite Sheet.
   f. Cast In Place Devices: 3M Fire Barrier Cast In Place Devices.

D. Firestopping For Construction Gaps: Provide firestopping systems listed for the specific combination of fire-rated construction type, configuration, gap dimensions, and fire rating:

1. Provide firestopping that has fire resistance rating equal to or greater than the fireresistance rating of the assembly in which it is to be installed.
2. Provide firestopping that has movement capability appropriate to the potential movement of the gap, demonstrated by testing in accordance with ASTM E 1399 for minimum of 500 cycles at 10 cycles per minute.

3. Determine ratings in accordance with UL 2079.

E. Accessories: Provide all accessory materials required for complete installation; use materials specifically identified in system listings.

F. Identification Labels for Through Penetration Systems: Pressure sensitive self-adhesive vinyl labels, preprinted with the following information:

1. The words "Warning - Through Penetration Firestop System - Do not Disturb. Notify Building Management of Any Damage."
2. Listing agency's system number or designation.
3. System manufacturer's name, address, and phone number.
4. Installer's name, address, and phone number.
5. General contractor's name, address, and phone number (if applicable).
6. Date of installation.

PART 3 - EXECUTION

3.01 EXAMINATION

A. Do not begin installation until substrates have been properly prepared.

B. Conduct tests according to manufacturer's written recommendations to verify that substrates are free of oil, grease, rolling compounds, incompatible primers, loose mill scale, dirt and other foreign substances capable of impairing bond of firestopping.

C. Verify that items penetrating fire rated assemblies are securely attached, including sleeves, supports, hangers, and clips.

D. Verify that openings and adjacent areas are not obstructed by construction that would interfere with installation of firestopping, including ducts, piping, equipment, and other suspended construction.

E. Verify that environmental conditions are safe and suitable for installation of firestopping.

F. If substrate preparation is the responsibility of another installer, notify Architect of unsatisfactory preparation before proceeding.

3.02 PREPARATION

A. Prepare substrates in accordance with manufacturer's instructions and recommendations.

B. Install masking and temporary coverings as required to prevent contamination or defacement of adjacent surfaces due to firestopping installation.

3.03 INSTALLATION

A. Install in strict accordance with manufacturer's detailed installation instructions and procedures.

B. Install so that openings are completely filled and material is securely adhered.

C. Where firestopping surface will be exposed to view, finish to a smooth, uniform surface flush with adjacent surfaces.

D. After installation is complete, remove combustible forming materials and accessories that are not part of the listed system.

E. Repair or replace defective installations to comply with requirements.

F. At each through penetration, attach identification labels on both sides in location where label will be visible to anyone seeking to remove penetrating items or firestopping.

G. Clean firestop materials off surfaces adjacent to openings as work progresses, using methods and cleaning materials approved in writing by firestop system manufacturer and which will not damage the surfaces being cleaned.

H. Notify authority having jurisdiction when firestopping installation is ready for inspection; obtain advance approval of anticipated inspection dates and phasing, if any, required to allow subsequent construction to proceed.

I. Do not cover firestopping with other construction until approval of authority having jurisdiction has been received.

3.04 PROTECTION

A. Protect installed systems and products until completion of project; where subject to traffic, provide adequate protection board.

B. Touch up, repair or replace damaged systems and products before Substantial Completion.

END OF SECTION

SECTION 07900

JOINT SEALERS

PART 1 – GENERAL

1.01 SECTION INCLUDES

A. Sealants and joint backing.

B. Precompressed foam sealers.

1.02 RELATED SECTIONS

1.03 REFERENCES

A. ASTM C 834 - Standard Specification for Latex Sealants; 2000.

B. ASTM C 919 - Standard Practice for Use of Sealants in Acoustical Applications; 2002.

C. ASTM C 920 - Standard Specification for Elastomeric Joint Sealants; 2002.

D. ASTM C 1193 - Standard Guide for Use of Joint Sealants; 2000.

E. ASTM D 1667 - Standard Specification for Flexible Cellular Materials--Vinyl Chloride Polymers and Copolymers (Closed-Cell Foam); 1997.

1.04 SUBMITTALS

A. See Section 01300 - Administrative Requirements, for submittal procedures.

B. Product Data: Provide data indicating sealant chemical characteristics, performance criteria, substrate preparation, limitations, and color availability.

1.05 QUALITY ASSURANCE

A. Maintain one copy of each referenced document covering installation requirements on site.

B. Applicator Qualifications: Company specializing in performing the work of this section approved by manufacturer.

1.06 ENVIRONMENTAL REQUIREMENTS

A. Maintain temperature and humidity recommended by the sealant manufacturer during and after installation.

1.07 COORDINATION

A. Coordinate the work with all sections referencing this section.

1.08 WARRANTY

A. Correct defective work within a five year period after Date of Substantial Completion.

B. Warranty: Include coverage for installed sealants and accessories which fail to achieve airtight seal, exhibit loss of adhesion or cohesion, or do not cure.

PART 2 – PRODUCTS

2.01 MANUFACTURERS

A. Polyurethane Sealants:

1. Pecora Corporation: www.pecora.com.

2. Degussa Building Systems/Sonneborn: www.chemrex.com.
3. Substitutions: See Section 01600 - Product Requirements.

B. Preformed Compressible Foam Sealers:

4. Substitutions: See Section 01600 - Product Requirements.

2.02 SEALANTS

A. General Purpose Exterior Sealant: Polyurethane; ASTM C 920, Grade NS, Class 25, Uses M, G, and A; single component.

1. Color: Standard colors matching finished surfaces.
2. Applications: Use for:

a) Control, expansion, and soft joints in masonry.
b) Joints between concrete and other materials.
c) Joints between metal frames and other materials.
d) Other exterior joints for which no other sealant is indicated.

B. General Purpose Interior Sealant: Acrylic emulsion latex; ASTM C 834, Type OP, Grade NF single component, paintable.

1. Color: Standard colors matching finished surfaces.
2. Applications: Use for:

a) Interior wall and ceiling control joints.
b) Joints between door and window frames and wall surfaces.
c) Other interior joints for which no other type of sealant is indicated.

C. Bathtub/Tile Sealant: White silicone; ASTM C 920, Uses I, M and A; single component, mildew resistant.

1. Applications: Use for:

a) Joints between plumbing fixtures and floor and wall surfaces.
b) Joints between kitchen and bath countertops and wall surfaces.

D. Acoustical Sealant: Butyl or acrylic sealant; ASTM C 920, Grade NS, Class 12-1/2, Uses M and A; single component, solvent release curing, non-skinning.

1. Applications: Use for concealed locations only:

a) Sealant bead between top stud runner and structure and between bottom stud track and floor.
b) At all partitions scheduled to receive sound attenuation insulation.

E. Concrete Paving Joint Sealant: Polyurethane, self-leveling; ASTM C 920, Class 25, Uses T, I, M and A; single component.

1. Color: Color as selected.
2. Applications: Use for:

a) Joints in sidewalks adjacent to building.

2.03 ACCESSORIES

A. Primer: Non-staining type, recommended by sealant manufacturer to suit application.

B. Joint Cleaner: Non-corrosive and non-staining type, recommended by sealant manufacturer; compatible with joint forming materials.

C. Joint Backing: Round foam rod compatible with sealant; ASTM D 1667, closed cell PVC; oversized 30 to 50 percent larger than joint width.

D. Bond Breaker: Pressure sensitive tape recommended by sealant manufacturer to suit application.

PART 3 – EXECUTION

3.01 EXAMINATION

A. Verify that substrate surfaces are ready to receive work.

B. Verify that joint backing and release tapes are compatible with sealant.

3.02 PREPARATION

A. Remove loose materials and foreign matter which might impair adhesion of sealant.

B. Clean and prime joints in accordance with manufacturer's instructions.

C. Perform preparation in accordance with manufacturer's instructions and ASTM C 1193.

D. Protect elements surrounding the work of this section from damage or disfigurement.

3.03 INSTALLATION

A. Perform work in accordance with sealant manufacturer's requirements for preparation of surfaces and material installation instructions.

B. Perform installation in accordance with ASTM C 1193.

C. Perform acoustical sealant application work in accordance with ASTM C 919.

D. Measure joint dimensions and size joint backers to achieve width-to-depth ratio, neck dimension, and surface bond area as recommended by manufacturer, except where specific dimensions are indicated.

E. Install bond breaker where joint backing is not used.

F. Install sealant free of air pockets, foreign embedded matter, ridges, and sags.

G. Apply sealant within recommended application temperature ranges. Consult manufacturer when sealant cannot be applied within these temperature ranges.

H. Tool joints concave.

3.04 CLEANING

A. Clean adjacent soiled surfaces.

3.05 PROTECTION OF FINISHED WORK

A. Protect sealants until cured.

END OF SECTION

SECTION 08140

Wood Doors

PART 1 - GENERAL

1.01 SECTION INCLUDES

A. Flush laminate clad wood doors; flush configuration; rated and non-rated wood doors.

1.02 RELATED SECTIONS

A. Section 08710 - Door Hardware.

B. Section 08800 - Glazing.

1.03 REFERENCES

A. AWI/AWMAC (QSI) - Architectural Woodwork Quality Standards Illustrated; Architectural Woodwork Institute and Architectural Woodwork Manufacturers Association of Canada; 2006, 8th Ed., Version 2.0.

B. ICC (IBC) - International Building Code; 2009.

C. ITS (DIR) - Directory of Listed Products; Intertek Testing Services NA, Inc.; current edition.

D. NEMA LD 3 - High-Pressure Decorative Laminates; National Electrical Manufacturers Association; current edition

E. NFPA 80 - Standard for Fire Doors and Fire Windows; National Fire Protection Association; current edition.

F. UBC Std 7-2, Part II - Test Standard for Smoke- and Draft-control Assemblies; International Conference of Building Officials; current edition.

G. UL (BMD) - Building Materials Directory; Underwriters Laboratories Inc.; current edition.

1.04 SUBMITTALS

A. See Section 01300 - Administrative Requirements for submittal procedures.

B. Product Data: Indicate door core materials and construction; laminate, type and characteristics.

C. Shop Drawings: Illustrate door opening criteria, elevations, sizes, types, swings, undercuts required, special beveling, special blocking for hardware, factory machining criteria, factory finishing criteria, identify cutouts for glazing.

D. Manufacturer's Installation Instructions: Indicate special installation instructions.

1.05 QUALITY ASSURANCE

A. Manufacturer: Company specializing in manufacturing the products specified in this section with minimum three years of documented experience.

B. Installed Fire Rated Door and Transom Panel Assembly: Conform to NFPA 80 for fire rated class as indicated.

C. Smoke and Draft Control Doors: In addition to required fire rating, comply with air leakage requirements of UBC Std 7-2, Part II; with "S" label; if necessary, provide additional gasketing or edge sealing.

1.06 DELIVERY, STORAGE, AND PROTECTION

A. Package, deliver and store doors in accordance with specified quality standard.

B. Accept doors on site in manufacturer's packaging. Inspect for damage.

C. Protect doors with resilient packaging sealed with heat shrunk plastic. Do not store in damp or wet areas; or in areas where sunlight might bleach veneer. Seal top and bottom edges with tinted sealer if stored more than one week. Break seal on site to permit ventilation.

1.07 PROJECT CONDITIONS

A. Coordinate the work with door opening construction, door frame and door hardware installation.

1.08 WARRANTY

A. See Section 01780 - Closeout Submittals for additional warranty requirements.

B. Provide warranty for the following term:

1. Interior Doors: Life of installation.

A. Include coverage for delamination of veneer, warping beyond specified installation tolerances, defective materials, and telegraphing core construction.

PART 2 - PRODUCTS

2.01 MANUFACTURERS

A. High Pressure Decorative Laminate Faced Doors:

1. Ampco Products, Inc: www.ampco.com.

2. Poncraft Door Co: www.poncraft.com.

3. VT Industries, Inc: www.vtindustries.com.

4. Substitutions: See Section 01600 - Product Requirements.

2.02 DOORS AND PANELS

A. Interior Doors: 1-3/4 inches thick unless otherwise indicated; flush construction.

1. Provide solid core doors at all locations.

2. Fire Rated Doors: Tested to ratings indicated on drawings in accordance with International Building Code ("positive pressure"); UL or WH (ITS) labeled without any visible seals when door is open.

3. Smoke and Draft Control Doors: Tested to ratings indicated on drawings in accordanceprovide gasketing as specified by listing.

4. 5 ply High pressure decorative laminate finish.

2.03 DOOR AND PANEL CORES

A. Non-Rated Solid Core and 20 Minute Rated Doors: Type particleboard core (PC), plies and faces as indicated above.

2.04 DOOR FACINGS

A. High Pressure Decorative Laminate Facing for Fire Doors: NEMA LD 3, HGF; color as selected; textured, low gloss finish.

B. High Pressure Decorative Laminate Facing for Non-Fire-Rated Doors: NEMA LD 3, HGS; color as selected; textured, low gloss finish.

C. Facing Adhesive: Type I - waterproof.

2.05 ACCESSORIES

A. Glazing Stops: Aluminum channel shape, butted corners; prepared for countersink style tamper proof screws.

2.06 DOOR CONSTRUCTION

A. Fabricate doors in accordance with door quality standard specified.

B. Cores Constructed with Stiles and Rails:

C. Provide solid blocks at lock edge for hardware reinforcement.

1. Provide solid blocking for other throughbolted hardware.

D. Fit door edge trim to edge of stiles after applying veneer facing.

E. Vertical Exposed Edge of Stiles - Plastic Laminate Faces: One piece hardwood, for stain or paint finish (as required to match selected plastic laminate faces).

F. Fit door edge trim to edge of stiles after applying veneer facing.

G. Factory machine doors for hardware other than surface-mounted hardware, in accordance with hardware requirements and dimensions.

H. Factory fit doors for frame opening dimensions identified on shop drawings, with edge clearances in accordance with specified quality standard.

I. Provide edge clearances in accordance with AWI Quality Standards Illustrated Section 1700.

J. Provide edge clearances in accordance with AWI Quality Standards Illustrated Section 1700.

PART 3 - EXECUTION

3.01 EXAMINATION

A. Verify existing conditions before starting work.

B. Verify that opening sizes and tolerances are acceptable.

C. Do not install doors in frame openings that are not plumb or are out-of-tolerance for size or alignment.

3.02 INSTALLATION

A. Install doors in accordance with manufacturer's instructions and specified quality standard.

1. Install fire-rated doors in accordance with NFPA 80 requirements.

B. Factory-Finished Doors: Do not field cut or trim; if fit or clearance is not correct, replace door.

C. Trim door height by cutting bottom edges to a maximum of 3/4 inch (19 mm).

1. Trim fire door height at bottom edge only, in accordance with fire rating requirements.

D. Use machine tools to cut or drill for hardware.

E. Coordinate installation of doors with installation of frames and hardware.

F. Coordinate installation of glazing.

3.03 INSTALLATION TOLERANCES

A. Conform to specified quality standard for fit and clearance tolerances.

B. Conform to specified quality standard for maximum diagonal distortion.

C. Maximum Diagonal Distortion (Warp): 1/8 inch measured with straight edge or taut string, corner to corner, over an imaginary 36 by 84 inches surface area.

D. Maximum Vertical Distortion (Bow): 1/8 inch measured with straight edge or taut string, top to bottom, over an imaginary 36 by 84 inches surface area.

E. Maximum Width Distortion (Cup): 1/8 inch measured with straight edge or taut string, edge to edge, over an imaginary 36 by 84 inches surface area.

3.04 ADJUSTING

A. Adjust doors for smooth and balanced door movement.

B. Adjust closers for full closure.

3.05 SCHEDULE - See Drawings

END OF SECTION

SECTION 08510

EXTERIOR ALUMINUM WINDOWS

PART 1 – GENERAL

All exterior aluminum windows shall be pre-approved by TDI, be impact resistant windows as per TDI requirements, and shall be good for the wind pressures shown on the structural drawings.

1.01 SECTION INCLUDES

A. Fixed windows and operable exterior window frame assemblies meeting or exceeding windstorm impact requirement.

1.02 RELATED SECTIONS

A. Section 07900 - Joint Sealers: Perimeter sealant and back-up materials.

B. Section 08800 - Glazing.

1.03 REFERENCES

A. AAMA/NWWDA 101/I.S.2 - Voluntary Specifications for Aluminum, Vinyl (PVC) and WoodWindows and Glass Doors; 1997.

B. AAMA 2603 - Voluntary Specification, Performance Requirements and Test Procedures forPigmented Organic Coatings on Aluminum Extrusions and Panels; 2002.

C. FBC TAS 201 - Impact Test Procedures; Florida Building Code; 1994.

D. FBC TAS 202 - Criteria for Testing Impact and Non Impact Resistant Building EnvelopeComponents Using Uniform Static Air Pressure; Florida Building Code; 1994.

E. FBC TAS 203 - Criteria for Testing Products Subject To Cyclic Wind Pressure Loading; Florida Building Code; 1994.

1.04 SUBMITTALS

A. See Section 01300 - Administrative Requirements, for submittal procedures.

B. Product Data: Manufacturer's data sheets on each product to be used, including:

1. Preparation instructions and recommendations.
2. Storage and handling requirements and recommendations.
3. Installation methods.

C. Certification: Evidence of certification to specified ratings. AA 900 ISOWEB® window thermally broken 2 5/8” deep frame outswing (C-HC90 – AW90)

D. Provide Engineered shop drawing Windstorm approved for Texas.

1.05 DELIVERY, STORAGE, AND HANDLING

A. Do not deliver units to project site until ready to install, unless indoor storage area is available.

B. Store products in manufacturer's unopened packaging until ready for installation.

1.06 WARRANTY

A. Provide manufacturer's standard one year warranty.

PART 2 - PRODUCTS

2.01 MANUFACTURERS

A. Acceptable Manufacturers:

1. Kawneer Company, Inc; Series #8589 - fixed www.kawneer.com
2. Efco; Tel: (800) 221-4169. www.efcocorp.com.
3. All Seasons Commercial, Inc.; 1293 Harvey Mitchell Pkwy., Bryan, TX 77803; Tel: (800) 444-1444. Fax: (979) 823-1005.
4. 4. YKK AP America, Inc.; 7680 The Bluffs, Suite 100, Austell, GA 30168. Tel: (678) 838-6000. Fax: (678) 838-6001.

B. Substitutions: See Section 01600 - Product Requirements.

2.02 MATERIALS

A. Windows: Complying with AAMA/NWWDA 101/I.S.2; factory assembled and glazed,complete with operating hardware. Kawneer Company, Inc: www.kawneer.com "Series 500"or equal as approved

1. Frame Components: Aluminum alloy 6303-T5; 2½"x5" Windstorm
2. Corners: Aluminum corner keys; fastened by sheet metal screws and sealed with small joint sealant colored to match frame, unless otherwise indicated.
3. Anchors: Concealed screw or bolts as required to achieve anchorage strength equivalent to impact resistance.
4. Panning: Aluminum extrusions or sheet, to match framing members.
5. Fasteners: At least equivalent to tested configuration.
6. Rough Bucks: Pressure preservative treated; sizes as required.
7. Sealant: Clear silicone sealant.
8. Finish: Clear anodized aluminum.

2.03 SMALL AND LARGE MISSILE-RATED WINDOWS (ref. Section 08800 Glazing)

A. Fixed Windows: All Seasons Series 2000; rated for small and large missile impact; overall window size up to 37 inches by 76 inches.

1. AAMA Grade: H-C95.
2. Design Wind Load: plus/minus 99 psf.
3. Impact Resistance: Tested to meet FBC TAS 201 Small and Large Missile Impact, and approved by Miami Dade Building Code Compliance Department.
4. Performance Criteria: Tested to meet FBC TAS 202 and FBC TAS 203, and approved by Miami Dade Building Code Compliance Department.
5. Size: As indicated on drawings.
6. Glazing Material: 9/16 inch laminated glass; two lites of 0.222 inch tempered glass with 0.10 inch interlayer film (storm guard HP), Dade County approved.
7. Glazing Method: Interior glazed with snap-on extruded aluminum glazing stops; glazing penetrating at least 0.421 inch into rabbet using clear colored silicone; clear colored silicone between bead and glass.

8. Exterior Glass 1/4” Tempered with 1/2" Air Space plus 9/16” Impact Glass for a TotalWindow Glazing depth of 1-5/16”.

2.04 Top hinged out swing awnings windows (thermal laced) clear anodized aluminum Architectural Class II kawneer series 8225 TLFX.

2.05 Side hinged out swing casement windows (thermal laced clear anodized).

2.06 Hardware – Heavy duty corrosive resistant to salt air – type 316 stainless steel or silver powder coat.

PART 3 - EXECUTION

3.01 EXAMINATION

A. Do not begin installation until substrates have been properly prepared.

B. If substrate preparation is the responsibility of another installer, notify Architect of unsatisfactory preparation before proceeding.

3.02 PREPARATION

A. Clean surfaces thoroughly prior to installation.

B. Prepare surfaces using the methods recommended by the manufacturer for achieving the best result for the substrate under the project conditions.

3.03 INSTALLATION

A. Install in accordance with manufacturer's instructions.

B. After installation adjust units for proper operation, without binding, sticking, or racking.

C. Seal perimeter of window frame to adjacent construction, on both inside and outside, usingspecified sealant and tool to concave joint.

3.04 PROTECTION

D. Protect installed products until completion of project.

E. Touch-up, repair or replace damaged products before Substantial Completion.

END OF SECTION

SECTION 08710

DOOR HARDWARE

PART 1 - GENERAL

1.01 SUMMARY:

A. Section Includes: Finish Hardware for door openings, except as otherwise specified herein.

1. Door hardware for steel (hollow metal) doors.
2. Door hardware for aluminum doors.
3. Door hardware for wood doors.
4. Door hardware for other doors indicated.
5. Keyed cylinders as indicated.

B. Intent of Hardware Groups

1. Should items of hardware not definitely specified be required for completion of the Work, furnish such items of type and quality comparable to adjacent hardware and appropriate for service required.
2. Where items of hardware aren’t definitely or correctly specified, are required for completion of the Work, a written statement of such omission, error, or other discrepancy to Architect, prior to date specified for receipt of bids for clarification by addendum; or, furnish such items in the type and quality established by this specification, and appropriate to the service intended.

C. Allowances

1. Refer to Division 1 for allowance amount and procedures.

D. Alternates

1. Refer to Division 1 for Alternates and procedures.

1.02 SUBSTITUTIONS:

A. Comply with Division 1

1.03 SUBMITTALS:

A. Comply with Division 1

B. Special Submittal Requirements: Combine submittals of this Section with Sections listed below to ensure the "design intent" of the system/assembly is understood and can be reviewed together.

C. Product Data: Manufacturer's specifications and technical data including the following:

1. Detailed specification of construction and fabrication.
2. Manufacturer's installation instructions.
3. Wiring diagrams for each electric product specified. Coordinate voltage with electrical before submitting.
4. Submit 6 copies of catalog cuts with hardware schedule.

D. Shop Drawings - Hardware Schedule: Submit 6 complete reproducible copy of detailed hardware schedule in a vertical format.
   1. List groups and suffixes in proper sequence.
   2. Completely describe door and list architectural door number.
   3. Manufacturer, product name, and catalog number.
   4. Function, type, and style.
   5. Size and finish of each item.
   6. Mounting heights.
   7. Explanation of abbreviations and symbols used within schedule.

E. Templates: Submit templates and "reviewed Hardware Schedule" to door and frame supplier and others as applicable to enable proper and accurate sizing and locations of cutouts and reinforcing.

F. Samples: (If requested by the Architect)
   1. 1 sample of Lever and Rose/Escutcheon design, (pair).
   2. 3 samples of metal finishes

G. Contract Closeout Submittals: Comply with Division 1 including specific requirements indicated.
   1. Operating and maintenance manuals: Submit 3 sets containing the following.
      a) Complete information in care, maintenance, and adjustment, and data on repair and replacement parts, and information on preservation of finishes.
      b) Catalog pages for each product.
      c) Name, address, and phone number of local representative for each manufacturer.
      d) Parts list for each product.
   2. Copy of final hardware schedule, edited to reflect, "As installed".
   3. Copy of final keying schedule
   4. One set of special tools required for maintenance and adjustment of hardware, including changing of cylinders.

1.04 QUALITY ASSURANCE

A. Comply with Division 1.
   1. Statement of qualification for distributor and installers.
   2. Statement of compliance with regulatory requirements and single source responsibility.
   3. Distributor's Qualifications: Firm with 3 years experience in the distribution of commercial hardware.
      a) Distributor to employ full time Architectural Hardware Consultants (AHC) for the purpose of scheduling and coordinating hardware and establishing keying schedule.
      b) Hardware Schedule shall be prepared and signed by an AHC.

4. Installer's Qualifications: Firm with 3 years experienced in installation of similar hardware to that required for this Project, including specific requirements indicated.
5. Regulatory Label Requirements: Provide testing agency label or stamp on hardware for labeled openings.
   c) Provide UL listed hardware for labeled and 20 minute openings in conformance with requirements for class of opening scheduled.
   d) Underwriters Laboratories requirements have precedence over this specification where conflict exists.
6. Single Source Responsibility: Except where specified in hardware schedule, furnish products of only one manufacturer for each type of hardware.

B. Review Project for extent of finish hardware required to complete the Work. Where there is a conflict between these Specifications and the existing hardware, notify the Architect in writing and furnish hardware in compliance with the Specification unless otherwise directed in writing by the Architect.

1.05 DELIVERY, STORAGE, AND HANDLING

A. Packing and Shipping: Comply with Division 1.
   1. Deliver products in original unopened packaging with legible manufacturer's identification.
   2. Package hardware to prevent damage during transit and storage.
   3. Mark hardware to correspond with "reviewed hardware schedule".
   4. Deliver hardware to door and frame manufacturer upon request.

B. Storage and Protection: Comply with manufacturer's recommendations.

1.06 PROJECT CONDITIONS:

A. Coordinate hardware with other work. Furnish hardware items of proper design for use on doors and frames of the thickness, profile, swing, security and similar requirements indicated, as necessary for the proper installation and function, regardless of omissions or conflicts in the information on the Contract Documents.

B. Review Shop Drawings for doors and entrances to confirm that adequate provisions will be made for the proper installation of hardware.

1.07 WARRANTY:

A. Refer to Conditions of the Contract

B. Manufacturer’s Warranty:
   1. Closers: Ten years
   2. Exit Devices: Three Years
   3. Locksets & Cylinders: Three years
   4. All other Hardware: Two years.

1.08 OWNER’S INSTRUCTION:

A. Instruct Owner’s personnel in operation and maintenance of hardware units.

1.09 MAINTENANCE:

A. Extra Service Materials: Deliver to Owner extra materials from same production run as products installed. Package products with protective covering and identify with descriptive labels. Comply with Division 1 Closeout Submittals Section.

1. Special Tools: Provide special wrenches and tools applicable to each different or special hardware component.
2. Maintenance Tools: Provide maintenance tools and accessories supplied by hardware component manufacturer.
3. Delivery, Storage and Protection: Comply with Owner's requirements for delivery, storage and protection of extra service materials.

B. Maintenance Service: Submit for Owner's consideration maintenance service agreement for electronic products installed.

PART 2 - PRODUCTS

2.1 MANUFACTURERS:

A. The following manufacturers are approved subject to compliance with requirements of the Contract Documents. Approval of manufacturers other than those listed shall be in accordance with Division 1.

<u>Item: Manufacturer: Approved:</u>

Hinges: Stanley: McKinney, Bommer

Continuous Hinges: Stanley: Pemko, Select

Locksets & Cylinders: Best PATD: Owner Standard

Exit Devices: Precision: Owner Standard

Pulls: Rockwood: Trimco

Protection Plates: Rockwood: Trimco

Closers: Stanley: Owner Standard

Stops: Rockwood: Trimco

Overhead Stops: ABH: Rockwood

Gasketing: National Guard: Pemko, Reese

2.2 MATERIALS:

A. Hinges:

1. Template screw hole locations
2. Minimum of 2 permanently lubricated non-detachable bearings
3. Equip with easily seated, non-rising pins
4. Sufficient size to allow 180-degree swing of door
5. Furnish hinges with five knuckles and concealed bearings
6. Provide hinge type as listed in schedule.
7. Furnish 3 hinges per leaf to 7 foot 6 inch height. Add one for each additional 30 inches in height or fraction thereof.

8. Tested and approved by BHMA for all applicable ANSI Standards for type, size, function and finish
9. UL10B listed for Fire

B. Geared Continuous Hinges:

1. Tested and approved by BHMA for ANSI A156.26-1996 Grade 1
2. Anti-spinning through fastener
3. UL10B listed for 3 hour Fire rating
4. Non-handed
5. Lifetime warranty
6. Provide Fire Pins for 3-hour fire ratings
7. Sufficient size to permit door to swing 180 degrees

C. Mortise Type Locks and Latches:

1. Tested and approved by BHMA for ANSI A156.13, Series 1000, Operational Grade 1, Extra-Heavy Duty, Security Grade 2 and be UL10C
2. Fit ANSI A115.1 door preparation
3. Functions and design as indicated in the hardware groups
4. Solid, one-piece, 3/4-inch (19mm) throw, anti-friction latchbolt made of self-lubricating stainless steel
5. Deadbolt functions shall have 1 inch (25mm) throw bolt made of hardened stainless steel
6. Latchbolt and Deadbolt are to extend into the case a minimum of 3/8 inch (9.5mm) when fully extended
7. Auxiliary deadlatch to be made of one piece stainless steel, permanently lubricated
8. Provide sufficient curved strike lip to protect door trim
9. Lever handles must be of forged or cast brass, bronze or stainless steel construction and conform to ANSI A117.1. Levers that contain a hollow cavity are not acceptable
10. Lock shall have self-aligning, thru-bolted trim
11. Levers to operate a roller bearing spindle hub mechanism
12. Mortise cylinders of lock shall have a concealed internal setscrew for securing the cylinder to the lockset. The internal setscrew will be accessible only by removing the core, with the control key, from the cylinder body.
13. Spindle to be designed to prevent forced entry from attacking of lever
14. Provide locksets with 7-pin removable and interchangeable core cylinders
15. Each lever to have independent spring mechanism controlling it
16. Core face must be the same finish as the lockset

D. Exit Devices shall:

1. Tested and approved by BHMA for ANSI 156.3, Grade 1

2. Provide a deadlocking latchbolt
3. Non-fire rated exit devices shall have cylinder dogging.
4. Touchpad shall be “T” style
5. Exposed components shall be of architectural metals and finishes.
6. Lever design shall match lockset lever design
7. Provide strikes as required by application.
8. Fire exit devices to be listed for UL10C
9. UL listed for Accident Hazard
10. Provide vandal resistant or breakaway trim
11. Aluminum vertical rod assemblies are acceptable only when provide with the manufacturers optional top and bottom stainless steel rod guard protectors

E. Cylinders:

1. Provide the necessary cylinder housings, collars, rings & springs as recommended by the manufacturer for proper installation.
2. Provide the proper cylinder cams or tail piece as required to operate all locksets and other keyed hardware items listed in the hardware sets.
3. Coordinate and provide as required for related sections.

F. Door Closers shall:

1. Tested and approved by BHMA for ANSI 156.4, Grade 1
2. UL10C certified
3. Closer shall have extra-duty arms and knuckles
4. Conform to ANSI 117.1
5. Maximum 2 7/16 inch case projection with non-ferrous cover
6. Separate adjusting valves for closing and latching speed, and backcheck
7. Provide adapter plates, shim spacers and blade stop spacers as required by frame and door conditions
8. Full rack and pinion type closer with 1½“ minimum bore
9. Mount closers on non-public side of door, unless otherwise noted in specification
10. Closers shall be non-handed, non-sized and multi-sized 1 through 6

G. Kickplates: Provide with four beveled edges, 10 inches high by width less 2 inches on single doors and 1 inch on pairs of doors. Furnish oval-head countersunk screws to match finish.

H. Seals: All seals shall be finished to match adjacent frame color. Seals shall be furnished as listed in schedule. Material shall be UL listed for labeled openings.

I. Key Control: Provide one Telkee RWC-75-S wall mounted key cabinet complete with hooks, index and tags.

J. Silencers: Furnish silencers on all interior frames, 3 for single doors, 2 for pairs. Omit where any type of seals occur.

K. Overhead Stops: Furnish overhead stops where indicated. Coordinate with door and other door hardware.

2.3 FINISH:

A. Designations used in Schedule of Finish Hardware - 3.5, and elsewhere to indicate hardware finishes are those listed in ANSI/BHMA A156.18 including coordination with traditional U.S. finishes shown by certain manufacturers for their products

B. Powder coat door closers to match other hardware, unless otherwise noted.

C. Aluminum items shall be finished to match predominant adjacent material. Seals to coordinate with frame color.

2.4 KEYS AND KEYING:

A. Provide keyed brass construction cores and keys during the construction period. Construction control and operating keys and core shall not be part of the Owner's permanent keying system or furnished in the same keyway (or key section) as the Owner's permanent keying system. Permanent cores and keys (prepared according to the accepted keying schedule) will be furnished to the Owner.

B. Cylinders, removable and interchangeable core system: Best PATD MX8 7-pin

C. Permanent keys and cores: Stamped with the applicable key mark for identification. These visual key control marks or codes will not include the actual key cuts. Permanent keys will also be stamped "Do Not Duplicate."

D. Transmit Grand Masterkeys, Masterkeys and other Security keys to Owner by Registered Mail, return receipt requested.

E. Furnish keys in the following quantities:

1. 1 each Grand Masterkeys
2. 4 each Masterkeys
3. 2 each Change keys each keyed core
4. 15 each Construction masterkeys
5. 1 each Control keys

F. The Owner, or the Owner's agent, will install permanent cores and return the construction cores to the Hardware Supplier. Construction cores and keys remain the property of the Hardware Supplier.

G. Keying Schedule: Arrange for a keying meeting with Architect Owner and hardware supplier, and other involved parties to ensure locksets and locking hardware, are functionally correct and keying complies with project requirements. Furnish 3 typed copies of keying schedule to Architect.

PART 3 - EXECUTION

3.1 EXAMINATION

A. Verification of conditions: Examine doors, frames, related items and conditions under which Work is to be performed and identify conditions detrimental to proper and or timely completion.

1. Do not proceed until unsatisfactory conditions have been corrected.

3.2 HARDWARE LOCATIONS:

A. Mount hardware units at heights indicated in the following publications except as specifically indicated or required to comply with the governing regulations.

1. Recommended Locations for Builder's Hardware for Standard Steel Doors and Frames, by the Door and Hardware Institute (DHI).

2. NWWDA Industry Standard I.S.1.7, Hardware Locations for Wood Flush Doors.

3.3 INSTALLATION:

A. Install each hardware item per manufacturer's instructions and recommendations. Do not install surface mounted items until finishes have been completed on the substrate. Set units level, plumb and true to line and location. Adjust and reinforce the attachment substrate as necessary for proper installation and operation.

B. Conform to local governing agency security ordinance.

C. ADA Standard: Conform to ANSI A117.1 for positioning requirements for disabled.

D. Installed hardware using the manufacturers fasteners provided. Drill and tap all screw holes located in metallic materials. Do not use "Riv-Nuts" or similar products.

3.4 FIELD QUALITY CONTROL AND FINAL ADJUSTMENT

A. Contractor/Installers, Field Services: After installation is complete, contractor shall inspect completed door openings on site to verify installation of hardware is complete and properly adjusted, in accordance with both the Contract Documents and final shop drawings.

1. Check and adjust closers to ensure proper operation.

a) Adjust closer to complete full closing cycle in less than 4 to 6 seconds without abrupt change of speed between "Sweep" and "Latch" speeds.

b) Adjust "Backcheck" according to manufacturer's instructions.

c) Set exterior doors closers to have 8.5 lbs maximum pressure to open, interior nonrated at 5 lbs, rated openings at 12 lbs

2. Check latchset, lockset, and exit devices are properly installed and adjusted to ensure proper operation.

a) Verify levers are free from binding.

b) Ensure latchbolts and dead bolts are engaged into strike and hardware is functioning.

3. Report findings, in writing, to architect and hardware supplier outlining corrective actions and recommendations.

3.5 SCHEDULE OF FINISH HARDWARE:

Manufacturer List

Code Name

AB ABH Manufacturing Inc.

BE Best Access Systems

BY By Others

NA National Guard

PR Precision

RO Rockwood

SD Security Door Controls

ST Stanley

Finish List

Code Description

AL Aluminum

32D Satin Stainless Steel

626 Satin Chromium Plated

630 Satin Stainless Steel

689 Aluminum Painted

GREY Grey

SP28 Lacquer Sprayed Aluminum

BLACK Black

US26D Chromium Plated, Dull

US32D Stainless Steel, Dull

Option List

Code Description

CD CYLINDER DOGGING

HC Hurricane Code Device

M5 GALVANIZED STEEL CHAIN

SN Sex Nuts (Pkg. of 4)

WC PADLOCK WEATHER COVERS

4BE BEVELLED 4 SIDES

CSK COUNTERSUNK HOLES (12" & UNDER)

EPT Prep EPT Prep (full mortise)

Hardware Sets

SET #1 - Entrance

1 Continuous Hinge 662HD EPT Prep AL ST

1 Exit Device HC 2103 X 1703B CD 630 PR

1 Rim Cylinder 1E-72 PATD 626 BE

1 Mortise Cylinder 1E-74 PATD 626 BE

1 Door Closer D-4550 CS 689 ST

1 Overhead Door Stop C01541 US32D AB

1 Drop Plate P45-180 AL ST

1 Threshold 171A PE

1 Raindrip 16A 4"ODW PE

SET #2 - Exterior

1 Continuous Hinge 662HD EPT Prep AL ST

1 Exit Device HC 2103 X 1703B CD 630 PR

1 Rim Cylinder 1E-72 PATD 626 BE

1 Mortise Cylinder 1E-74 PATD 626 BE

1 Door Closer D-4550 CS 689 ST

1 Overhead Door Stop C02541 US32D AB

1 Drop Plate P45-180 AL ST

1 Threshold 171A PE

1 Raindrip 16A 4"ODW PE

SET #3 - Gates

1 Mortise Cylinder 1E-74 PATD 626 BE

SET #10 - Manager's Office

3 Hinges CB1960R 4 1/2 x 4 1/2 32D ST

1 Lockset 45H-7R14N PATD 630 BE

1 Wall Bumper 401 US26D RO

1 Soundproofing 127 NA x Head & Jambs NA

1 Auto Door Bottom 225 N NA

SET #11 - Offices

3 Hinges CB1960R 4 1/2 x 4 1/2 32D ST

1 Lockset 45H-7A14N PATD 630 BE

1 Wall Bumper 401 US26D RO

3 Door Silencers 608 GREY RO

SET #12 - Restrooms

3 Hinges CB1960R 4 1/2 x 4 1/2 32D ST

1 Push Plate 70E 6 X 16 US32D RO

1 Door Pull 111 X 70C US32D RO

1 Door Closer D-4551 STD W/PA BRKT SN 689 ST

1 Overhead Door Stop C01541 US32D AB

1 Protection Plate K1050 10" x 2"LDW 4BE CSK US32D RO

1 Protection Plate K1050 10" x 2" LDW 4BE CSK US32D RO

3 Door Silencers 608 GREY RO

SET #13 - Restroom to Bay and Ice

3 Hinges CB1960R 4 1/2 x 4 1/2 32D ST

1 Lockset 45H-7AB14N PATD 630 BE

1 Door Closer D-4551 STD W/PA BRKT SN 689 ST

1 Overhead Door Stop C01541 US32D AB

1 Protection Plate K1050 10" x 2"LDW 4BE CSK US32D RO

1 Protection Plate K1050 10" x 2"LDW 4BE CSK US32D RO

1 Smoke Seal 5050B x Head & Jambs NA

SET #14 - Janitor

3 Hinges CB1960R 4 1/2 x 4 1/2 32D ST

1 Lockset 45H-7AB14N PATD 630 BE

1 Door Closer D-4551 STD W/PA BRKT SN 689 ST

1 Overhead Door Stop C01541 US32D AB

1 Protection Plate K1050 10" x 2"LDW 4BE CSK US32D RO

1 Protection Plate K1050 10" x 2" LDW 4BE CSK US32D RO

3 Door Silencers 608 GREY RO

SET #15 - Meeting

3 Hinges CB1960R 4 1/2 x 4 1/2 NRP 32D ST

1 Lockset 45H-7D14N PATD 630 BE

1 Door Closer D-4551 STD W/PA BRKT SN 689 ST

1 Overhead Door Stop 100S US32D IV

1 Protection Plate K1050 10" x 2"LDW 4BE CSK US32D RO

1 Protection Plate K1050 10" x 2" LDW 4BE CSK US32D RO

1 Smoke Seal 5050B x Head & Jambs NA

SET #16 - Mechanic

3 Hinges CB1960R 4 1/2 x 4 1/2 NRP 32D ST

1 Lockset 45H-7D14N PATD 630 BE

1 Door Closer D-4551 STD W/PA BRKT SN 689 ST

1 Wall Bumper 401 US26D RO

1 Protection Plate K1050 10" x 2"LDW 4BE CSK US32D RO

1 Protection Plate K1050 10" x 2" LDW 4BE CSK US32D RO

1 Smoke Seal 5050B x Head & Jambs NA

SET #17 - Storage

3 Hinges CB1960R 4 1/2 x 4 1/2 32D ST

1 Lockset 45H-7D14N PATD 630 BE

1 Overhead Door Stop C01541 US32D AB

3 Door Silencers 608 GREY RO

SET #18 - IT/HVAC

3 Hinges CB1960R 4 1/2 x 4 1/2 32D ST

1 Lockset 45H-7AB14N PATD 630 BE

1 Overhead Door Stop C01541 US32D AB

3 Door Silencers 608 GREY RO

Opening List

Opening	Hdw Set Opening Label
E1	Set #1
E2	Set #1
E3	Set #2
E4	Set #2
E5	Set #2
E6	Set #2
E7	Set #2
F1	Set #3
F2	Set #3
F3	Set #3
101	SET #11
102	SET #11
103	SET #11
104	SET #11
104A	SET #16
105	SET #10
106	SET #17
107	SET #12
108	SET #14
109	SET #12
109A	SET #13
110	SET #15
112	SET #13
202	SET #18
203	SET #18

END OF SECTION

SECTION 08800

GLAZING

PART 1 – GENERAL

All exterior glazing shall be pre-approved by TDI, be impact resistant windows as per TDI requirements, and shall be good for the wind pressures shown on the structural drawings.

1.01 SECTION INCLUDES

A. Glass.

1.02 RELATED SECTIONS

A. Section 06200 - Finish Carpentry: Interior window components with requirement for glass.

B. Section 08589 – Exterior Aluminum Windows: Glazed windows.

1.03 REFERENCES

A. 16 CFR 1201 - Safety Standard for Architectural Glazing Materials; 2003.

B. ASTM C 1193 - Standard Guide for Use of Joint Sealants; 2000.

C. GANA (SM) - FGMA Sealant Manual; Glass Association of North America; 1990.

D. Texas Windstorm requirements as amended by the State Board of Insurance.

1.04 SUBMITTALS

A. See Section 01300 - Administrative Requirements, for submittal procedures.

B. Product Data on Glass Types: Provide structural, physical and environmental characteristics, size limitations, special handling or installation requirements.

C. Samples: Submit two samples 12 x 12 inch in size of glass units, showing coloration and design.

1.05 QUALITY ASSURANCE

A. Installer Qualifications: Company specializing in performing the work of this section with minimum 5 years documented experience.

1.06 ENVIRONMENTAL REQUIREMENTS

A. Do not install glazing when ambient temperature is less than 50 degrees F.

B. Maintain minimum ambient temperature before, during and 24 hours after installation of glazing compounds.

1.07 WARRANTY

A. See Section 01780 - Closeout Submittals, for additional warranty requirements.

B. Provide a five (5) year warranty to include coverage for delamination of laminated glass and replacement of same.

PART 2 - PRODUCTS

2.01 FLAT GLASS MATERIALS

A. Manufacturers:

1. Old Castle Glass – Vistawall for impact galss.

2. Pilkington Building Products North America: www.pilkington.com.
3. PPG Industries, Inc: www.ppg.com, product specified below
4. Substitutions: Refer to Section 01600 - Product Requirements.
5. AFG Industries, Inc: www.afgglass.com.

B. Safety Glass: Color as scheduled; fully tempered with horizontal tempering.

1. 1. Laminated with 0.015 inch thick plastic interlayer; comply with ASTM C 1172, where so scheduled.
2. Comply with 16 CFR 1201 test requirements for Category II.
3. 6 mm minimum thick
4. Provide this type of glazing in the locations required by code or where shown on drawings.

C. Impact Resistant Glass: Series FG-5100 “STORM MAX™” by Old Castle Glass®, Vistalwall®

1. Large Missle Impact “ Storm Glass” hurricane resistant glass
2. 1- 5/16” overall thickness insulating laminated glass
3. Typical for all exterior glazing including door.
4. Outer ¼” layer PPG vista cool with sungate 500 low-E “Solar” (grey) – submit samples 12” x 12” for final approval. Shading coefficient of .40 with 0.34 with solar heat gain coefficient
5. Inner layer 9/16” tempered impact with 1/2" air space for an overall glazing section of 1-5/16” for air conditioned spaces.
6. Testing ASTM E1886, E1996 Entrance Door MSD-375 Impact Resistant.

2.02 GLAZING ACCESSORIES

A. Setting Blocks: Neoprene, 80 to 90 Shore A durometer hardness, ASTM C 864 Option II. Length of 0.1 inch for each square foot of glazing or minimum 4 inch x width of glazing rabbet space minus 1/16 inch x height to suit glazing method and pane weight and area.

B. Spacer Shims: Neoprene, 50 to 60 Shore A durometer hardness, ASTM C 864 Option II. Minimum 3 inch long x one half the height of the glazing stop x thickness to suit application, self adhesive on one face.

C. Product Specifications (Minimum Perofrmance):

Visible light transmittance 57%

Total solar transmittance 24%

Total solar reflectance 7%

Visible light reflectance 12%

Winter U-value 0.35

Solar heat gain coefficient 0.34

Shading coefficient 0.40

Total solar energy rejected 7%

PART 3 - EXECUTION

3.01 EXAMINATION

A. Verify that openings for glazing are correctly sized and within tolerance.

B. Verify that surfaces of glazing channels or recesses are clean, free of obstructions that may impede moisture movement; weeps are clear, and ready to receive glazing.

3.02 PREPARATION

A. Clean contact surfaces with solvent and wipe dry.

B. Seal porous glazing channels or recesses with substrate compatible primer or sealer.

C. Prime surfaces scheduled to receive sealant.

D. Install sealants in accordance with ASTM C 1193 and FGMA Sealant Manual.

E. Install sealant in accordance with manufacturer's instructions.

3.03 INSTALLATION - EXTERIOR WET/DRY METHOD (GASKET AND SEALANT)

A. Place setting blocks at 1/4 points with edge block no more than 6 inches from corners.

B. Rest glazing on setting blocks and push against fixed stop with sufficient pressure on gasket to attain full contact.

C. Apply sealant to uniform line, flush with sight line. Tool or wipe sealant surface smooth.

3.04 INSTALLATION - INTERIOR DRY METHOD (TAPE AND TAPE)

A. Cut glazing tape to length and set against permanent stops, projecting 1/16 inch (1.6 mm) above sight line.

B. Place setting blocks at 1/4 points with edge block no more than 6 inches from corners.

C. Rest glazing on setting blocks and push against tape for full contact at perimeter of pane or unit.

D. Place glazing tape on free perimeter of glazing in same manner described above.

E. Install removable stop without displacement of tape. Exert pressure on tape for full continuous contact.

F. Knife trim protruding tape.

3.05 CLEANING

A. Remove glazing materials from finish surfaces.

B. Remove labels after Work is complete.

C. Clean glass and adjacent surfaces.

3.06 PROTECTION OF FINISHED WORK

A. After installation, mark pane with an 'X' by using removable plastic tape or paste; do not mark heat absorbing or reflective glass units.

B. Submit testing certification for all impact glass for owner’s record.

END OF SECTION

SECTION 08910

LOUVERS

PART 1 - GENERAL

1.01 SECTION INCLUDES

A. Louvers, frames, and accessories for intake and exhaust conditions.

B. Reference drawings: Mechanical, architectural and structural concrete panel drawings for locations.

C. Verify sizes and locations with mechanical subcontractor for a complete installation.

1.02 REFERENCES

A. AAMA 611 - Voluntary Specification for Anodized Architectural Aluminum; American Architectural Manufacturers Association; 1998.

B. AMCA 500-L - Laboratory Methods of Testing Louvers for Rating; Air Movement and Control Association International, Inc.; 1999.

1.03 SUBMITTALS

A. See Section 01300 - Administrative Requirements, for submittal procedures.

B. Product Data: Provide data describing design characteristics, maximum recommended air velocity, design free area, materials and finishes.

C. Shop Drawings: Indicate louver layout plan and elevations, opening and clearance dimensions, tolerances; head, jamb and sill details; blade configuration, screens, blankout areas required, and frames.

D. Test Reports: Independent agency reports showing compliance with specified performance criteria.

1.04 QUALITY ASSURANCE

A. Manufacturer Qualifications: Company specializing in manufacturing products of the type specified in this section, with minimum three years of documented experience.

1.05 PROJECT CONDITIONS

A. Coordinate work of this section with installation of mechanical ductwork.

1.06 WARRANTY

A. See Section 01780 - Closeout Submittals, for additional warranty requirements.

B. Provide twenty year manufacturer warranty against distortion, metal degradation, and failure of connections.

1. Finish: Include coverage against degradation of exterior finish.

PART 2 – PRODUCTS

2.01 MANUFACTURERS

A. Wall Louvers:

1. Airline Products; Product LSA6D-DC.

2. C/S Louvers; Product DC-7044.

3. Greenheck; Product ESD-603D.
4. Substitutions: See Section 01600 - Product Requirements.

2.02 LOUVERS

A. Louvers: Factory fabricated and assembled, complete with frame, mullions, and accessories.
   1. Wind Load Resistance: Design to resist positive and negative wind load 150 mph without damage or permanent deformation.
   2. Certification: Miami-Dade County; PA-100(A), PA-201, PA-202, and PA-203.
   3. Intake Louvers: Design to allow maximum of 0.01 oz/sqft water penetration at calculated intake design velocity based on design air flow and actual free area, when tested in accordance with AMCA 500-L.
   4. Drainable Blades: Continuous rain stop at front or rear of blade aligned with vertical gutter recessed into both jambs of frame.
   5. Screens: Provide insect screens at intake louvers and bird screens at exhaust louvers.
B. Stationary Louvers: Horizontal blade, extruded aluminum construction, with intermediate mullions matching frame.
   1. Free Area: 48 percent, minimum.
   2. Blades: Straight.
   3. Frame: Depth as required (7" maximum), channel profile; corner joints mitered and mechanically fastened, with continuous recessed caulking channel each side.
   4. Metal Thickness: Frame 0.125 inch; blades 0.125 inch.
   5. Finish: Baked enamel - modified fluoropolymer.

2.03 MATERIALS

A. Extruded Aluminum: ASTM B 221 (ASTM B 221M).
   1. Finish: Baked enamel - modified fluoropolymer.
B. Bird Screen: Interwoven wire mesh of aluminum, 0.063 inch diameter wire, 1/2 inch open weave, square design.

2.04 ACCESSORIES

A. Blank-Off Panels: Same material as louver, painted black on exterior side; provide where duct connected to louver is smaller than louver frame, sealing off louver area outside duct.
B. Screens: Frame of same material as louver, with reinforced corners; removable, screw attached; installed on inside face of louver frame.
C. Fasteners and Anchors: Stainless steel with butyl separation sheet.
D. Flashings: Of same material as louver frame, formed to required shape, single length in one piece per location.

PART 3 - EXECUTION

3.01 EXAMINATION

A. Verify that prepared openings and flashings are ready to receive work and opening dimensions are as indicated on shop drawings.

B. Verify that field measurements are as indicated.

3.02 INSTALLATION

A. Install louver assembly in accordance with manufacturer's instructions.

B. Install louvers level and plumb.

C. Install flashings and align louver assembly to ensure moisture shed from flashings and diversion of moisture to exterior.

D. Secure louver frames in openings with concealed fasteners.

E. Install perimeter sealant and backing rod in accordance with Section 07900.

3.03 CLEANING

A. Strip protective finish coverings.

B. Clean surfaces and components.

END OF SECTION

SECTION 09260

GYPSUM BOARD ASSEMBLIES

PART 1 - GENERAL

1.01 SECTION INCLUDES

A. Fire rated area separation walls.

B. Acoustic insulation.

C. Gypsum wallboard.

D. Joint treatment and accessories.

1.02 RELATED SECTIONS

A. Section 05400 - Cold Formed Metal Framing: Exterior wind-load-bearing metal stud framing.

B. Section 06100 - Rough Carpentry: Building framing and sheathing.

C. Section 07212 - Board and Batt Insulation: Acoustic insulation.

D. Section 07900 - Joint Sealers: Acoustic sealant.

1.03 REFERENCES

A. AISI SG-971 - Specification for the Design of Cold-Formed Steel Structural Members; 1996, with 2000 Supplement.

B. ASTM A 653/A 653M - Standard Specification for Steel Sheet, Zinc-Coated (Galvanized) or Zinc-Iron Alloy-Coated (Galvannealed) by the Hot-Dip Process; 2003.

C. ASTM C 36/C 36M - Standard Specification for Gypsum Wallboard; 2001.

D. ASTM C 475/C 475M - Standard Specification for Joint Compound and Joint Tape for Finishing Gypsum Board; 2002.

E. ASTM C 645 - Standard Specification for Nonstructural Steel Framing Members; 2004.

F. ASTM C 665 - Standard Specification for Mineral-Fiber Blanket Thermal Insulation for Light Frame Construction and Manufactured Housing; 2001.

G. ASTM C 754 - Standard Specification for Installation of Steel Framing Members to Receive Screw-Attached Gypsum Panel Products; 2000.

H. ASTM C 840 - Standard Specification for Application and Finishing of Gypsum Board; 2004.

I. ASTM C 954 - Standard Specification for Steel Drill Screws for the Application of Gypsum Panel Products or Metal Plaster Bases to Steel Studs From 0.033 in. (0.84 mm) to 0.112 in. (2.84 mm) in Thickness; 2000.

J. ASTM C 1047 - Standard Specification for Accessories for Gypsum Wallboard and Gypsum Veneer Base; 1999.

K. ASTM C 1396/C 1396M - Standard Specification for Gypsum Board; 2003a.

L. ASTM D 3273 - Standard Test Method for Resistance to Growth of Mold on the Surface of Interior Coatings in an Environmental Chamber; 2000.

M. GA-600 - Fire Resistance Design Manual; Gypsum Association; 2003.

N. UL (FRD) - Fire Resistance Directory; Underwriters Laboratories Inc.; current edition.

1.04 SYSTEM DESCRIPTION

A. Acoustic Attenuation for Interior Partitions Indicated to receive Sound Attenuation: STC of 45- 49 calculated in accordance with ASTM E 413, based on tests conducted in accordance with ASTM E 90.

1.05 SUBMITTALS

A. See Section 01300 - Administrative Requirements, for submittal procedures.

B. Product Data: Provide data on metal framing, gypsum board, accessories, and joint finishing system.

C. Product Data: Provide manufacturer's data on partition head to structure connectors, showing compliance with requirements.

1.06 QUALITY ASSURANCE

A. Perform in accordance with ASTM C 840. Comply with requirements of GA-600 for fire-rated assemblies.

1. Maintain one copy of standards at project site.

A. Applicator Qualifications: Company specializing in performing gypsum board application and finishing, with minimum 5 years of documented experience.

1.07 REGULATORY REQUIREMENTS

A. Conform to applicable code for fire rated assemblies as follows:

1. Fire Rated Partitions: Listed assembly by UL, No. U305; 1 hour rating.

PART 2 - PRODUCTS

2.01 METAL FRAMING MATERIALS

A. Metal Framing Manufacturers:

1. Clark Steel Framing Systems: www.clarksteel.com.

2. Dale/Incor: www.daleincor.com.

3. Dietrich Metal Framing, Inc: www.dietrichindustries.com.

4. Marino-Ware: www.marinoware.com.

5. Substitutions: See Section 01600 - Product Requirements.

B. Metal Framing Connectors and Accessories:

1. Same manufacturer as framing.

C. Non-Loadbearing Framing System Components: ASTM C 645; galvanized sheet steel, of size and properties necessary to comply with ASTM C 754 for the spacing indicated, with maximum deflection of wall framing of L/240 at 5 psf.

1. Studs: C shaped with knurled faces.

2. Runners: U shaped, sized to match studs.

3. Furring: Hat-shaped sections, minimum depth of 7/8 inch.

D. Loadbearing Studs for Application of Gypsum Board: As specified in Section 05400.

E. Partition Head to Structure Connections: Provide mechanical anchorage devices that accommodate deflection using slotted holes, screws and anti-friction bushings, preventing rotation of studs while maintaining structural performance of partition.

1. Structural Performance: Maintain lateral load resistance and vertical movement capacity required by applicable code, when evaluated in accordance with AISI SG-971 Specification for the Design of Cold-Formed Steel Structural Members.

2. Material: ASTM A 653/A 653M steel sheet, SS Grade 50, with G60/Z180 hot dipped galvanized coating.

2.02 GYPSUM BOARD MATERIALS

A. Manufacturers:

1. G-P Gypsum Corporation: www.gp.com.

2. National Gypsum Company: www.nationalgypsum.com.

3. USG Corporation: www.usg.com.

4. Substitutions: See Section 01600 - Product Requirements.

B. Gypsum Wallboard: ASTM C 36/C 36M and ASTM C 1396/C 1396M. Sizes to minimize joints in place; ends square cut.

1. Abuse Resistant Type:

a. Application: Use for vertical surfaces, unless otherwise indicated.

b. Thickness: 5/8 inch.

c. Edges: Tapered.

d. Mold Score: Score of 10 on the ASTM D3273-00 “Standard Test Method for Resistance to Growth of Mold on the Surface of Interior Coatings in an Environmental Chamber,” Fiberock Interior Panels.

2. Moisture & Mold Resistant:

a. Application: Restrooms, Janitor, and at Kitchen area.

b. ASTM C1396 (Section 5), regular type except where Type X fire-resistant type is indicated or required to meet UL assembly types.

c. Edges: Tapered.

d. Thickness: 5/8 inch.

3. Cement Backer Board:

a. Aggregated Portland cement board with woven glass fiber mesh facing; complying with ANSI A118.9.

b. Thickness: ½ inch.

c. Acceptable product and manufacturer: Durock Cement Board by USG or equal.

2.03 ACCESSORIES

A. Acoustic Insulation: ASTM C 665; preformed glass fiber, friction fit type, unfaced. Thickness: 3 inch.

B. Acoustic Sealant: As specified in Section 07900.

C. Finishing Accessories: ASTM C 1047, galvanized steel or rolled zinc, unless otherwise indicated.

1. Types: As detailed or required for finished appearance.

2. Special Shapes: In addition to conventional corner bead and control joints, provide Ubead at exposed panel edges.

D. Joint Materials: ASTM C 475 and as recommended by gypsum board manufacturer for project conditions.

1. Tape: 2 inch wide, coated glass fiber tape for joints and corners, except as otherwise indicated.

2. Ready-mixed vinyl-based joint compound.

3. Chemical hardening type compound.

E. Screws: ASTM C 954; steel drill screws for application of gypsum board to loadbearing steel studs.

PART 3 - EXECUTION

3.01 EXAMINATION

A. Verify that project conditions are appropriate for work of this section to commence.

3.02 FRAMING INSTALLATION

A. Metal Framing: Comply with ASTM C 754 and manufacturer's instructions.

B. Studs: Space studs at 16 inches on center.

1. Extend partition framing to structure where indicated and to ceiling in other locations.

2. Partitions Terminating Above Ceiling: Attach ceiling runner securely to ceiling track in accordance with manufacturer's instructions.

3. Partitions Terminating at Structure: Provide Deflection Track and install per manufacturer's instructions.

C. Openings: Reinforce openings as required for weight of doors or operable panels, using not less than double studs at jambs.

D. Blocking: Install blocking for support of plumbing fixtures, toilet partitions, toilet accessories, and hardware. Bolt or screw steel channels to studs, or Contractor's option, comply with Section 06100 for wood blocking.

3.03 ACOUSTIC ACCESSORIES INSTALLATION

A. Acoustic Insulation: Place tightly within spaces, around cut openings, behind and around electrical and mechanical items within partitions, and tight to items passing through partitions.

B. Acoustic Sealant: Install in accordance with manufacturer's instructions.

1. Place one bead continuously on substrate before installation of framing members.

2. Place continuous bead at perimeter of each layer of gypsum board.

3. In non-fire-rated construction, seal around all penetrations by conduit, pipe, ducts, and rough-in boxes.

3.04 GYPSUM BOARD AND GLASS MAT FACED BOARD INSTALLATION

A. Comply with ASTM C 840 and manufacturer's instructions. Install to minimize butt end joints, especially in highly visible locations.

B. Single-Layer Non-Rated: Install gypsum board in most economical direction, with ends and edges occurring over firm bearing.

C. Fire-Rated Construction: Install gypsum board in strict compliance with requirements of listing authority.

D. Glass Mat Faced Gypsum Board: Install in strict accordance with manufacturer's instructions.

E. Installation on Metal Framing: Use screws for attachment of all gypsum board.

F. Installation on Wood Framing: For rated assemblies, comply with requirements of listing authority. For non-rated assemblies, install as follows:

1. Single-Layer Applications: Screw attachment.

G. Moisture Protection: Treat cut edges and holes in moisture resistant gypsum board with sealant.

3.05 INSTALLATION OF TRIM AND ACCESSORIES

A. Control Joints: Place control joints consistent with lines of building spaces and as indicated.

1. Not more than 30 feet apart on walls over 50 feet long.

B. Corner Beads: Install at external corners, using longest practical lengths.

C. Edge Trim: Install at locations where gypsum board abuts dissimilar materials and as indicated.

3.06 JOINT TREATMENT

A. Glass Mat Faced Gypsum Board: Use fiberglass joint tape, bedded and finished with chemical hardening type joint compound.

B. Paper Faced Gypsum Board: Use fiberglass joint tape, bedded with ready-mixed vinyl-based joint compound and finished with ready-mixed vinyl-based joint compound.

C. Finish gypsum board in scheduled areas in accordance with levels defined in ASTM C 840 and as scheduled below.

D. Tape, fill, and sand exposed joints, edges, and corners to produce smooth surface ready to receive finishes.

1. Feather coats of joint compound so that camber is maximum 1/32 inch.

3.07 TOLERANCES

A. Maximum Variation of Finished Gypsum Board Surface from True Flatness: 1/8 inch in 10 feetin any direction.

3.08 FINISH LEVEL SCHEDULE

A. LEVEL 1: Temporary partitions to be removed prior to final occupancy. No taping, finishing, or accessories required.

B. LEVEL 2: Concealed areas above ceiling. Joints and interior corners shall have tape embedded in joint compound. Surface shall be free of excessive joint compound. Tool marks and ridges are acceptable.

C. LEVEL 3: Water resistant gypsum board or tile backer board serving as ceramic tile substrate. Joints and interior corners shall have tape embedded in joint compound and a separate coat of joint compound applied over joints, interior corners, fastener heads, and accessories. Surface shall be free of excessive joint compound. Tool marks and ridges are acceptable.

D. LEVEL 4: Mechanical, electrical, custodial, storage, maintenance and telephone rooms. Joints and interior corners shall have tape embedded in joint compound and two separate coats of joint compound applied over all joints, interior corners, fastener heads, and accessories. Joint compound shall be smooth and free of tool marks and ridges.

E. LEVEL 5: All other drywall areas scheduled for paint, fabric, or vinyl wall covering. Joints and interior corners shall have tape embedded in joint compound and three coats of joint compound applied over all joints, interior corners, fastener heads, and accessories. Joint compound shall be smooth and free of tool marks and ridges.

END OF SECTION

SECTION 09300

TILE

PART 1 - GENERAL

1.01 SECTION INCLUDES

A. Tile for wall applications.

B. Tile for floor applications.

1.02 REFERENCES

A. ANSI A108 Series/A118 Series/A136.1 - American National Standard Specifications for the Installation of Ceramic Tile (Compendium); 1999.

B. ANSI A108.1a - American National Standard Specifications for Installation of Ceramic Tile in the Wet-Set Method, with Portland Cement Mortar; 1999.

C. ANSI A108.1b - American National Standard Specifications for Installation of Ceramic Tile on a Cured Portland Cement Mortar Setting Bed with Dry-Set or Latex Portland Cement Mortar; 1999.

D. ANSI A108.1c - Specifications for Contractors Option: Installation of Ceramic Tile in the Wet- Set Method with Portland Cement Mortar or Installation of Ceramic Tile on a Cured Portland Cement Mortar Bed with Dry-Set or Latex Portland Cement Mortar; 1999.

E. ANSI A108.4 - American National Standard Specifications for Installation of Ceramic Tile with Organic Adhesives or Water Cleanable Tile Setting Epoxy Adhesive; 1999.

F. ANSI A108.5 - American National Standard Specifications for Installation of Ceramic Tile with Dry-Set Portland Cement Mortar or Latex-Portland Cement Mortar; 1999.

G. ANSI A108.6 - American National Standard Specifications for Installation of Ceramic Tile with Chemical Resistant, Water Cleanable Tile-Setting and -Grouting Epoxy; 1999.

H. ANSI A108.8 - American National Standard Specifications for Installation of Ceramic Tile with Chemical Resistant Furan Mortar and Grout; 1999.

I. ANSI A108.9 - American National Standard Specifications for Installation of Ceramic Tile with Modified Epoxy Emulsion Mortar/Grout; 1999.

J. ANSI A108.10 - American National Standard Specifications for Installation of Grout in Tilework; 1999.

K. ANSI A118.6 - American National Standard Specifications for Standard Cement Grouts for Tile Installation; 1999.

L. ANSI A118.7 - American National Standard Specifications for Polymer Modified Cement Grouts for Tile Installation; 1999.

M. ANSI A136.1 - American National Standard for Organic Adhesives for Installation of CeramicTile; 1999.

N. ANSI A137.1 - American National Standard Specifications for Ceramic Tile; 1988.

O. TCA (HB) - Handbook for Ceramic Tile Installation; Tile Council of America, Inc.; 2004.

1.03 SUBMITTALS

A. See Section 01300 - Administrative Requirements, for submittal procedures.

B. Product Data: Provide manufacturers' data sheets on tile, mortar, grout, and accessories. Include instructions for using grouts and adhesives.

C. Maintenance Data: Include recommended cleaning methods, cleaning materials, stain removal methods, and polishes and waxes.

1.03 QUALITY ASSURANCE

A. Maintain one copy of TCA Handbook and ANSI A108 Series/A118 Series on site.

B. Installer Qualifications: Company specializing in performing tile installation, with minimum of 5 years of documented experience.

1.04 DELIVERY, STORAGE, AND HANDLING

A. Protect adhesives from freezing or overheating in accordance with manufacturer's instructions.

1.05 ENVIRONMENTAL REQUIREMENTS

A. Do not install adhesives in an unventilated environment.

B. Maintain ambient and substrate temperature of 50 degrees F during installation of mortar materials.

1.06 EXTRA MATERIALS

A. Provide 10 sq. ft of each size, color, and surface finish of tile specified.

PART 2 - PRODUCTS

2.01 TILE

A. Glazed Wall Tile: ANSI A137.1, and as follows:

1. "Natural Hues" manufactured by Daltile or approved equivalent product.
2. Moisture Absorption: <4.0%.
3. Size and Shape: 3 x 6 inch with matching cove base.
4. Edges: Cushioned.
5. Surface Finish: High gloss.
6. Colors: To be selected from manufacturer's standard range.
7. Trim Units: Bullnose, cove, and base shapes in sizes coordinated with field tile.

B. Floor Tile: 8 x 8

1. Porcelain Tile - Datile Porcealto Graniti or approved equivalent product.
2. Moisture Absorption: <0.5%.
3. Size and Shape: 8" square.
4. Surface Finish: unpolished.
5. Colors: To be selected from manufacturer's standard range.

2.02 TRIM AND ACCESSORIES

A. Ceramic Trim: Matching bullnose, double bullnose, cove base, and cove ceramic shapes in sizes coordinated with field tile.
   1. Applications: Use in the following locations:
      a) Open Edges: Bullnose.
      b) Inside Corners: Jointed.
      c) Floor to Wall Joints: Cove base.
   2. Manufacturer: Same as for tile.
B. Door Thresholds: Marble Thresholds, ADA compliant.
   1. Color and finish from manufacturer's full line.

2.03 ADHESIVE MATERIALS

A. Manufacturers:
   1. W.R. Bonsal Co.
   2. Bostik: www.bostik.com.
   3. Mapei Corporation: www.mapei.com.
   4. Substitutions: See Section 01600 - Product Requirements.
B. Organic Adhesive: ANSI A136.1, thinset bond type; use Type I in areas subject to prolonged moisture exposure.

2.04 GROUT MATERIALS

A. Manufacturers:
   1. W.R. Bonsal Co: www.bonsal.com.
   2. Bostik: www.bostik.com.
   3. Custom Building Products: www.custombuildingproducts.com.
   4. Substitutions: See Section 01600 - Product Requirements.
B. Standard Grout: Any type specified in ANSI A118.6 or A118.7.
   1. Color: As selected.

PART 3 - EXECUTION

3.01 EXAMINATION

A. Verify that sub-floor surfaces are dust-free and free of substances which would impair bonding of setting materials to sub-floor surfaces.
B. Verify that concrete sub-floor surfaces are ready for tile installation by testing for moisture emission rate and alkalinity; obtain instructions if test results are not within limits recommended by tile manufacturer and setting materials manufacturer.
C. Verify that required floor-mounted utilities are in correct location.

3.02 PREPARATION

A. Protect surrounding work from damage.
B. Vacuum clean surfaces and damp clean.

C. Seal substrate surface cracks with filler. Level existing substrate surfaces to acceptable flatnesstolerances.

D. Prepare substrate surfaces for adhesive installation in accordance with adhesive manufacturer's instructions.

3.03 INSTALLATION - GENERAL

A. Install tile and thresholds and grout in accordance with applicable requirements of ANSI A108.1 through A108.13, manufacturer's instructions, and TCA Handbook recommendations.

B. Lay tile to pattern indicated. Do not interrupt tile pattern through openings.

C. Cut and fit tile to penetrations through tile, leaving sealant joint space. Form corners and bases neatly. Align floor joints.

D. Place tile joints uniform in width, subject to variance in tolerance allowed in tile size. Make joints watertight, without voids, cracks, excess mortar, or excess grout.

E. Form internal angles square and external angles bullnosed.

F. Sound tile after setting. Replace hollow sounding units.

G. Keep expansion joints free of adhesive or grout. Apply sealant to joints.

H. Allow tile to set for a minimum of 48 hours prior to grouting.

I. Grout tile joints. Use standard grout unless otherwise indicated.

J. Apply sealant to junction of tile and dissimilar materials and junction of dissimilar planes.

3.04 INSTALLATION - FLOORS - MUD-SET METHODS

A. Over interior concrete substrates, install in accordance with TCA Handbook Method TCA F101, set in mortar bed, slope to draing, slope not to exceed 1/8" per ft., grout with standard grout, unless otherwise indicated.

3.05 INSTALLATION -WALL TILE

A. Over backer board on studs, install in accordance with TCA Handbook Method W245.

3.06 CLEANING

A. Clean tile and grout surfaces.

3.07 PROTECTION OF FINISHED WORK

A. Do not permit traffic over finished floor surface for 4 days after installation.

END OF SECTION

SECTION 09510

ACOUSTICAL CEILINGS

PART 1 - GENERAL

1.01 SECTION INCLUDES:

A. Suspended metal grid ceiling system.

B. Acoustical units.

1.02 REFERENCES

C. ASTM C 635 - Standard Specification for the Manufacture, Performance, and Testing of Metal Suspension Systems for Acoustical Tile and Lay-in Panel Ceilings; 2000.

D. ASTM C 636 - Standard Practice for Installation of Metal Ceiling Suspension Systems for Acoustical Tile and Lay-in Panels; 2003.

E. ASTM E 580 - Standard Practice for Application of Ceiling Suspension Systems for Acoustical Tile and Lay-in Panels in Areas Requiring Seismic Restraint; 2002.

F. ASTM E 1264 - Standard Classification for Acoustical Ceiling Products; 1998.

1.03 SUBMITTALS

A. See Section 01300 - Administrative Requirements, for submittal procedures.

B. Samples: Submit two samples 6 x 6 inch in size illustrating material and finish of acoustical units.

C. Samples: Submit two samples each, 12 inches long, of suspension system main runner, cross runner, and perimeter molding.

D. Manufacturer's Installation Instructions: Indicate special procedures and perimeter conditions requiring special attention.

1.04 ENVIRONMENTAL REQUIREMENTS

A. A. Maintain uniform temperature of minimum 60 degrees F, and maximum humidity of 40 percent prior to, during, and after acoustical unit installation.

1.05 PROJECT CONDITIONS

A. Sequence work to ensure acoustical ceilings are not installed until building is enclosed, sufficient heat is provided, dust generating activities have terminated, and overhead work is completed, tested, and approved.

B. Install acoustical units after interior wet work is dry.

1.06 EXTRA MATERIALS

A. See Section 01600 - Product Requirements, for additional provisions.

B. Provide 50 sqft of each type of acoustical unit for Owner's use in maintenance of project.

PART 2 - PRODUCTS

2.01 ACOUSTICAL UNITS

A. Manufacturers:

1. Armstrong World Industries, Inc: www.armstrong.com.

2. BPB Celotex: www.bpb-na.com.
3. USG Corporation: www.usg.com.
4. Substitutions: See Section 01600 - Product Requirements.

B. Acoustical Units - General: ASTM E 1264, Class A.

C. Acoustical Panels: Typical, Interior.

5. Size: 24 x 24 inches.
6. Light Reflectance: 87 percent, determined as specified in ASTM E 1264.
7. NRC Range: 0.70 to 0.75, determined as specified in ASTM E 1264.
8. Articulation Class: 170 or greater, determined as specified in ASTM E 1264.
9. Panel Edge: Tegular.
10. Surface Pattern: Fissured.
11. Surface Color: White.
12. Product: "Fine Fissured Open Plan" Fire Rated Class A USG Frost Clima Plus #4414 Tegular Tile SLB 2 x 2 x 3/4'" ASTM 635 paper back #414 (white).
13. Suspension System: Exposed grid.

D. Acoustical Panels: Damp Locations, Interior.

1. Size: 24 x 24 inches.
2. Light Reflectance: 72 percent, determined as specified in ASTM E 1264.
3. NRC Range: 0.68 to 0.72, determined as specified in ASTM E 1264.
4. Articulation Class: 170 or greater, determined as specified in ASTM E 1264.
5. Panel Edge: Square.
6. Surface Pattern: Fine Texture.
7. Surface Color: White.
8. Product: Armstrong Shasta ASTM 635 (white).
9. Suspension System: Exposed grid.

E. Locations: Ref. reflected ceiling plan on drawings and room finish schedule

2.02 SUSPENSION SYSTEM(S)

A. Manufacturers:

10. Armstrong World Industries, Inc: www.ceilings.com.
11. Chicago Metallic Corporation: www.chicagometallic.com.
12. USG Corporation: www.usg.com.
13. Substitutions: See Section 01600 - Product Requirements.

B. Suspension Systems

1. Interior: ASTM C 635; die cut and interlocking components, with stabilizer bars, clips, splices, perimeter moldings, and hold down clips as required.

C. Exposed Aluminum Suspension System: Aluminum Tees, commercial quality cold rolled; intermediate-duty with aluminum clad.

1. Profile: Tee; 15/16 inch wide face. Ref. USG DXLA Fire Rated
2. Construction: Double web.
3. Cap: Aluminum.
4. Finish: Painted white.

2.03 ACCESSORIES

A. Support Channels and Hangers: Aluminum; size and type to suit application and ceiling system flatness requirement specified.

B. Perimeter Moldings: Same material and finish as grid.

5. At Exposed Grid: Provide L-shaped molding for mounting at same elevation as face of grid.

PART 3 - EXECUTION

3.01 EXAMINATION

A. Verify existing conditions before starting work.

B. Verify that layout of hangers will not interfere with other work.

3.02 INSTALLATION - SUSPENSION SYSTEM

A. Install suspension system in accordance with ASTM C 636, ASTM E 580, and manufacturer's instructions and as supplemented in this section.

B. Rigidly secure system, including integral mechanical and electrical components, for maximum deflection of 1:360.

C. Locate system on room axis according to reflected plan.

D. Install after major above-ceiling work is complete. Coordinate the location of hangers with other work.

E. Hang suspension system independent of walls, columns, ducts, pipes and conduit. Where carrying members are spliced, avoid visible displacement of face plane of adjacent members.

F. Where ducts or other equipment prevent the regular spacing of hangers, reinforce the nearest affected hangers and related carrying channels to span the extra distance.

G. Do not support components on main runners or cross runners if weight causes total dead load to exceed deflection capability.

H. Support fixture loads using supplementary hangers located within 6 inches of each corner, or support components independently.

I. Do not eccentrically load system or induce rotation of runners.

J. Perimeter Molding: Install at intersection of ceiling and vertical surfaces and at junctions with other interruptions.

1. Use longest practical lengths.
2. Overlap and rivet corners.

3.03 INSTALLATION - ACOUSTICAL UNITS

A. Install acoustical units in accordance with manufacturer's instructions.

B. Fit acoustical units in place, free from damaged edges or other defects detrimental to appearance and function.

C. Fit border trim neatly against abutting surfaces.

D. Install units after above-ceiling work is complete.

E. Install acoustical units level, in uniform plane, and free from twist, warp, and dents.

F. Cutting Acoustical Units:

1. Make field cut edges of same profile as factory edges.

G. Where round obstructions occur, provide preformed closures to match perimeter molding.

H. Install hold-down clips on all exterior panels.

3.04 ERECTION TOLERANCES

A. Maximum Variation from Flat and Level Surface: 1/8 inch in 10 feet.

B. Maximum Variation from Plumb of Grid Members Caused by Eccentric Loads: 2 degrees.

END OF SECTION

SECTION 09772

FIBERGLASS REINFORCED PANELS

1.0 GENERAL

1.01 SUMMARY

A. Section Includes: Prefinished polyester glass reinforced plastic sheets and adhered to unfinished gypsum wallboard.

1. PVC trim.

B. Products Not Furnished or Installed under This Section:

1. Gypsum substrate board.
2. Resilient Base.

1.02 RELATED SECTIONS

A. Section 09221 – Gypsum board assemblies.

B. Section 05400 - Metal Stud Framing

C. Section 09900 - Painting & Coating.

D. Section 09651 - Resilient Base.

1.03 REFERENCES

E. American Society for Testing and Materials: Standard Specifications (ASTM)

1. ASTM D 256 - Izod Impact Strengths (ft #/in)
2. ASTM D 570 - Water Absorption (%)
3. ASTM D 638 - Tensile Strengths (psi) & Tensile Modulus (psi)
4. ASTM D 790 - Flexural Strengths (psi) & Flexural Modulus (psi)
5. ASTM D 2583- Barcol Hardness
6. ASTM D 5319 - Standard Specification for Glass-Fiber Reinforced Polyester Wall and Ceiling Panels.
7. ASTM E 84 - Standard Test Method for Surface Burning Characteristics of Building Materials.

1.04 SUBMITTALS

A. Product Data: Submit sufficient manufacturer's data to indicate compliance with these specifications, including:

1. Preparation instructions and recommendations.
2. Storage and handling requirements and recommendations.
3. Installation methods.

B. Samples for Verification: Submit appropriate section of panel for each finish selected indicating the color, texture, and pattern required.

1. Submit complete with specified applied finish.
2. Exposed Molding and Trim: Provide samples of each type, finish, and color.

1.05 Manufacturers Material Safety Data Sheets (MSDS) for adhesives, sealants and other pertinent materials prior to their delivery to the site

1.06 QUALITY ASSURANCE

C. Conform to building code requirements for interior finish for smoke and flame spread requirements as tested in accordance with:

1. ASTM E 84 (Method of test for surface burning characteristics of building Materials) Wall Required Rating – Class A.

A. Sanitary Standards: System components and finishes to comply with:

1. United States Department of Agriculture (USDA) requirements for food preparation facilities, incidental contact.
2. Food and Drug Administration (FDA) 1999 Food Code 6-101.11.
3. Canadian Food Inspection Agency (CFIA) requirements.

1.07 DELIVERY, STORAGE AND HANDLING

A. Deliver materials factory packaged on strong pallets.

B. Store panels and trim lying flat, under cover and protected from the elements. Allow panels to acclimate to room temperature (70°) for 48 hours prior to installation.

1.08 PROJECT CONDITIONS

A. Environmental Limitations: Building are to be fully enclosed prior to installation with sufficient heat (70°) and ventilation consistent with good working conditions for finish work

B. During installation and for not less than 48 hours before, maintain an ambient temperature and relative humidity within limits required by type of adhesive used and recommendation of adhesive manufacturer.

1. Provide ventilation to disperse fumes during application of adhesive as recommended by the adhesive manufacturer.

1.09 WARRANTY

A. Furnish one year guarantee against defects in material and workmanship.

PART 2 - PRODUCTS

2.01 MANUFACTURERS

A. Manufacturers that meet the performance criteria.

B. Product:

1. Standard FRP

2.02 PANELS

A. Fiberglass reinforced thermosetting polyester resin panel sheets complying with ASTM D 5319.

1. Coating: Multi-layer print, primer and finish coats or applied over-layer.
2. Dimensions:

a. Thickness – 0.090" nominal

b. Width - 4'-0" nominal

c. Length –8'-0" nominal

3. Tolerance:

d. Length and Width: +/-1/8"

e. Square - Not to exceed 1/8" for 8 foot panels or 5/32" for 10 foot panels

B. Properties: Resistant to rot, corrosion, staining, denting, peeling, and splintering.

4. Flexural Strength - 1.0 x 104 psi per ASTM D 790.
5. Flexural Modulus - 3.1 x 105 psi per ASTM D 790.
6. Tensile Strength - 7.0 x 103 psi per ASTM D 638.
7. Tensile Modulus - 1.6 x 105 psi per ASTM D 638.
8. Water Absorption - 0.72% per ASTM D 570.
9. Barcol Hardness (scratch resistance) of 35 55 as per ASTM D 2583.
10. Izod Impact Strength of 72 ft. lbs./in ASTM D 256

C. Back Surface: Smooth. Imperfections which do not affect functional properties are not cause for rejection.

E. Front Finish:

1. Color: White
2. Finish: Smooth
3. Fire Rating Class A (I) Fire Rating.
4. Size: 4' x 8' x .120"

2.05 MOLDINGS

A. PVC Trim: Thin-wall semi-rigid extruded PVC.

1. Inside Corner - continuous length determined by room height. No joints allowed.
2. Division - continuous length determined by room height. No joints allowed.
3. Edge - continuous length determined by room height. No joints allowed.
4. Color: White

2.06 ACCESSORIES

A. Specify rivets for use in areas with dramatic changes in temperature and/or humidity, where the substrate is unusually uneven, and in all low temperatures or cold storage applications.

1. Match panel colors.
2. Length to suit project conditions.

C. Adhesive: Either of the following construction adhesives complying with ASTM C 557.

D. Titebond Advanced Polymer Panel Adhesive – VOC compliant, non-flammable, environmentally safe adhesive.

E. Sealant: White Silicone Sealant.

PART 3 - EXECUTION

3.1 PREPARATION

A. Examine backup surfaces to determine that corners are plumb and straight, surfaces are smooth, uniform, clean and free from foreign matter, nails countersunk, joints and cracks filled flush and smooth with the adjoining surface.

1. Verify that stud spacing does not exceed 24" on-center.

a) Repair defects prior to installation.

2. Level wall surfaces to panel manufacturer’s requirements. Remove protrusions and fill indentations.

3.2 INSTALLATION

A. Comply with manufacturer's recommended procedures and installation sequence.

B. Cut sheets to meet supports allowing 1/8" clearance for every 8 foot of panel.

1. Cut and drill with carbide tipped saw blades or drill bits, or cut with shears.

2. Pre-drill fastener holes 1/8" oversize with high speed drill bit.

a) Space at 8" maximum on center at perimeter, 1" from panel edge.

b) Space at in field in rows 16' on center, with fasteners spaced at 12" maximum on center.

C. Apply panels to board substrate, above base, vertically oriented with seams plumb and pattern aligned with adjoining panels.

1. Install panels with manufacturer's recommended gap for panel field and corner joints.

a) Adhesive trowel and application method to conform to adhesive manufacturer’s recommendations.

b) Drive fasteners for snug fit. Do not over-tighten.

D. Apply panel moldings to all panel edges using silicone sealant providing for required clearances.

1. All moldings must provide for a minimum 1/8" of panel expansion at joints and edges, to insure proper installation.

2. Apply sealant to all moldings, channels and joints between the system and different materials to assure watertight installation.

3.3 CLEANING

A. Remove excess sealant from panels and moldings. Wipe panel down using a damp cloth and mild soap solution or cleaner.

B. Refer to manufacturer's specific cleaning recommendations Do not use abrasive cleaners.

END OF SECTION

SECTION 09900

PAINTS AND COATINGS

PART 1 - GENERAL

1.01 SECTION INCLUDES

A. Surface preparation.

B. Field application of paints. Interior and Exterior

C. See Schedule - Surfaces to be Finished, at end of Section.

1.02 REFERENCES

A. ASTM D 4442 - Standard Test Methods for Direct Moisture Content Measurement of Wood and Wood-Base Materials; 1992 (Reapproved 2003).

1.03 SUBMITTALS

A. See Section 01300 - Administrative Requirements, for submittal procedures.

B. Product Data: Provide data on all finishing products.

C. Samples: Submit two painted samples, illustrating selected colors and textures for each color and system selected with specified coats cascaded. Submit on heavy white paper stock, 8 1/2 x 11 inch in size.

D. Manufacturer's Instructions: Indicate special surface preparation procedures.

E. Maintenance Data: Submit data on cleaning, touch-up, and repair of painted and coated surfaces.

1.04 QUALITY ASSURANCE

A. Manufacturer Qualifications: Company specializing in manufacturing the Products specified in this section with minimum three years documented experience.

B. Applicator Qualifications: Company specializing in performing the work of this section with minimum five years experience.

1.05 MOCK-UP

A. See Section 01400 - Quality Requirements, for general requirements for mock-up.

B. Provide panel, 8 feet long by 8 feet wide, illustrating special coating color, texture, and finish.

C. Provide door and frame assembly illustrating paint coating color, texture, and finish.

D. Locate where directed.

E. Mock-up may remain as part of the Work.

1.06 DELIVERY, STORAGE, AND PROTECTION

A. Deliver products to site in sealed and labeled containers; inspect to verify acceptability.

B. Container Label: Include manufacturer's name, type of paint, brand name, lot number, brand code, coverage, surface preparation, drying time, cleanup requirements, color designation, and instructions for mixing and reducing.

C. Paint Materials: Store at minimum ambient temperature of 45 degrees F and a maximum of 90 degrees F, in ventilated area, and as required by manufacturer's instructions.

1.07 ENVIRONMENTAL REQUIREMENTS

A. Do not apply materials when surface and ambient temperatures are outside the temperature ranges required by the paint product manufacturer.

B. Do not apply exterior coatings during rain or snow, or when relative humidity is outside the humidity ranges required by the paint product manufacturer.

C. Minimum Application Temperatures for Latex Paints: 45 degrees F for interiors; 50 degrees F for exterior; unless required otherwise by manufacturer's instructions.

D. Provide lighting level of 80 ft candles measured mid-height at substrate surface.

1.08 EXTRA MATERIALS

A. See Section 01600 - Product Requirements, for additional provisions.

B. Supply 1 gallon of each color; store where directed.

C. Label each container with color in addition to the manufacturer's label.

PART 2 - PRODUCTS

2.01 MANUFACTURERS

A. Paints:

1. ICI Paints North America: www.icipaintsinna.com.
2. Benjamin Moore & Co: www.benjaminmoore.com.
3. Sherwin-Williams: www.sherwin-williams.com.
4. Sonneborn – Elastomeric coating for concrete wall and roof panels.

B. Primer Sealers: Same as Paints.

C. Substitutions: See Section 01600 - Product Requirements.

2.02 PAINTS AND COATINGS - GENERAL

A. General: All first line products.

B. Paints and Coatings: Ready mixed, except field-catalyzed coatings. Prepare pigments:

1. To a soft paste consistency, capable of being readily and uniformly dispersed to a homogeneous coating.
2. For good flow and brushing properties.
3. Capable of drying or curing free of streaks or sags.

2.03 PAINT SYSTEMS – INTERIOR AND EXTERIOR

A. Paint GE-OP-3L - Synthetic Plaster, Opaque, Latex, 3 Coat:

1. One coat of latex primer sealer.
2. Flat: Two coats of latex.

B. Paint MgE-OP-3A - Galvanized Metals, Alkyd, 3 Coat:

1. One coat galvanize primer.
2. Gloss: Two coats of alkyd enamel.

2.04 PAINT SYSTEMS - INTERIOR

A. Paint WI-OP-3A -Wood, Opaque, Alkyd, 3 Coat:
   3. One coat alkyd primer sealer.
   4. Semi-gloss: Two coats of alkyd enamel.
B. Paint MI-OP-2A - Ferrous Metals, Primed, Alkyd, 2 Coat:
   1. Touch-up with alkyd primer.
   2. Gloss: Two coats of alkyd enamel.
C. Paint GI-OP-3LA - Gypsum Board/Plaster, Latex-Acrylic, 3 Coat:
   1. One coat of alkyd primer sealer.
   2. Semi-gloss: Two coats of latex-acrylic enamel; locations as directions.
   3. Eggshell: Two coats of latex-acrylic enamel; locations as directed.
D. Concrete Block Units – Commercial Block Filler Primer and (2) coats.

2.05 ACCESSORY MATERIALS

A. Accessory Materials: Linseed oil, shellac, turpentine, paint thinners and other materials not specifically indicated but required to achieve the finishes specified; commercial quality.
B. Patching Material: Latex filler.
C. Fastener Head Cover Material: Latex filler.

PART 3 - EXECUTION

3.01 EXAMINATION

A. Verify that surfaces are ready to receive Work as instructed by the product manufacturer.
B. Examine surfaces scheduled to be finished prior to commencement of work. Report any condition that may potentially affect proper application.
C. Test shop-applied primer for compatibility with subsequent cover materials.
D. Measure moisture content of surfaces using an electronic moisture meter. Do not apply finishes unless moisture content of surfaces are below the following maximums:
   1. Plaster and Gypsum Wallboard: 12 percent.
   2. Interior Wood: 15 percent, measured in accordance with ASTM D 4442.

3.02 PREPARATION

A. Surface Appurtenances: Remove electrical plates, hardware, light fixture trim, escutcheons, and fittings prior to preparing surfaces or finishing.
B. Surfaces: Correct defects and clean surfaces which affect work of this section. Remove or repair existing coatings that exhibit surface defects.
C. Marks: Seal with shellac those which may bleed through surface finishes.
D. Impervious Surfaces: Remove mildew by scrubbing with solution of tetra-sodium phosphate and bleach. Rinse with clean water and allow surface to dry.

E. Gypsum Board Surfaces to be Painted: Fill minor defects with filler compound. Spot prime defects after repair.

F. Plaster Surfaces to be Painted: Fill hairline cracks, small holes, and imperfections with latex patching plaster. Make smooth and flush with adjacent surfaces. Wash and neutralize high alkali surfaces.

G. Galvanized Surfaces to be Painted: Remove surface contamination and oils and wash with solvent. Apply coat of etching primer.

H. Shop-Primed Steel Surfaces to be Finish Painted: Sand and scrape to remove loose primer and rust. Feather edges to make touch-up patches inconspicuous. Clean surfaces with solvent. Prime bare steel surfaces. Re-prime entire shop-primed item.

I. Metal Doors to be Painted: Prime metal door top and bottom edge surfaces.

J. Exterior concrete inspect and properly prepare all surfaces prior to installing elastomeric membrane system.

3.03 APPLICATION

A. Apply products in accordance with manufacturer's instructions.

B. Do not apply finishes to surfaces that are not dry. Allow applied coats to dry before next coat is applied.

C. Apply each coat to uniform appearance. Apply each coat of paint slightly darker than preceding coat unless otherwise approved.

D. Vacuum clean surfaces of loose particles. Use tack cloth to remove dust and particles just prior to applying next coat.

E. Where clear finishes are required, tint fillers to match wood. Work fillers into the grain before set. Wipe excess from surface.

3.04 FINISHING MECHANICAL AND ELECTRICAL EQUIPMENT

A. Refer to Section 15190 for schedule of color coding of equipment, duct work, and piping.

B. Remove unfinished louvers, grilles, covers, and access panels on mechanical and electrical components and paint separately.

C. Finish equipment, piping, conduit, and exposed duct work in utility areas in colors according to the color coding scheme indicated.

D. Reinstall electrical cover plates, hardware, light fixture trim, escutcheons, and fittings removed prior to finishing.

3.05 CLEANING

A. Collect waste material which may constitute a fire hazard, place in closed metal containers, and remove daily from site.

3.06 SCHEDULE - SURFACES TO BE FINISHED

A. Paint all surfaces normally included in a complete paint job, unless specifically excluded.

B. Do Not Paint or Finish the Following Items:

1. Items fully factory-finished unless specifically noted.

2. Fire rating labels, equipment serial number and capacity labels.

3. Stainless steel items.

C. Mechanical and Electrical: Use paint systems defined for the substrates to be finished.

4. Paint all insulated and exposed pipes occurring in finished areas to match background surfaces, unless otherwise indicated.
5. Paint shop-primed items occurring in finished areas.
6. Paint interior surfaces of air ducts that are visible through grilles and louvers with one coat of flat black paint to visible surfaces.
7. Paint dampers exposed behind louvers, grilles, to match face panels.

D. Paint both sides and edges of plywood backboards for electrical and telephone equipment before installing equipment.

END OF SECTION

SECTION 10140
SIGNAGE

PART 1 - GENERAL

1.01 SECTION INCLUDES

A. Raised letter plastic signs.

B. Signs made of individual metal letters.

C. Cast metal dedication plaque: Galveston County Commissioner's Court

D. Cast metal County Seal

1.02 REFERENCES

E. A. ANSI/ICC A117.1 - American National Standard for Accessible and Usable Buildings and Facilities; International Code Council; 1998.

1.03 SUBMITTALS

F. See Section 01300 - Administrative Requirements, for submittal procedures.

G. Shop Drawings: Indicate sign styles, lettering font, foreground and background colors, locations, overall dimensions of each sign.

1.04 DELIVERY, STORAGE, AND PROTECTION

A. Package signs, labeled in name groups.

B. Store adhesive attachment tape at ambient room temperatures.

1.05 ENVIRONMENTAL REQUIREMENTS

A. Do not install signs when ambient temperature is lower than recommended by manufacturer.

B. Maintain this minimum temperature during and after installation of signs.

PART 2 - PRODUCTS

2.01 RAISED LETTER SIGNS

A. Raised Character Size and Style: Acrylic plastic, character adhered to base material:

1. Comply with applicable provisions of ANSI/ICC A117.1, including Braille.
2. Character Color: Black.
3. Background Color: Selected from Manufacturer's standard colors.
4. Character Thickness: 1/8 inch.
5. Height: 5/8 inch.
6. Edges: Square.
7. Character Font: Helvetica.
8. Character Case: Upper case only.
9. Locations: Men's Restoom #109, Women's Restroom #107
10. Sign Content: Signs to include Room Name, Handicap Symbol, and Braile.

B. ACCESSORIES

1. Tape Adhesive: Double sided tape, permanent adhesive.
2. Concealed fasteners where required.

2.02 INDIVIDUAL LETTER SIGNS

A. Character Size and Style: Cut Metal Letters

1. Character Material and Color: Brushed 316 Stainless Steel.
2. Character Thickness: 1/4 inch.
3. Height: 10 inches and 8 inches.
4. Edges: Square.
5. Character Font: To be Selected to match County Annex Building.
6. Character Case: Upper case only.
7. Mounting: Stud and Spacer Mount
8. See Drawings for Sign Drawing.

2.03 Cast Metal Dedication Plaque

A. Character Size and Style: Cast Plaque

1. Character Material and Color: Aluminium.
2. Plaque Thickness: 1inch.
3. Size: 24" x 12".
4. Edges: Square.
5. Character Font: To be Selected.
6. Mounting: Exposed Fastener to match plaque finish.

2.04 Cast Metal Dedication Plaque

A. Character Size and Style: Cast County Seal

1. Character Material and Color: Cast Aluminium.
2. Plaque Thickness: 1inch.
3. Size: 32" diameter.
4. Edges: Square.
5. Mounting: Concealed Mounting per manufacturer's instructions.

PART 3 - EXECUTION

3.01 EXAMINATION

A. Verify that substrate surfaces are ready to receive work.

3.02 INSTALLATION

A. Install in accordance with manufacturer's instructions.

B. On Individual Letter signs mount letters only in mortar joint not in masonry.

END OF SECTION

SECTION 10160
METAL TOILET PARTITIONS

PART 1 - GENERAL

1.1 SUBSTITUTION

A. Refer to Section 01630 Substitutions.

1.2 SCOPE

A. Furnish all labor, materials, equipment and services necessary or incidental to completion of stainless steel toilet partitions.

1.3 SUBMITTALS

A. Shop Drawings: Within four weeks of award of contract, submit:

1. Complete shop drawings for the Architect's approval, show all required field measurements, all details and elevations plans, and sections required to indicate all conditions.
2. Manufacturer's specifications and other data needed to prove compliance with the specified requirements.
3. Manufacturer's installation instructions.
4. Samples or color charts showing manufacturer's full range of colors.

PART 2 - PRODUCTS

2.1 MATERIALS

A. All toilet partitions shall be floor mounted, overhead braced, stainless steel in the dimensions and arrangements indicated on the drawings.

B. Panels:

1. Doors and panels and seats of compartments shall be 1” thick and shall have a uniform flush front appearance.
2. Doors, wall posts, panels shall be # 304 satin finish stainless steel.
3. Pilasters shall be 1 ¼” thick.
4. Stiles shall have a leveling device and be concealed by a one piece 4 inch high, type 304 satin finish stainless steel shoe.

C. Finish: #4 Satin Brushed.

D. Hardware:

1. All door hardware, mounting brackets and support brackets shall be stainless steel.
2. Headrails and returns of overhead braced toilet compartments shall be stainless steel.
3. Hinges shall hold door of unoccupied compartment partially open.
4. Locked compartment may be opened from outside by lifting door.
5. All exposed screws to be tamperproof.

6. Mounting hardware at all panels and all stiles or walls shall be continuous channels with side flange.

2.2 MANUFACTURERS

A. Toilet Partitions:

1. Mills (Bradley) series 400 stainless steel
2. Global Steel Products
3. Flush-Metal Partition Corp.
4. Bobrick Washroom Equipment, Inc.

PART 3 - EXECUTION

3.1 INSTALLATION

A. Install in strict accordance with manufacturer's printed instructions.

B. Install all toilet partitions where indicated on the drawings, and as indicated on the shop drawings, anchoring all components firmly in place for long life under hard use, and in complete accordance with the manufacturer's recommendations.

C. Provide blocking/anchoring devices to secure to wall. Anchoring devices must be compatible to wall type, to ensure adequate strength.

3.2 CLEANING AND ADJUSTING

A. Defaced finish will not be permitted. Damaged, scratched or marred defective materials will be rejected, and shall be replaced with new materials.

B. Clean surfaces free of oil and imperfections.

C. Except for compartments for the handicapped, adjust doors to remain at a uniformly open position when unlocked.

END OF SECTION

SECTION 10261
CORNER GUARDS

PART 1 - GENERAL

1.01 SECTION INCLUDES:

A. Plastic corner guards

1.02 REFERENCES

A. ASTM D256 (2010) Determining the Izod Pendulum Impact Resistance of Plastics

B. ASTM D543 (2006) Standard Practices for Evaluating the Resistance of Plastics to Chemical Reagents

1.03 SUBMITTALS

A. Product Data

B. Samples

1. Color Selection

C. Test Reports

1.04 DELIVERY, STORAGE, AND HANDLING

A. Deliver materials to the project site in manufacturer's original unopened containers with seals unbroken and labels and trademarks intact. Keep materials dry, protected from weather and damage, and stored under cover.

B. Materials shall be stored at approximately 21 degrees C 70 degrees F for at least 48 hours prior to installation.

1.05 WARRANTY

A. Provide manufacturer's standard performance guarantees or warranties that extend beyond a 1 year period.

PART 2 PRODUCTS

2.01 CORNER GUARDS

A. Resilient Material

1. Provide resilient material consisting of high impact resistant extruded acrylic vinyl, polyvinyl chloride, or injection molded thermal plastic conforming to the following:

a) Minimum Impact Resistance - Minimum impact resistance shall be 960.8 N-m/m 18 ft-lbs/sq. inch when tested in accordance with ASTM D256, (Izod impact, ft-lbs per sq inch notched).

b) Fire Rating -Fire rating shall be Class 1 when tested in accordance with ASTM E84, having a maximum flame spread of 25 and a smoke developed rating of 450 or less. Material shall be rated self extinguishing when tested in accordance with ASTM D635. Material shall be labeled and tested by an approved nationally known testing laboratory. Resilient material used for protection on fire rated doors and frames shall be listed by the testing laboratory performing the tests. Resilient material installed on fire rated wood/steel door and frame assemblies

shall have been tested on similar type assemblies. Test results of material tested on any other combination of door/frame assembly will not be acceptable.

c) Integral Color - Colored components shall have integral color and shall be matched in accordance with SAE J1545 to within plus or minus 1.0 on the CIE-LCH scales.

d) Chemical and Stain Resistance - Materials shall be resistant to chemicals and stains reagents in accordance with ASTM D543.

e) Fungal and Bacterial Resistance - Materials shall be resistant to fungi and bacteria in accordance with ASTM G21, as applicable.

2. Resilient Corner Guards

a) Corner guard units shall be [flush mounted] [surface mounted] type, radius formed to profile shown. Corner guards shall 6 feet high. Mounting hardware, cushions, and base plates shall be furnished. Assembly shall consist of a snap-on corner guard formed from high impact resistant resilient material, mounted on a continuous aluminum retainer. Extruded aluminum retainer shall conform to ASTM B221, alloy 6063, temper T5 or T6. Flush mounted type guards shall act as a stop for adjacent wall finish material. Factory fabricated end closure caps shall be furnished for top and bottom of surface mounted corner guards. Flush mounted corner guards installed in fire rated wall shall maintain the rating of the wall. Insulating materials that are an integral part of the corner guard system shall be provided by the manufacturer.

B. TRIM, FASTENERS AND ANCHORS

1. Provide vinyl trim, fasteners and anchors for each specific installation as shown.

C. FINISH

1. Submit samples indicating color and texture of materials requiring color and finish.

2. Color shall be selected from manufacturers full range of colors.

D. ADHESIVES

1. Adhesive for resilient material shall be in accordance with manufacturers recommendations.

PART 3 EXECUTION

3.01 INSTALLATION

A. Corner Guards

1. Mount guards on external corners of interior walls, partitions and columns as [shown] [in accordance with manufacturer's recommendations].

2. Where corner guards are installed on gypsum board, clean surfaces and anchor guards with a neoprene solvent-type contact adhesive specifically manufactured for use on gypsum board construction. Remove excess adhesive from the guard edges and allow to cure undisturbed for 24 hours.

END OF SECTION

SECTION 10280
TOILET ROOM ACCESSORIES

CONDITIONS OF THE CONTRACT AND DIVISION 1, as indexed, apply to this Section.

PART 1 - GENERAL

1.1 SUBSTITUTION

Refer to Section 01630 Substitutions for substitutions.

1.2 SCOPE

A. Furnish all labor, materials, equipment and services necessary or incidental to completion of toilet room accessories listed below in the item list.:

1.3 SUBMITTALS

A. Comply with Section 01300.
B. Shop Drawings: Indicate size, material and finish. Show locations, installation procedures. Include details of joints, attachments, fasteners, clearances, and mounting heights and compliance with ADA.
C. Product Data: Submit manufacturer's technical data and installation instructions. Rough in for most accessories is complete, therefore any substitutions of Bobrick must be the exact same size for rough-in.
D. Operation and Maintenance Instructions: Provide printed or written instructions for operation and maintenance of units specified.

1.4 MINIMUM COMPLIANCE STANDARDS

Comply with ANSI A117.1

PART 2 – PRODUCTS

2.1 MATERIALS

A. Stainless Steel:
  01 Alloy: AISI, Type 302 or 304 (18-08) ASTM A167
  02 Finish: No. 4 satin, unless otherwise specified
  03 Thickness: US Stainless 22 gauge minimum
B. Aluminum:
  01 Extruded: 6463-T5 alloy, anodized
  02 Cast: 356 or 356-T6 alloy
C. Chromium Plating:
  01 Method: Over nickel
  02 Standard: ASTM C456, Type SC 2
D. Brass:
  01 Cast or forged
  02 QQ-B-626C
E. Mirrors: (Framed)
  01 Standard: FS DD-G-451-C, silvering quality No. 1 float or plate
  02 Thickness: 1/4 inch
  03 Backing: Electrolytic cooper
  04 Protection: Padding and filler strips

2.2 MANUFACTURERS
- A. A & J Washroom Accessories
- B. Bobrick Dispensers, Inc.
- C. Bradley Washfountain Co.
- D. Charles Parker Co.
- E. Watrous, Inc.
- F. GAMCO, General Accessory Mfg. Co.
- G. American Specialties

2.3 QUALITY STANDARDS
- A. Design, finish and keying of items shall be the same.
- B. Furnish items from one manufacturer only, unless otherwise specified or directed by Architect.

PART 3 - EXECUTION

3.1 MOUNTING LOCATIONS
- A. Refer to drawings for mounting locations. When not shown, submit supplier's recommendations for locations and mounting height before proceeding.
- B. Contractor shall be responsible for supplying all opening, blocking, and other components necessary for installation of all toilet accessories.
- C. Use approved theft-resistant type fasteners.
- D. Comply with ADA requirements.

PART 4 - SCHEDULES

4.1 As a standard, model numbers shown are American Specialties, Inc. Other manufacturers are approved but must provide equivalent products to those listed.

GB36	Grab Bar - 1 1/4" diameter concealed mounting model 3100 - Type 1 - 36" wide
GB42	Grab Bar - 1 1/4" diameter concealed mounting model 3100 - Type 1 - 42" wide
MR1	Frameless Mirror 60"L x 40"H - 8287
MR2	Frameless Mirror 48"L x 40"H - 8287
PTD	Recessed Paper Towel Dispenser and Waste Receptacle model 20469
SD	Wall Mounted Soap Dispenser model 20363
TPH	Surface Mounted model 20030

END OF SECTION

SECTION 10510
PHENOLIC LOCKERS

PART 1 - GENERAL

1.01 SUMMARY

A. Section includes:

1. Solid phenolic lockers

1.02 SUBMITTALS

A. Submittals:Comply with procedures and quantities as indicated in Division 1 Submittal Procedure Section.

B. Shop Drawings:Submit shop drawings indicating room sizes, layout, locker dimensions, material thickness, trim, hardware, finishes, locks, base, doors, accessories, and installation details.

C. Product Data:Submit manufacturer's technical data for materials, fabrication, finishing, fastenings, hardware, and installation details.

D. Samples:Submit samples of edge details, colors, patterns, finishes, and textures.

E. Closeout Documents:Submit the following:

1. Operation and maintenance data
2. Warranty

1.03 QUALITY ASSURANCE

A. Qualifications:

1. Fabricator shall be capable of providing field service representation.
2. Installer shall be approved by the manufacturer and be experienced in performingwork of similar size and scope.

B. Pre-installation Meeting:Conduct pre-installation meeting prior to installation to verify project requirements and conditions.

1.04 Delivery, Storage and Handling

A. Ordering: Comply with supplier's ordering and lead-time guidelines to avoid delays.

B. Delivery: Deliver materials in the manufacturer's original protective packaging.

C. Storage and Handling: Store materials in an enclosed shelter providing protection from damage, temperature, humidity, and exposure to the elements.

1.05 Coordination and Project Conditions

A. Field Measurements: Before material fabrication, verify actual field measurements and show actual measurements on shop drawings.

B. Coordination: Coordinate field measurements with fabrication schedule andconstruction progress to avoid construction delays.

1.06 Warranty

A. Submit executed copy of the 20-year warranty against defects in material signed by an authorized representative.

PART 2 – PRODUCTS

2.01 Solid Phenolic Lockers

A. Basis of Design: Drawings and specifications are based on Summit Phenolic Lockers.

B. Manufacturer and Fabricators:

1. Summit Lockers Inc.
   149 McLeod Road
   Columbia SC 29203
   Phone: 888-310-7149
   Fax: 877-828-2124
   Email: info@summitlockers.com

2. ACCU TEC MFG, INC.
   1027 South Linwood
   Santa Ana, Ca. 92705
   Phone: 714- 549-2015
   Fax: 714-549-2087

3. COLUMBIA LOCKERS® a Division of PSiSC®
   P.O. Box 181,
   Columbia, S.C. 29202,
   Phone: 866-337-7286,
   Fax: 866-337-7291

C. Model:

1. Summit Phenolic Locker fabricated from solid phenolic composite material.
2. ACCU TEC Phenolic vented lockers
3. Columbia Class A Fire Rated Solid Phenolic Lockers shall be Series 6811L

2.02 Materials

A. Panel Material:

1. Decorative papers impregnated with a melamine resin on faces with a clear protective overcoat and integrally compression molded within a core consisting ofsolid phenolic impregnated kraft papers.

2. Fire Rating:

   a) Core or panel material shall meet fire Class B resistance per ASTM E84

B. Doors & Ancillary Panels:

1. Material: 1/2” (13mm) thick solid phenolic composite material.

2. Corners: Eased edges

3. Door Fastening: Blind fastening unless through bolts are requested

4. Colors: Doors are available in a full range of manufacturer colors, patterns andwood grains. All phenolic panel edges are black.

C. Locker Bodies

1. Exposed edges: Straight profile; eased edges to remove sharpness; machine polished and free from tooling imperfections.

2. Tops, bottoms, and intermediate shelves: 3/8” (9.5mm) thick solid phenolic composite material with ventilation holes.
3. Locker sides: 5/16” (8mm) thick solid phenolic composite material.
4. Locker backs: 1/4”+ (6mm) thick solid phenolic composite material.

D. Colors: Locker bodies are white. All phenolic panel edges are black.

E. Hardware

1. Hinges: Include two (2)barrel hinges on doors 36” tall or less. Include three (3) barrel hinges for doors > 36”tall.
   a) 180° Stainless Steel continuous hinge
2. Interior Side hooks:
   a) Material: Stainless steel. Plastic and nylon hooks are not acceptable.
   b) Two per opening for all openings 30” tall or greater.
3. Fasteners: All fasteners shall be stainless steel.
4. Door Identification Plates:
   a) Material: Black plastic with reverse engraved numbers and surface mounted with permanent adhesive.
   b) Fonts to be a minimum 1/2” high and up to four characters.
   c) Numbering sequence to be included in shop drawings.
5. Door Locks: (choose one; hasp bar for padlock is standard)
   a) Stainless steel hasp bar for customer supplied padlock

F. Ventilation

1. Vertical ventilation: Provide six 5/16” (8mm) diameter ventilation holes on tops, bottoms, and intermediate shelves. Provide three 5/16” (8mm) diameter ventilation holes on “Z” type intermediary shelves.
2. Horizontal ventilation: Provide ventilation around the edge of the door equal to at least 1.43 square inches of ventilation surface area per linear foot of door perimeter.

2.03 Accessories and Options

A. Finished Locker Top:

1. Flat top: ½’’ solid phenolic top color matched with lockers and installed flat.

B. Adjustable Locker Base: Adjustable locker feet with ½” solid phenolic kick plate color matched with lockers. Adjustable from 3 3/4” to 5”.

C. Additional Door Ventilation:

1. 100% additional ventilation. Through door ventilation with 5/16” holes drilled into ahorizontal or vertical pattern.

PART 3 – EXECUTION

3.01 Examination: Examine site conditions before locker installation. Notify architect of unacceptable areas. Do not install lockers until unacceptable conditions have been corrected.

3.02 Installation

A. Install lockers in locations as shown on shop drawings per manufacturer's instructions.

B. Install lockers installed secured, plumb, level, square, and flush. Base by others must beflat and level.

C. Install all required trim, fillers, end panels, and closures per manufacturer's instructions.

D. Use hardware supplied or recommended by the manufacturer.

E. Attach number plates to doors as indicated on shop drawings.

F. Correct and/or replace damaged components as directed by architect.

3.03 Adjustment

A. Adjust doors and locks for smooth operation without binding.

B. Lubricate door hinges and locks per manufacturer's instructions.

3.04 Cleaning

A. Clean all surfaces in accordance with manufacturer's instructions.

B. Do not use abrasive cleaners.

END OF SECTION

SECTION 10544

FIRE PROTECTION SPECIALITIES

PART 1 - GENERAL

1.01 SECTION INCLUDES

A. Fire extinguishers.

B. Fire extinguisher cabinets.

C. Accessories.

1.02 REFERENCES

A. UL (FPED) - Fire Protection Equipment Directory; Underwriters Laboratories Inc.; current edition.

1.03 PERFORMANCE REQUIREMENTS

A. Provide extinguishers classified and labeled by Underwriters Laboratories Inc. for the purpose specified and indicated.

1.04 SUBMITTALS

A. See Section 01300 - Administrative Requirements, for submittal procedures.

B. Shop Drawings: Indicate cabinet physical dimensions.

C. Product Data: Provide extinguisher operational features.

D. Maintenance Data: Include test, refill or recharge schedules and re-certification requirements.

1.05 ENVIRONMENTAL REQUIREMENTS

A. Do not install extinguishers when ambient temperature may cause freezing of extinguisher ingredients.

PART 2 - PRODUCTS

2.01 MANUFACTURERS

A. Fire Extinguishers, Cabinets and Accessories:

1. JL Industries, Inc: www.jlindustries.com.

2. Larsen's Manufacturing Co: www.larsensmfg.com.

3. Potter-Roemer: www.potterroemer.com.

4. Substitutions: See Section 01600 - Product Requirements.

2.02 FIRE EXTINGUISHERS

A. Dry Chemical Type: Cast steel tank, with pressure gage.

1. Size and classification as scheduled.

2. Finish: Baked enamel, red color.

2.03 FIRE EXTINGUISHER CABINETS

A. Metal: Stainless Steel.

B. Cabinet Configuration: Semi-recessed type.

1. Sized to accommodate accessories.
2. Trim: Returned to wall surface, with 3 1/2 inch projection, 1 3/4 inch wide face.
3. Edges: Rolled.
4. Form cabinet enclosure with right angle inside corners and seams. Form perimeter trim and door stiles.
5. Complies with ADA

C. Door: 5/8 inch thick, reinforced for flatness and rigidity; latch. Hinge doors for 180 degree opening with continuous piano hinge. Provide nylon catch.

D. Door Glazing: Glass, clear, 1/8 inch thick tempered; narrow, full height of door, offset to pull side. Set in resilient channel gasket glazing.

E. Cabinet Mounting Hardware: Appropriate to cabinet. Pre-drill for anchors.

F. Weld, fill, and grind components smooth.

G. Finish of Cabinet Exterior Trim and Door: Stainless Steel.

H. Finish of Cabinet Interior: Stainless Steel.

2.04 ACCESSORIES

A. Extinguisher Brackets: Formed steel, galvanized and enamel finished.

B. Cabinet Signage: 1" high red vinyl letters, applied vertically; "FIRE EXTINGUISHER".

PART 3 - EXECUTION

3.01 EXAMINATION

A. Verify existing conditions before starting work.

B. Verify rough openings for cabinet are correctly sized and located.

3.02 INSTALLATION

A. Install in accordance with manufacturer's instructions.

B. Install cabinets plumb and level in wall openings, 48 inches from finished floor to top of extinguisher inside cabinet.

C. Secure rigidly in place.

D. Place extinguishers in cabinets.

3.03 SCHEDULES

A. Refer to drawings for scheduled locations.

1. FEC: Fire Extinguisher Cabinet with extinguisher.
2. FE: Fire Extinguisher only

B. Extinguishers: 3A-40B:C, 6 lb. capacity, typical all FEC and FE locations, and (1) Class K wet chemical extinguisher tagged-rechargeable UL Rating 1A:K

C. Brackets: Provide optional steel bracket that supports bottom of extinguisher and has two restraining cables or springs at all FE locations.

END OF SECTION

SECTION 12310

Manufactured Metal Shelving

PART 1 - GENERAL

1.01 DESCRIPTION

A. This section specifies metal shelving units.

1.02 QUALITY ASSURANCE

B. Installer has technical qualifications, experience, trained personnel, and facilities to install specified items.

1.03 SUBMITTALS

A. Submit in accordance with Section 01300, Submittals.

B. Manufacturer's Literature and Data:

1. Brochures showing name and address of manufacturer, and catalog or model number of each item incorporated into the work.
2. Manufacturer's illustration and detailed description.
3. List of deviations from contract specifications.

PART 2 - PRODUCTS

2.01 Metal Shelving Unit:

A. Metro MetroMax i™ Storage System.

B. Or Approved Equal.

2.02 MANUFACTURED PRODUCTS

A. When two or more units are required, use products of one manufacturer.

B. Manufacturer of equipment assemblies, which include components made by other, shall assume complete responsibility for the final assembled unit.

C. Constituent parts which are alike, use products of a single manufacturer.

2.03 Materials

A. Frame:

1. Shelf frames and posts: Steel with electroplated substrate and highly durable, abrasion-resistant epoxy finish. epoxy finish has built-in Microban antimicrobial product protection. the adjustable foot is reinforced nylon.

B. Shelves:

1. Removable polymer shelf mats with epoxy coated frames and posts.
2. Shelving units hold, up to 800 lbs. (363 kg) per shelf and 2000 lbs. per stationary unit
3. Shelf Mats: injection molded polypropylene with exclusive built-in Microban® antimicrobial product protection.
4. Shelf Wedge Connector: reinforced nylon.

2.04 ACCESSORIES

A. Wall Anchoring:

1. Provide Wall anchoring to resist a lateral force of 200 lbs.

B. Joining Hardware:

2. Provide two Post Clamps per post for where two units join.

2.05 Product Schedule

A. SHV-01:

3. 18" deep x 4' long by 63" high. Have 7 shelves, have adjustable stainless steel foot plates.

B. SHV-02:

4. 18" deep x 5' long by 63" high. Have 7 shelves, have adjustable stainless steel foot plates.

PART 3 - EXECUTION

3.01 COORDINATION

A. Before installing casework, verify wall and floor surfaces covered by casework have been finished.

B. Verify location and size of mechanical and electrical services as required.

C. Verify reinforcement of walls and partitions for support and anchorage of casework.

3.02 FASTENINGS AND ANCHORAGE

A. Use 6 mm (1/4 inch) diameter toggle or expansion bolts, or other appropriate size and type fastening device for securing casework to walls. Use expansion bolts shields having holding power beyond tensile and shear strength of bolt and breaking strength of bolt head.

3.03 PROTECTION TO FIXTURES, MATERIALS, AND EQUIPMENT

A. Tightly cover and protect cabinets against dirt, water chemical or mechanical injury.

B. Thoroughly clean interior and exterior of cabinets, at completion of all work.

END OF SECTION

COUNTY APPROVAL:
SIGNATURE _____ DATE_____

GALVESTON COUNTY BEACH PAVILION

CIVIL DRAWINGS

C0.01	GENERAL NOTES
C0.02	GENERAL NOTES
C1.01	SITE PLAN
C1.02	WATER & SANITARY PLAN
C1.03	PAVING & DRAINAGE PLAN
C2.01	WATER DETAILS
C2.02	SANITARY
C2.03	PAVING DETAILS

ARCHITECTURAL DRAWINGS

A0.1	SITE PLAN
A1.1	LOWER LEVEL PLAN
A1.2	UPPER LEVEL PLAN
A1.3	ROOF PLAN
A2.1	EXTERIOR ELEVATIONS
A2.2	EXTERIOR ELEVATIONS
A3.1	BUILDING SECTIONS
A3.2	BUILDING SECTIONS
A3.3	WALL SECTIONS
A9.1	REFLECTED CEILING PLAN

STRUCTURAL DRAWINGS

S0.01	GENERAL NOTES
S0.02	GENERAL NOTES
S1.01	FOUNDATION PLAN
S1.02	ENLARGED RAMP-STAIR FOUNDATION PLAN
S2.01	ROOF FRAMING PLAN
S3.01	FOUNDATION DETAILS

MECHANICAL DRAWINGS

M1.0	MAIN LEVEL MECHANICAL PLAN
M2.0	LEGEND AND NOTES
M3.0	MECHANICAL SPECIFICATIONS
M4.0	MECHANICAL DETAILS

PLUMBING DRAWINGS

P1.0	LOWER LEVEL SEWER PLAN
P.1.1	MAIN LEVEL SEWER PLAN
P1.2	LOWER LEVEL HOT & COLD WATER PLAN
P1.2	MAIN LEVEL HOT & COLD WATER PLAN
P2.0	PLUMBING FIXTURE SPECIFICATION
P2.1	PLUMBING FIXTURE SPECIFICATION
P2.2	SEWER AND WATER DIAGRAMS
P2.3	PLUMBING SPECIFICATION SHEETS
P3.0	PLUMBING LEGEND , NOTES, & REQUIREMENTS
P4.0	PLUMBING SPECIFICATIONS
P5.0	PLUMBING DETAILS

ELECTRICAL DRAWINGS

E1.0	LOWER LEVEL POWER & LIGHTING PLAN
E1,1	MAIN LEVEL POWER PLAN
E1.2	MAIN LEVEL LIGHTING PLAN
E2.0	PANEL SCHEDULE & LOAD SUMMARY
E3.0	ELECTRICAL SPECIFICATIONS
E3.1	ELECTRICAL SPECIFICATIONS

GALVESTON COUNTY
BEACH PAVILION
CRYSTAL BEACH, TX 77650

BE–Arc LLC Project No : C–17–003.01

BRAX EASTERWOOD DESIGN
architecture + planning

BRAX EASTERWOOD
DESIGN
2728 AVENUE Q SUITE 2
GALVESTON TEXAS 77550
PHONE 409–354–8976
EASTERWOOD@BEAIA.COM

INTERIM REVIEW

ARCHITECT # 19694

SEAL

DATE	REVISION

DESIGN DEVELOPMENT

DATE ISSUED:
9/29/2017

COPYRIGHT 2017

GENERAL NOTES:

1. REFERENCE LINES AND GRADES

   A. THE OWNER SHALL PROVIDE REFERENCES FOR LINE AND GRADE. IT SHALL BE THE CONTRACTOR'S RESPONSIBILITY TO MAINTAIN THE REFERENCE POINTS AND REPLACE THEM IF LOST OR DAMAGED.

2. EXISTING UTILITIES

   A. VERIFY LOCATION AND ELEVATION OF EXISTING FACILITIES PRIOR TO CONSTRUCTION OF PROPOSED FACILITIES.
   B. PROTECT ALL EXISTING UTILITIES DURING CONSTRUCTION.
   C. THE TYPE, SIZE, LOCATION AND OWNERSHIP OF EXISTING UTILITIES HAVE BEEN OBTAINED FROM RECORD DRAWINGS FURNISHED BY THE OWNER. INFORMATION DERIVED FROM THESE SOURCES IS BELIEVED TO BE THE MOST RELIABLE AVAILABLE AND IS PROVIDED FOR THE CONTRACTOR'S INFORMATION ONLY. THE CONTRACTOR SHALL NOTIFY EACH PIPELINE OWNER AND VERIFY ITS ACTUAL FIELD LOCATION PRIOR TO EXCAVATION. NO WARRANTY IS GIVEN AS TO THE ACCURACY OR COMPLETENESS OF UTILITY LOCATION SHOWN ON THESE DRAWINGS.
   D. AT LEAST 30 DAYS PRIOR TO COMMENCING ANY EXCAVATING OR OTHER CONSTRUCTION ACTIVITY IN THE VICINITY OF THE UTILITY, NOTIFY THE TEXAS EXCAVATION SAFETY SYSTEM AT 1-800-DIG-TESS (344-8377).
   E. NO EXCAVATING OR OTHER CONSTRUCTION ACTIVITY SHALL BE CONDUCTED IN THE IMMEDIATE VICINITY OF A PIPELINE IN THE ABSENCE OF A PIPELINE REPRESENTATIVE. THE CONTRACTOR SHALL DETERMINE THE EXACT LOCATION BEFORE COMMENCING WORK, AND SHALL BE RESPONSIBLE FOR ANY DAMAGES CAUSED BY HIS FAILURE TO EXACTLY LOCATE AND PRESERVE THESE UNDERGROUND FACILITIES.
   F. OVERHEAD LINES MAY EXIST ON THE PROPERTY. THEY HAVE NOT BEEN MARKED SINCE THEY ARE CLEARLY VISIBLE. THE CONTRACTOR SHALL LOCATE THEM PRIOR TO BEGINNING ANY CONSTRUCTION. TEXAS LAW, SECTION 752, HEALTH AND SAFETY CODE, FORBIDS ALL ACTIVITIES IN WHICH PERSONS OR THINGS MAY COME WITHIN 6 FEET OF LIVE OVERHEAD HIGH VOLTAGE LINES. CONTRACTORS AND OWNERS ARE LEGALLY RESPONSIBLE FOR THE SAFETY OF CONSTRUCTION WORKERS UNDER THIS LAW. THIS LAW CARRIES BOTH CRIMINAL AND CIVIL LIABILITY.

3. EXISTING CONDITIONS:

   A. SPECIAL CARE SHALL BE TAKEN TO NOT DISTURB THE DRAINAGE.
   B. EXCESS EXCAVATED MATERIAL SHALL BE DISPOSED OF AS DIRECTED BY THE OWNER OR AS SPECIFIED ON THE DRAWINGS. SOIL SHALL NOT BE DEPOSITED GREATER THAN 4" DEEP WITHOUT PERMISSION FROM THE OWNER.

4. PERMITS:

   A. OWNER TO OBTAIN ALL PERMITS REQUIRED BY CITY, COUNTY, AND STATE AGENCIES PRIOR TO STARTING CONSTRUCTION OF UTILITY AND/OR CULVERTS WITHIN ROAD RIGHT-OF-WAYS.
   B. CONTRACTOR SHALL ASSURE HIMSELF THAT ALL CONSTRUCTION PERMITS HAVE BEEN OBTAINED PRIOR TO COMMENCEMENT OF WORK. REQUIRED PERMITS THAT CAN ONLY BE ISSUED TO CONTRACTOR SHALL BE OBTAINED AT HIS EXPENSE.

5. SAFETY:

   A. OBSERVE ALL FEDERAL, STATE, AND LOCAL SAFETY REGULATIONS WHEN WORKING IN OR NEAR PUBLIC ROAD RIGHT-OF-WAYS.
   B. CONTRACTOR SHALL COMPLY WITH OSHA REGULATIONS AND STATE OF TEXAS LAWS CONCERNING EXCAVATION, TRENCHING, AND SHORING.

HURRICANE PREPAREDNESS PLAN:

1. HURRICANE CONDITIONS OF READINESS:

   A. THE TEXAS COAST IS SUBJECT TO HURRICANE STORMS AT VARIOUS TIMES DURING THE YEAR. THE CONTRACTOR SHALL COMPLY WITH THE FOLLOWING REQUIREMENTS FOR HURRICANE READINESS UNLESS SPECIFICALLY DIRECTED OTHERWISE:
   B. THE CONTRACTORS SUPERINTENDENT SHALL ATTEND A BRIEFING ON THE ESTABLISHMENT OF STORM CONDITIONS AT THE BASE.
   C. DUE TO THE POTENTIAL DAMAGES THAT WOULD RESULT TO THE PROJECT SITE AND ADJACENT STRUCTURES FROM A HURRICANE OR STORM DRIVEN BARGE OR SIMILAR LARGE FLOATING PLANT, SUCH EQUIPMENT SHALL BE REMOVED FROM THE PROJECT SITE WITHIN 24 HOURS OF THE SETTING OF STORM CONDITION THREE.

2. <u>CONDITION FOUR</u>: (SUSTAINED WIND OF 50 KNOTS OR GREATER EXPECTED WITHIN 72 HOURS)

   A. NORMAL DAILY JOB SITE CLEANUP AND GOOD HOUSEKEEPING PRACTICES. COLLECT AND STORE IN PILES OR CONTAINERS ALL SCRAP LUMBER, WASTE MATERIAL, AND RUBBISH FOR REMOVAL AND DISPOSAL AT THE CLOSE OF EACH WORKDAY.
   B. MAINTAIN THE CONSTRUCTION SITE AT THE CLOSE OF EACH WORKDAY.
   C. MAINTAIN THE CONSTRUCTION SITE INCLUDING STORAGE AREA, FREE OF ACCUMULATION OF DEBRIS.
   D. STACK FORM LUMBER IN NEAT PIES LESS THAN FOUR (4) FEET HIGH. REMOVE ALL DEBRIS, TRASH, OR OBJECTS THAT COULD BECOME MISSILE HAZARDS.
   E. CONTACT SHELMARK FOR CONDITION OF READINESS UPDATES AND COMPLETION OF REQUIRED ACTION.

3. <u>CONDITION THREE</u>; (SUSTAINED WINDS OF 50 KNOTS OR GREATER EXPECTED WITHIN 48 HOURS)

   A. MAINTAIN "CONDITION FOUR" REQUIREMENTS AND COMMENCE SECURING OPERATIONS AS NECESSARY FOR "CONDITION ONE" WHICH CANNOT BE COMPLETED WITHIN 18 HOURS.
   B. CEASE ALL ROUTINE ACTIVITIES THAT MIGHT INTERFERE WITH SECURING OPERATIONS.
   C. COMMENCE SECURING AND STOW ALL GEAR AND PORTABLE EQUIPMENT.
   D. MAKE PREPARATIONS FOR SECURING BUILDINGS.
   E. REVIEW REQUIREMENT PERTAINING TO "CONDITION TWO" AND CONTINUE ACTION AS NECESSARY TO ATTAIN "CONDITION THREE" READINESS.
   F. CONTACT SHELMARK FOR WEATHER AND CONDITION OF READINESS UPDATES AND COMPLETION OF REQUIRED ACTIONS.
   G. FOR WATERFRONT CONSTRUCTION PROJECTS, REMOVE ALL FLOATING EQUIPMENT AND BOATS FROM PROJECT SITE.

4. <u>CONDITION TWO</u>: (SUSTAINED WINDS OF 50 KNOTS OR GREATER EXPECTED WITHIN 24 HOURS)

   A. CURTAIL OR CEASE ROUTINE ACTIVITIES UNTIL SECURING OPERATIONS IS COMPLETE.
   B. REINFORCE OR REMOVE FRAMEWORK AND SCAFFOLDING.
   C. SECURE MACHINERY, TOOLS, EQUIPMENT, MATERIALS, OR REMOVE FROM THE JOB SITE.
   D. EXPEND EVERY EFFORT TO CLEAR ALL MISSILE HAZARDS AND LOOSE EQUIPMENT FROM PROJECT SITE.
   E. SECURE THE JOB SITE AND LEAVE PREMISES.

5. <u>CONDITION ONE</u>: (SUSTAINED WINDS OF 50 KNOTS OR GREATER EXPECTED WITHIN 12 HOURS)

   A. SAME AS REQUIREMENTS PERTAINING TO "CONDITION TWO".

DEFERRED SUBMITTALS:

1. DEFERRED SUBMITTALS IN ACCORDANCE WITH IBC 107.3.4.2 AND SHALL FIRST BE SUBMITTED TO THE PROJECT ARCHITECT AND/OR ENGINEER OF RECORD FOR REVIEW AND COORDINATION. FOLLOWING THE COMPLETION OF THE REVIEW AND COORDINATION BY THE ARCHITECT/ENGINEER OF RECORD; A SUBMITTAL MAY THEN BE MADE TO THE CITY BUILDING DEPARTMENT FOR REVIEW AND APPROVAL, WHICH SHALL INCLUDE A LETTER STATING THIS REVIEW AND COORDINATION HAS BEEN PERFORMED AND COMPLETED, AND PLANS AND CALCULATIONS FOR THE DEFERRED ITEMS ARE FOUND TO BE ACCEPTABLE WITH NO EXCEPTIONS.

2. THE LIST SHOULD CONTAIN BUT NOT NECESSARILY BE LIMITED TO THE FOLLOWING ITEMS:

   A. N/A

PAVING NOTES:

1. ALL MIXING, TRANSPORTATION, PLACING, AND CURING OF CONCRETE SHALL COMPLY WITH ACI 318-89.
2. REINFORCED CONCRETE PAVING SHALL CONSIST OF 6-INCH THICK CONCRETE SLAB WITH NO. 4 REBAR @18" C.C. EACH WAY. SUPPORT SLAB REINFORCEMENT WITH PLASTIC CHAIRS AT 24" O.C.E.W. MAXIMUM OR CONCRETE BRICKS AT 3'-0" O.C.E.W. MAXIMUM. ADDITIONAL CHAI/SUPPORTS MAY BE REQUIRED AT DISCRETION OF ENGINEER.
3. SUBGRADE SHALL BE COMPACTED TO AT LEAST 95% OF THE STANDARD PROCTOR MAXIMUM DRY DENSITY (ASTM D698) WITH IN -1 TO +3% OF OPTIMUM MOISTURE CONTENT.
4. MINIMUM REINFORCEMENT LAP LENGTHS = 24 INCHES FOR (#4 REBAR).
5. CONCRETE SHALL HAVE 28-DAY STRENGTH OF 3,000 PSI MINIMUM WITH A 4-INCH TO 5-INCH SLUMP.
6. REINFORCEMENT: ASTM A615 GRADE 60 KSI MINIMUM.
7. EXPANSION JOINTS (EJ) SHALL BE PROVIDED EVERY 40 FEET MAXIMUM.
8. CONTROL JOINT (CJ) WITH METAL KEYWAY SHALL BE PROVIDED ON CENTERLINE OF ROAD (LONGITUDINALLY).
9. CONTROL JOINTS (CJ) WITH TOOLED JOINT OR METAL KEYWAY SHALL BE PROVIDED AT 20 FEET MAXIMUM SPACING ON CENTER (TRANSVERSLEY).
10. IF ALL THE SPLICES OCCUR AT THE SAME LONGITUDINAL LOCATION, TRANSVERSE CRACKS THAT OCCUR AT THE LOCATION COULD CAUSE STEEL BONDING FAILURE, RESULTING IN WIDE CRACKS AND PERFORMANCE PROBLEMS. TO MAKE SURE THAT ALL THE SPLICES DO NOT OCCUR AT THE SAME TRANSVERSE LOCATION, STAGGER SPLICES TO AVOID HAVING MORE THAN 1/3 OF THE SPLICES WITHIN A 2-FT. LONGITUDINAL LENGTH OF EACH LANE OF THE PAVEMENT. SEE PAVING DETAILS.

COUNTY APPROVAL:
SIGNATURE _____ DATE_____

GALVESTON COUNTY
BEACH PAVILION
CRYSTAL BEACH, TX 77650

BE-Arc LLC Project No : C-13-007.01

SHELMARK ENGINEERING, L.L.C.
CIVIL | MARINE | PLANNING | STRUCTURAL
501 FM 517 ROAD EAST | DICKINSON, TEXAS 77539
TE FIRM NO. F-2113

INTERIM SUBMITTAL
DOCUMENT INTENDED FOR REVIEW ONLY. NOT ISSUED FOR CONSTRUCTION.

ENGINEER:
MARCUS J. MICHNA P.E.
REGISTRATION NO. 84739

DATE: 09/29/2017

DATE	REVISION

DESIGN DEVELOPMENT

DATE ISSUED:
9/29/2017

COPYRIGHT 2017
Project No: 17-217

C0.01

GENERAL NOTES

WATER DISTRIBUTION LINE CONSTRUCTION:

1. PIPE: PVC AWWA C-900 CLASS A, MINIMUM 150 PSI.

2. BENDS AND FITTINGS: ANSI A21.10, DUCTILE IRON; ANSI A21.11 FULL BODIED; NO COMPACT; MECHANICAL JOINT TYPE; MINIMUM 250 PSIG PRESSURE RATING. ALL MECHANICAL JOINTS (MJ) SHALL BE BOLTED WITH RESTRAINER.

3. GASKETS: ELASTOMERIC GASKETS AND SEALS CONFORMING TO ASTM F-477.

4. JOINT RESTRAINTS ARE REQUIRED FOR ALL BENDS

   A. CONCRETE THRUST BLOCKS (2,000 PSI MINIMUM): PROVIDED PER DETAILS.
   B. FOR PVC-DI CONNECTIONS USE EBAA MEGALUG SERIES 2000 AND UNI-FLANGE SERIES 1500 RESTRAINT DEVICES.

5. GATE VALVES WITH BOXES:

   A. ALL GATE VALVES SHALL BE RESILIENT-SEATED GATE VALVES IN ACCORDANCE WITH ANSI/AWWA C509-97/ ACCEPTED PRODUCT IS MUELLER A-2360-20 OR APPROVED EQUAL.
   B. VALVE BOXES: PROVIDE TYPE "A", CAST-IRON, SLIDE-TYPE, VALVE BOXES AS MANUFACTURED BY BASS AND HAYS FOUNDRY, INC. OR APPROVED EQUAL WITH "W" CAST INTO LID. COAT BOXES, BASES AND LIDS BY DIPPING IN HOT BITUMINOUS VARNISH. PROVIDE 6-INCH PVC, CLASS 150, DR 18, RISER PIPES.
   C. TAPPING SLEEVES AND VALVE ASSEMBLIES: FOR C-900 PIPE: MUELLER H-615 OR APPROVED EQUAL. FOR AC PIPE MUELLER H-619 OR APPROVED EQUAL.

6. FIRE HYDRANTS ASSEMBLIES:

   A. FIRE HYDRANT ASSEMBLIES SHALL CONSIST OF THE FOLLOWING COMPONENTS: FIRE HYDRANT, 6" MECHANICAL JOINTS BY EBAA OR EQUAL, SPOOL PIECES, 6" GATE VALVE, AND TEE AS SPECIFIED PER THESE DRAWINGS HEREIN.
   B. FIRE HYDRANTS SHALL BE FURNISHED AND INSTALLED IN ACCORDANCE WITH THE REQUIREMENTS OF AWWA C502 STANDARDS FOR DRY BARREL FIRE HYDRANTS. ACCEPTABLE PRODUCT IS MUELLER SUPER CENTURION 200 A-423.
   C. GATES VALVES AND TEE FITTINGS SHALL BE MECHANICAL JOINT (MJ) AND BOLTED TOGETHER OR MEGALUG FOR PVC-DI CONNECTIONS.

7. PIPE INSTALLATION (BY OPEN CUT)

   A. INSTALL PIPE AND JOINTS IN ACCORDANCE WITH ANSI/AWWA C-600-87 AND MANUFACTURER'S INSTRUCTIONS TO LINE AND GRADE SHOWN ON DRAWINGS.
   B. EXCAVATE TO REQUIRED DEPTH AND WIDTH AND INSTALL TO LINE AND GRADE AS SHOWN ON THE DRAWINGS.
   C. IF SANDY SOIL CONDITIONS ARE ENCOUNTERED, AT 500' INTERVALS PROVIDE 3' WIDE GROUNDWATER BARRIER CONSISTING OF A LOW PERMEABILITY MATERIAL TO IMPEDE PASSAGE OF WATER THROUGH THE BEDDING AND EMBEDMENT. MATERIAL SHALL MEET A SOIL CLASSIFICATION GC, SC, CI OR ML-CL, AND SHALL BE COMPACTED TO 95% OF MAXIMUM DENSITY. MATERIAL MAY BE FINELY DIVIDED SUITABLE JOB EXCAVATED MATERIAL, FREE FROM STONES, ORGANIC MATERIAL, AND DEBRIS.
   D. ALL PLUGGED LINES FOR FUTURE EXTENSIONS SHALL BE 5-FEET IN LENGTH WITH RESTRAINED JOINT DEVICES UNLESS NOTED OTHERWISE (U.N.O.) ON DRAWINGS.

8. PIPE INSTALLATION (OTHER THAN OPEN CUT)

   A. ALL JOINTS FOR PIPE IN THE HOLE SHALL BE MADE UP PRIOR TO THE PIPE ENTERING THE BORE.
   B. BORED HOLE FOR ROAD CROSSING SHALL UTILIZE WATER ONLY FOR LUBRICATION. USE 2-INCH PILOT HOLE FOR ALIGNMENT AND GRADE. FOLLOW WITH MACHINE BORE OR MANDREL OF THE SIZE REQUIRED.
   C. BORED HOLE SHALL NOT BE MORE THAN 1-INCH GREATER THAN THE OUTSIDE DIAMETER OF THE PIPE BELL.

9. TESTING.

   A. TEST PRESSURE SHALL NOT BE LESS THAN 1.5 TIMES THE WORKING PRESSURE OF THE HIGHEST POINT OF THE TEST SECTION. (U.N.O.), HYDRO STATIC TEST PRESSURE SHALL BE 150 PSI.
   B. MUM DURATION OF TEST SHALL BE 4 HOURS LONG.
   C. TEST PRESSURE SHALL NOT BE VARY BY MORE THAN ±5 PSI FOR THE DURATION OF THE TEST.
   D. REMOVE ALL AIR FROM LINE PRIOR TO TESTING. INSTALL CORPORATION COCKS AT HIGH POINTS IF NECESSARY TO REMOVE AIR.
   E. LEAKAGE SHALL BE DEFINED AS THE QUANTITY OF WATER THAT MUST BE SUPPLIED TO THE TEST SECTION TO MAINTAIN THE SPECIFIED TEST PRESSURE.
   F. ALLOWABLE LEAKAGE MUST BE LESS THAN OR EQUAL TO THAT DETERMINED BY THE FOLLOWING:

$$L = SDP / 133{,}200$$

WHERE: L = ALLOWABLE LEAKAGE, IN GALLONS PER HOUR (GPH)
S = LENGTH OF PIPE TESTED, FT.
D = NOMINAL DIAMETER OF PIPE, INCHES
P = AVERAGE TEST PRESSURE, PSI.

   G. THE ALLOWABLE LEAKAGE FOR CLOSED METAL-SEATED VALVES IS 0.0078 GPH/INCH OF NOMINAL VALVE SIZE.

10. DISINFECTION: SHALL BE IN ACCORDANCE WITH THE "RULES AND REGULATIONS FOR PUBLIC WATER SYSTEMS" AS PUBLISHED BY THE TEXAS NATURAL RESOURCE CONSERVATION COMMISSION (TNRCC) AS STATED IN AWWA C-651 FOR WATER MAINS, AWWA C-652 FOR WATER STORAGE FACILITIES, AND AWWA C-654 FOR WELLS.

TCEQ ENVIRONMENT QUALITY CHAPTER 290 PUBLIC DRINKING WATER "RULES AND REGULATIONS FOR PUBLIC WATER SYSTEMS" REQUIREMENTS:

1. SECTION 290.44 (a) (1): ALL NEWLY INSTALLED PIPES AND RELATED PRODUCTS MUST CONFORM TO AMERICAN NATIONAL STANDARDS INSTITUTE/NATIONAL SANITATION FOUNDATION (ANSI/NSF) STANDARD 61 AND MUST BE CERTIFIED BY AN ORGANIZATION ACCREDITED BY ANSI.

2. SECTION 290.44 (a) (2): ALL PLASTIC PIPE FOR USE IN PUBLIC DRINKING WATER SYSTEMS MUST ALSO BEAR THE NATIONAL SANITATION FOUNDATION SEAL OF APPROVAL (NSA-pw) AND HAVE ASTM DESIGN PRESSURE RATING OF AT LEAST 150 PSI OR A STANDARD DIMENSION RATIO OF 26 OR LESS.

3. SECTION 290.44 (d): MINIMUM PRESSURE REQUIREMENTS: THE SYSTEM MUST BE DESIGNED TO MAINTAIN A MINIMUM PRESSURE OF 35 PSI AT ALL POINTS WITHIN THE DISTRIBUTION NETWORK AT FLOW RATES OF AT LEAST 1.5 GALLONS PER MINUTE PER CONNECTION. WHEN A SYSTEM IS INTENDED TO PROVIDE FIRE FIGHTING CAPABILITY, IT MUST ALSO BE DESIGNED TO MAINTAIN A MINIMUM PRESSURE OF 20 PSI UNDER COMBINED FIRE AND DRINKING WATER FLOW CONDITIONS.

4. SECTION 290.44 (d) (4): EACH COMMUNITY PUBLIC DRINKING WATER SYSTEM SHALL PROVIDE ACCURATE METERING DEVICES AT EACH RESIDENTIAL, COMMERCIAL, OR INDUSTRIAL SERVICE CONNECTION FOR THE ACCUMULATION OF WATER USAGE DATA. A WATER SYSTEM THAT FURNISHES THE SERVICES OR COMMODITY ONLY TO ITSELF OR ITS EMPLOYEES WHEN THAT SERVICE OR COMMODITY IS NOT RESOLD TO OR USED BY OTHERS IS EXEMPT FROM THIS REQUIREMENT.

5. SECTION 290.44 (d) (6): THE SYSTEM SHALL BE DESIGNED TO AFFORD EFFECTIVE CIRCULATION OF WATER WITH A MINIMUM OF DEAD ENDS. ALL DEAD-END MAINS SHALL BE PROVIDED WITH ACCEPTABLE FLUSHING VALVES AND DISCHARGE PIPING. ALL DEAD-END LINES LESS THAN TWO (2) INCHES IN DIAMETER WILL NOT REQUIRE FLUSH VALVES IF THEY END AT A CUSTOMER SERVICE. WHERE DEAD ENDS ARE NECESSARY AS A STAGE IN THE GROWTH OF THE SYSTEM, THEY SHALL BE LOCATED AND ARRANGED TO ULTIMATELY CONNECT THE ENDS TO PROVIDE CIRCULATION.

SEWER/WATER SEPARATION DISTANCES:

1. WATER LINES SHALL BE INSTALLED NO CLOSER THAN 9-FEET IN ALL DIRECTIONS FROM EXISTING SEWER LINES AND PARALLEL LINES MUST BE INSTALLED IN SEPARATE TRENCHES. WHERE THE 9-FEET SEPARATION DISTANCE CANNOT BE ACHIEVED, THE FOLLOWING GUIDELINES SHALL APPLY. THE MINIMUM SEPARATION DISTANCES DO NOT APPLY TO CUSTOMER SERVICE LINES, ALTHOUGH THEY ARE RECOMMENDED.

   A. WHERE A WATER LINE PARALLELS A SANITARY SEWER LINE, THE VERTICAL SEPARATION SHALL BE A MINIMUM OF 2-FEET BETWEEN OUTSIDE DIAMETERS AND THE HORIZONTAL SEPARATION SHALL BE A MINIMUM OF 4-FEET BETWEEN OUTSIDE DIAMETER. THE WATER LINE SHALL BE LOCATED ABOVE THE SEWER LINE.
   B. WHERE A SANITARY SEWER LINE CROSSES A WATER LINE AND THE SEWER LINE IS CONSTRUCTED OF CAST IRON, DUCTILE IRON, OR PVC WITH A MINIMUM PRESSURE RATING OF 150 PSI, AN ABSOLUTE MINIMUM DISTANCE OF 6 INCHES BETWEEN OUTSIDE DIAMETERS SHALL BE MAINTAINED. IN ADDITION, THE SEWER LINE SHALL BE LOCATED BELOW THE WATER LINE WHERE POSSIBLE AND ONE LENGTH OF THE SEWER PIPE MUST BE CENTERED ON THE WATER LINE.
   C. WHERE A SEWER LINE CROSSES UNDER A WATER LINE AND THE SEWER LINE IS CONSTRUCTED OF ABS TRUSS PIPE, SIMILAR SEMI-RIGID PLASTIC COMPOSITE PIPE, CLAY PIPE, OR CONCRETE PIPE WITH GASKETED JOINTS, A MINIMUM OF 2-FEET SEPARATION DISTANCE SHALL BE MAINTAINED. THE INITIAL BACKFILL SHALL BE CEMENT STABILIZED SAND (2 OR MORE BAGS OF CEMENT PER CUBIC YARD OF SAND) FOR ALL SECTIONS OF SEWER LINE WITHIN 9-FEET OF THE WATER LINE. THIS INITIAL BACKFILL SHALL BE FROM 1/4 DIAMETER BELOW THE CENTERLINE OF THE PIPE TO ONE PIPE DIAMETER (BUT NOT LESS THAN 12-INCHED) ABOVE TOP OF THE PIPE.
   D. WHERE A SEWER LINE CROSSES OVER A WATER LINE ALL PORTIONS OF THE SEWER LINE WITHIN 9-FEET OF THE WATER LINE SHALL BE CONSTRUCTED OF CAST IRON, DUCTILE IRON OR PVC PIPE WITH A PRESSURE RATING OF AT LEAST 150 PSI USING APPROPRIATE ADAPTERS. IN LIEU OF THIS PROCEDURE, THE NEW CONVEYANCE MAY BE ENCASED IN A JOINT OF 150 PSI PRESSURE CLASS PIPE AT LEAST 18-FEET LONG AND TWO NORMAL SIZES LARGER THAN THE NEW CONVEYANCE. THE SPACE AROUND THE CARRIER PIPE SHALL BE SUPPORTED AT 5-FEET INTERVALS WITH SPACERS OR BE FILLED TO THE SPRING LINE WITH WASHED SAND. THE ENCASEMENT PIPE SHOULD BE CENTERED ON THE CROSSING AND BOTH ENDS SEALED WITH CEMENT GROUT OR MANUFACTURED SEAL.
   E. THE SEWER LINE NEED NOT BE DISTURBED WHERE A NEW WATER LINE TO BE INSTALLED PARALLEL TO AN EXISTING SEWER LINE THAT SHOWS NO EVIDENCE OF LEAKAGE AND THE WATERLINE IS INSTALLED ABOVE THE SEWER LINE A MINIMUM OF 2-FEET VERTICALLY AND 4-FEET HORIZONTALLY. SHOULD EXCAVATION FOR THE WATER LINE PRODUCE EVIDENCE THAT THE SEWER IN LEAKING, THE SEWER LINE MUST BE REPAIRED OR REPLACED AS DESCRIBED IN PARAGRAPHS A OR D ABOVE.
   F. THE SEWER LINE NEED TO BE DISTURBED WHERE A NEW WATER LINE IS TO CROSS OVER (BY 2-FEET OR MORE) EXISTING SEWER LINES SHOWING NO EVIDENCE OF LEAKAGE. SHOULD EXCAVATION FOR THE WATER LINE PRODUCE EVIDENCE THAT THE SEWER LINE IS LEAKING, THEN THE SEWER LINE MUST BE REPAIRED OR REPLACED AS DESCRIBED IN PARAGRAPHS C OR D.

2. UNLESS SANITARY SEWER MANHOLES AND THE CONNECTION SEWER LINES CAN BE MADE WATERTIGHT AND TESTED FOR NO LEAKAGE, THEY MUST BE INSTALLED SO AS TO PROVIDE A MINIMUM OF 9-FEET HORIZONTAL CLEARANCE FROM AN EXISTING OR PROPOSED WATER LINE. WHERE THE 9-FEET SEPARATION DISTANCE CANNOT BE ACHIEVED, AN ENCASEMENT PIPE AS DESCRIBED IN PARAGRAPH D ABOVE MAY BE USED FOR THE WATER LINE.

3. FIRE HYDRANTS SHALL NOT BE INSTALLED WITHIN 9-FEET VERTICALLY OR HORIZONTALLY OF ANY SANITARY SEWER LINE REGARDLESS OF CONSTRUCTION.

4. NO PHYSICAL CONNECTION SHALL BE MADE BETWEEN A DRINKING WATER SUPPLY AND A SEWER LINE. ANY APPURTENANCE SHALL BE DESIGNED AND CONSTRUCTED SO AS TO PREVENT ANY POSSIBILITY OF SEWAGE ENTERING THE DRINKING WATER SYSTEM.

5. NO SEWER LINE CARRYING DOMESTIC OR INDUSTRIAL WASTES SHALL CROSS SUCTION MAINS TO PUMPING EQUIPMENT. WATER LINES SHALL NOT BE INSTALLED CLOSER THAN 10-FEET TO SEPTIC TANK DRAIN FIELDS. NO RAW WATER LINES SHALL BE INSTALLED WITHIN 5-FEET OF ANY TILE OR CONCRETE SANITARY SEWER.

SANITARY SEWER TESTING:

1. LOW PRESSURE AIR TEST: PERFORM ALL GRAVITY SEWERS IN ACCORDANCE WITH THE REQUIREMENTS OF THE STATE DESIGN CRITERIA PARAGRAPH 317.2 (A)(4) AND ASTM C-828 AND ASTM C-924. FOR SECTIONS OF PIPE LESS THAN 36 INCH AVERAGE INSIDE DIAMETER, THE MINIMUM TIME ALLOWABLE FOR THE PRESSURE TO DROP FROM 3.5 POUNDS PER SQUARE INCH GAGE TO 2.5 POUNDS PER SQUARE INCH GAUGE SHALL BE COMPUTED FROM THE FOLLOWING EQUATION:

$$T = 0.0850\ (D)(K)/(Q)$$

WHERE,

T = TIME FOR PRESSURE TO DROP 1.0 POUND PER SQUARE INCH GAUGE IN SECONDS.
K = 0.000419 (D)(L), BUT NOT LESS THAN 1.0
D = AVERAGE INSIDE DIAMETER IN INCHES
L = LENGTH OF LINE IN FEET OF SAME PIPE SIZE BEING TESTED
Q = RATE OF LOSS, 0.0015 CUBIC FEET PER MINUTE PER SQUARE FOOT INTERNAL SURFACE

SINCE A "K" VALUE OF LESS THAN 1.0 SHALL NOT BE USED, THERE ARE MINIMUM TESTING TIMES FOR EACH PIPE DIAMETER.

PIPE DIAMETER (INCHES)	MINIMUM TIME (SECONDS)	LENGTH FOR MINIMUM TIME (FEET)	TIME FOR LONGER LENGTH (SECONDS)
6	340	398	0.855 (L)
8	454	298	1.520 (L)
10	567	239	2.374 (L)
12	680	199	3.419 (L)
15	850	159	5.342 (L)
18	1020	133	7.693 (L)
21	1190	114	10.471 (L)
24	1360	100	13.676 (L)
27	1530	88	17.309 (L)
30	1700	80	21.369 (L)
33	1870	72	25.856 (L)

FOR SECTIONS OF PIPE WHICH HAVE AN AVERAGE INSIDE DIAMETER LESS THAN 36-INCHES THE FOLLOWING OPTION IS AVAILABLE. THE TEST MAY BE STOPPED IF NO PRESSURE LOSS HAS OCCURRED DURING THE 25% OF THE CALCULATED TESTING TIME. IF ANY PRESSURE LOSS OR LEAKAGE HAS OCCURRED DURING THE FIRST 25% OF THE TESTING PERIOD, THEN THE TEST SHALL CONTINUE UNTIL FAILURE. LINES WITH A 36-INCH AVERAGE INSIDE DIAMETER AND LARGER MAY BE AIR TESTED AT EACH JOINT. IF AN AIR TEST IS USED, A VISUAL INSPECTION OF THE LINE BETWEEN THE JOINTS SHALL BE PERFORMED IMMEDIATELY AFTER THE AIR TEST. THE MINIMUM TIME ALLOWABLE FOR THE PRESSURE TO DROP FOR 3.5 PSIG TO 2.5 PSIG DURING A JOINT TEST, REGARDLESS OF PIPE SIZE, SHALL BE 10 SECONDS.

2. DEFLECTION TEST: AFTER BACKFILL HAS BEEN IN PLACE AT LEAST THIRTY (30) DAYS, MANUALLY RUN A RIGID BALL OR MANDREL THROUGH THE PIPE. THE BALL OR MANDREL SHALL HAVE A DIAMETER EQUAL TO 95% OF THE INSIDE DIAMETER OF THE PIPE. PERFORM THE TEST WITHOUT MECHANICAL PULLING DEVICE. MAXIMUM ALLOWABLE PIPE DEFLECTION AFTER INSTALLATION AND BACKFILL SHALL BE 5% PER ASTM D-3034. SUBMIT TEST RESULTS TO THE ENGINEER.

COUNTY APPROVAL:
SIGNATURE _____ DATE_____

SANITARY SEWER CONSTRUCTION:

1. GRAVITY SANITARY SEWERS

   A. PIPE: USE PVC SEWER PIPE CONFORMING TO ASTM D-1784 WITH CELL CLASSIFICATION OF 12454-B. THE SDR (RATIO OF DIAMETER TO WALL THICKNESS) SHALL BE 26 FOR ALL SEWERS CONFORMING TO ASTM D3034.
   B. FITTINGS: PVC PIPE FITTINGS SHALL BE FULL BODIED, EITHER INJECTION MOLDED OR FACTORY FABRICATED.
   C. JOINTS: SPIGOT AND INTEGRATED WALL SECTION BELL WITH SOLID CROSS SECTION ELASTOMERIC OR RUBBER RING GASKET CONFORMING TO ASTM D-3212 AND STM F-477.

2. BEDDING, BACKFILL AND TOPSOIL: BEDDING SHALL BE BANK SAND OR NATIVE MATERIAL AS DETERMINED BY ENGINEER. BACKFILL SHALL BE CEMENT STABILIZED SAND (1-1/2 SACK/TON) WHEN EXCAVATION IS A DISTANCE OF 5 FEET OR LESS FROM EDGE OF PAVEMENT. FOR EXCAVATIONS GREATER THAN 5 FEET, NATIVE MATERIAL SHALL BE USED. TOPSOIL SHALL BE NATIVE MATERIAL UNLESS OTHERWISE SPECIFIED.

3. COMPACTION: FOR EXCAVATIONS A DISTANCE OF 5 FEET OR LESS FROM EDGE OF PAVEMENT PROVIDE COMPACTION TO 95% OF MAXIMUM DENSITY AS DETERMINED BY ASTM D-698 (STANDARD PROCTOR). FOR EXCAVATIONS GREATER THAN 5 FEET, PROVIDE COMPACTION TO 85% MAXIMUM DENSITY.

4. PIPE INSTALLATION (BY OPEN CUT)

   A. INSTALL PIPE IN ACCORDANCE WITH THE RECOMMENDED PRACTICE FOR INSTALLATION OF PVC PIPE UNI-B-5.
   B. FLOW LINE ELEVATIONS ARE BASED ON LENGTHS BETWEEN MANHOLES' VERTICAL CENTERLINE.
   C. MAKE ALL CONNECTIONS TO EXISTING STUBS OR SERVICES USION FERNCO ADAPTER OR APPROVED EQUAL. USE 1/2" STAINLESS STEEL BANDS FOR SECURING CONNECTOR TO PIPE.
   D. ALL STUBS REGARDLESS OF DIAMETER, SHALL BE 13 FEET IN LENGTH UNLESS OTHERWISE SHOWN ON DRAWINGS.
   E. KEEP EXCAVATIONS FREE OF WATER DURING CONSTRUCTION AND UNTIL FINAL INSPECTION.
   F. WHEN WORK IS NOT IN PROGRESS, COVER THE EXPOSED ENDS OF PIPES WITH AN APPROVED PLUG TO PREVENT FOREIGN MATERIAL FROM ENTERING PIPE.
   G. REINFORCED DETECTION MARKING TAPE SHALL BE INSTALLED ABOVE FORCE MAINS. USE TERRA TAPE SENTRY LINE 1350 BY REEF INDUSTRIES OR EQUAL.

5. PIPE INSTALLATION (OTHER THAN OPEN CUT)

   A. ALL JOINTS FOR PIPE IN THE HOLE SHALL BE MADE UP PRIOR TO THE PIPE ENTERING THE BORE.
   B. BORED HOLE FOR ROAD CROSSING SHALL UTILIZE WATER ONLY FOR LUBRICATION. USE 2-INCH PILOT HOLE FOR ALIGNMENT AND GRADE. FOLLOW WITH MACHINE BORE OR MANDREL OF THE SIZE REQUIRED.
   C. BORED HOLE SHALL NOT BE MORE THAN 1-INCH GREATER THAN OUTSIDE DIAMETER OF THE PIPE BELL.
   D. ALL JOINTS FOR PIPE IN THE HOLE SHALL BE MADE UP PRIOR TO THE PIPE ENTERING THE BORE.
   E. CASING: STEEL CASING PIPE SHALL CONFORM TO ASTM A-53, STANDARD WALL THICKNESS, UNLESS OTHERWISE SHOWN ON DRAWINGS. JOINTS SHALL BE WELDED.

6. SERVICE CONNECTIONS:

   A. PIPE: SAME AS SPECIFIED UNDER GRAVITY SEWERS FOR LINES UP TO PROPERTY LINES. PVC SCHEDULE 40 FOR LINES INSIDE PROPERTY LINE TO BUILDING/ UNIT.
   B. FITTINGS: PVC PIPE FITTINGS SHALL BE FULL BODIED, EITHER INJECTION MOLDED OR FACTORY FABRICATED.
   C. PIPE SADDLES: ONE-PIECE FABRICATED PVC SADDLE WITH NEOPRENE GASKET. GASKET SHALL BE REMOVED, CLEANED AND REFASTENED BY CONTRACTOR USING SPECIFIED SEALANT.
   D. SEALANT: USE ULTRASEAL P-201 BY ADEKA OR EQUAL. PLACE BEAD OF SEALANT AROUND REFASTENED GASKET TO PROVIDE A WATERTIGHT SEAL BETWEEN UNEVEN SURFACES.
   E. COUPLINGS: FOR CONNECTION BETWEEN STUB OUT AND EXISTING SERVICE USE A FERNCO ADAPTER. USE 1/2-INCH STAINLESS STEEL BANDS FOR SECURING SADDLES TO MAIN AND COUPLINGS OF SERVICE LINES.
   F. BACKFILL: USE NATIVE MATERIAL AS APPROVED BY ENGINEER. PROVIDE CEMENT STABILIZED SAND (1-1/2 SACK/TON) WHEN EXCAVATING A DISTANCE OF 5 FEET OR LESS FORM EXISTING PAVEMENT.

7. MANHOLES

   A. SANITARY SEWER MANHOLES SHALL BE PRECAST CONCRETE CONFORMING TO ASTM C-478. CAST-IN-PLACE MANHOLES ARE NOT ACCEPTED. TOP SLAB SHALL BE DESIGNED FOR H20 LOADING. CONE TOP IS ACCEPTABLE.
   B. MANHOLE COVERS SHALL BE CAST AS REQUIRED BY THE CITY.
   C. PROVIDE 2 ROWS OF MASTIC BETWEEN GRADE RINGS FOR A WATERTIGHT SEAL. DO NOT USE MORE THAN 3 RINGS.
   D. EACH PRECAST BOTTOM SHALL HAVE INVERTS CAST-IN-PLACE WITH 0.1 FT. FALL BETWEEN INLET AND OUTLET. FOR DIFFERENT SIZE LINES MATCH CROWNS UNLESS OTHERWISE SHOWN ON DRAWINGS.
   E. PIPE OPENINGS SHALL BE FURNISHED WITH A FLEXIBLE CONNECTOR AND STAINLESS STEEL (TYPE 316) BANDS FOR A WATERTIGHT SEAL.
   F. MANHOLES WITHIN EASEMENTS, RIM ELEVATION TO BE 3-INCHES TO 6-INCHES ABOVE NATURAL GRADE OR AS SHOWN ON DRAWINGS. MANHOLES IN ROAD OR DITCH, RIM ELEVATION = ROAD ELEVATION.
   G. MORTAR: CONFORM TO REQUIREMENTS OF ASTM C-270, TYPE S USING PORTLAND CEMENT.
   H. DROP CONNECTIONS AND STUBS SHALL CONFORM TO THE SAME PIPE MATERIAL REQUIREMENTS OF THE MAIN PIPE, UNLESS OTHERWISE INDICATED ON THE DRAWINGS.
   I. INSTALL MANHOLES TO CONFORM TO LOCATIONS AND DIMENSIONS SHOWN ON DRAWINGS.
   J. MANHOLES WITHIN EASEMENTS, RIM ELEVATION SHALL BE 3-INCHES TO 6-INCHES ABOVE NATURAL GRADE OR AS SHOWN ON DRAWINGS. MANHOLES IN ROAD OR DITCH, RIM ELEVATION = ROAD ELEVATION.
   K. MANHOLES DESIGNATED WITH "X" OR "Y" SHALL BE APPLICABLE TO AN MANHOLE TYPES. MANHOLES TYPES "A" AND "B" MAY BE MODIFIED AS DESIGNATED BY THE "X" AND "Y" SUFFIX.
   L. ACCEPTABLE METHOD FOR HOLES FOR NEW SEWERS IN EXISTING CONCRETE MANHOLES SHALL BE CORED.
   M. EXFILTRATION TEST: PLUG ALL SEWER LINES MINIMUM 6-INCHES ON MANHOLE WALL AND FILL MANHOLE WITH WATER. THE AMOUNT OF WATER NECESSARY TO MAINTAIN A CONSTANT LEVEL IN THE MANHOLE SHALL BE MEASURED. LEAKAGE SHALL NOT EXCEED 0.1 GAL/FT. DIAMETER/ FT. OF MANHOLE DEPTH PER HOUR.
   N. VACUUM TEST: INSTALL TESTER HEAD ASSEMBLY AT TOP OF MANHOLE AND INFLATE SEAL IN ELEMENT PER MANUFACTURER'S INSTRUCTIONS TO RECOMMEND MAXIMUM INFRACTION PRESSURE. EVACUATE 10-INCHES MERCURY (Hg), DISCONNECT PUMP AND MONITOR VACUUM FOR TIME PERIOD REQUIRED BELOW.

DEPTH OF MANHOLE	MANHOLE DIAMETER 48"	60"	72"
4'	10 SEC	13 SEC.	16 SEC
8'	20	26	32
12'	30	39	48
16'	40	52	64
20'	50	65	80
24'	50	78	96
*	5	6.5	8

* ADD TIME FOR EACH ADDITIONAL 2' DEPTH

GALVESTON COUNTY
BEACH PAVILION
CRYSTAL BEACH, TX 77650

BE-Arc LLC Project No : C-13-007.01

SHELMARK ENGINEERING, L.L.C.
CIVIL | MARINE | PLANNING | STRUCTURAL
501 FM 517 ROAD EAST | DICKINSON, TEXAS 77539
TE FIRM NO. F-2113

INTERIM SUBMITTAL
DOCUMENT INTENDED FOR REVIEW ONLY. NOT ISSUED FOR CONSTRUCTION.

ENGINEER:
MARCUS J. MICHNA P.E.
REGISTRATION NO. 84739

DATE: 09/29/2017

DATE	REVISION

DESIGN DEVELOPMENT

DATE ISSUED:
9/29/2017

COPYRIGHT 2017
Project No: 17-217

C0.02

GENERAL NOTES

GENERAL NOTES:

1. REFERENCE LINES AND GRADES

A. THE OWNER SHALL PROVIDE REFERENCES FOR LINE AND GRADE. IT SHALL BE THE CONTRACTOR'S RESPONSIBILITY TO MAINTAIN THE REFERENCE POINTS AND REPLACE THEM IF LOST OR DAMAGED.

2. EXISTING UTILITIES

A. VERIFY LOCATION AND ELEVATION OF EXISTING FACILITIES PRIOR TO CONSTRUCTION OF PROPOSED FACILITIES.
B. PROTECT ALL EXISTING UTILITIES DURING CONSTRUCTION.
C. THE TYPE, SIZE, LOCATION AND OWNERSHIP OF EXISTING UTILITIES HAVE BEEN OBTAINED FROM RECORD DRAWINGS FURNISHED BY THE OWNER. INFORMATION DERIVED FROM THESE SOURCES IS BELIEVED TO BE THE MOST RELIABLE AVAILABLE AND IS PROVIDED FOR THE CONTRACTOR'S INFORMATION ONLY. THE CONTRACTOR SHALL NOTIFY EACH PIPELINE OWNER AND VERIFY ITS ACTUAL FIELD LOCATION PRIOR TO EXCAVATION. NO WARRANTY IS GIVEN AS TO THE ACCURACY OR COMPLETENESS OF UTILITY LOCATION SHOWN ON THESE DRAWINGS.
D. AT LEAST 30 DAYS PRIOR TO COMMENCING ANY EXCAVATING OR OTHER CONSTRUCTION ACTIVITY IN THE VICINITY OF THE UTILITY, NOTIFY THE TEXAS EXCAVATION SAFETY SYSTEM AT 1-800-DIG-TESS (344-8377).
E. NO EXCAVATING OR OTHER CONSTRUCTION ACTIVITY SHALL BE CONDUCTED IN THE IMMEDIATE VICINITY OF A PIPELINE IN THE ABSENCE OF A PIPELINE REPRESENTATIVE. THE CONTRACTOR SHALL DETERMINE THE EXACT LOCATION BEFORE COMMENCING WORK, AND SHALL BE RESPONSIBLE FOR ANY DAMAGES CAUSED BY HIS FAILURE TO EXACTLY LOCATE AND PRESERVE THESE UNDERGROUND FACILITIES.
F. OVERHEAD LINES MAY EXIST ON THE PROPERTY. THEY HAVE NOT BEEN MARKED SINCE THEY ARE CLEARLY VISIBLE. THE CONTRACTOR SHALL LOCATE THEM PRIOR TO BEGINNING ANY CONSTRUCTION. TEXAS LAW, SECTION 752, HEALTH AND SAFETY CODE, FORBIDS ALL ACTIVITIES IN WHICH PERSONS OR THINGS MAY COME WITHIN 6 FEET OF LIVE OVERHEAD HIGH VOLTAGE LINES. CONTRACTORS AND OWNERS ARE LEGALLY RESPONSIBLE FOR THE SAFETY OF CONSTRUCTION WORKERS UNDER THIS LAW. THIS LAW CARRIES BOTH CRIMINAL AND CIVIL LIABILITY.

3. EXISTING CONDITIONS:

A. EXCESS EXCAVATED MATERIAL SHALL BE DISPOSED OF AS DIRECTED BY THE OWNER OR AS SPECIFIED ON THE DRAWINGS. SOIL SHALL NOT BE DEPOSITED GREATER THAN 4" DEEP WITHOUT PERMISSION FROM THE OWNER.

4. PERMITS:

A. OWNER TO OBTAIN ALL PERMITS REQUIRED BY CITY, COUNTY, AND STATE AGENCIES PRIOR TO STARTING CONSTRUCTION OF UTILITY AND/OR CULVERTS WITHIN ROAD RIGHT-OF-WAYS.
B. CONTRACTOR SHALL ASSURE HIMSELF THAT ALL CONSTRUCTION PERMITS HAVE BEEN OBTAINED PRIOR TO COMMENCEMENT OF WORK. REQUIRED PERMITS THAT CAN ONLY BE ISSUED TO CONTRACTOR SHALL BE OBTAINED AT HIS EXPENSE.

5. SAFETY:

A. OBSERVE ALL FEDERAL, STATE, AND LOCAL SAFETY REGULATIONS WHEN WORKING IN OR NEAR PUBLIC ROAD RIGHT-OF-WAYS.
B. CONTRACTOR SHALL COMPLY WITH OSHA REGULATIONS AND STATE OF TEXAS LAWS CONCERNING EXCAVATION, TRENCHING, AND SHORING.

THE AREA OF THIS SURVEY IS IN FIRM 485470 0124E MAP REVISED JULY 5, 1993, ZONE A15 BFE 15.

SURVEYOR NOTES:
1) THIS PROPERTY DOES LIE WITHIN THE 100 YEAR FLOOD PLAIN AS ESTABLISHED BY THE FEDERAL EMERGENCY MANAGEMENT AGENCY.
2) THIS PROPERTY IS SUBJECT TO ANY RESTRICTIONS OF RECORD AND MAY BE SUBJECT TO SETBACKS FROM POWER LINES AS ESTABLISHED BY OSHA (CALL YOUR POWER COMPANY).
3) GRID BEARINGS BASED ON MONUMENTATION OF WEST R.O.W. LINE OF NOBLE CARL DRIVE.
4) ELEVATIONS ARE SHOWN IN FEET ABOVE MEAN SEA LEVEL NAVD '88 DATUM AS TIED TO NGS MONUMENT HGCSD 64.
5) SURVEYED WITHOUT BENEFIT OF A TITLE REPORT.

COUNTY APPROVAL:
SIGNATURE _____ DATE_____

60 0 60 120 180 Feet
SCALE: 1"=60'

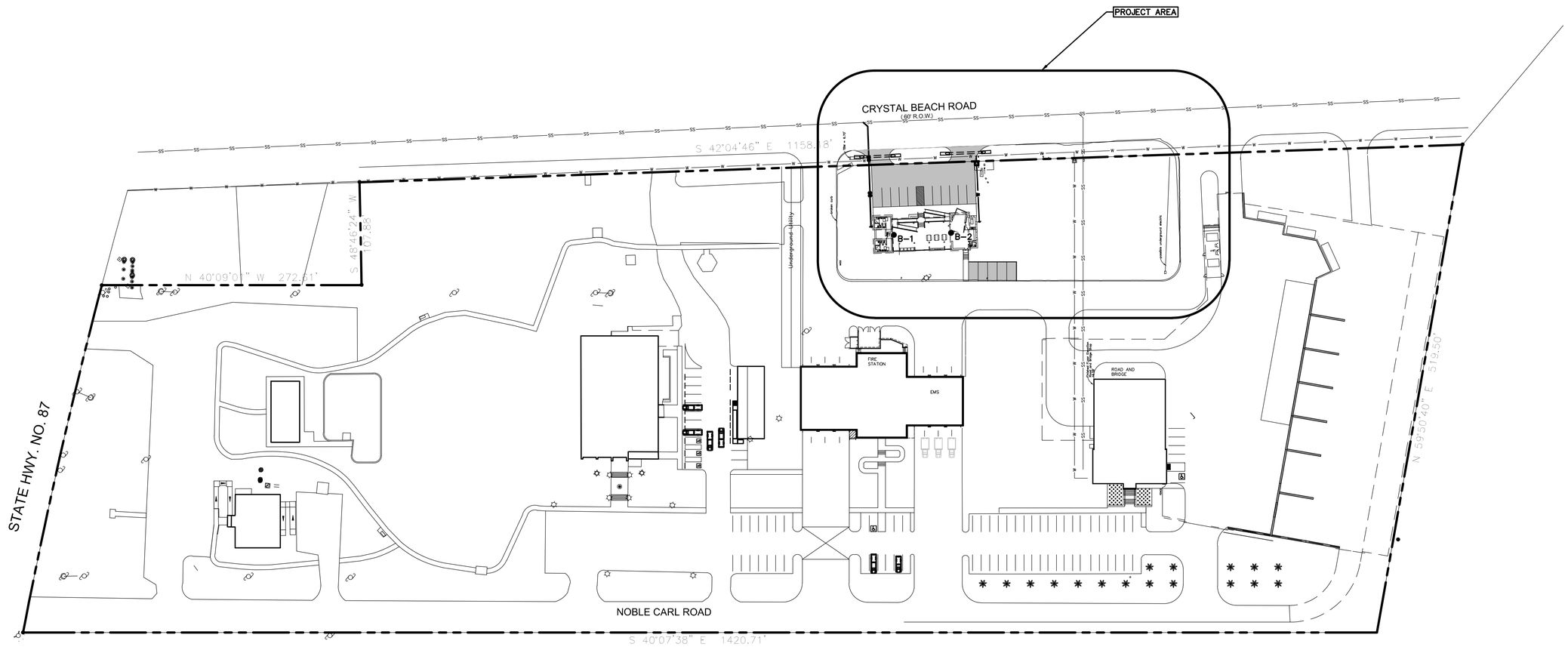

GALVESTON COUNTY BEACH PAVILION CRYSTAL BEACH, TX 77650

BE-Arc LLC Project No : C-13-007.01

SHELMARK ENGINEERING, L.L.C.
CIVIL | MARINE | PLANNING | STRUCTURAL
501 FM 517 ROAD EAST | DICKINSON, TEXAS 77539
TE FIRM NO. F-2119

INTERIM SUBMITTAL
DOCUMENT INTENDED FOR REVIEW ONLY. NOT ISSUED FOR CONSTRUCTION.

ENGINEER:
MARCUS J. MICHNA P.E.
REGISTRATION NO. 84739

DATE: 09/29/2017

DATE	REVISION

DESIGN DEVELOPMENT

DATE ISSUED:
9/29/2017

COPYRIGHT 2017
Project No: 17-217

C1.01

SITE PLAN

GENERAL NOTES:

1. REFERENCE LINES AND GRADES

A. THE OWNER SHALL PROVIDE REFERENCES FOR LINE AND GRADE. IT SHALL BE THE CONTRACTOR'S RESPONSIBILITY TO MAINTAIN THE REFERENCE POINTS AND REPLACE THEM IF LOST OR DAMAGED.

2. EXISTING UTILITIES

A. VERIFY LOCATION AND ELEVATION OF EXISTING FACILITIES PRIOR TO CONSTRUCTION OF PROPOSED FACILITIES.
B. PROTECT ALL EXISTING UTILITIES DURING CONSTRUCTION.
C. THE TYPE, SIZE, LOCATION AND OWNERSHIP OF EXISTING UTILITIES HAVE BEEN OBTAINED FROM RECORD DRAWINGS FURNISHED BY THE OWNER. INFORMATION DERIVED FROM THESE SOURCES IS BELIEVED TO BE THE MOST RELIABLE AVAILABLE AND IS PROVIDED FOR THE CONTRACTOR'S INFORMATION ONLY. THE CONTRACTOR SHALL NOTIFY EACH PIPELINE OWNER AND VERIFY ITS ACTUAL FIELD LOCATION PRIOR TO EXCAVATION. NO WARRANTY IS GIVEN AS TO THE ACCURACY OR COMPLETENESS OF UTILITY LOCATION SHOWN ON THESE DRAWINGS.
D. AT LEAST 30 DAYS PRIOR TO COMMENCING ANY EXCAVATING OR OTHER CONSTRUCTION ACTIVITY IN THE VICINITY OF THE UTILITY, NOTIFY THE TEXAS EXCAVATION SAFETY SYSTEM AT 1-800-DIG-TESS (344-8377).
E. NO EXCAVATING OR OTHER CONSTRUCTION ACTIVITY SHALL BE CONDUCTED IN THE IMMEDIATE VICINITY OF A PIPELINE IN THE ABSENCE OF A PIPELINE REPRESENTATIVE. THE CONTRACTOR SHALL DETERMINE THE EXACT LOCATION BEFORE COMMENCING WORK, AND SHALL BE RESPONSIBLE FOR ANY DAMAGES CAUSED BY HIS FAILURE TO EXACTLY LOCATE AND PRESERVE THESE UNDERGROUND FACILITIES.

F. OVERHEAD LINES MAY EXIST ON THE PROPERTY. THEY HAVE NOT BEEN MARKED SINCE THEY ARE CLEARLY VISIBLE. THE CONTRACTOR SHALL LOCATE THEM PRIOR TO BEGINNING ANY CONSTRUCTION. TEXAS LAW, SECTION 752, HEALTH AND SAFETY CODE, FORBIDS ALL ACTIVITIES IN WHICH PERSONS OR THINGS MAY COME WITHIN 6 FEET OF LIVE OVERHEAD HIGH VOLTAGE LINES. CONTRACTORS AND OWNERS ARE LEGALLY RESPONSIBLE FOR THE SAFETY OF CONSTRUCTION WORKERS UNDER THIS LAW. THIS LAW CARRIES BOTH CRIMINAL AND CIVIL LIABILITY.

3. EXISTING CONDITIONS:

A. EXCESS EXCAVATED MATERIAL SHALL BE DISPOSED OF AS DIRECTED BY THE OWNER OR AS SPECIFIED ON THE DRAWINGS. SOIL SHALL NOT BE DEPOSITED GREATER THAN 4" DEEP WITHOUT PERMISSION FROM THE OWNER.

4. PERMITS:

A. OWNER TO OBTAIN ALL PERMITS REQUIRED BY CITY, COUNTY, AND STATE AGENCIES PRIOR TO STARTING CONSTRUCTION OF UTILITY AND/OR CULVERTS WITHIN ROAD RIGHT-OF-WAYS.
B. CONTRACTOR SHALL ASSURE HIMSELF THAT ALL CONSTRUCTION PERMITS HAVE BEEN OBTAINED PRIOR TO COMMENCEMENT OF WORK. REQUIRED PERMITS THAT CAN ONLY BE ISSUED TO CONTRACTOR SHALL BE OBTAINED AT HIS EXPENSE.

5. SAFETY:

A. OBSERVE ALL FEDERAL, STATE, AND LOCAL SAFETY REGULATIONS WHEN WORKING IN OR NEAR PUBLIC ROAD RIGHT-OF-WAYS.
B. CONTRACTOR SHALL COMPLY WITH OSHA REGULATIONS AND STATE OF TEXAS LAWS CONCERNING EXCAVATION, TRENCHING, AND SHORING.

THE AREA OF THIS SURVEY IS IN FIRM 485470 0124E MAP REVISED JULY 5, 1993, ZONE A15 BFE 15.

SURVEYOR NOTES:
1) THIS PROPERTY DOES LIE WITHIN THE 100 YEAR FLOOD PLAIN AS ESTABLISHED BY THE FEDERAL EMERGENCY MANAGEMENT AGENCY.
2) THIS PROPERTY IS SUBJECT TO ANY RESTRICTIONS OF RECORD AND MAY BE SUBJECT TO SETBACKS FROM POWER LINES AS ESTABLISHED BY OSHA (CALL YOUR POWER COMPANY).
3) GRID BEARINGS BASED ON MONUMENTATION OF WEST R.O.W. LINE OF NOBLE CARL DRIVE.
4) ELEVATIONS ARE SHOWN IN FEET ABOVE MEAN SEA LEVEL NAVD '88 DATUM AS TIED TO NGS MONUMENT HGCSD 64.
5) SURVEYED WITHOUT BENEFIT OF A TITLE REPORT.

WATER & SANITARY SEWER PLAN LEGEND

M	PROPOSED WATER METER BOX
SS	EXISTING SANITARY SEWER LINE
	PROPOSED SANITARY SEWER LINE
W	EXISTING WATER LINE
	PROPOSED WATER LINE

COUNTY APPROVAL:
SIGNATURE _____ DATE _____

20 0 20 40 60 Feet
SCALE: 1"=20'

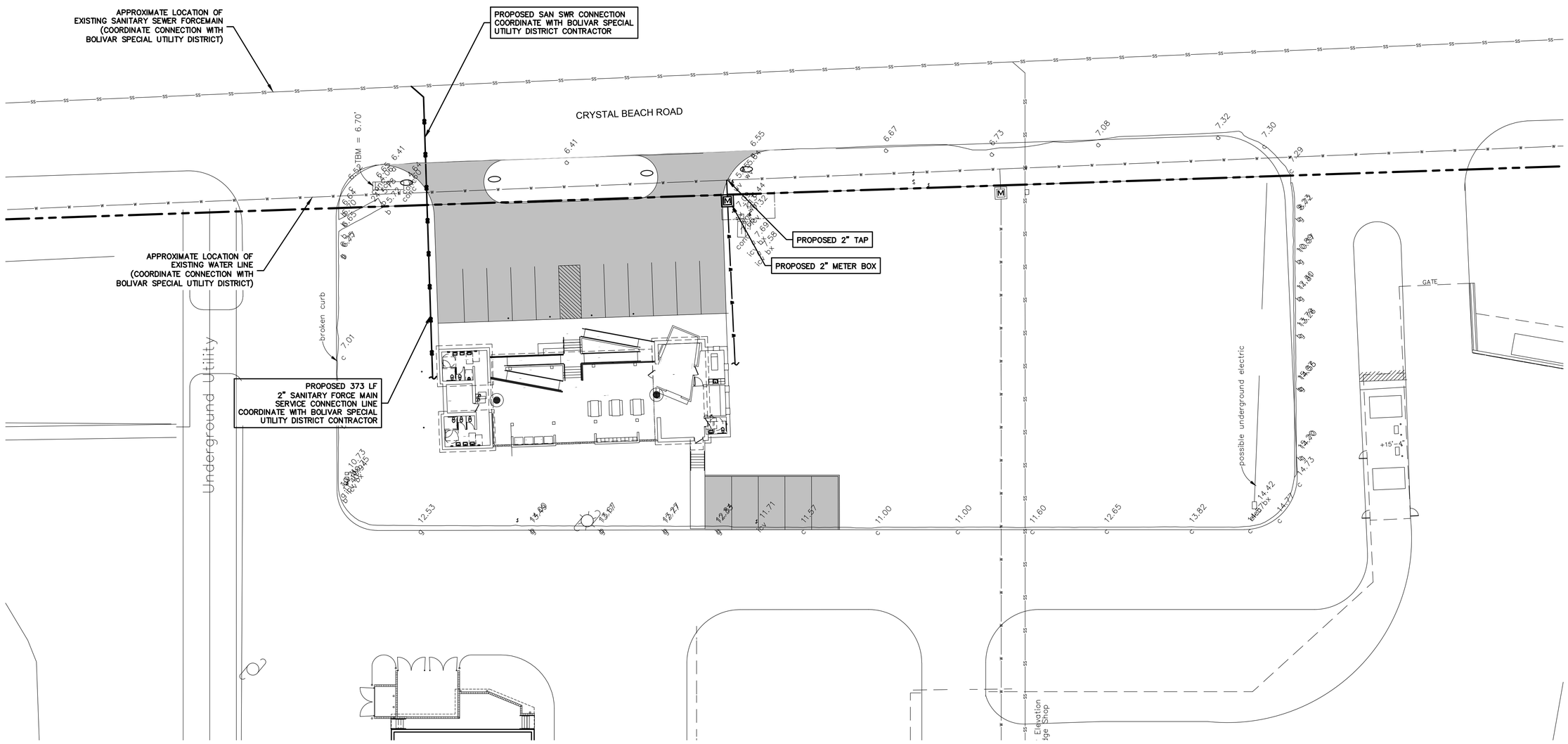

GALVESTON COUNTY
BEACH PAVILION
CRYSTAL BEACH, TX 77650

BE-Arc LLC Project No : C-13-007.01

SHELMARK ENGINEERING, L.L.C.
CIVIL | MARINE | PLANNING | STRUCTURAL
501 FM 517 ROAD EAST | DICKINSON, TEXAS 77539
TE FIRM NO. F-2113

INTERIM SUBMITTAL
DOCUMENT INTENDED FOR REVIEW ONLY. NOT ISSUED FOR CONSTRUCTION.

ENGINEER:
MARCUS J. MICHNA P.E.
REGISTRATION NO. 84739

DATE: 09/29/2017

DATE	REVISION

DESIGN DEVELOPMENT

DATE ISSUED:
9/29/2017

COPYRIGHT 2017
Project No: 17-217

C1.02

WATER & SANITARY PLAN

GENERAL NOTES:

1. REFERENCE LINES AND GRADES

A. THE OWNER SHALL PROVIDE REFERENCES FOR LINE AND GRADE. IT SHALL BE THE CONTRACTOR'S RESPONSIBILITY TO MAINTAIN THE REFERENCE POINTS AND REPLACE THEM IF LOST OR DAMAGED.

2. EXISTING UTILITIES

A. VERIFY LOCATION AND ELEVATION OF EXISTING FACILITIES PRIOR TO CONSTRUCTION OF PROPOSED FACILITIES.
B. PROTECT ALL EXISTING UTILITIES DURING CONSTRUCTION.
C. THE TYPE, SIZE, LOCATION AND OWNERSHIP OF EXISTING UTILITIES HAVE BEEN OBTAINED FROM RECORD DRAWINGS FURNISHED BY THE OWNER. INFORMATION DERIVED FROM THESE SOURCES IS BELIEVED TO BE THE MOST RELIABLE AVAILABLE AND IS PROVIDED FOR THE CONTRACTOR'S INFORMATION ONLY. THE CONTRACTOR SHALL NOTIFY EACH PIPELINE OWNER AND VERIFY ITS ACTUAL FIELD LOCATION PRIOR TO EXCAVATION. NO WARRANTY IS GIVEN AS TO THE ACCURACY OR COMPLETENESS OF UTILITY LOCATION SHOWN ON THESE DRAWINGS.
D. AT LEAST 30 DAYS PRIOR TO COMMENCING ANY EXCAVATING OR OTHER CONSTRUCTION ACTIVITY IN THE VICINITY OF THE UTILITY, NOTIFY THE TEXAS EXCAVATION SAFETY SYSTEM AT 1-800-DIG-TESS (344-8377).
E. NO EXCAVATING OR OTHER CONSTRUCTION ACTIVITY SHALL BE CONDUCTED IN THE IMMEDIATE VICINITY OF A PIPELINE IN THE ABSENCE OF A PIPELINE REPRESENTATIVE. THE CONTRACTOR SHALL DETERMINE THE EXACT LOCATION BEFORE COMMENCING WORK, AND SHALL BE RESPONSIBLE FOR ANY DAMAGES CAUSED BY HIS FAILURE TO EXACTLY LOCATE AND PRESERVE THESE UNDERGROUND FACILITIES.

F. OVERHEAD LINES MAY EXIST ON THE PROPERTY. THEY HAVE NOT BEEN MARKED SINCE THEY ARE CLEARLY VISIBLE. THE CONTRACTOR SHALL LOCATE THEM PRIOR TO BEGINNING ANY CONSTRUCTION. TEXAS LAW, SECTION 752, HEALTH AND SAFETY CODE, FORBIDS ALL ACTIVITIES IN WHICH PERSONS OR THINGS MAY COME WITHIN 6 FEET OF LIVE OVERHEAD HIGH VOLTAGE LINES. CONTRACTORS AND OWNERS ARE LEGALLY RESPONSIBLE FOR THE SAFETY OF CONSTRUCTION WORKERS UNDER THIS LAW. THIS LAW CARRIES BOTH CRIMINAL AND CIVIL LIABILITY.

3. EXISTING CONDITIONS:

A. EXCESS EXCAVATED MATERIAL SHALL BE DISPOSED OF AS DIRECTED BY THE OWNER OR AS SPECIFIED ON THE DRAWINGS. SOIL SHALL NOT BE DEPOSITED GREATER THAN 4" DEEP WITHOUT PERMISSION FROM THE OWNER.

4. PERMITS:

A. OWNER TO OBTAIN ALL PERMITS REQUIRED BY CITY, COUNTY, AND STATE AGENCIES PRIOR TO STARTING CONSTRUCTION OF UTILITY AND/OR CULVERTS WITHIN ROAD RIGHT-OF-WAYS.
B. CONTRACTOR SHALL ASSURE HIMSELF THAT ALL CONSTRUCTION PERMITS HAVE BEEN OBTAINED PRIOR TO COMMENCEMENT OF WORK. REQUIRED PERMITS THAT CAN ONLY BE ISSUED TO CONTRACTOR SHALL BE OBTAINED AT HIS EXPENSE.

5. SAFETY:

A. OBSERVE ALL FEDERAL, STATE, AND LOCAL SAFETY REGULATIONS WHEN WORKING IN OR NEAR PUBLIC ROAD RIGHT-OF-WAYS.
B. CONTRACTOR SHALL COMPLY WITH OSHA REGULATIONS AND STATE OF TEXAS LAWS CONCERNING EXCAVATION, TRENCHING, AND SHORING.

THE AREA OF THIS SURVEY IS IN FIRM 485470 0124E MAP REVISED JULY 5, 1993, ZONE A15 BFE 15.

SURVEYOR NOTES:
1) THIS PROPERTY DOES LIE WITHIN THE 100 YEAR FLOOD PLAIN AS ESTABLISHED BY THE FEDERAL EMERGENCY MANAGEMENT AGENCY.
2) THIS PROPERTY IS SUBJECT TO ANY RESTRICTIONS OF RECORD AND MAY BE SUBJECT TO SETBACKS FROM POWER LINES AS ESTABLISHED BY OSHA (CALL YOUR POWER COMPANY).
3) GRID BEARINGS BASED ON MONUMENTATION OF WEST R.O.W. LINE OF NOBLE CARL DRIVE.
4) ELEVATIONS ARE SHOWN IN FEET ABOVE MEAN SEA LEVEL NAVD '88 DATUM AS TIED TO NGS MONUMENT HGCSD 64.
5) SURVEYED WITHOUT BENEFIT OF A TITLE REPORT.

PAVING LEGEND

FF	FINISHED FLOOR
FG	FINISHED GRADE
TP	TOP OF PAVEMENT
TC	TOP OF CURB
TG	TOP OF GRATE
G	GUTTER
1.0%	PAVEMENT SLOPE
	PROPOSED 6" CONCRETE PAVING
	EXISTING FLOW ARROW
	PROPOSED FLOW ARROW
6	PROPOSED CONTOURS
6	EXISTING CONTOURS

COUNTY APPROVAL:
SIGNATURE _____ DATE _____

20 0 20 40 60 Feet
SCALE: 1"=20'

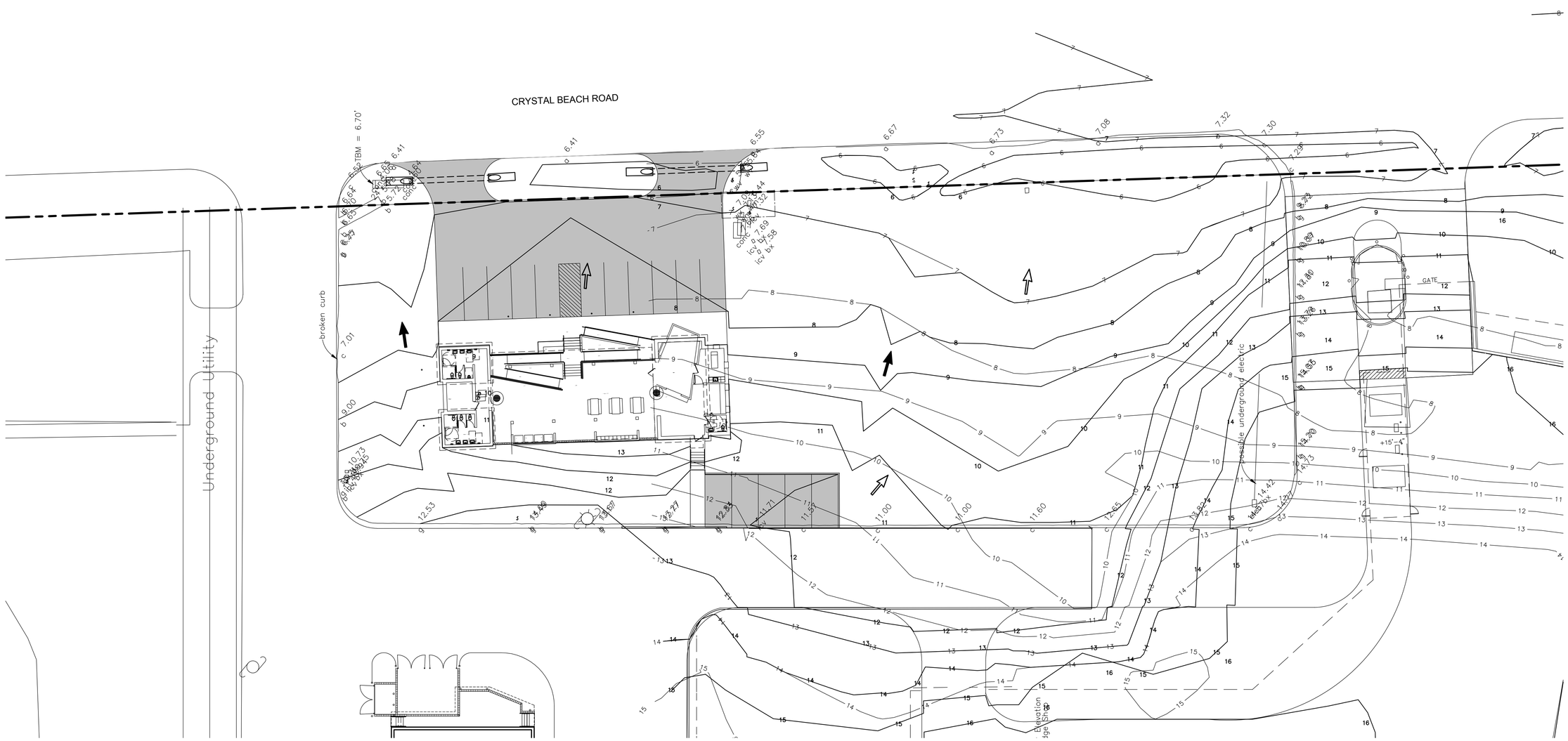

GALVESTON COUNTY BEACH PAVILION CRYSTAL BEACH, TX 77650

BE-Arc LLC Project No : C-13-007.01

SHELMARK ENGINEERING, L.L.C.
CIVIL | MARINE | PLANNING | STRUCTURAL
501 FM 517 ROAD EAST | DICKINSON, TEXAS 77539
TE FIRM NO. F-2113

INTERIM SUBMITTAL
DOCUMENT INTENDED FOR REVIEW ONLY. NOT ISSUED FOR CONSTRUCTION.

ENGINEER:
MARCUS J. MICHNA P.E.
REGISTRATION NO. 84739

DATE: 09/29/2017

DATE	REVISION

DESIGN DEVELOPMENT

DATE ISSUED:
9/29/2017

COPYRIGHT 2017
Project No: 17-217

C1.03

PAVING & DRAINAGE PLAN

COUNTY APPROVAL:
SIGNATURE _____ DATE_____

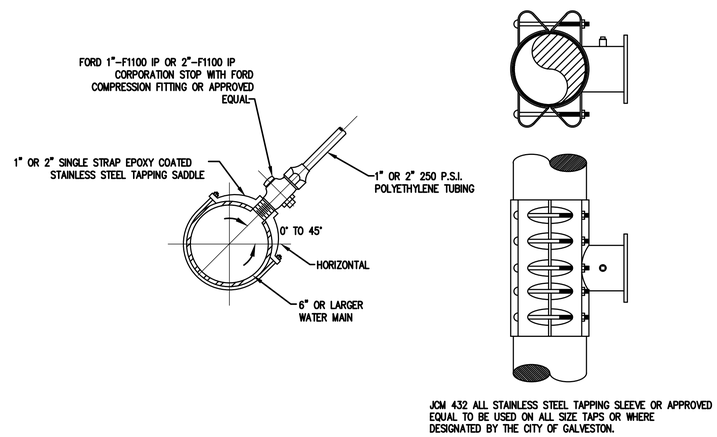

WATER TAP

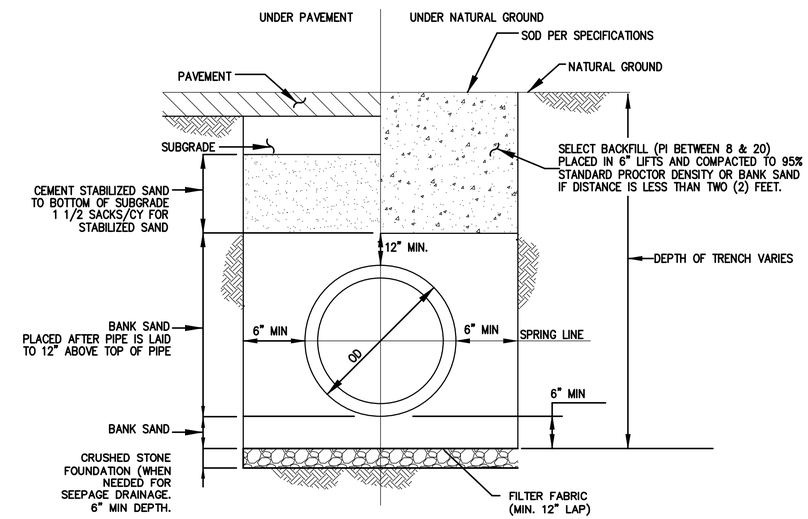

BEDDING AND BACKFILL FOR WET STABLE TRENCH

NOTE:
JETTING OR OPEN CUT FOR LONG SERVICE CONNECTIONS IS NOT PERMITTED ON LONG

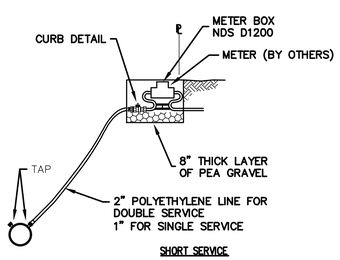

METER CONNECTION

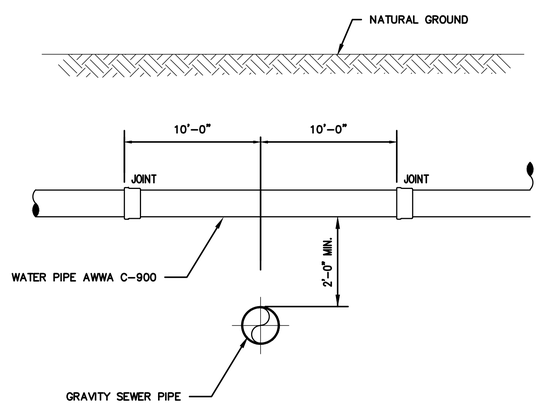

NOTE: ALL WATER LINE CONSTRUCTION SHALL COMPLY WITH SECTION 290-44 WATER DISTRIBUTION DESIGN AND STANDARDS OF THE WATER UTILITY RULES LAST REVISION, SET FORTH BY THE TCEQ.

WATER - SANITARY SEPERATIONS

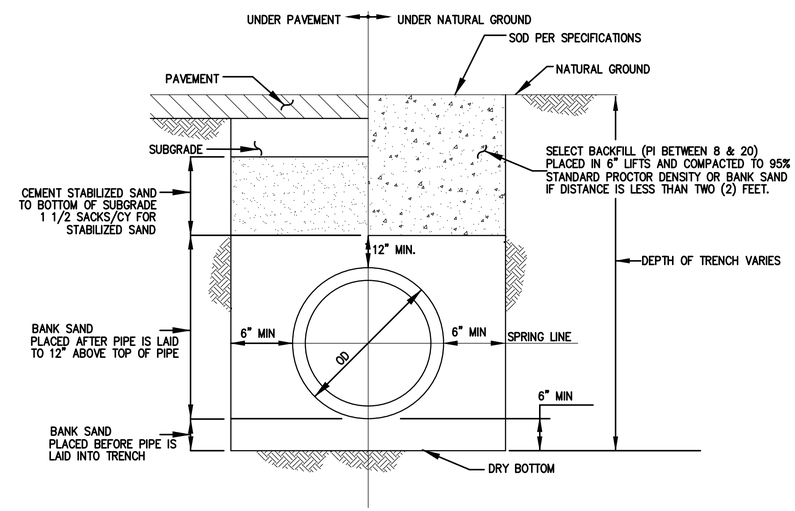

BEDDING AND BACKFILL FOR OPEN CUT

GALVESTON COUNTY
BEACH PAVILION
CRYSTAL BEACH, TX 77650

BE-Arc LLC Project No : C-13-007.01

SHELMARK ENGINEERING, L.L.C.
CIVIL | MARINE | PLANNING | STRUCTURAL
501 FM 517 ROAD EAST | DICKINSON, TEXAS 77539
TX FIRM NO. F-2113

INTERIM SUBMITTAL
DOCUMENT INTENDED FOR REVIEW ONLY. NOT ISSUED FOR CONSTRUCTION.

ENGINEER:
MARCUS J. MICHNA P.E.
REGISTRATION NO. 84739

DATE: 09/29/2017

DATE	REVISION

DESIGN DEVELOPMENT

DATE ISSUED:
9/29/2017

COPYRIGHT 2017
Project No: 17-217

C2.01

WATER DETAILS

COUNTY APPROVAL:
SIGNATURE _____ DATE_____

NOTES:
1. MIN TRENCH WIDTH SHALL BE PIPE OD PLUS MIN 12".
2. MAX TRENCH WIDTH SHALL NOT BE GREATER THAN MIN TRENCH WIDTH PLUS 24", UNLESS OTHERWISE NOTED.

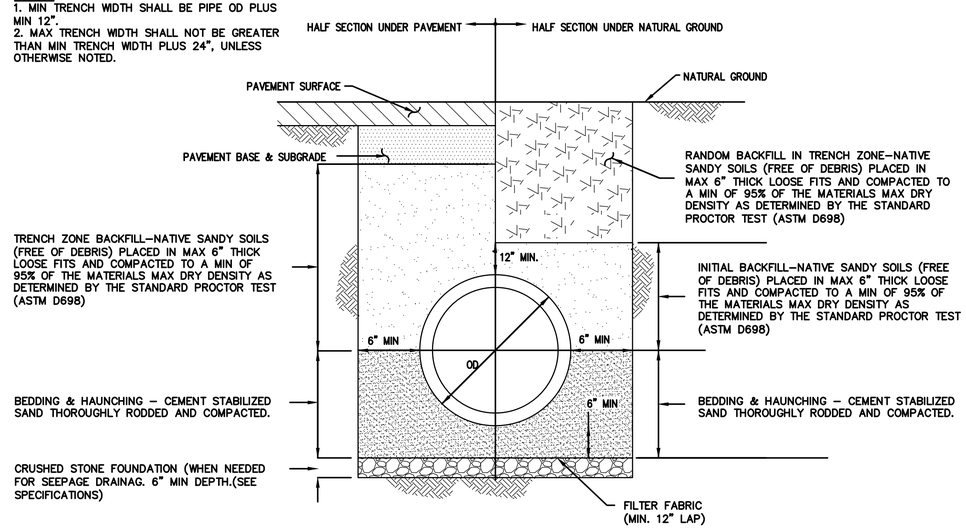

BEDDING AND BACKFILL FOR WET STABLE TRENCH

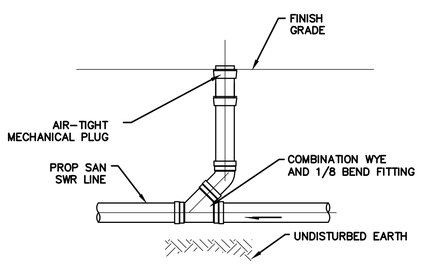

IN-LINE SANITARY CLEANOUT

NOTES:
1. THIS DETAIL MAY BE USED ONLY FOR DRY STABLE TRENCH CONDITIONS.
2. MIN TRENCH WIDTH SHALL BE PIPE OD PLUS MIN 12".
3. MAX TRENCH WIDTH SHALL NOT BE GREATER THAN MIN TRENCH WIDTH PLUS 24", UNLESS OTHERWISE NOTED.

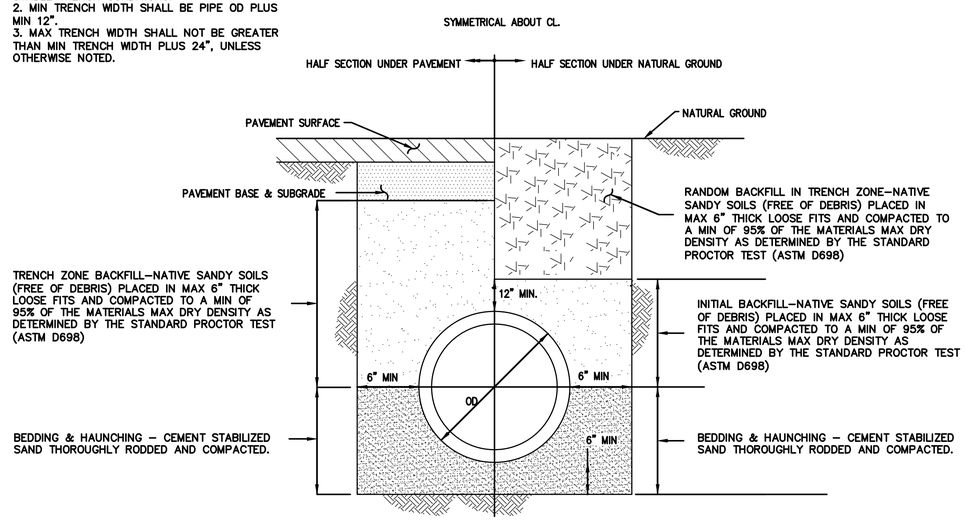

BEDDING AND BACKFILL FOR WET STABLE TRENCH

GALVESTON COUNTY
BEACH PAVILION
CRYSTAL BEACH, TX 77650

BE–Arc LLC Project No : C–13–007.01

SHELMARK ENGINEERING, L.L.C.
CIVIL | MARINE | PLANNING | STRUCTURAL
501 FM 517 ROAD EAST | DICKINSON, TEXAS 77539
TX FIRM NO. F-2113

INTERIM SUBMITTAL
DOCUMENT INTENDED FOR REVIEW ONLY. NOT ISSUED FOR CONSTRUCTION.

ENGINEER:
MARCUS J. MICHNA P.E.
REGISTRATION NO. 84739

DATE: 09/29/2017

DATE	REVISION

DESIGN DEVELOPMENT

DATE ISSUED:
9/29/2017

COPYRIGHT 2017
Project No: 17–217

C2.02

SANITARY DETAILS

COUNTY APPROVAL:
SIGNATURE _____ DATE_____

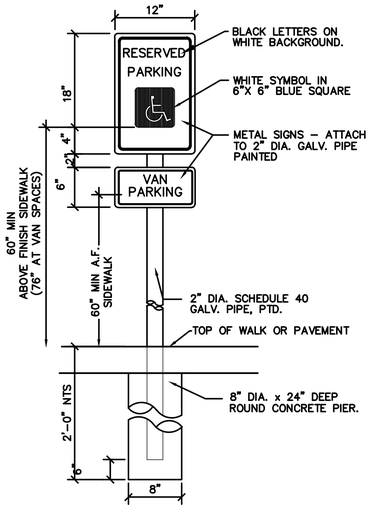

ADA SIGN

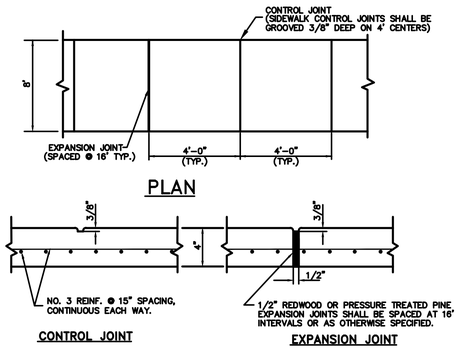

NOTES:
1. ALL EDGES SHALL BE ROUNDED WITH 3/8" RADIUS.
2. CONTROL JOINTS SHALL BE SPACED AT 4'-0" INTERVALS.
3. CONTROL JOINTS SHALL BE 3/8" DEEP AND TROWEL EDGE.
4. 1/2" EXPANSION MATERIAL REQUIRED WHERE SIDEWALKS ABUT BUILDINGS, CURBS, DRIVEWAYS, OR EXISTING SIDEWALKS.
5. EXPANSION JOINTS SHALL BE SPACED AT 16 FT. INTERVALS TYPICALLY.
6. WHERE NEW SIDEWALK IS PLACED AGAINST EXISTING SIDEWALK, SAWCUT EXISTING SIDEWALK TO AN EVEN STRAIGHT LINE PRIOR TO INSTALLATION

SIDEWALK

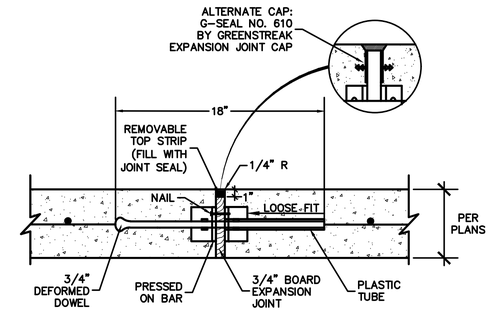

NOTE:
DOWEL END NEEDS TO BE CLEANED AND LUBRICATED WITH APPROVED PRODUCT PRIOR TO INSERTION OF PLASTIC TUBE.

EXPANSION JOINT

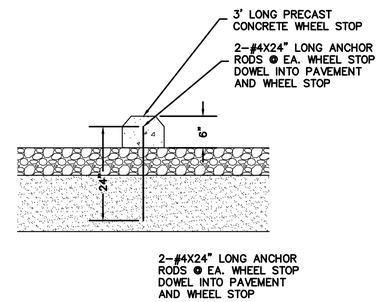

CONCRETE WHEEL STOP

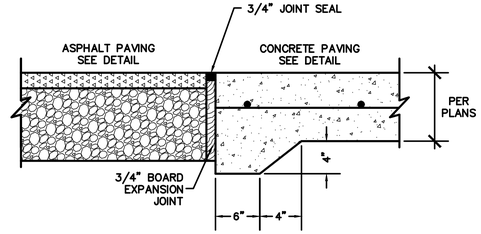

ASPHALT TIE-IN

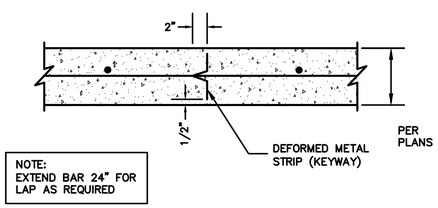

NOTE:
EXTEND BAR 24" FOR LAP AS REQUIRED

CONTROL JOINT

NOTE:
HANDICAPPED PARKING SPACES AND ACCESS AISLES SHALL BE LEVEL WITH SURFACE SLOPES NOT EXCEEDING 1:50 (2%) IN ALL DIRECTIONS.

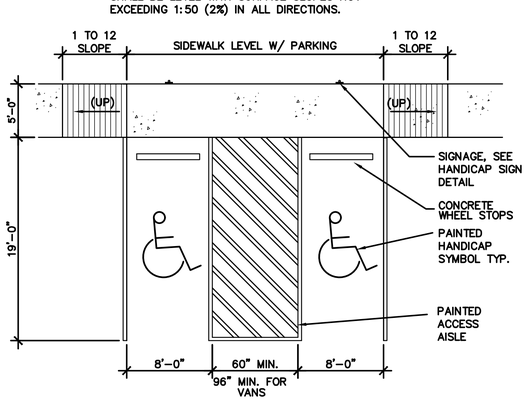

ADA PARKING SPACE

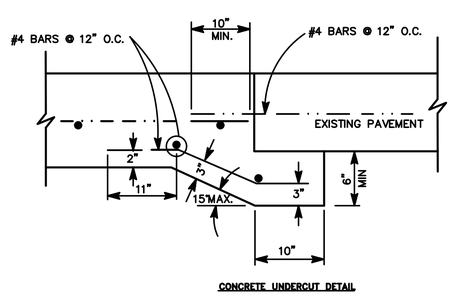

CONCRETE TIE-IN

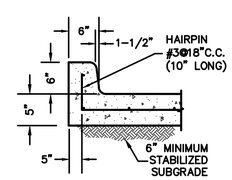

NOTES:
1. MORTAR FINISH NOT REQUIRED WHEN CURB IS POURED BY CURB MACHINE. CURB SHALL HAVE THE SAME OUTSIDE DIMENSIONS.
2. EXPANSION JOINTS SHALL BE INSTALLED AT ALL PAVEMENT EXPANSION JOINTS.

6 INCH CURB

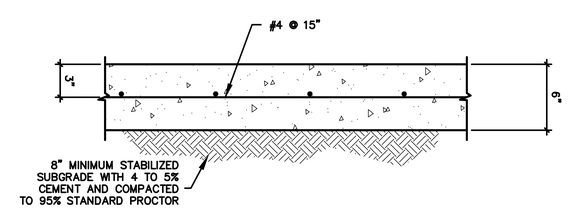

CONCRETE PAVEMENT

GALVESTON COUNTY
BEACH PAVILION
CRYSTAL BEACH, TX 77650

BE-Arc LLC Project No : C-13-007.01

SHELMARK ENGINEERING, L.L.C.
CIVIL | MARINE | PLANNING | STRUCTURAL
501 FM 517 ROAD EAST | DICKINSON, TEXAS 77539
TX FIRM NO. F-2113

INTERIM SUBMITTAL
DOCUMENT INTENDED FOR REVIEW ONLY. NOT ISSUED FOR CONSTRUCTION.

ENGINEER:
MARCUS J. MICHNA P.E.
REGISTRATION NO. 84739

DATE: 09/29/2017

DATE	REVISION

DESIGN DEVELOPMENT

DATE ISSUED:
9/29/2017

COPYRIGHT 2017
Project No: 17-217

C2.03

PAVING DETAILS

COUNTY APPROVAL:
SIGNATURE _____ DATE_____

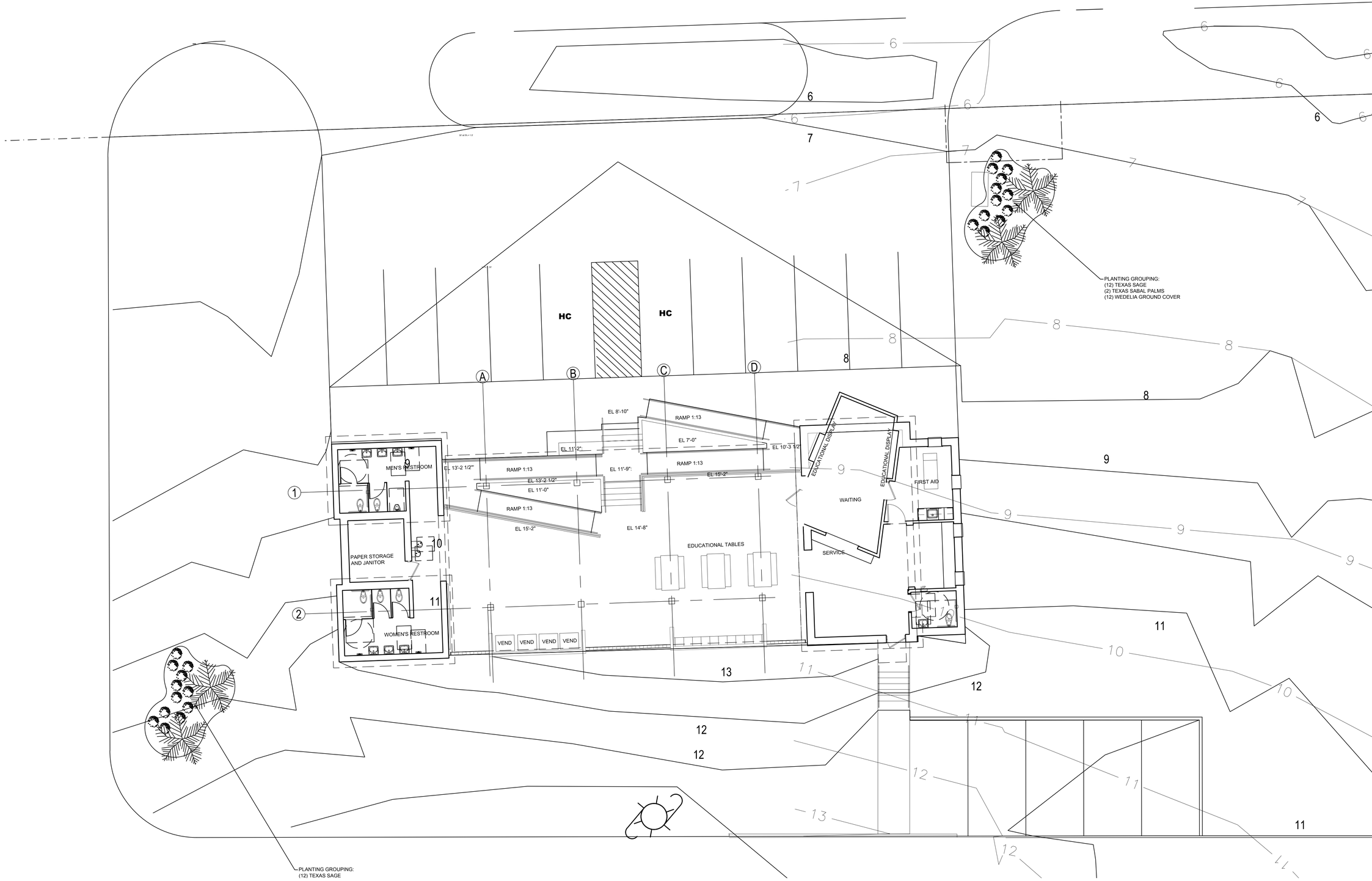

SITE PLAN 1/8" = 1'-0" | 1

GALVESTON COUNTY
BEACH PAVILION
CRYSTAL BEACH, TX 77650

BE–Arc LLC Project No : C–17–003.01

BRAX EASTERWOOD DESIGN
architecture + planning

BRAX EASTERWOOD
DESIGN
2728 AVENUE Q SUITE 2
GALVESTON TEXAS 77550
PHONE 409–534–8976
EASTERWOOD@BEAIA.COM

INTERIM REVIEW

ARCHITECT # 19694

SEAL

DATE	REVISION

DESIGN DEVELOPMENT

DATE ISSUED:
9/29/2017

COPYRIGHT 2017

A0.1

SITE PLAN

COUNTY APPROVAL:
SIGNATURE _____ DATE_____

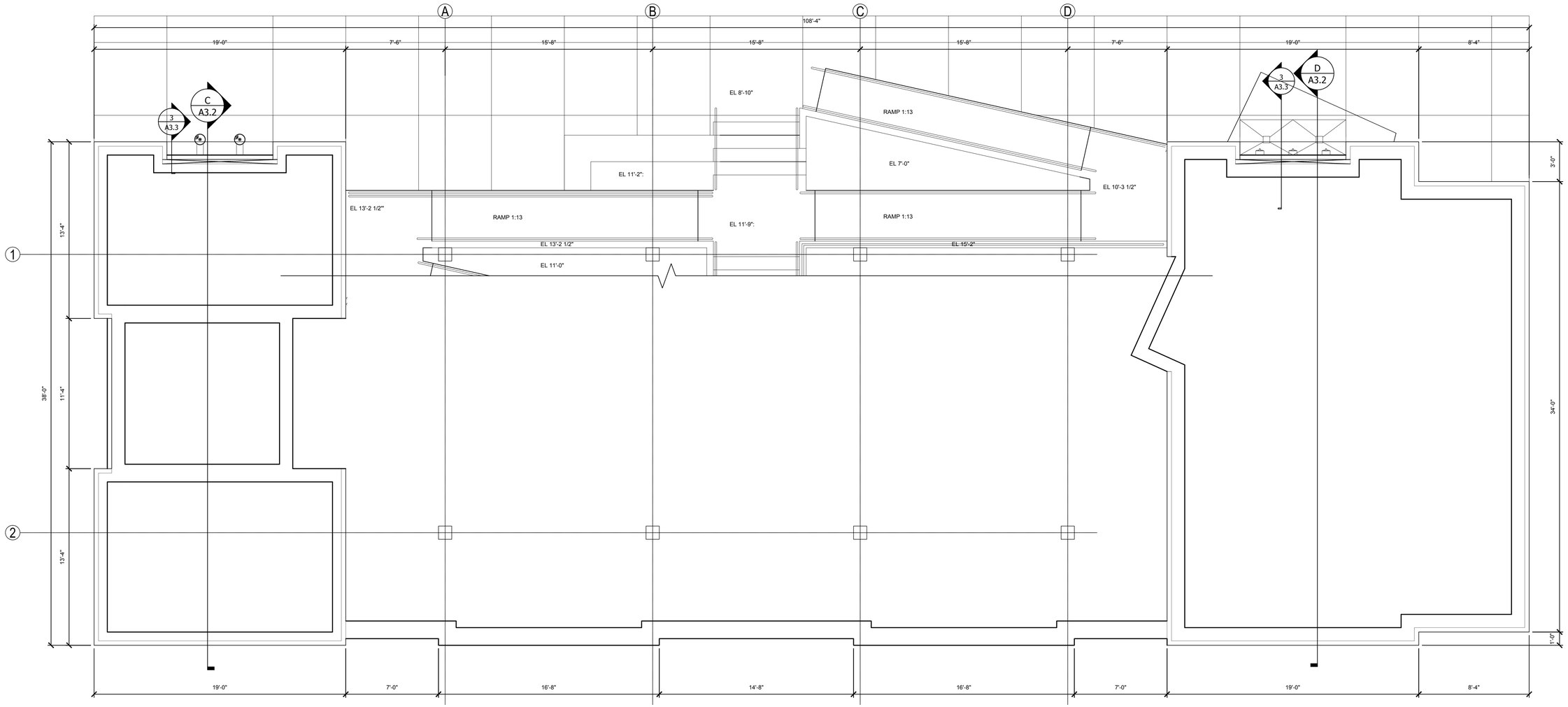

LOWER LEVEL FLOOR PLAN

1/4" = 1'-0" | **1**

GALVESTON COUNTY
BEACH PAVILION
CRYSTAL BEACH, TX 77650

BE–Arc LLC Project No : C–17–003.01

BRAX EASTERWOOD DESIGN
architecture + planning

BRAX EASTERWOOD
DESIGN
2728 AVENUE Q SUITE 2
GALVESTON TEXAS 77550
PHONE 409–354–8976
EASTERWOOD@BEAIA.COM

INTERIM REVIEW

ARCHITECT # 19694

SEAL

DATE	REVISION

DESIGN DEVELOPMENT

DATE ISSUED:
9/29/2017

COPYRIGHT 2017

A1.0

FLOOR PLAN

COUNTY APPROVAL:
SIGNATURE _____ DATE_____

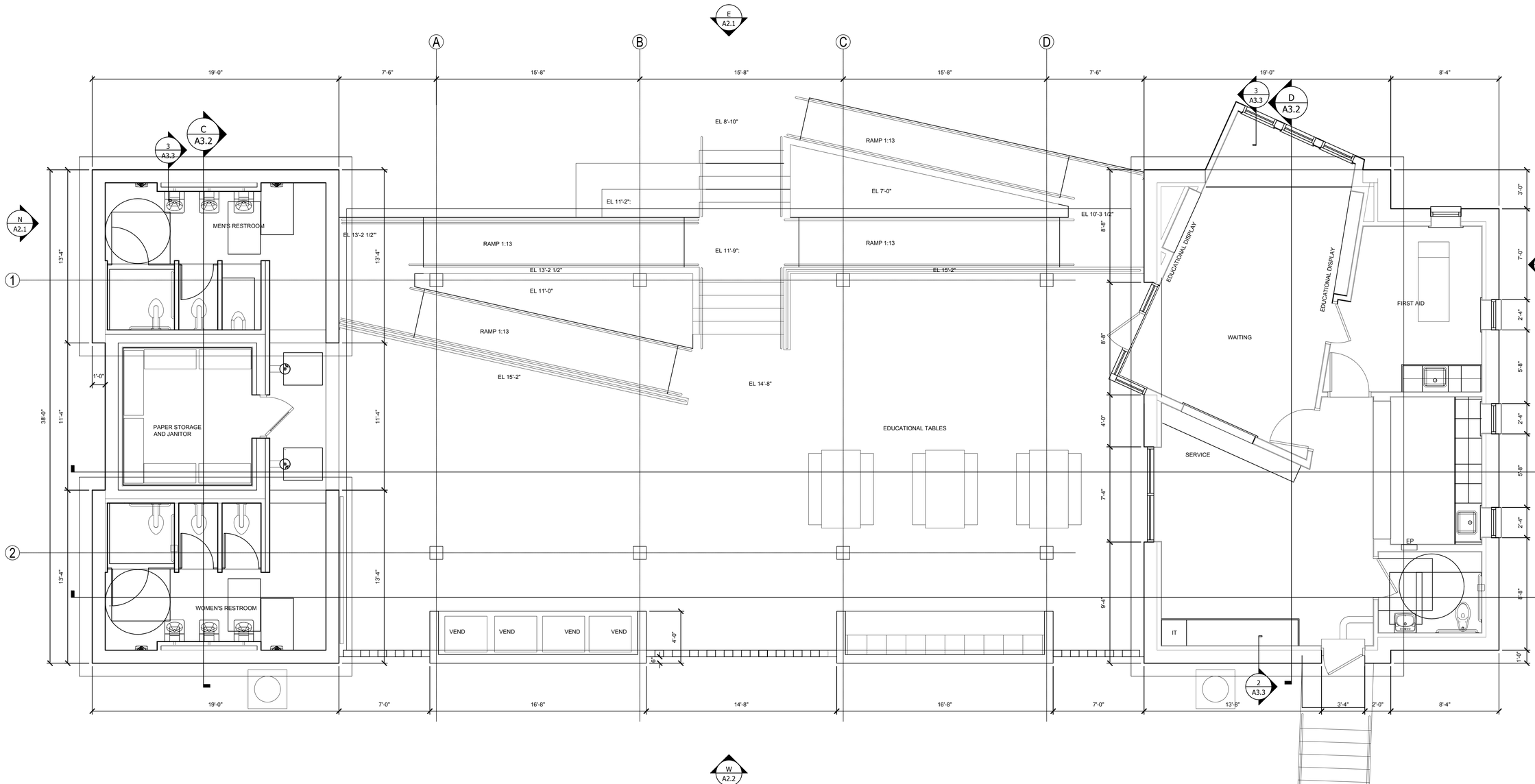

UPPER LEVEL FLOOR PLAN

1/4" = 1'-0" | 1

FLOOR PLAN

GALVESTON COUNTY
BEACH PAVILION
CRYSTAL BEACH, TX 77650

BE–Arc LLC Project No : C–17–003.01

BRAX EASTERWOOD DESIGN
architecture + planning

BRAX EASTERWOOD
DESIGN
2728 AVENUE Q SUITE 2
GALVESTON TEXAS 77550
PHONE 409-534-8976
EASTERWOOD@BEAIA.COM

INTERIM REVIEW

ARCHITECT # 19694

SEAL

DATE	REVISION

DESIGN DEVELOPMENT

DATE ISSUED:
9/29/2017

COPYRIGHT 2017

A1.1

COUNTY APPROVAL:
SIGNATURE _____ DATE_____

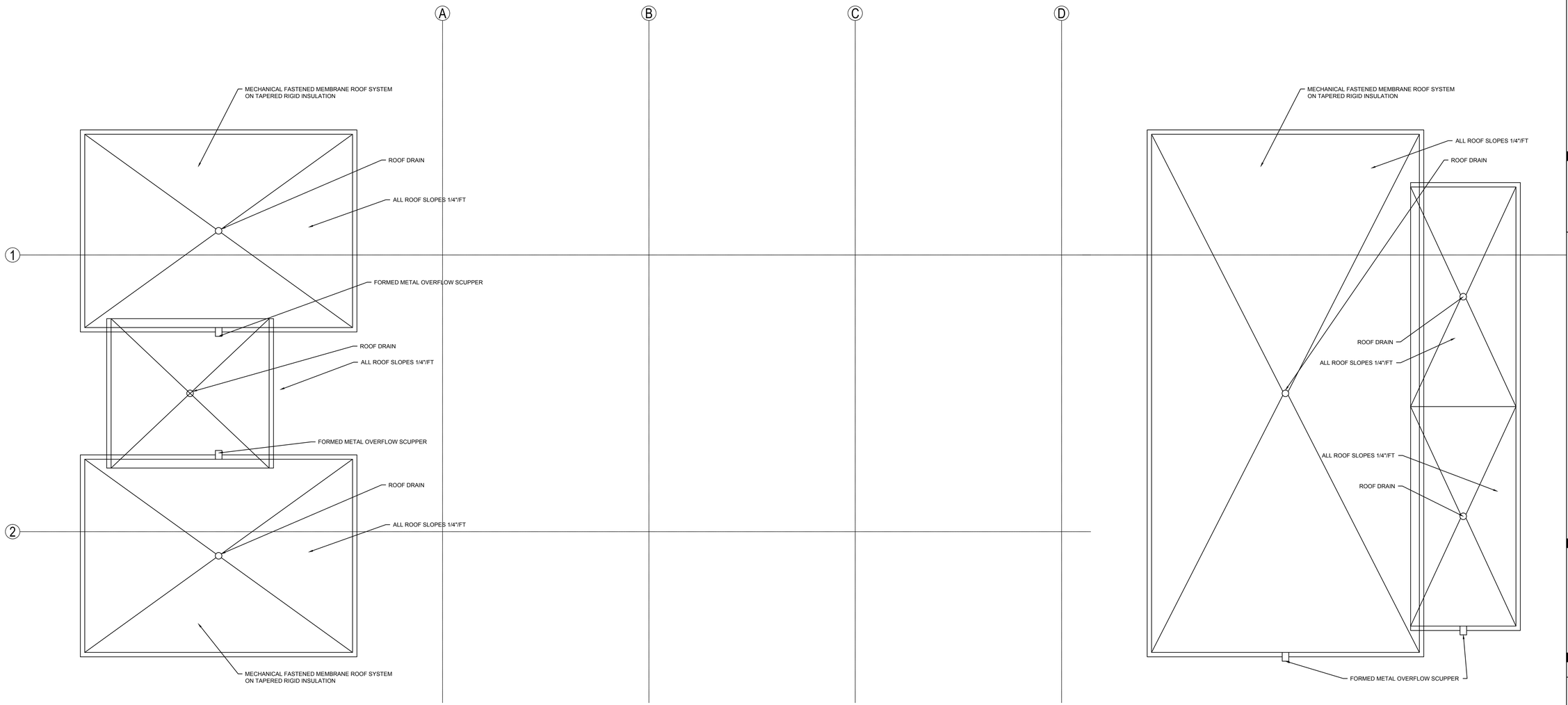

GALVESTON COUNTY
BEACH PAVILION
CRYSTAL BEACH, TX 77650

BE–Arc LLC Project No : C–17–003.01

BRAX EASTERWOOD DESIGN
architecture + planning

BRAX EASTERWOOD
DESIGN
2728 AVENUE Q SUITE 2
GALVESTON TEXAS 77550
PHONE 409–354–8976
EASTERWOOD@BEAIA.COM

INTERIM REVIEW

ARCHITECT # 19694

SEAL

DATE	REVISION

DESIGN DEVELOPMENT

DATE ISSUED:
9/29/2017

COPYRIGHT 2017

A1.3

ROOF PLAN 1/4" = 1'–0" **1** ROOF PLAN

COUNTY APPROVAL:
SIGNATURE _____ DATE_____

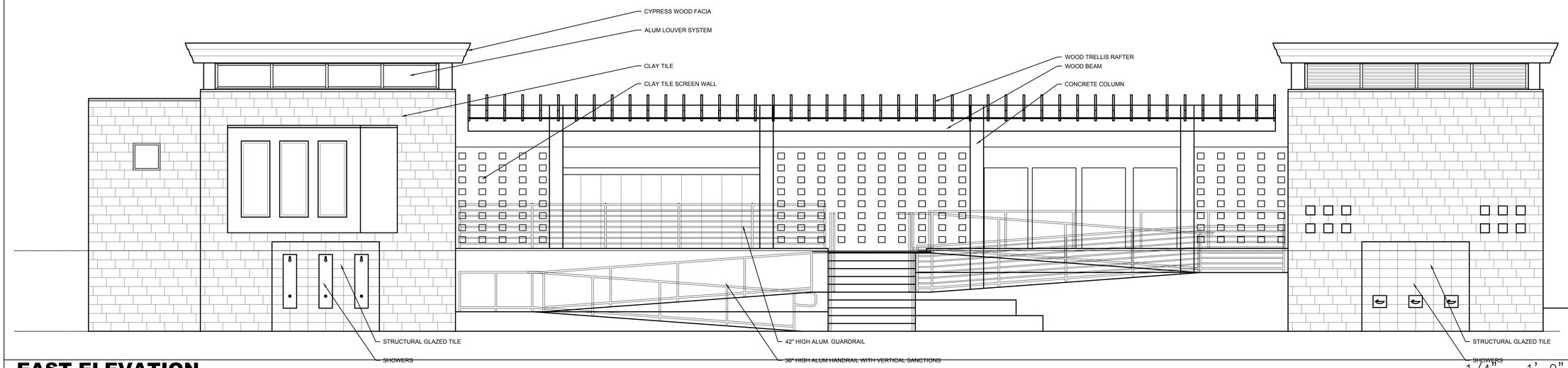

EAST ELEVATION

1/4" = 1'-0" | E

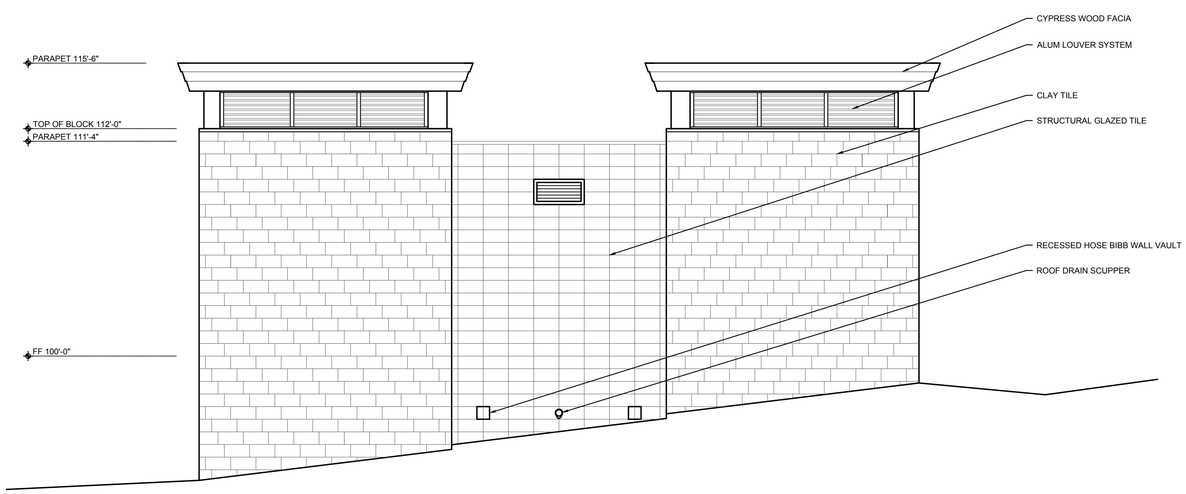

NORTH ELEVATION

1/4" = 1'-0" | N

GALVESTON COUNTY BEACH PAVILION CRYSTAL BEACH, TX 77650

BE-Arc LLC Project No : C-17-003.01

BRAX EASTERWOOD DESIGN
architecture + planning

BRAX EASTERWOOD
DESIGN
2728 AVENUE Q SUITE 2
GALVESTON TEXAS 77550
PHONE 409-354-8976
EASTERWOOD@BEAIA.COM

INTERIM REVIEW

ARCHITECT # 19694

SEAL

DATE	REVISION

DESIGN DEVELOPMENT

DATE ISSUED:
9/29/2017

COPYRIGHT 2017

A2.1

ELEVATIONS

COUNTY APPROVAL:
SIGNATURE _____ DATE_____

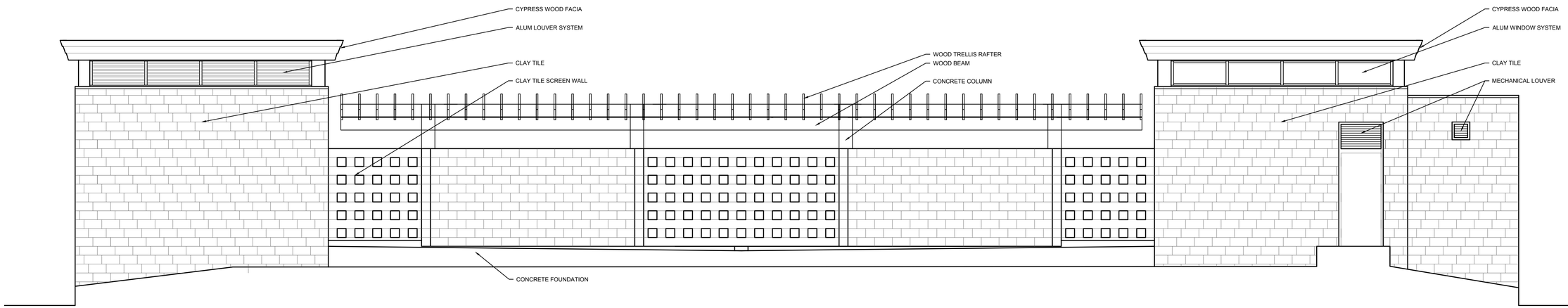

WEST ELEVATION 1/4" = 1'-0" **W**

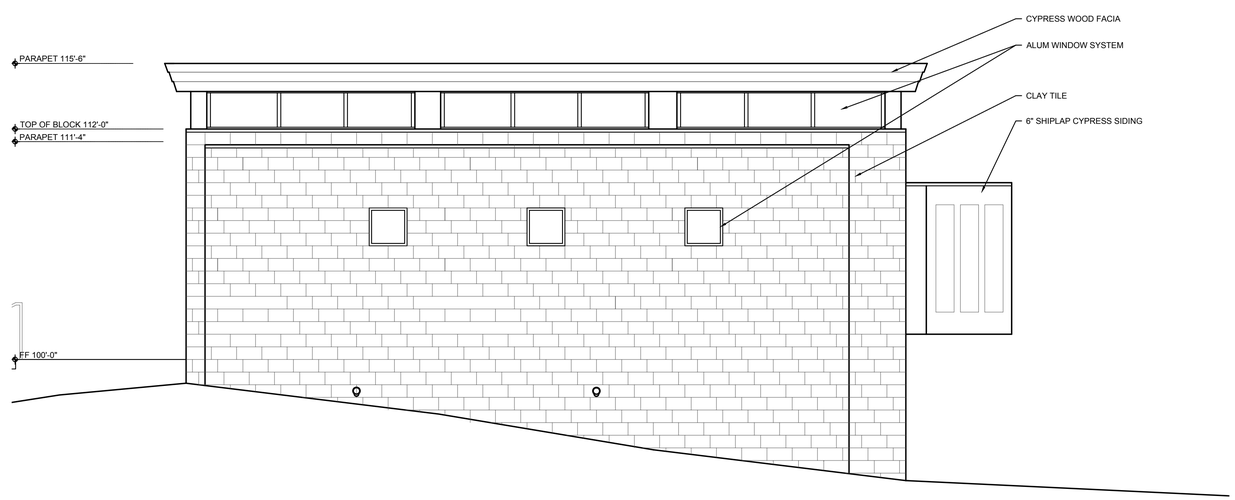

SOUTH ELEVATION 1/4" = 1'-0" **S**

GALVESTON COUNTY
BEACH PAVILION
CRYSTAL BEACH, TX 77650

BE-Arc LLC Project No : C-17-003.01

BRAX EASTERWOOD DESIGN
architecture + planning

BRAX EASTERWOOD
DESIGN
2728 AVENUE Q SUITE 2
GALVESTON TEXAS 77550
PHONE 409-354-8976
EASTERWOOD@BEAIA.COM

INTERIM REVIEW

ARCHITECT # 19694

SEAL

DATE	REVISION

DESIGN DEVELOPMENT

DATE ISSUED:
9/29/2017

COPYRIGHT 2017

A2.2

ELEVATIONS

COUNTY APPROVAL:
SIGNATURE _____ DATE_____

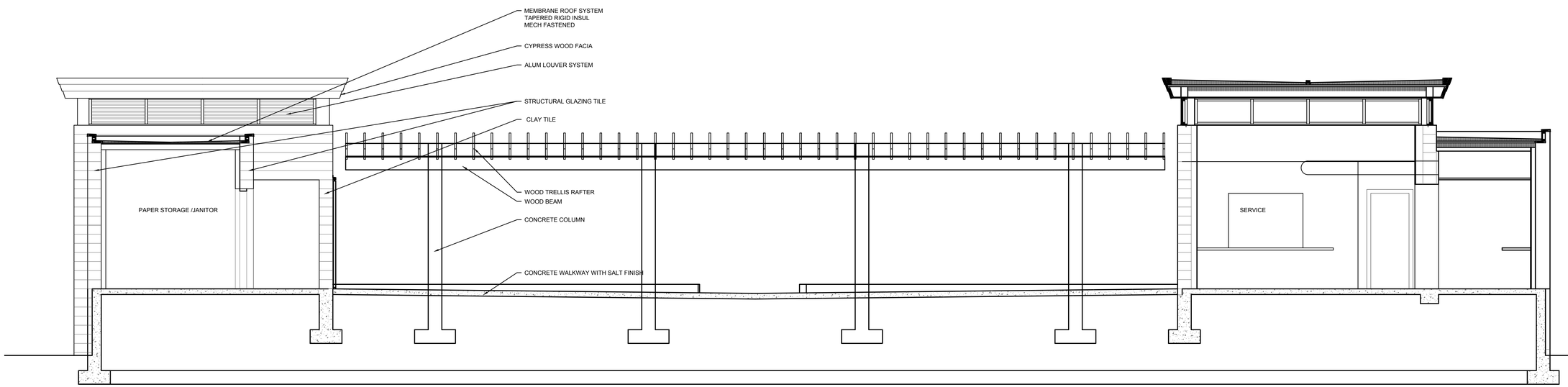

BUILDING SECTION 1/4" = 1'-0" **B**

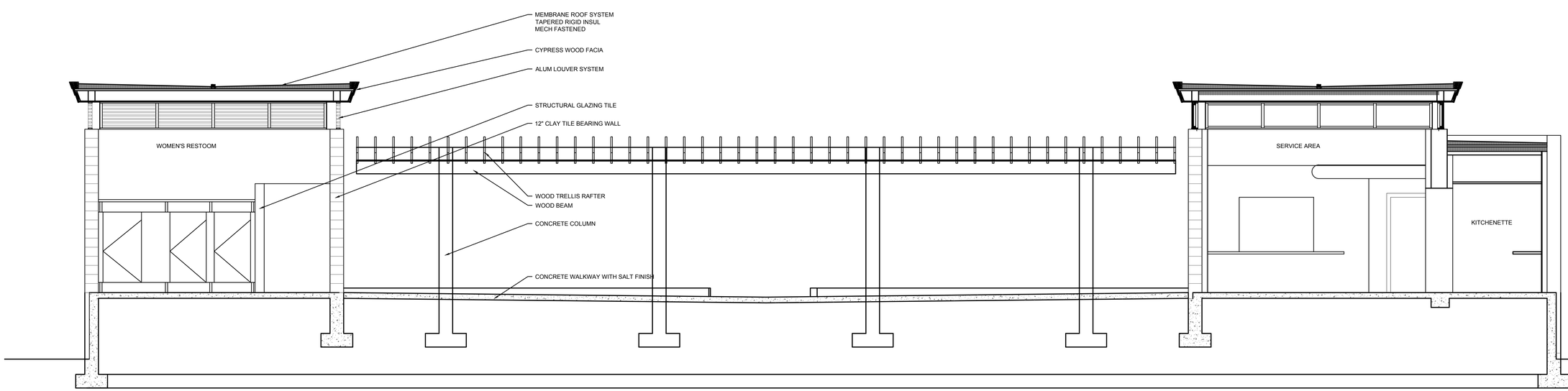

BUILDING SECTION 1/4" = 1'-0" **A**

GALVESTON COUNTY
BEACH PAVILION
CRYSTAL BEACH, TX 77650

BE-Arc LLC Project No : C-17-003.01

BRAX EASTERWOOD DESIGN
architecture + planning

BRAX EASTERWOOD
DESIGN
2728 AVENUE Q SUITE 2
GALVESTON TEXAS 77550
PHONE 409-354-6976
EASTERWOOD@BEAIA.COM

INTERIM REVIEW

ARCHITECT # 19694

SEAL

DATE	REVISION

DESIGN DEVELOPMENT

DATE ISSUED:
9/29/2017

COPYRIGHT 2017

A3.1

SECTIONS

COUNTY APPROVAL:
SIGNATURE _____ DATE_____

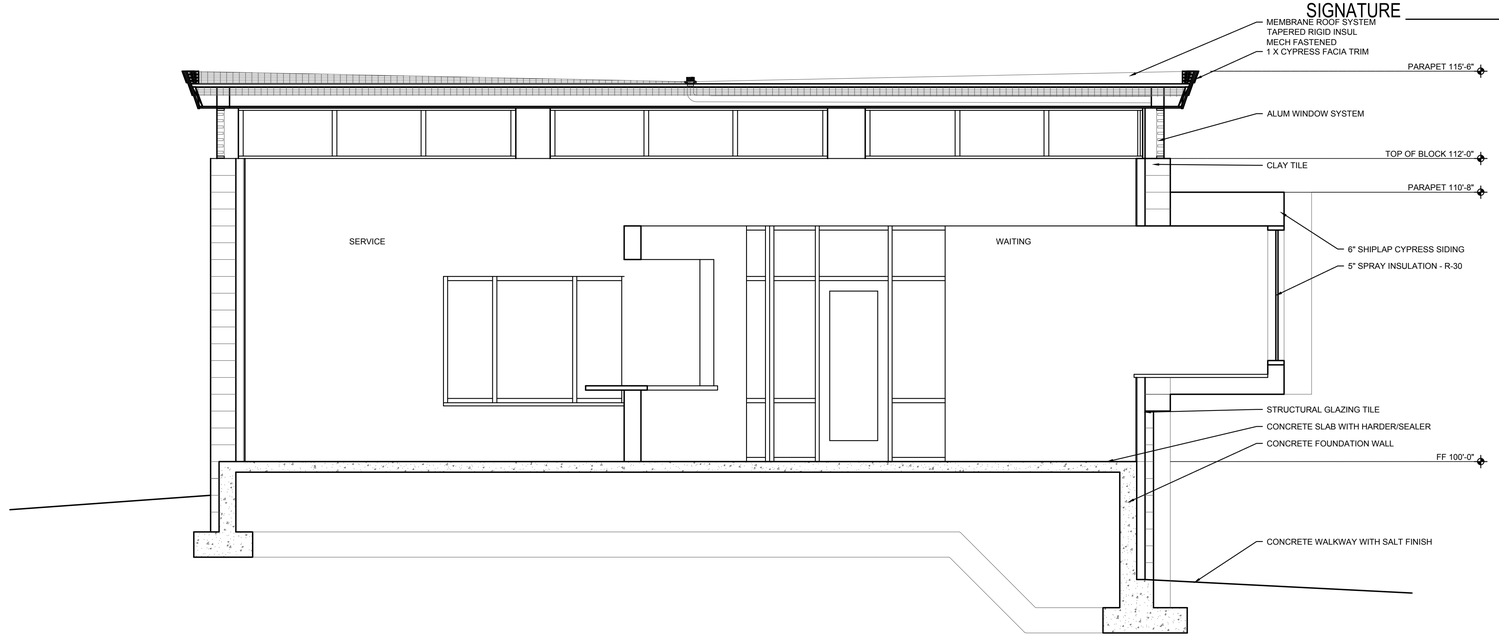

BUILDING SECTION 3/8" = 1'-0" **D**

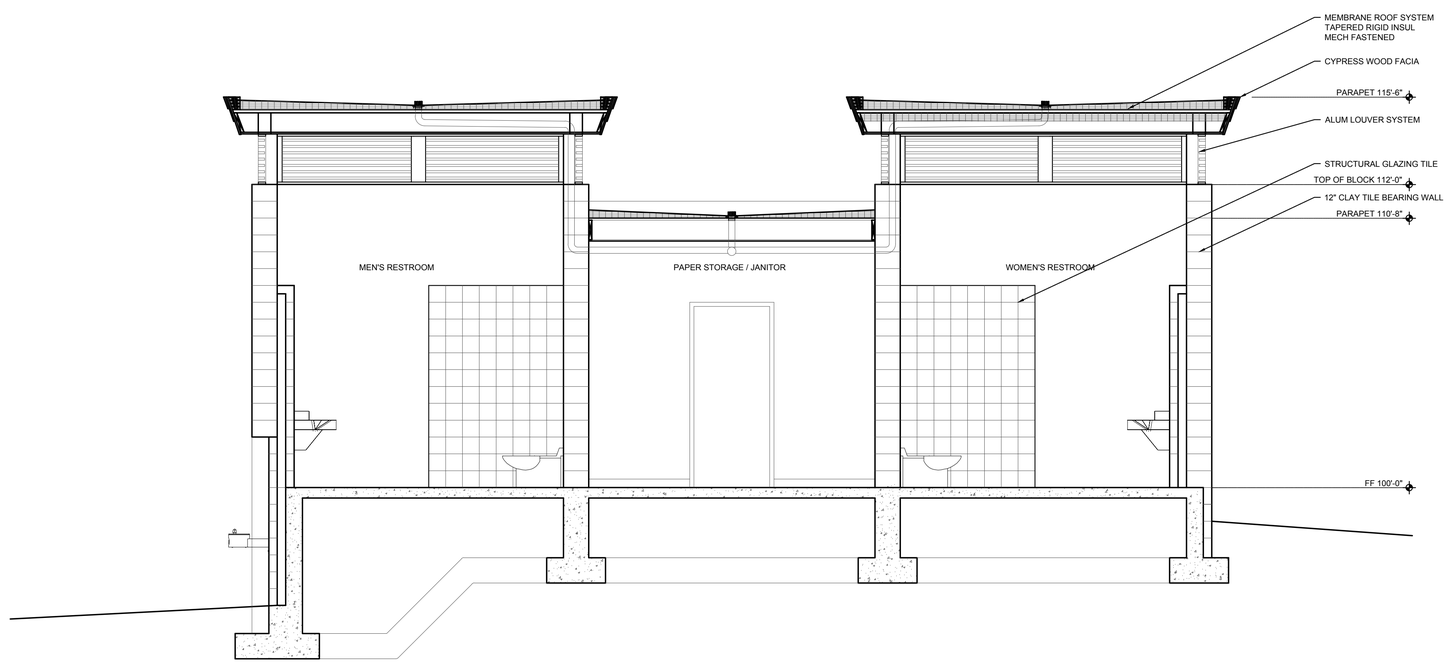

BUILDING SECTION 3/8" = 1'-0" **C**

GALVESTON COUNTY
BEACH PAVILION
CRYSTAL BEACH, TX 77650

BE-Arc LLC Project No : C-17-003.01

BRAX EASTERWOOD DESIGN
architecture + planning

BRAX EASTERWOOD
DESIGN
2728 AVENUE Q SUITE 2
GALVESTON TEXAS 77550
PHONE 409-354-6976
EASTERWOOD@BEAIA.COM

INTERIM REVIEW

ARCHITECT # 19694

SEAL

DATE	REVISION

DESIGN DEVELOPMENT

DATE ISSUED:
9/29/2017

COPYRIGHT 2017

A3.2

SECTIONS

COUNTY APPROVAL:
SIGNATURE _____ DATE_____

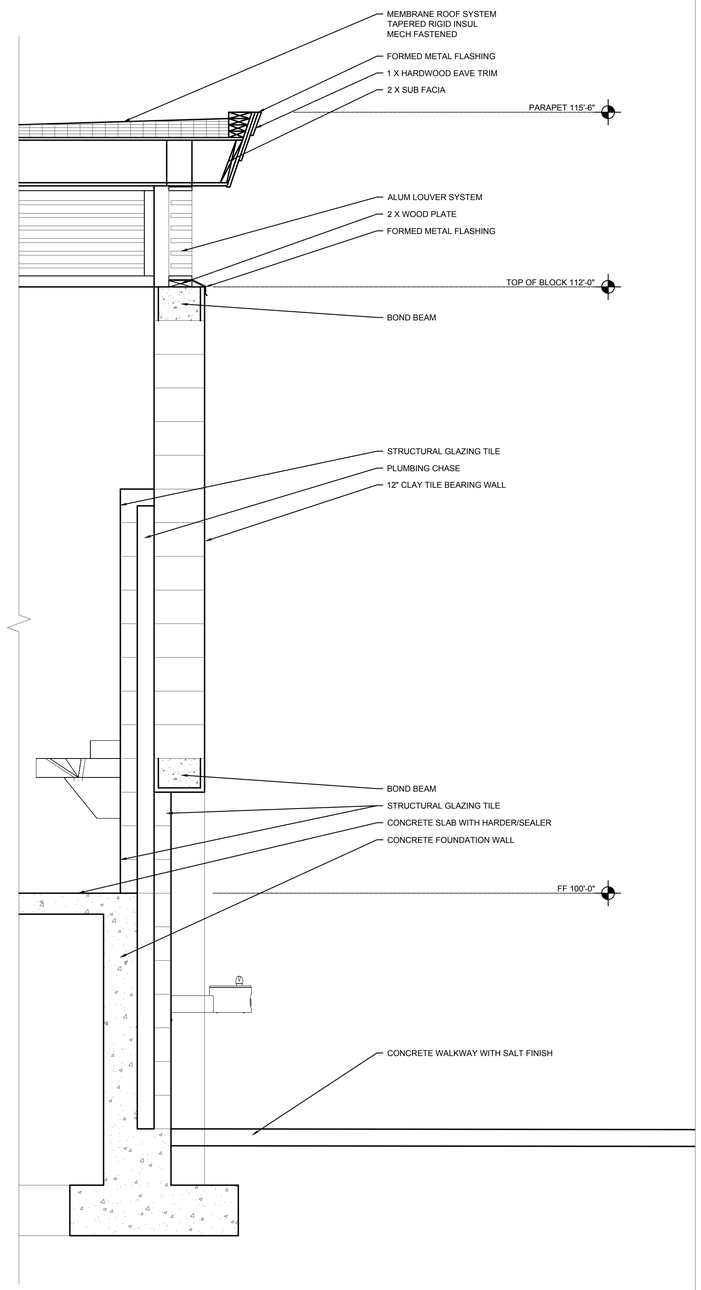

WALL SECTION 3/4" = 1'-0" **3**

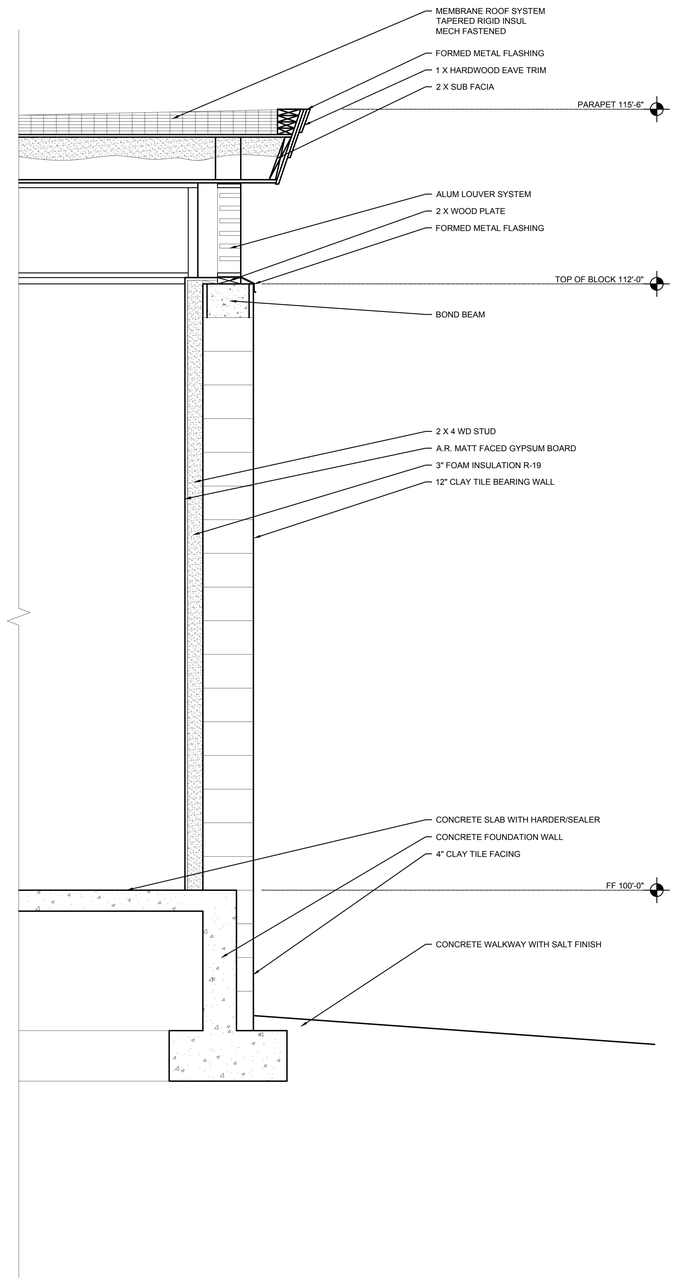

WALL SECTION 3/4" = 1'-0" **2**

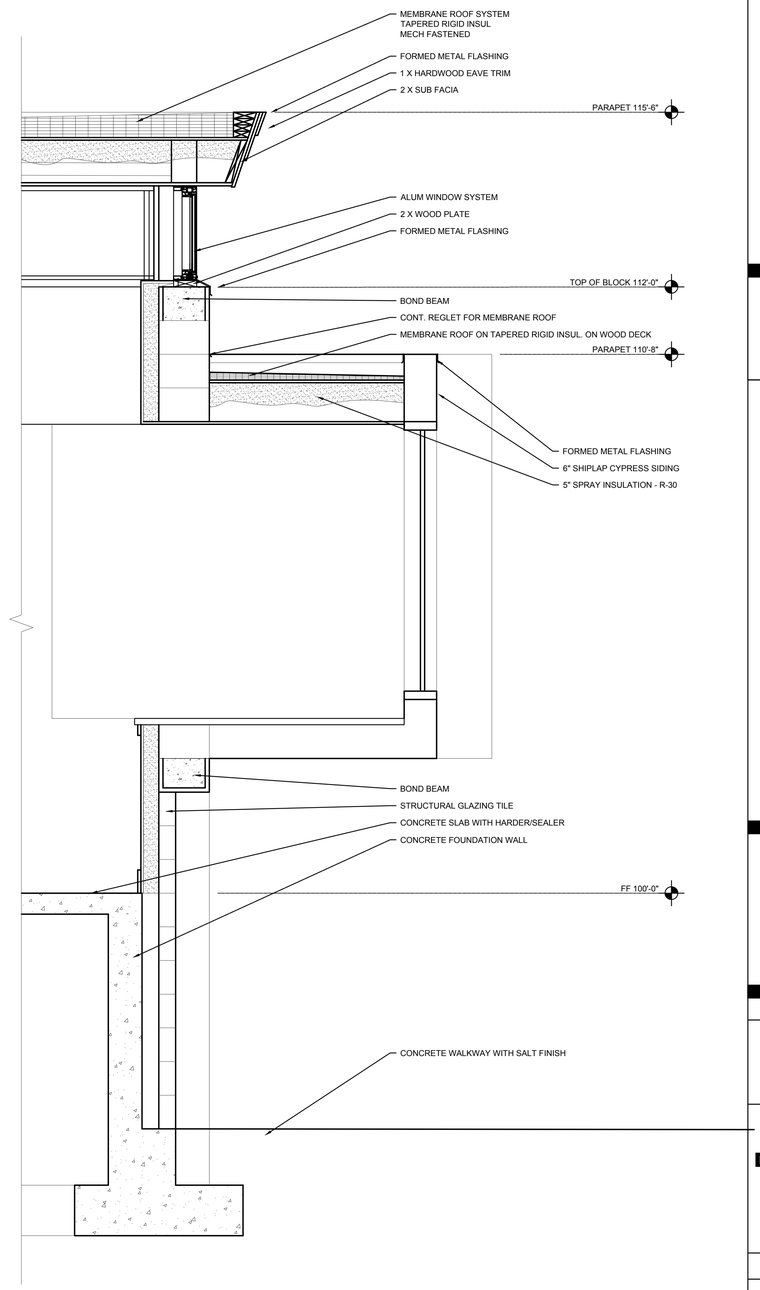

WALL SECTION 3/4" = 1'-0" **1**

GALVESTON COUNTY BEACH PAVILION CRYSTAL BEACH, TX 77650

BE–Arc LLC Project No : C–17–003.01

BRAX EASTERWOOD DESIGN
architecture • planning

BRAX EASTERWOOD
DESIGN
2728 AVENUE Q SUITE 2
GALVESTON TEXAS 77550
PHONE 409-354-8976
EASTERWOOD@BEAIA.COM

INTERIM REVIEW

ARCHITECT # 19694

SEAL

DATE	REVISION

DESIGN DEVELOPMENT

DATE ISSUED:
9/29/2017

COPYRIGHT 2017

A3.3

SECTIONS

COUNTY APPROVAL:
SIGNATURE _____ DATE_____

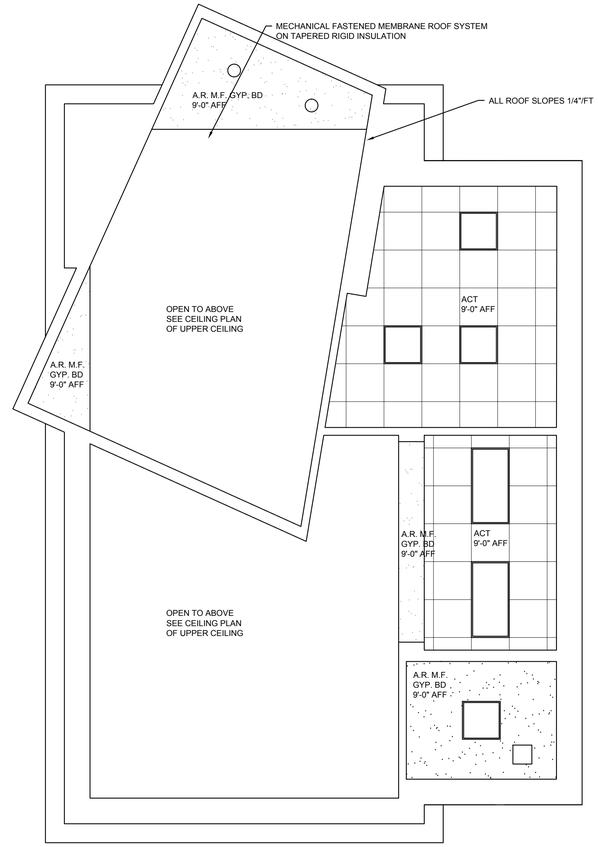

LOWER CEILING PLAN

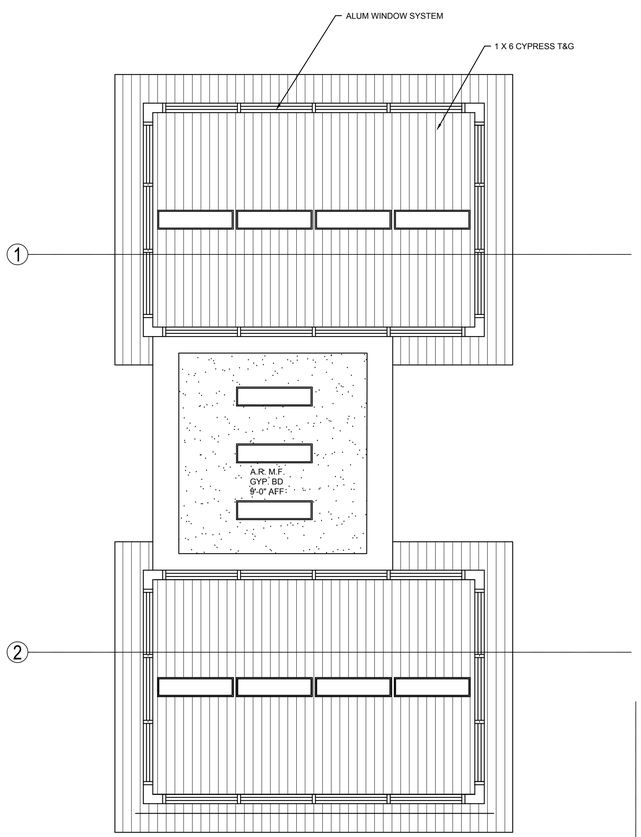

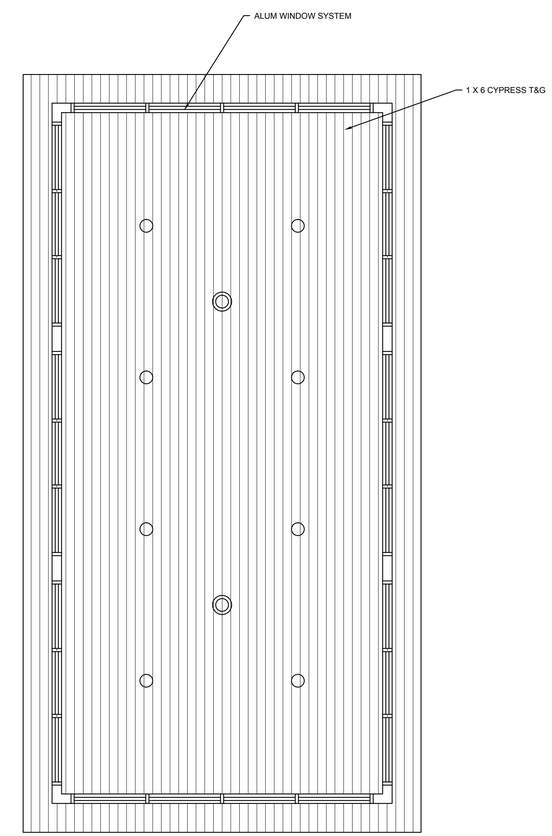

UPPER CEILING PLAN

REFLECTED CEILING PLAN

1/4" = 1'-0" | 1

GALVESTON COUNTY
BEACH PAVILION
CRYSTAL BEACH, TX 77650

BE-Arc LLC Project No : C-17-003.01

BRAX EASTERWOOD DESIGN
architecture + planning

BRAX EASTERWOOD
DESIGN
2728 AVENUE Q SUITE 2
GALVESTON TEXAS 77550
PHONE 409-354-8976
EASTERWOOD@BEAIA.COM

INTERIM REVIEW

ARCHITECT # 19694

SEAL

DATE	REVISION

DESIGN DEVELOPMENT

DATE ISSUED:
9/29/2017

COPYRIGHT 2017

A9.1

REFLECTED CEILING PLAN

DESIGN DATA GOVERNING BUILDING CODE:
"INTERNATIONAL BUILDING CODE – 2012"

DESIGN LOADS:

WIND LOAD (ACSE 7–10)

ULTIMATE DESIGN WIND SPEED..... 3 SEC. GUST = 149 MPH
RISK CATEGORY..... II HIGH
WIND EXPOSURE..... C
ENCLOSURE CLASSIFICATION..... CLOSED

LIVE LOADS: (IBC 2012)

ROOF FRAMING..... 20.00 PSF

SNOW LOAD:

GROUND SNOW LOAD, PG (PSF)..... 0.00

FLOOD LOADS:

ZONE.....A15
BASE FLOOD ELEVATION (MSL).....15.0'

PROJECT NOTES

A. GENERAL:

1. NOTES ON THIS PAGE SUPPLEMENT THE SPECIFICATIONS, REFER TO SPECIFICATIONS FOR ADDITIONAL REQUIREMENTS.
2. ENGINEERS APPROVAL MUST BE SECURED FOR ALL SUBSTITUTIONS.
3. CHECK ALL DIMENSIONS ON STRUCTURAL DRAWINGS AGAINST ARCHITECTURAL DRAWINGS.
4. VERIFY OPENINGS THROUGH FLOORS, ROOFS, AND WALLS WITH ARCHITECTURAL, MECHANICAL, CIVIL AND ELECTRICAL REQUIREMENTS.
5. ANY DISCREPANCY OF INFORMATION DESCRIBED ON THE STRUCTURAL DRAWINGS, SPECIFICATIONS, OR ANY INFORMATION SHOWN ON OTHER DRAWINGS MUST BE BROUGHT TO THE ATTENTION OF THE STRUCTURAL ENGINEER FOR CLARIFICATION AT OR PRIOR TO PRE–BID MEETING.
6. PRE–ENGINEERED SYSTEMS AND COMPONENTS SHALL BE INSTALLED ACCORDING TO THE MANUFACTURER'S RECOMMENDATIONS AND SPECIFICATIONS. SHOP DRAWINGS SHALL BE SUBMITTED TO THE STRUCTURAL ENGINEER FOR REVIEW PRIOR TO FABRICATION.
7. THE OWNER SHALL INDEMNIFY SHELMARK ENGINEERING, LLC. AGAINST ANY LIABILITY ASSOCIATED WITH THE UNAUTHORIZED REUSE OR MODIFICATION OF THE CONSTRUCTION DOCUMENTS, CALCULATIONS, OR OTHER INSTRUMENTS USED IN THE PRODUCTION OF THESE DRAWINGS AND WILL NOT BE ALLOWED FOR ANY USE WHATSOEVER, EXCEPT AS REQUIRED BY BUILDING OFFICIALS IN THEIR PROCESS OF ISSUING A BUILDING PERMIT.

B. SUBMITTALS:

1. FURNISH THREE SETS OF SHOP AND ERECTION DRAWINGS TO STRUCTURAL ENGINEER FOR REVIEW PRIOR TO FABRICATION. UNLESS THE STRUCTURAL ENGINEER PROVIDES WRITTEN EXCEPTION, THE TRANSFER OF REVIEWED SHOP DRAWINGS TO THE ARCHITECT WITHIN 10 WORKING DAYS OF RECEIPT BY THE STRUCTURAL ENGINEER'S OFFICE, SHALL BE CONSIDERED AS "REVIEWED IN A TIMELY MANNER". ONE SET OF REVIEWED SHOP DRAWINGS WILL BE RETAINED BY THE STRUCTURAL ENGINEER.
2. FURNISH TWO SETS OF CONCRETE MIX DESIGNS INCLUDING STRENGTH TEST DATA AND MANUFACTURER'S LITERATURE ON ADMIXTURES FOR REVIEW BY STRUCTURAL ENGINEER NO LATER THAN 2 WEEKS PRIOR TO ON–SITE USE OF THESE MATERIALS.
3. CONTRACT DOCUMENTS ARE NOT TO BE USED BY ANY CONTRACTOR, SUB–CONTRACTOR OR SUPPLIER AS PART OF THEIR SHOP DRAWING SUBMITTAL. ANY SHOP DRAWINGS SUBMITTED IN SUCH A MANNER WILL BE REJECTED AND RETURNED WITHOUT REVIEW.

CONSTRUCTION NOTES

A. STRUCTURAL STABILITY DURING CONSTRUCTION:

1. THE STRUCTURAL DRAWINGS REPRESENT THE COMPLETED STRUCTURE WITH ALL ELEMENTS PROPERLY INSTALLED IN THEIR FINAL POSITIONS.
2. THE CONTRACTOR SHALL BE RESPONSIBLE FOR ALL MEANS AND METHODS OF CONSTRUCTION, INCLUDING THE DESIGN, CONSTRUCTION, SEQUENCING AND MAINTENANCE OF ANY SHORING, BRACING, OR OTHER TEMPORARY SUPPORTS OR ERECTION DEVICES AS MAY BE REQUIRED TO PROPERLY BRACE, SUPPORT AND ERECT ANY ELEMENT DURING CONSTRUCTION.
3. DO NOT PLACE BACKFILL AGAINST FOUNDATION WALLS OR GRADE BEAMS UNTIL BRACING FLOORS ARE IN PLACE, OR OTHER TEMPORARY BRACING IS INSTALLED.
4. IT IS THE CONTRACTOR'S RESPONSIBILITY TO PAINT ALL SURFACES WHICH REQUIRE PROTECTION FROM THE ELEMENTS WITH THE APPROPRIATE PAINT INCLUDING NECESSARY PRIMER COATS AND BACK PRIMING WHERE NECESSARY.

B. SITE SAFETY

1. THE CONTRACTOR SHALL VERIFY ALL CONDITIONS TO HIS SATISFACTION BEFORE PROCEEDING WITH CONSTRUCTION. CONFIRM LOCATION OF ALL UNDERGROUND UTILITIES, CONDUIT, CABLE, PIPE LINES, GAS LINES, TELEPHONE AND POWERLINES. REVIEW SOIL TESTING REPORTS AND ENVIRONMENTAL REPORTS. IF A CONFLICT WITHIN THE PLANS IS DISCOVERED, THE CONTRACTOR IS TO NOTIFY THE ENGINEER BEFORE SUBMITTING BIDS. THE CONTRACTOR ACCEPTS RESPONSIBILITY FOR ANY CONSTRUCTION PROBLEM OR DEFECT CAUSED BY PROCEEDING WITH CONSTRUCTION WITHOUT NOTIFYING THE ENGINEER OF CONFLICTS WITHIN THE PLANS.
2. THE CONTRACTOR SHALL BE RESPONSIBLE FOR ALL SITE SAFETY AND CONFORMANCE TO ALL SAFETY REGULATIONS PRESCRIBED BY FEDERAL, STATE AND LOCAL AUTHORITIES, INCLUDING ADHERENCE TO ALL OSHA REQUIREMENTS IN EFFECT AT THE TIME OF CONSTRUCTION.
3. THE DESIGN, CONSTRUCTION AND MAINTENANCE OF ALL ERECTION OR TEMPORARY SAFETY DEVICES SHALL BE THE RESPONSIBILITY OF THE CONTRACTOR.
4. THE CONTRACTOR, SHALL IDENTIFY, AND BRING TO THE ATTENTION OF THE STRUCTURAL ENGINEER, ANY DETAIL OR CONDITION SHOWN ON THE DRAWING WHICH IS NOT IN COMPLIANCE WITH ANY FEDERAL, STATE, OR LOCAL REGULATIONS, SO THAT THE STRUCTURAL ENGINEER MAY PROVIDE CONFORMING MODIFICATIONS.

SITE SAFETY DURING TROPICAL EVENTS:

A. HURRICANE CONDITIONS OF READINESS: THE TEXAS COAST IS SUBJECT TO HURRICANE STORMS AT VARIOUS TIMES DURING THE YEAR. THE CONTRACTOR SHALL COMPLY WITH THE FOLLOWING REQUIREMENTS FOR HURRICANE READINESS UNLESS SPECIFICALLY DIRECTED OTHERWISE:

1. CONDITION FOUR: (SUSTAINED WIND OF 50 KNOTS OR GREATER EXPECTED WITHIN 72 HOURS) NORMAL DAILY JOB SITE CLEANUP AND GOOD HOUSEKEEPING PRACTICES. COLLECT AND STORE IN PILES OR CONTAINERS ALL SCRAP LUMBER, WASTE MATERIAL, AND RUBBISH FOR REMOVAL AND DISPOSAL AT THE CLOSE OF EACH WORKDAY. MAINTAIN THE CONSTRUCTION SITE AT THE CLOSE OF EACH WORKDAY. MAINTAIN THE CONSTRUCTION SITE INCLUDING STORAGE AREA, FREE OF ACCUMULATION OF DEBRIS. STACK FORM LUMBER IN NEAT PILES LESS THAN 4 FEET HIGH. REMOVE ALL DEBRIS, TRASH, OR OBJECTS THAT COULD BECOME MISSILE HAZARDS. CONTACT SHELMARK ENGINEERING FOR CONDITION OF READINESS UPDATES AND COMPLETION OF REQUIRED ACTION.

2. CONDITION THREE: (SUSTAINED WINDS OF 50 KNOTS OR GREATER EXPECTED WITHIN 48 HOURS)

   A. MAINTAIN "CONDITION FOUR" REQUIREMENTS AND COMMENCE SECURING OPERATIONS AS NECESSARY FOR "CONDITION ONE" WHICH CANNOT BE COMPLETED WITHIN 18 HOURS.

   B. CEASE ALL ROUTINE ACTIVITIES THAT MIGHT INTERFERE WITH SECURING OPERATIONS. COMMENCE SECURING AND STOW ALL GEAR AND PORTABLE EQUIPMENT. MAKE PREPARATIONS FOR SECURING BUILDINGS.

   C. REVIEW REQUIREMENT PERTAINING TO "CONDITION TWO" AND CONTINUE ACTION AS NECESSARY TO ATTAIN "CONDITION THREE" READINESS. CONTACT THE SHELMARK ENGINEERING FOR WEATHER AND CONDITION OF READINESS UPDATES AND COMPLETION OF REQUIRED ACTIONS. REMOVE ALL FLOATING PLANT EQUIPMENT FROM SITE.

3. CONDITION TWO: (SUSTAINED WINDS OF 50 KNOTS OR GREATER EXPECTED WITHIN 24 HOURS) CURTAIL OR CEASE ROUTINE ACTIVITIES UNTIL SECURING OPERATIONS IS COMPLETE. REINFORCE OR REMOVE FORMWORK AND SCAFFOLDING. SECURE MACHINERY, TOOLS, EQUIPMENT, MATERIALS, OR REMOVE FROM THE JOB SITE. EXPEND EVERY EFFORT TO CLEAR ALL MISSILE HAZARDS AND LOOSE EQUIPMENT FROM PROJECT SITE. SECURE THE JOB SITE AND LEAVE PREMISES.

4. CONDITION ONE: (SUSTAINED WINDS OF 50 KNOTS OR GREATER EXPECTED WITHIN 12 HOURS) SAME AS REQUIREMENTS PERTAINING TO "CONDITION TWO".

B. DUE TO THE POTENTIAL DAMAGES THAT WOULD RESULT FROM A HURRICANE OR STORM, EQUIPMENT SHALL BE REMOVED FROM THE SITE WITHIN 24 HOURS OF THE SETTING OF STORM CONDITION THREE.

C. THE CONTRACTOR'S SUPERINTENDENT AND QUALITY CONTROL CHIEF (CQC CHIEF) SHALL ATTEND A BRIEFING ON THE ESTABLISHMENT OF STORM CONDITIONS. COMPLIANCE WITH PROCEDURES ESTABLISHED AS A PART OF THE STORM CONDITION SETTINGS IS MANDATORY.

NON–STRUCTURAL BUILDING ELEMENTS:

A. NON–STRUCTURAL BUILDING ELEMENTS SUCH AS WINDOWS, DOORS, STOREFRONT, CURTAIN WALLS AND OTHER COMPONENTS AND CLADDING ARE TO BE DESIGNED BY THE SUPPLIER TO RESIST LATERAL LOADS AS SHOWN IN THE DESIGN DATA SECTION OF THESE NOTES. ALL CONNECTIONS AND ATTACHMENTS OF SUCH ELEMENTS TOT HE BUILDING STRUCTURE ARE THE RESPONSIBILITY OF THE SUPPLIER AND SHALL BE DESIGNED IN SUCH A MANNER THAT THE LOADS ARE TRANSFERRED TO THE STRUCTURAL FRAMING SYSTEM.

WINDSTORM CRITERIA:

A. ALL EXTERIOR WINDOWS, DOORS, GARAGE DOORS, AND SKYLIGHTS SHALL HAVE A CURRENT PRODUCT EVALUATION REPORT ON FILE WITH THE TEXAS DEPARTMENT OF INSURANCE.

B. SPECIAL WINDSTORM INSPECTIONS AS REQUIRED BY THE TEXAS DEPARTMENT OF INSURANCE SHALL BE PERFORMED BY A QUALIFIED WINDSTORM INSPECTOR. WRITTEN REPORTS SHALL BE PROVIDED TO THE STRUCTURAL ENGINEER.

C. THE STRUCTURAL ENGINEER OR THEIR ASSIGNED REPRESENTATIVE SHALL MAKE VISUAL OBSERVATIONS OF THE FOLLOWING ITEMS FOR GENERAL CONFORMANCE TO THE STRUCTURAL DESIGN. THE CONTRACTOR SHALL PROVIDE ADEQUATE NOTICE WHEN SUCH ITEMS HAVE BEEN INSTALLED TO THE EXTENT WHICH WILL ALLOW THE OBSERVATION.

1. SUBGRADE PREPARATION INCLUDING PROOF ROLLING
2. FIRST POUR OF CONCRETE FOOTINGS/BEAMS.
3. FIRST POUR OF CONCRETE WALL SYSTEM.
4. WINDOW / DOOR INSTALLATION. (CONTRACTOR SHALL PROVIDE TO SME DOCUMENTATION OF WINDOW MANUFACTURE, SERIES, MODEL AND SIZES FOR ALL LOCATIONS.)
5. EXTERIOR WALL CLADDING – INSPECTING PANEL SIZE, NAIL SIZE, NAIL SPACING AND INSTALLATION AS PER PLANS.
6. ROOF SYSTEM. INSPECTING SCREW SIZE AND PATTERN. (CONTRACTOR SHALL PROVIDE SME W/ DOCUMENTATION OF ROOFING MATERIAL BEFORE INSTALLATION).
7. FINAL FRAMING – INSPECTIONS INCLUDING SIDING AND EXTERIOR FINISHING.
8. MECHANICAL – INSPECTIONS PERTAINING TO PROPER ANCHORAGE OF MECHANICAL EQUIPMENT. (I.E. A/C UNIT).
9. PROTECTION OF EXTERIOR OPENINGS – STORM SHUTTER SYSTEM. (CONTRACTOR SHALL PROVIDE SME W/ DOCUMENTATION OF THE MANUFACTURER AND MODEL FOR THE STORM SHUTTER SYSTEM BEFORE INSTALLATION).

DEFERRED SUBMITTALS:

1. DEFERRED SUBMITTALS IN ACCORDANCE WITH IBC 107.3.4.2 AND SHALL FIRST BE SUBMITTED TO THE PROJECT ARCHITECT AND/OR ENGINEER OF RECORD FOR REVIEW AND COORDINATION. FOLLOWING THE COMPLETION OF THE REVIEW AND COORDINATION BY THE ARCHITECT/ENGINEER OF RECORD; A SUBMITTAL MAY THEN BE MADE TO THE CITY BUILDING DEPARTMENT FOR REVIEW AND APPROVAL, WHICH SHALL INCLUDE A LETTER STATING THIS REVIEW AND COORDINATION HAS BEEN PERFORMED AND COMPLETED, AND PLANS AND CALCULATIONS FOR THE DEFERRED ITEMS ARE FOUND TO BE ACCEPTABLE WITH NO EXCEPTIONS.
2. THE LIST SHOULD CONTAIN BUT NOT NECESSARILY BE LIMITED TO THE FOLLOWING ITEMS:

   A.

   B.

TESTING & QUALITY CONTROL
1. SOILS COMPACTION TESTS AND CONCRETE COMPRESSIVE STRENGTH TESTS SHOULD BE OBTAINED.
2. A PROFESSIONAL ENGINEER OR HIS REPRESENTATIVE MUST PERFORM CONSTRUCTION REVIEWS OF THE SUBGRADE PREPARATION AND SLAB PREPARATION.

CONCRETE

1. ALL CONCRETE SHALL BE NORMAL WEIGHT (NW) AGGREGATE UNLESS NOTED ON THE PLANS OR SCHEDULES.
2. CEMENT FOR ALL CONCRETE IN CONTACT WITH SOILS USE TYPE: I/II
3. CONCRETE SHALL CONFORM TO THE FOLLOWING TABLE:

USE	28 DAY STRENGTH	WEIGHT CLASS	SLUMP ±1"	MAX. AGG. SIZE	AIR
	PSI		INCHES	INCHES	%
FOOTINGS/PIER CAPS	4000	NW	4	1	0–2
WALLS AND COLUMNS	3000	NW	4	1	0–2
FLATWORK	3000	NW	4	1	0–2
ALL OTHER	3000	NW	5	1	0–2

CONCRETE REINFORCEMENT:

1. DETAIL BARS IN ACCORDANCE WITH "ACI DETAILING MANUAL", PUBLICATION SP–66, AND "BUILDING CODE REQUIREMENTS FOR STRUCTURAL CONCRETE, "ACI 318, LATEST EDITIONS, PROVIDE DETAILS INDICATING REINFORCING CONTINUITY AT CONSTRUCTION JOINTS.
2. REINFORCEMENT PROTECTION
   CONCRETE PLACED AGAINST EARTH.....3"
   CONCRETE PLACED IN FORMS BUT EXPOSED TO WEATHER OR EARTH:
   BARS #5 AND SMALLER.....1–1/2"
   BARS #6 AND LARGER.....2"
   COLUMNS, GIRDERS, BEAMS.....1–1/2"
   SLABS OR WALLS NOT EXPOSED TO WEATHER OR EARTH.....1"
3. SPLICES IN REINFORCEMENT ARE NOT PERMITTED EXCEPT AS DETAILED OR AUTHORIZED BY STRUCTURAL ENGINEER.
4. LAP ALL CONTINUOUS REINFORCING BARS 36 DIAMETERS AT SPLICES, TEES, AND CORNERS.
5. SPLICE CONTINUOUS TOP BARS AT MIDSPAN, SPLICE CONTINUOUS BOTTOM BARS OVER THE SUPPORT.
6. PROVIDE ACCESSORIES NECESSARY TO PROPERLY SUPPORT REINFORCING AT POSITIONS SHOWN ON PLANS AND DETAILS.
7. ENSURE HORIZONTAL CONTINUITY IN WALLS, FOOTINGS AND GRADE BEAMS, BY PROVIDING CORNER BARS AT ALL CORNERS AND INTERSECTIONS, CORNER BARS SHALL MATCH SIZE AND SPACING OF HORIZONTAL REINFORCING AND EXTEND A MINIMUM OF 36 BAR DIAMETERS BEYOND THE CORNER.
8. PLACE 2–#5 (1 EACH FACE) WITH 2'–0" PROJECTION AROUND OPENINGS THROUGH FLOOR TOPPING SLABS, UNLESS NOTED.
9. WIRE FABRIC REINFORCEMENT SHALL LAP ONE FULL MESH AT SPLICES AND BE WIRED TOGETHER.
10. WELDING OF REINFORCING SHALL NOT BE PERMITTED UNLESS SPECIFICALLY CALLED FOR OR APPROVED BY THE STRUCTURAL ENGINEER.
11. DO NOT RE–BEND ANY BARS WITH A YIELD STRESS GREATER THAN 40 KSI. THE USE OF HEAT TO FACILITATE BENDING OF REINFORCING BARS WILL NOT BE PERMITTED.
12. RUSTED REINFORCEMENT WILL NOT BE REJECTED PROVIDED THE MINIMUM DIMENSIONS AND CROSS SECTIONAL AREA OF A HARD WIRE BRUSH SPECIMEN MEET THE PHYSICAL REQUIREMENTS FOR THE SIZE AND GRADE OF THE STEEL SPECIFIED.
13. CONCRETE REINFORCING SHALL CONFORM TO THE FOLLOWING TABLE:

USE	ASTM	YIELD, KSI	NOTES
MILD REINFORCING	A615	60	
COLUMN TIES	A615	60	#3 BARS 40 KSI
BEAM STIRRUPS	A615	60	#3 BARS 40 KSI
WELDABLE	A706	60	

DESIGN WIND PRESSURES (PSF)

COMPONENT	EFFECTIVE AREA	DESIGN PRESSURE (PSF)

COUNTY APPROVAL:
SIGNATURE _____ DATE_____

FOUNDATION NOTES:

1. THE SOILS ARE ASSUMED TO BE LEVEL ON THIS SITE AND WITHIN 25' OF THE SITE.
2. DO NOT PLANT TREES CLOSER THAN 20 FEET TO THE SLAB. REMOVE ALL EXISTING TREE TRUNK/ROOTS AND REPLACE WITH COMPACTED FILL.
3. TO BRING TO FINISH GRADE SELECT STRUCTURAL FILL SHALL BE PROVIDED UNDERNEATH THE SLAB AREA. THE FILL SHALL CONSIST OF OFF–SITE INORGANIC SILTY CLAYS OR SANDY CLAYS WITH LIQUID LIMIT LESS THAN 40 AND A PLASTICITY INDEX (PI) BETWEEN 10 END 20 PLACED IN LIFTS NOT EXCEEDING 8–INCHES. THE TOP 1 TO 2–INCHES UNDER THE SLAB CAN BE BANK SAND FOR LEVELING PURPOSES.
4. THE ADDITIONAL FILL AND THE TOP 8–INCHES OF THE NATURAL SOIL, AFTER SCARIFYING THE TOP 6–INCHES, SHALL BE COMPACTED TO 95% STANDARD PROCTOR DENSITY PER ASTM D–698 AT A MOISTURE CONTENT WITHIN –1 TO +3% OF OPTIMUM.
5. SITE SHALL BE GRADED AND MAINTAINED TO PERMIT POSITIVE DRAINAGE AWAY FROM THE FOUNDATION.
6. ALL MIXING, TRANSPORTATION, PLACING, AND CURING OF CONCRETE SHALL COMPLY WITH ACI 318–02.
7. ALL FOUNDATION CONCRETE SHALL BE NORMAL WEIGHT AND SHALL HAVE A COMPRESSIVE STRENGTH OF 4,000 PSI AT 28 DAYS WITH A 4–INCH TO 5–INCH SLUMP FOR THE SLAB.
8. REINFORCING BARS WITH A SIZE GREATER THAN #3 SHALL CONFORM TO ASTM A–615 GRADE 60. LAP CONTINUOUS BARS 36 BAR DIAMETERS AT SPLICES.
9. SUPPORT SLAB REINFORCEMENT WITH PLASTIC CHAIRS AT 24" O.C.E.W. MAXIMUM OR CONCRETE BRICKS @ 3'–0" O.C.E.W. MAXIMUM. ADDITIONAL CHAIR/SUPPORTS MAY BE REQUIRED AT DISCRETION ON ENGINEER
10. PROVIDE (4) #5 X 4'–0" REBAR (2 TOP AND 2 BOTTOM) IN EXTERIOR FACE OF GRADE BEAMS AT CORNERS. PROVIDE (4) #5 X 4'–0" REBAR (2 TOP AND 2 BOTTOM) WHERE INTERIOR BEAMS DEAD END INTO ANOTHER BEAM. WHEN THE GRADE BEAM DEPTH EXCEEDS 30–INCHES PROVIDE (2) #5 BARS AT THE CENTER AND EVERY 12–INCHES THEREAFTER.
11. DAMP PROOF SLAB WITH A MINIMUM OF 6 MIL. POLYETHYLENE SHEATHING. LAP JOINTS 6–INCHES AND SEAL WITH TAPE. TURN UP AT WALLS.
12. PROVIDE THE FOLLOWING COVER FOR REINFORCEMENT:

    CONCRETE CAST AGAINST AND PERMANENTLY EXPOSED TO THE EARTH:.....3"
    CONCRETE EXPOSED TO EARTH OR WEATHER:.....1–1/2"
    CONCRETE NOT EXPOSED TO WEATHER OR IN CONTACT WITH THE GROUND:...3/4"
13. PIPING AND ELECTRICAL SHALL BE UNDER THE SLAB AND SLEEVED THROUGH ALL GRADE BEAMS.
14. STIRRUPS SHALL BE NO. 3 BARS SPACED PER PLANS. ALTERNATE METHODS MUST BE PRE–APPROVED BY ENGINEER.
15. STIRRUP DEPTH TO BE BEAM DEPTH (BELOW DROPS) LESS 7" (UNLESS NOTED OTHERWISE).
16. MOISTURE LOSS IN THE SOILS SHALL BE MINIMIZED.
17. PROVIDE CRACK CONTROL JOINTS AT 25 FEET CENTERS EACH WAY AT ALL SLAB AREAS WHICH WILL BE VISIBLE. SAWCUT CONTROL JOINTS WITHIN 24 HOURS AFTER HARD TROWELING.
18. SOILS COMPACTION TESTS AND CONCRETE COMPRESSIVE STRENGTH TESTS SHOULD BE OBTAINED. A PROFESSIONAL ENGINEER OR HIS REPRESENTATIVE MUST PERFORM CONSTRUCTION REVIEWS OF THE FOOTING INSTALLATION AND SLAB PREPARATION.
19. FOOTINGS SHALL BEAR ON EXISTING SOILS WHICH MEET SELECT FILL CLASSIFICATIONS. IF QUESTIONABLE SOIL IS ENCOUNTERED, THE STRUCTURAL ENGINEER SHALL BE NOTIFIED IMMEDIATELY. RE: REPORT NO. 1708/1200 BY COASTAL TESTING LABORATORIES, INC. ALL RECOMMENDATIONS THEREIN THAT RELATE TO THE WORK SHOWN ON THESE DRAWINGS MUST BE FOLLOWED.

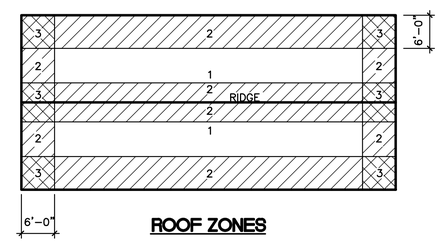

ROOF ZONES

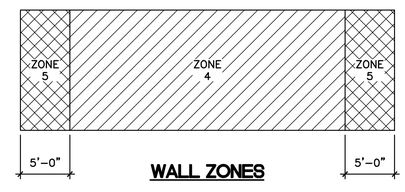

WALL ZONES

GALVESTON COUNTY BEACH PAVILION CRYSTAL BEACH, TX 77650

BE–Arc LLC Project No : C–13–007.01

SHELMARK ENGINEERING, L.L.C.
CIVIL | MARINE | PLANNING | STRUCTURAL
801 FM 517 ROAD EAST | DICKINSON, TEXAS 77539
TX FIRM NO. F-2113

INTERIM SUBMITTAL
DOCUMENT INTENDED FOR REVIEW ONLY. NOT ISSUED FOR CONSTRUCTION.

ENGINEER:
MARCUS J. MICHNA P.E.
REGISTRATION NO. 84739

DATE: 09/29/2017

DATE	REVISION

DESIGN DEVELOPMENT

DATE ISSUED:
9/29/2017

COPYRIGHT 2017
Project No: 17–217

S0.01

GENERAL NOTES

MASONRY NOTES:

1. ALL MASONRY MATERIALS AND CONSTRUCTION SHALL COMPLY WITH THE RECOMMENDATIONS OF THE BRICK INSTITUTE OF AMERICA (BIA) AND NATIONAL CONCRETE MASONRY ASSOCIATION (NCMA) AND MINIMUM REQUIREMENTS ESTABLISHED BY LOCAL BUILDING CODE.
2. ALL CONCRETE MASONRY UNITS (CMU) SHALL BE ASTM C-90 TYPE N UNLESS OTHERWISE SPECIFIED BY APPLICABLE BUILDING CODE.
3. CONTROL JOINTS SHALL BE SPACED PER PLANS AND SPECIFICATIONS OR AT A MAXIMUM SPACING OF 40'-0" CENTERS, UNLESS SPECIFICALLY APPROVED OTHERWISE BY ENGINEER.
4. MORTAR: EXCEPT AS OTHERWISE SET FORTH HEREIN ALL MORTARS AND THE MATERIALS THEREIN SHALL CONFORM TO THE STANDARD SPECIFICATIONS FOR MORTAR OF MASONRY UNITS, ASTM C270.

   A) MORTAR USED TO BOND UNIT MASONRY SHALL BE OF TYPE M, S, OR N, AND SHALL COMPLY WITH THE PROPERTY SPECIFICATIONS SET FORTH BELOW:

   MORTAR STRENGTH PROPERTY SPECIFICATIONS

TYPE	MINIMUM AVERAGE STRENGTH (PSI)
M	2500
S	1800
N	750

   B) THE TYPE OF MORTAR BASED ON CONSIDERATION OF THE LOCATION OF THE UNIT MASONRY CONSTRUCTION SHALL BE AS FOLLOWS:

USE OF LOCATION	TYPE OF MORTAR
BELOW GRADE FOUNDATION AND WALLS	M
RETAINING WALLS	M
FIRE RESISTIVE WALLS RATED 2 HOURS OR MORE	M OR S
EXTERIOR WALLS AND LOAD BEARING WALLS	M OR S
PARTITIONS	M, S OR N
SOLID MASONRY UNITS	ONE CLASSIFICATION LESS THAN THE ABOVE
MORTAR OR GROUT UNDER CONCENTRATED LOADS	M
FENCES	M OR S

5. ALL REINFORCED MASONRY WALLS WITH OPENINGS UP TO 4'-0" WIDE, SHALL HAVE ONE BAR (MINIMUM) AT EACH SIDE OF OPENINGS. FOR OPENINGS LARGER THAN 4'-0" WIDE PROVIDE 2 BARS AT EACH SIDE OF OPENINGS. FILL ALL REINFORCED CELLS WITH 2500 P.S.I. GROUT. REINFORCING AT EDGES OF OPENINGS TO MATCH TYPICAL MASONRY REIN-FORCING SIZE (UNLESS NOTED OTHERWISE) AND EXTEND TO TOP OF WALL.
6. SPECIAL INSPECTIONS IARE REQUIRED IN ACCORDANCE WITH IBC 2003 1704.5.2.
7. PROVIDE TRUSS TYPE HORIZONTAL REINFORCING AT 16" O.C. FOR ALL CMU WALLS UNLESS NOTED OTHERWISE.
8. GROUT SOLID ALL REINFORCED CELLS AND BOND BEAMS WITH 2500 PSI GROUT.
9. ALL REINFORCED MASONRY WALL CORNERS AND INTERSECTIONS SHALL HAVE ONE VERTICAL BAR (MINIMUM). FILL REINFORCED CELL (S) WITH 2500 P.S.I. GROUT. REINFORCING SHALL MATCH TYPICAL MASONRY REINFORCING SIZE (UNLESS NOTED OTHERWISE) AND EXTEND TO TOP OF WALL.
10. PROVIDE ONE VERTICAL BAR (MIN.) FIRST CELL EACH SIDE OF CONTROL JOINTS. FILL CELL WITH 2500 P.S.I. GROUT.

STRUCTURAL STEEL:

A. CONNECTIONS:

1. UNLESS SPECIFICALLY NOTED ON THE DRAWINGS, ALL STEEL DETAILS AND CONNECTIONS SHALL CONFORM TO THE STANDARDS OF A.I.S.C. AND SHALL DEVELOP ONE-HALF THE SHEAR CAPACITY OF THE MEMBER.
2. CONNECTIONS SHALL USE A MINIMUM OF 3/4" DIA A325 BOLTS (OR WELDED EQUIVALENT) UNLESS OTHERWISE NOTED. EACH CONNECTION SHALL HAVE A MINIMUM OF TWO BOLTS.
3. BOLTS MAY BE INSTALLED SNUG TIGHT AS DEFINED BY AISC, WITH THE FOLLOWING EXCEPTIONS WHICH MUST BE TENSIONED TO THE VALUES IN TABLE 4 OF "RCSC SPECIFICATIONS FOR STRUCTURAL JOINTS USING A325 OR A490 BOLTS".

   A. WHERE NOTED AS "SC" ON THE DRAWINGS.

B. WELDS:

1. MINIMUM WELDS: AISC SPECIFICATION, NOT LESS THAN 1/4" FILLET, CONTINUOUS UNLESS OTHERWISE NOTED.
2. ALL GROOVE WELDS TO BE FULL PENETRATION UNLESS NOTED.
3. WELDERS SHALL HAVE CURRENT EVIDENCE OF PASSING THE APPROPRIATE A.W.S. QUALIFICATION TESTS.

C. FIELD MODIFICATIONS:

1. NO BEAM, COLUMN, BRACE, CONNECTION, BASE PLATE OR ANCHOR BOLT MAY BE FIELD MODIFIED WITHOUT PRIOR APPROVAL OF THE STRUCTURAL ENGINEER.

D. DESIGNED, FABRICATED, AND ERECTED IN ACCORDANCE WITH AMERICAN INSTITUTE OF STEEL CONSTRUCTION, MANUAL OF STEEL CONSTRUCTION, ALLOWABLE STRESS DESIGN, LATEST EDITION.

E. SPLICING OF STRUCTURAL STEEL WHERE NOT DETAILED IS PROHIBITED WITHOUT PRIOR APPROVAL OF STRUCTURAL ENGINEER.

F. ALL STEEL MEMBERS AND CONNECTIONS SHALL RECEIVE ONE SHOP COAT OF IRON OXIDE CORROSION INHIBITIVE PRIMER PER METAL BUILDING MANUFACTURER RECOMMENDATIONS.

SHAPE	ASTM	MIN. YIELD STRENGTH, KSI	NOTES
WF BEAMS	A992	50	BEAMS AND COLUMNS
ROLLED SHAPES	A36	36	ANGLES AND CHANNELS
PIPE	A53	35	
TUBE	A500 GRADE B	46	
PLATES	A36	36	
MISC.	A36	36	
BOLTS	A325		
ANCHOR RODS	F1554	36	UNLESS NOTED OTHERWISE

WOOD FRAMING SPECIFICATIONS

1. WOOD FRAMING SIZES, VERTICAL FRAMING, HORIZONTAL FRAMING, FIRESTOPS, ANCHORAGE, FURRING AND CONNECTORS NOT SHOWN ON DOCUMENTS SHALL BE PER LOCAL BUILDING CODE MINIMUM REQUIREMENTS.
2. A) PLYWOOD ROOF SHEATHING SHALL BE 5/8" THICK STANDARD C.D. EXPOSURE 1, PANEL INDEX 19/32 CONFORMING TO U.S. PS-1 AND STAMPED WITH DFPA GRADE-TRADMARK.

   B) PLYWOOD PANELS SHALL BE NAILED TO SUPPORTS WITH 8d COMMON NAILS, OR EQUIVALENT FASTENERS.

   C) NAIL SPACING SHALL BE SIX INCHES ON CENTER AT PANEL EDGES AND 12 INCHES ON CENTER AT INTERMEDIATE SUPPORTS.
3. ALL STRUCTURAL LUMBER SHALL BE S.Y.P. OF THE FOLLOWING MINIMUM GRADES AND ALLOWABLE STRESSES OR EQUIVALENT AS PER NATIONAL FOREST PRODUCTS ASSOCIATION.

STUDS	STANDARD STUD
JOISTS	STRUCT. GRADE NO. 2
BEAM 2"-4" THICK	STRUCT. GRADE NO. 2
POSTS	STRUCT. GRADE NO. 2
PLATE STOCK	STRUCT. GRADE NO. 3

   - ALL FLOOR JOIST BRIDGING TO BE LOCAL CODES OR AS SHOWN.
   - GLU-LAM MEMBERS SHALL BE COMBINATION 24F WITH Fb = 2400 PSI.
   - PSL. MEMBERS SHALL MIN. Fb = 2900 PSI. & MIN. Fv = 290 PSI.
4. ALL LUMBER SHALL BE STAMPED WITH THE GRADE MARK OF AN APPROVED TESTING AGENCY.
5. ALL WOOD IN CONTACT WITH CONCRETE OR EXPOSED TO WEATHER SHALL BE TREATED LUMBER.
6. FRAMED OPENINGS: DOUBLE STUD FOR OPENING LESS THAN 4' WIDE TRIPLE STUD FOR OPENING 4' WIDE OR MORE.
7. THE NUMBER OF WALL STUDS AT BEARING POINTS OF 2X MEMBER BEAMS SHALL EXCEED THE NUMBER OF MEMBERS IN THE BEAM BY ONE. THE CENTERLINE OF THE BEAM SHALL BE THE CENTERLINE OF THE SUPPORTING WALL STUDS. (UNLESS NOTED OTHERWISE ON PLAN.)
8. ALL FLUSH BEAMS AND JOISTS TO BE SUPPORTED BY APPROVED HANGER.
9. ═══ = INDICATES BEARING WALLS.
10. ━ • ━ = INDICATES WOOD BEAM
11. ⊏ = HANGER
13. CEILING JOIST FRAMING TO BE AS SHOWN ON PLANS.
14. ROOF RAFTERS SHALL BE 2X8 AT 16" O.C. MAX. ALLOWABLE RAFTER SPAN 12'-10". UNLESS NOTED OTHERWISE.

TIMBER NOTES:

1. ALL TIMBER SHALL BE SOUTHERN YELLOW PINE #2 KILN DRIED.
2. ALL STRUCTURAL COMPOSITE LUMBER SHALL BE SOUTHERN PINE OR EQUAL W/ AN ALLOWABLE BENDING STRESS OF 2400 PSI.
3. ALL STRUCTURAL COMPOSITE LUMBER SHALL MEET THE AITC VOLUNTARY PRODUCT STANDARD PS 556-73.
4. ALL STRUCTURAL COMPOSITE LUMBER SHALL BE PRESERVATIVE TREATED IN ACCORDANCE WITH C15-98.
5. ALL FIRST FLOOR FRAMING SHALL BE PRESSURE TREATED TIMBER.
6. ALL FRAMING CONNECTIONS, CLIPS AND HANGERS MADE WITH PRESSURE TREATED TIMBER SHALL BE G185 HOT DIPPED GALVANIZED PER ASTM A653.
7. **DO NOT BORE HOLES THROUGH ANY STRUCTURAL BEAMS, GLU-LAMS, OR PRE-ENGINEERED TRUSS.**

DECKING AND SHEATHING

1. DECKING FOR ROOF SHALL BE 5/8" THICK CDX PLYWOOD EXPOSURE 1 WITH AN APR RATING OF 40/20. DECKING APPLIED OVER 8.25" STRUCTURAL INSULATED PANELS (S.I.P.).
2. DECKING FOR FLOORS SHALL BE 1 1/8" THICK T&G APA RATED PLYWOOD STANDARD C-D INTERIOR WITH EXTERIOR GLUE OR ORIENTED STRAND BOARD (OSB) (STURDY FLOOR) WITH PANEL SPAN RATING OF 48/24. INSTALL DECKING WITH FACE GRAIN ACROSS SUPPORT.
3. GYPSUM WALLBOARD FOR SHEARWALLS SHALL BE 5/8" THICK AND FREE FROM IMPERFECTIONS AND CONFORM TO ASTM C79 SPECIFICATIONS AND AS SHOWN ON ARCHITECTURAL DRAWINGS.
4. EXTERIOR WALL SHEATHING SHALL BE 5/8" CDX PLYWOOD. (U.N.O.)

WIRE NAILS

1. NAILING INSTALLATION AND MATERIALS ARE TO BE IN COMPLIANCE WITH A.I.T.C., NDS, AND APPLICABLE BUILDING CODE REQUIREMENTS.
2. GUN NAILS MAY BE USED IN LIEU OF HAND NAILING GUN NAIL SIZES SHALL BE AS FOLLOWS:

PENNY WEIGHT	GUN NAIL DIAMETER
8d	0.113"
10d	0.123"
12d	0.123"
16d	0.133"

3. NAILS SHALL HAVE A MINIMUM PENETRATION OF 6 TIMES THE WIRE DIAMETER UNLESS OTHERWISE NOTED ON PLANS.
4. EDGE DISTANCE FOR ALL NAILS SHALL BE MINIMUM OF 2 TIMES THE WIRE DIAMETER UNLESS OTHERWISE NOTED ON PLANS.
5. ALL NAILS SHOWN IN NAILING SCHEDULE SHALL BE COMMON.
6. ALL NAILS SHALL BE CORROSION RESISTANT.

STUD SCHEDULE

4 STORY	EXTERIOR EXPOSURE TO WIND & ROOF OR FLOOR LOAD BEARING.	INTERIOR WALLS W/ ROOF OR FLOOR TRUSS BEARING
1ST FLOOR	2 X 6 AT 16" O.C.	2 X 4 AT 16" O.C.
	2 X 6 AT 16" O.C.	2 X 4 AT 16" O.C.

BALLOON FRAMING (SEE NOTE 3)

STUD HEIGHT	EXTERIOR	INTERIOR
≤ 10'	2X4 @ 12" O.C.	2X4 @ 16" O.C.
10' TO 14'	2X6 @ 8" O.C.	2X6 @ 12" O.C.
15' TO 20'	2X6 @ 8" O.C.	2X6 @ 12" O.C.

NOTES:

1. REFER TO "WOOD FRAMING NOTES" SECTION OF STRUCTURAL SPECIFICATION FOR MATERIAL AND LUMBER GRADE.
2. STUD HEIGHT CAN BE MEASURED FROM FOUNDATION TO EITHER ROOF OR INTERMEDIATE SUPPORT FROM EITHER STAIR LANDING OR OTHER MEMBER THAT IS MECHANICAL TIED TO FLOOR DIAGRAM.
3. WALL STUDS SHALL BE SOUTHERN YELLOW PINE NO. 1 DENSE.

EPOXY ANCHORS/ADHESIVE

1. INJECTABLE ADHESIVE SHALL BE DESIGNED TO ACCEPT STATIC MIXING NOZZLE WHICH THOROUGHLY BLENDS COMPONENT A AND COMPONENT B AND ALLOWS INJECTION DIRECTLY INTO DRILLED HOLE. ONLY INJECTION TOOLS AND STATIC MIXING NOZZLES AS RECOMMENDED BY MANUFACTURER SHALL BE USED. MANUFACTURE'S INSTRUCTIONS SHALL BE FOLLOWED. INJECTION ADHESIVE SHALL BE FORMULATED TO INCLUDE RESIN AND HARDENER TO PROVIDE OPTIONAL CURING SPEED AS WELL AS HIGH STRENGTH AND STIFFNESS. TYPICAL CURING TIME AT 68°F (20°C) SHALL BE APPROXIMATELY 30 MINUTES.
2. INJECTION ADHESIVE SHALL BE HIT-HY 200 MAX-SD, AS FURNISHED BY HILTI.
3. DRILL HOLES WITH ROTARY IMPACT HAMMER DRILLS USING CARBIDE TIPPED BITS, DRILL BITS SHALL BE OF DIAMETERS AS SPECIFIED BY THE ANCHOR MANUFACTURER. UNLESS OTHERWISE SHOWN ON THE DRAWINGS, ALL HOLES SHALL BE DRILLED PERPENDICULAR TO THE CONCRETE SURFACE.
4. PERFORM ANCHOR INSTALLATION IN ACCORDANCE WITH MANUFACTURER INSTRUCTIONS.
5. CLEAN ALL HOLES PER MANUFACTURER INSTRUCTIONS TO REMOVE LOOSE MATERIAL AND DRILLING DUST PRIOR TO INSTALLATION OF ADHESIVE. INJECT ADHESIVE INTO HOLES PROCEEDING FROM THE BOTTOM OF THE HOLE AND PROGRESSING TOWARD THE SURFACE IN SUCH A MANNER AS TO AVOID INTRODUCTION OF AIR POCKETS IN THE ADHESIVE. FOLLOW MANUFACTURER RECOMMENDATIONS TO ENSURE PROPER MIXING OF ADHESIVE COMPONENTS. SUFFICIENT ADHESIVE SHALL BE INJECTED IN THE HOLE TO ENSURE THAT THE ANNULAR GAP IS FILLED TO THE SURFACE. REMOVE EXCESS ADHESIVE FROM THE SURFACE. SHIM ANCHORS WITH SUITABLE DEVICE TO CENTER THE ANCHOR IN THE HOLE. DO NOT DISTURB OR LOAD ANCHORS BEFORE MANUFACTURER SPECIFIED CURE TIME HAS ELAPSED.
6. OBSERVE MANUFACTURER RECOMMENDATIONS WITH RESPECT TO INSTALLATION TEMPERATURES OF CARTRIDGE INJECTION ADHESIVE ANCHORS AND CAPSULE ANCHORS.
7. REMOVE AND REPLACE MISPLACED OR MALFUNCTIONING ANCHORS. FILL EMPTY ANCHOR HOLES AND PATCH FAILED ANCHOR LOCATIONS WITH HIGH-STRENGTH NON-SHRINK, NON METALLIC GROUT.
8. ANCHORS, BOLTS, NUTS, AND WASHERS: BOLTS AND STUDS, NUTS, AND WASHERS SHALL CONFORM TO ASTM A307, GRADE A, AND ASTM A449, ASTM A563, AND ASTM F436, F1554 GR. 55, AS APPLICABLE. HOT-DIP GALVANIZED BOLTS AND STUDS INCLUDING ASSOCIATED NUTS AND WASHERS IN ACCORDANCE WITH ASTM A153.

COUNTY APPROVAL:
SIGNATURE _____ DATE_____

GALVESTON COUNTY
BEACH PAVILION
CRYSTAL BEACH, TX 77650

BE-Arc LLC Project No : C-13-007.01

SHELMARK ENGINEERING, L.L.C.
CIVIL | MARINE | PLANNING | STRUCTURAL
801 FM 517 ROAD EAST | DICKINSON, TEXAS 77539
TX FIRM NO. F-2113

INTERIM SUBMITTAL
DOCUMENT INTENDED FOR REVIEW ONLY. NOT ISSUED FOR CONSTRUCTION.

ENGINEER:
MARCUS J. MICHNA P.E.
REGISTRATION NO. 84739

DATE: 09/29/2017

DATE	REVISION

DESIGN DEVELOPMENT

DATE ISSUED:
9/29/2017

COPYRIGHT 2017
Project No: 17-217

S0.02

GENERAL NOTES

COUNTY APPROVAL:
SIGNATURE _____ DATE_____

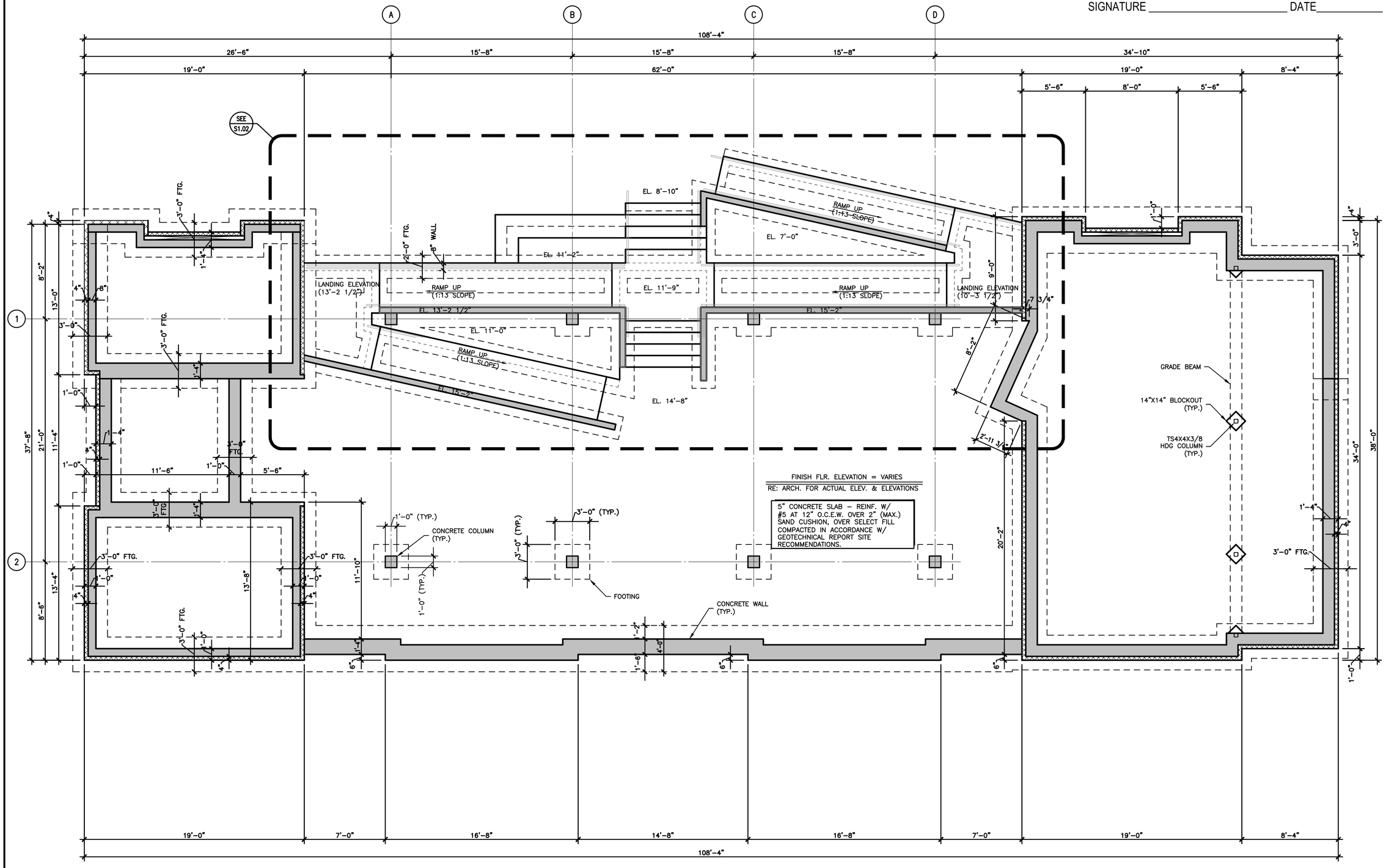

FOUNDATION PLAN

SCALE: 1/4"=1'-0"

GALVESTON COUNTY BEACH PAVILION CRYSTAL BEACH, TX 77650

BE-Arc LLC Project No : C-13-007.01

SHELMARK ENGINEERING, L.L.C.
CIVIL | MARINE | PLANNING | STRUCTURAL
921 FM 517 ROAD EAST | DICKINSON, TEXAS 77539
TX FIRM NO. F-2113

INTERIM SUBMITTAL
DOCUMENT INTENDED FOR REVIEW ONLY. NOT ISSUED FOR CONSTRUCTION.

ENGINEER:
MARCUS J. MICHNA P.E.
REGISTRATION NO. 84739

DATE: 09/29/2017

DATE	REVISION

DESIGN DEVELOPMENT

DATE ISSUED:
9/29/2017

COPYRIGHT 2017
Project No: 17-217

S1.01

FOUNDATION PLAN

COUNTY APPROVAL:
SIGNATURE _____ DATE_____

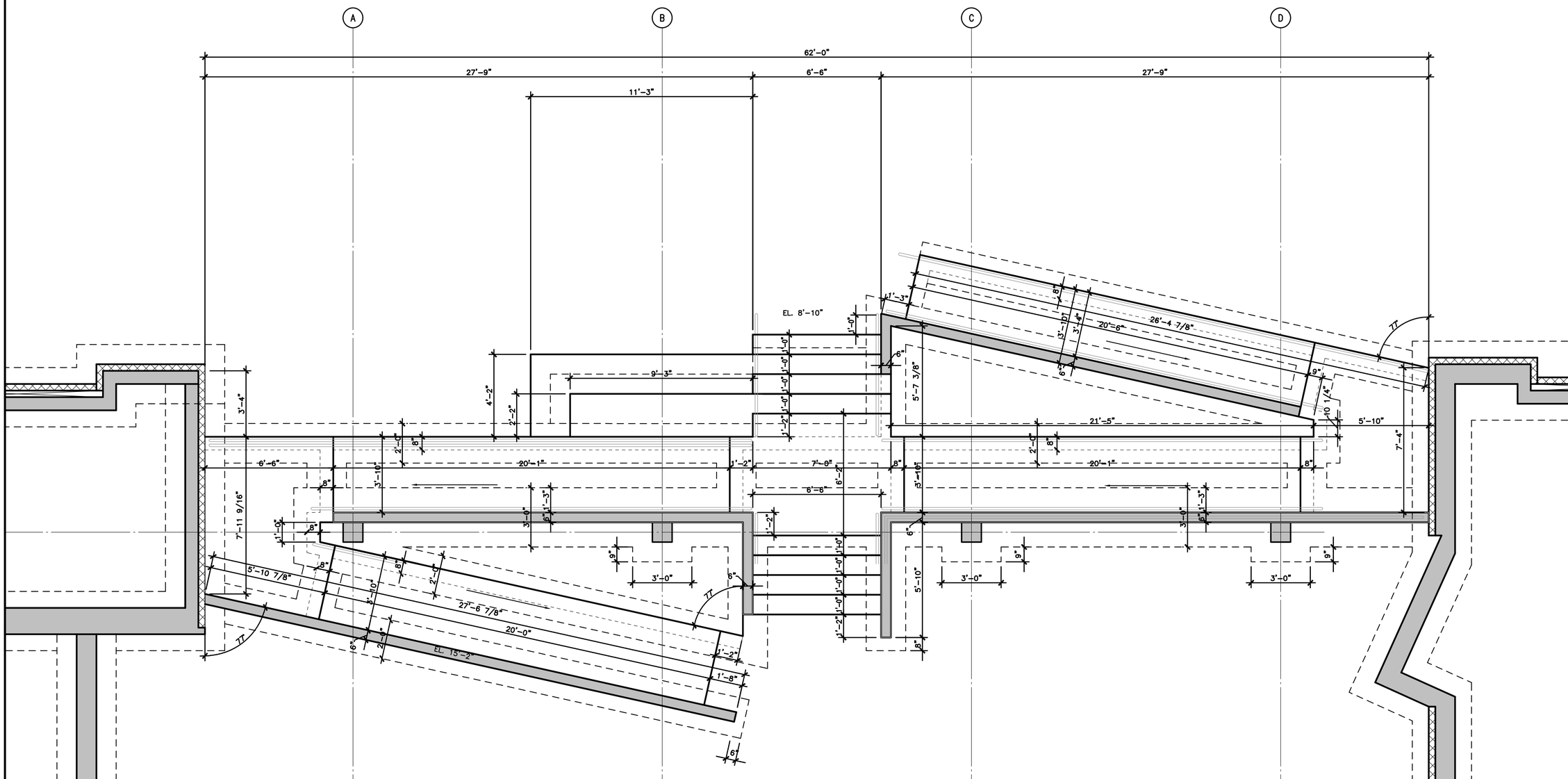

ENLARGED RAMP / STAIR FOUNDATION PLAN
SCALE: 3/8"=1'-0"

GALVESTON COUNTY BEACH PAVILION CRYSTAL BEACH, TX 77650

BE-Arc LLC Project No : C-13-007.01

SHELMARK ENGINEERING, L.L.C.
CIVIL | MARINE | PLANNING | STRUCTURAL
921 FM 517 ROAD EAST | DICKINSON, TEXAS 77539
TX FIRM NO. F-2113

INTERIM SUBMITTAL
DOCUMENT INTENDED FOR REVIEW ONLY. NOT ISSUED FOR CONSTRUCTION.

ENGINEER:
MARCUS J. MICHNA P.E.
REGISTRATION NO. 84739

DATE: 09/29/2017

DATE	REVISION

DESIGN DEVELOPMENT

DATE ISSUED:
9/29/2017

COPYRIGHT 2017
Project No: 17-217

S1.02

ENLARGED RAMP-STAIR FOUNDATION PLAN

COUNTY APPROVAL:
SIGNATURE _____ DATE_____

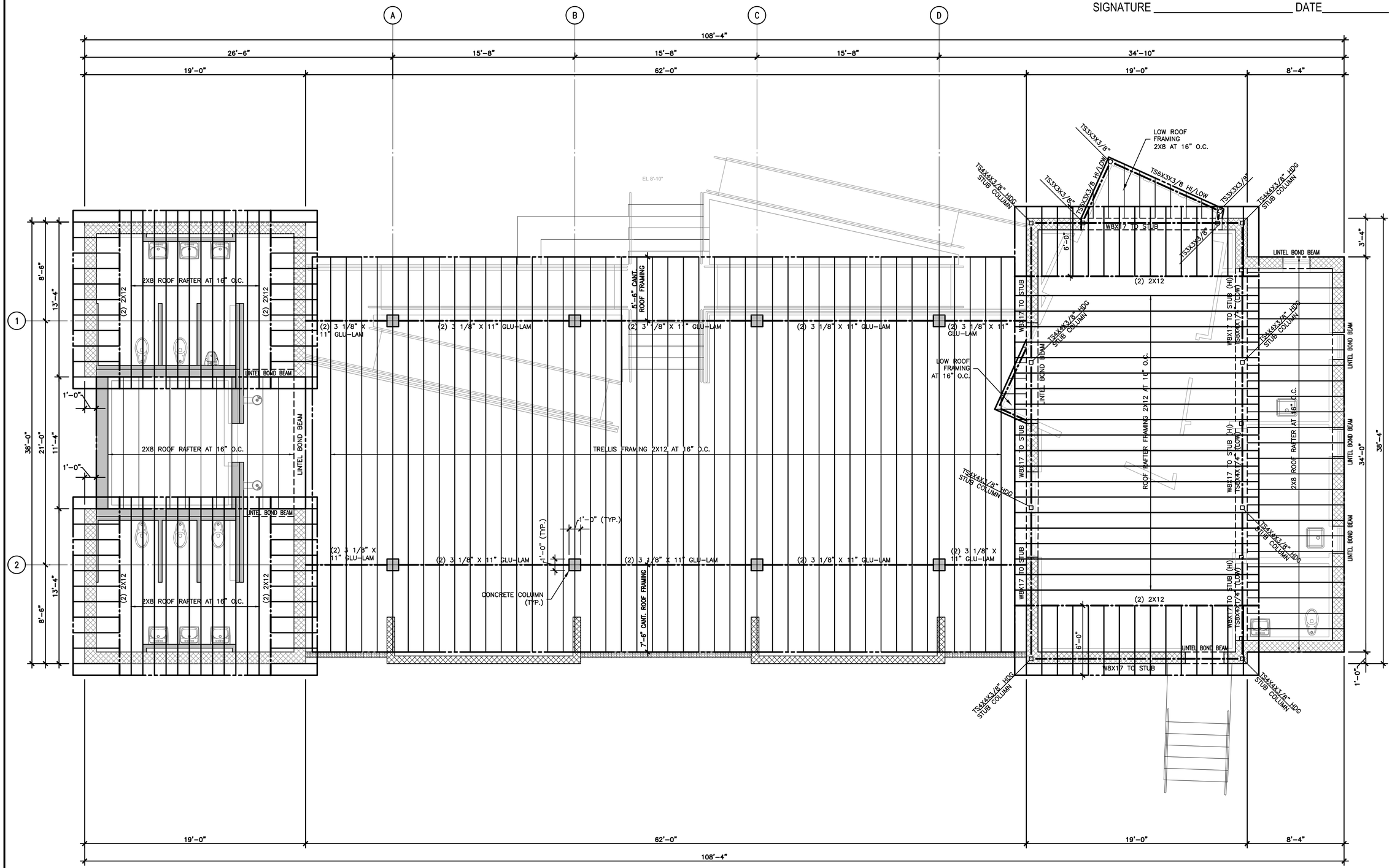

ROOF FRAMING PLAN

SCALE: 1/4"=1'-0"

GALVESTON COUNTY
BEACH PAVILION
CRYSTAL BEACH, TX 77650

BE-Arc LLC Project No : C-13-007.01

SHELMARK ENGINEERING, L.L.C.
CIVIL | MARINE | PLANNING | STRUCTURAL
921 FM 517 ROAD EAST | DICKINSON, TEXAS 77539
TX FIRM NO. F-2113

INTERIM SUBMITTAL
DOCUMENT INTENDED FOR REVIEW ONLY. NOT ISSUED FOR CONSTRUCTION.

ENGINEER:
MARCUS J. MICHNA P.E.
REGISTRATION NO. 84739

DATE: 09/29/2017

DATE	REVISION

DESIGN DEVELOPMENT

DATE ISSUED:
9/29/2017

COPYRIGHT 2017
Project No: 17-217

S2.01

ROOF FRAMING PLAN

COUNTY APPROVAL:
SIGNATURE _____ DATE_____

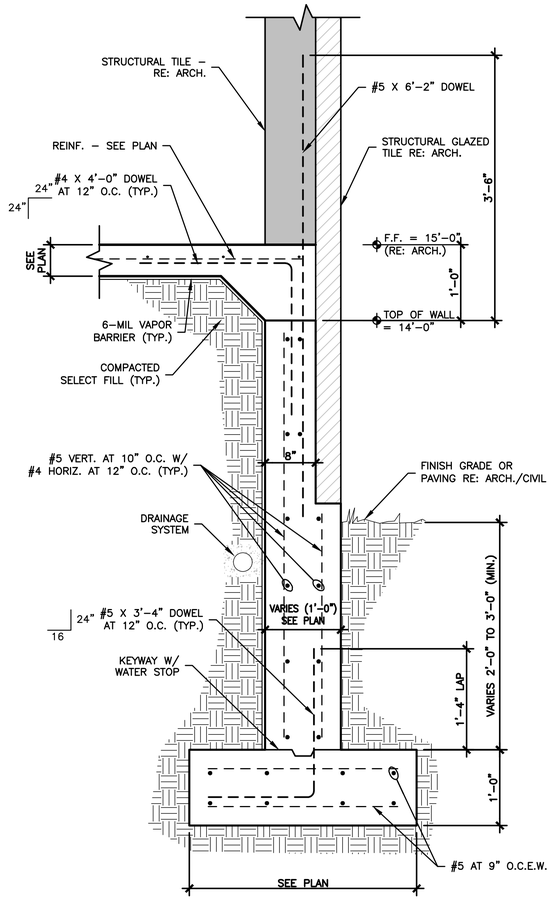

1 SECTION

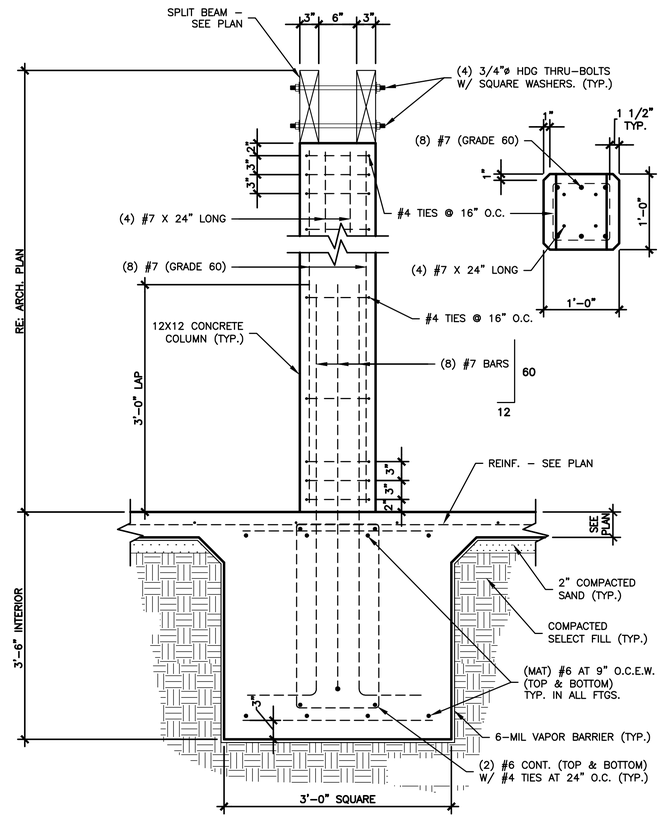

2 SECTION

FOUNDATION DETAILS
SCALE: 1"=1'–0" (U.N.O.)

GALVESTON COUNTY
BEACH PAVILION
CRYSTAL BEACH, TX 77650

BE–Arc LLC Project No : C–13–007.01

SHELMARK ENGINEERING, L.L.C.
CIVIL | MARINE | PLANNING | STRUCTURAL
921 FM 517 ROAD EAST | DICKINSON, TEXAS 77539
TX FIRM NO. F-2113

INTERIM SUBMITTAL
DOCUMENT INTENDED FOR REVIEW ONLY. NOT ISSUED FOR CONSTRUCTION.

ENGINEER:
MARCUS J. MICHNA P.E.
REGISTRATION NO. 84739

DATE: 09/29/2017

DATE	REVISION

DESIGN DEVELOPMENT

DATE ISSUED:
9/29/2017

COPYRIGHT 2017
Project No: 17–217

S3.01

FOUNDATION DETAILS

COUNTY APPROVAL:
SIGNATURE _____ DATE_____

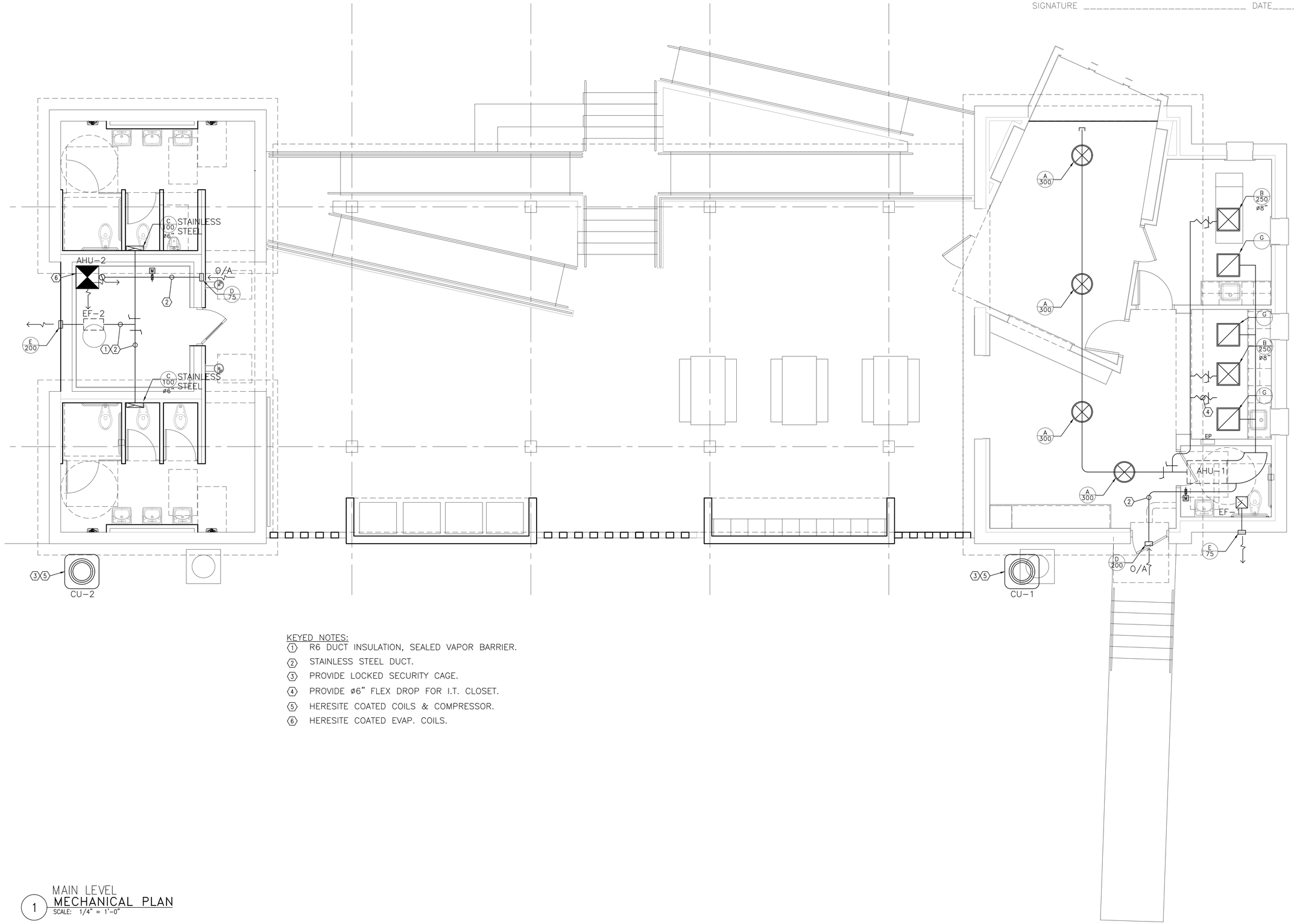

KEYED NOTES:

1. R6 DUCT INSULATION, SEALED VAPOR BARRIER.
2. STAINLESS STEEL DUCT.
3. PROVIDE LOCKED SECURITY CAGE.
4. PROVIDE ø6" FLEX DROP FOR I.T. CLOSET.
5. HERESITE COATED COILS & COMPRESSOR.
6. HERESITE COATED EVAP. COILS.

1 MAIN LEVEL
MECHANICAL PLAN
SCALE: 1/4" = 1'-0"

GALVESTON COUNTY
BEACH PAVILION
CRYSTAL BEACH, TX 77650

BE-Arc LLC Project No : C-13-007.01

bis Engineering
REG # F-11156
P.O. Box 357
Galveston, TX 77555
PH 409.621.5740

THIS PROJECT IS THE PROPERTY OF BIS ENGINEERING IT MAY NOT BE TRACED, OR REPRODUCED, IN WHOLE OR IN PART, WITHOUT IT BE SUBMITTED WITHOUT PRIOR WRITTEN CONSENT FROM BIS ENGINEERING.

BRAX EASTERWOOD
DESIGN
2728 AVENUE Q SUITE 2
GALVESTON TEXAS 77550
PHONE 409-354-8976
EASTERWOOD@BEAIA.COM

DESIGN REVIEW

DATE	REVISION

DESIGN DEVELOPMENT

DATE ISSUED:
9/28/2017

COPYRIGHT 2017

M1.0

COUNTY APPROVAL:
SIGNATURE ____________________________ DATE____________

DUCTWORK SYMBOLS LEGEND

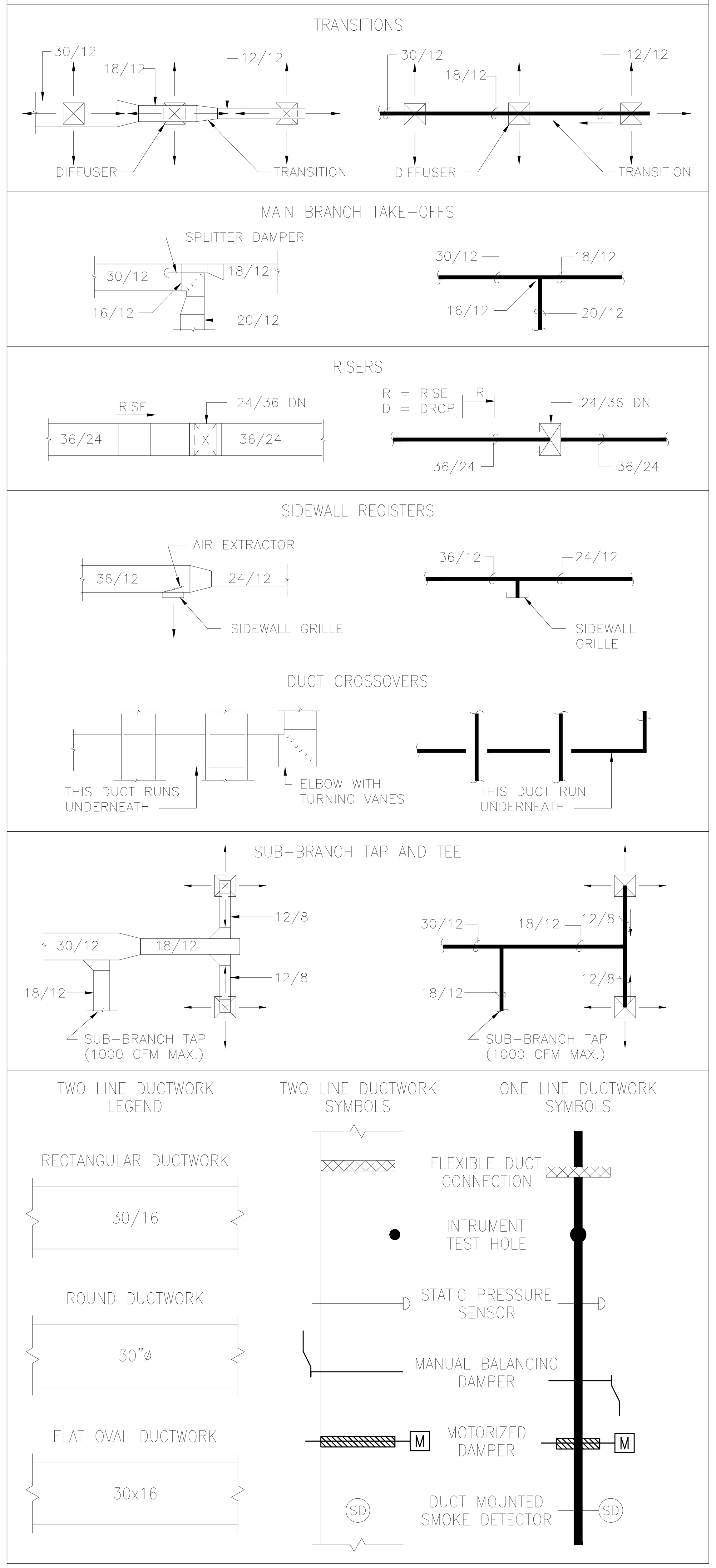

DUCT LINER AND INSULATION

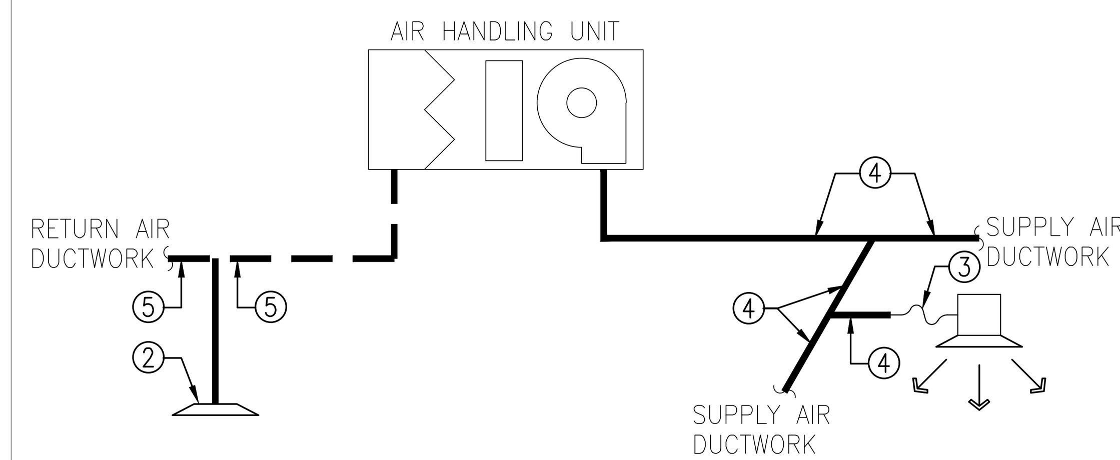

AIR HANDLING UNIT

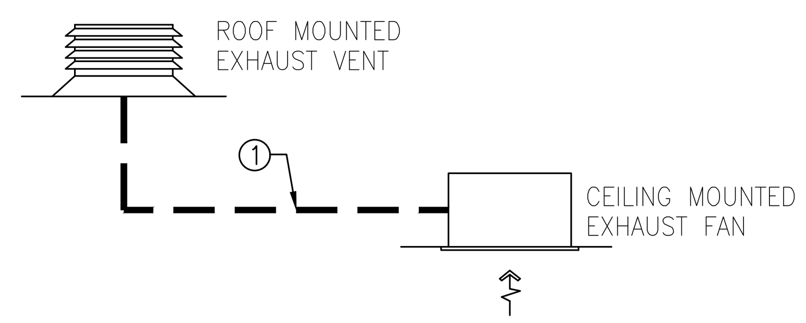

EXHAUST AIR SYSTEMS

NOTES

1. SHEETMETAL DUCTWORK WITH EXTERNAL DUCTWORK INSULATION AS SPECIFIED.
2. EXTERNAL INSULATION (MIN. R-8) ON BACK PAN OF RETURN AIR GRILLE.
3. FLEXIBLE DUCTWORK WITH EXTERNAL DUCTWORK INSULATION.
4. SHEETMETAL DUCTWORK WITH EXTERNAL DUCTWORK INSULATION, (R-8) 1" THICK 1-1/2 LB LINER WITH FOIL REINFORCED KRAFT VPOR BARRIER FACING. REFER TO SPECIFICATIONS.
5. SHEETMETAL DUCTWORK WITH EXTERNAL DUCTWORK INSULATION, (R-8) 1" THICK 1-1/2 LB LINER WITH FOIL REINFORCED KRAFT VPOR BARRIER FACING. REFER TO SPECIFICATIONS.

GRILLE SIZING SCHEDULE

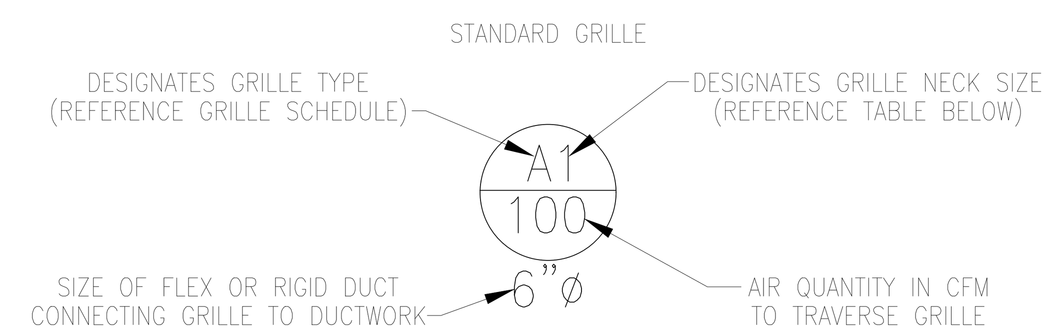

ALL GRILLES SHOWN SHALL BE FOUR-WAY THROW UNLESS OTHERWISE SHOWN.

GRILLE SIZE DESIGNATION	GRILLE NECK SIZE	GRILLE SIZE DESIGNATION	GRILLE NECK SIZE
1	6" x 6"	7	15" x 15"
2	8" x 8"	8	16" x 16"
3	9" x 9"	9	18" x 18"
4	10" x 10"	10	20" x 20"
5	12" x 12"	11	22" x 22"
6	14" x 14"	12	24" x 24"

FANS

MARK	LOCATION	CFM	MAXIMUM RPM	EXT. STATIC PRESSURE (IN. W.C.)	HORSE POWER	CURRENT CHARAC.	LOCALLY SWITCHED BY	INTERLOCKED WITH	FAN TYPE	MANUFACTURER	MODEL NUMBER	REMARKS
EF-1	BATHROOMS	50	–	–	50 W	120/1/60	BATH LIGHT	–	–	GREENHECK	–	–

GENERAL NOTES:

1. EXTERNAL STATIC PRESSURE INCLUDES LOSSES DUE TO DUCTWORK, AIR DEVICES, DAMPERS, AND DUCT MOUNTED HOT WATER COILS WHERE APPLICABLE. DIRTY FILTER AND UNIT CASING MUST BE ADDED TO EXTERNAL STATIC PRESSURE TO OBTAIN TOTAL PRESSURE LOSS. INCREASE HORSEPOWER AS REQUIRED TO MEET YOUR TOTAL PRESSURE LOSS. COORDINATE WITH ELECTRICIAN.
2. MINIMUM RECOMMENDED CLEARANCE AROUND UNIT IS 12 INCHES ON NON-SERVICE SIDES AND 30 INCHES ON SERVICE SIDES. MAINTAIN MINIMUM CLEARANCE AS REQUIRED TO OPEN ACCESS AND CONTROL DOORS ON UNIT FOR SERVICE, MAINTENANCE, AND INSPECTION. MAINTAIN MINIMUM ELECTRICAL CLEARANCE AS REQUIRED BY NEC.
3. FAN SHALL BE CENTRIFUGAL, BELT DRIVEN TYPE UNLESS OTHERWISE SCHEDULED.

REMARKS:

1. CENTRIFUGAL CEILING MOUNTED EXHAUST FAN.
2. PROVIDE WITH BACKDRAFT DAMPER.
3. PROVIDE WITH WHITE FINISH.
4. INTERLOCK WITH ROOFTOP UNIT RTU-2.

GRILLE

MARK	SERVICE	TYPE	DAMPER	CONSTRUCTION MATERIAL	FINISH COLOR	MANUFACTURER	MODEL NUMBER	REMARKS
A	SUPPLY AIR	DIFFUSER	VOLUME	STEEL	OFF WHITE	TITUS	PAS	24" X 24" MODULE FACE, SQUARE CEILING, ROUND NECK, OBD, INSULATED
B	RETURN AIR	GRILLE	–	STEEL	OFF WHITE	TITUS	PAR	24" X 24" MODULE, PERFORATED
C	SUPPLY AIR	DIFFUSER	VOLUME	STEEL	OFF WHITE	–	–	WALL INLET LOUVER CORROSION RESISTANT
D	SUPPLY AIR	DIFFUSER	VOLUME	STEEL	OFF WHITE	–	–	WALL INLET LOUVER W/ BACKDRAFT DAMPER CORROSION RESISTANT
E	EXHAUST	LOUVER	–	STEEL	OFF WHITE	–	–	WALL EXHAUST LOUVER W/ BACKDRAFT DAMPER CORRISION RESISTANT

GENERAL NOTES:

1. N/A

REMARKS:

1. N/A

SYMBOL LEGEND

SYMBOL	DESCRIPTION (DISREGARD ITEMS NOT SHOWN ON PLANS)	SYMBOL	DESCRIPTION (DISREGARD ITEMS NOT SHOWN ON PLANS)
GENERAL		SENSORS	
#	KEY NOTE TAG	T	THERMOSTAT AND TEMPERATURE SENSOR
#	NOTE SPECIFIC TO DETAIL TAG	H	HUMIDISTAT
#	REVISION TAG	S	SMOKE DETECTOR
	NEW EQUIPMENT	AIR DEVICES	
DUCTWORK			GRILLE SIZE TAG (REFER TO GRILLE SIZE LEGEND)
	SUPPLY AIR DUCTWORK		SUPPLY AIR GRILLE WITH FOUR-WAY THROW
	RETURN AIR AND OUTSIDE AIR DUCTWORK		RETURN AIR GRILLE WITH SOUND BOOT
	EXHAUST AIR DUCTWORK		EXHAUST AIR GRILLE
	FLEXIBLE DUCTWORK	PIPING	
	SUPPLY AIR DUCTWORK THROUGH HORIZONTAL PARTITION	—D—	CONDENSATE DRAIN LINE
	RETURN AIR AND OUTSIDE AIR DUCTWORK THROUGH HORIZONTAL PARTITION		
	EXHAUST AIR DUCTWORK THROUGH HORIZONTAL PARTITION		
	FIRE DAMPER (VERTICAL)		
	MANUAL BALANCING DAMPER (SEE DAMPER SCHEDULE)		
M	MOTORIZED DAMPER (SEE DAMPER SCHEDULE)		

1. CODES, RULES AND REGULATIONS - DESIGN OF SYSTEM
   A) ALL WORK AND MATERIALS SHALL BE IN FULL ACCORDANCE WITH ALL APPLICABLE FEDERAL, STATE, AND LOCAL LAWS, ORDINANCES AND CODES. 2009 IBC, 2009 IMC, 2008 NEC.
   B) WHEN THE DRAWINGS CALL FOR MATERIALS OR CONSTRUCTION OF A BETTER QUALITY OR LARGER SIZES THAN REQUIRED BY THE ABOVE MENTIONED CODES AND RULES, WORK SHALL BE AS SPECIFIED OR SHOWN RATHER THAN AS REQUIRED BY CODE. ALL ITEMS OR FEATURES OF THE MECHANICAL SYSTEMS REQUIRED BY CODE SHALL BE INCLUDED, EVEN THOUGH NOT SPECIFIED HEREIN.
   C) INSTALLATION OF THE SYSTEMS SHALL BE IN ACCORDANCE WITH THE ABOVE MENTIONED CODES AND REGULATIONS AND ALSO SHALL CONFORM TO GOOD, ACCEPTED MECHANICAL PRACTICES.
2. PROVIDE AND INSTALL VOLUME DAMPERS IN ALL BRANCH DUCTS.
3. FLEXIBLE DUCTS TO BE GLASS-FLEX 6'-0", MAXIMUM IN LENGTH, WHERE APPLICABLE.
4. COORDINATE EXACT LOCATION OF ALL AIR OUTLETS AND INLETS (DIFFUSERS, REGISTERS AND GRILLES) WITH APPROPRIATE ARCHITECTURAL PLAN, AND VERIFY THEIR LOCATION WITH ARCHITECT ON THE JOB SITE BEFORE INSTALLATION. COLOR AS DIRECTED BY OWNER.
5. AUTOMATIC TEMPERATURE CONTROL DEVICE FOR REGULATION OF SPACE TEMPERATURE SHALL BE CAPABLE OF BEING SET FROM 55 TO 85°F, AND HAVE THE ABILITY TO OPERATE THE HEATING AND COOLING IN SEQUENCE. CONTROL SHALL BE ADJUSTABLE TO PROVIDE A RANGE OF UP TO 5°F BETWEEN FULL HEATING AND FULL COOLING AND HAVE CAPABILITY OF TERMINATING ALL HEATING AT A TEMPERATURE NO MORE THAN 70°F, AND COOLING AT A TEMPERATURE NOT LESS THAN 78°F.
6. APPLIANCES DESIGNED TO BE FIXED IN POSITION SHALL BE FASTENED IN PLACE.
7. A MAINTENANCE LABEL SHALL BE AFFIXED TO MECHANICAL EQUIPMENT AND A MAINTENANCE MANUAL SHALL BE PROVIDED FOR THE OWNERS USE.
8. PROVIDE ACCESS PANEL FOR ALL CONCEALED EQUIPMENT AND VOLUME DAMPERS.
9. ALL DUCT SIZES SHOWN ON THE FLOOR PLANS ARE CLEAR INSIDE DIMENSIONS.
10. THE MECHANICAL CONTRACTOR SHALL SECURE AND PAY FOR ALL REQUIRED PERMITS AND FEES.
11. SYSTEM SHALL BE EQUIPPED WITH AN AUTOMATIC SHUT-OFF. THE SMOKE DETECTOR SHALL BE INSTALLED IN THE MAIN SUPPLY AIR DUCT DOWNSTREAM OF THE FILTERS OR THEY MAY BE INSTALLED IN EACH ROOM OR SPACE SERVED BY THE SUPPLY AIR DUCT. DETECTORS SHALL ALSO BE INSTALLED IN THE MAIN RETURN DUCT (IF REQ'D. BY THE LOCAL CODE) AHEAD OF OSA INTAKE. SEE CODE FOR EXEMPTIONS AND LOCAL AUTHORITY FOR CODE INTERPRETATION, OR AS INDICATED ON PLAN.
12. ALL EQUIPMENT AND APPLIANCES ARE LISTED PRODUCTS, AND WILL BE INSTALLED ACCORDING TO THEIR LISTING, AND ALL LISTING INFORMATION WILL BE AVAILABLE FOR INSPECTION.
13. ALL DUCTWORK SHEETMETAL FABRICATION AND INSTALLATION SHALL COMPLY WITH LATEST EDITION OF SMACNA STANDARDS.
14. COORDINATE IN THE FIELD THE EXACT LOCATION OF ALL CEILING MOUNTED GRILLES AND DIFFUSERS WITH LIGHT FIXTURES
15. ALL BRACKETS, CLAMPS, AND HANGERS SHALL BE HOT DIPPED GALVANIZED. COAT ALL CUT ENDS AND WELDS WITH "ZRC" COLD GALVANIZING COMPOUND.
16. REFRIGERANT IS R-410A
17. SIZE REFRIGERANT LINES PER MANUFACTURER'S RECOMMENDATIONS.
18. PROVIDE 1 1/2" INSULATION ON REFRIGERANT LINES.
19. PROVIDE SEVEN (7) DAY PROGRAMMABLE THERMOSTATS.
20. ALL SUPPLY AND RETURN AIR DUCTS AND PLENUMS SHALL BE INSULATED WITH A MINIMUM OF R-8 INSULATION (2").
21. INSULATE CONDENSATE PIPE WITH 1 1/2" UV RESISTANT INSULATION AND WEATHERPROOF TAPE. PROVIDE DRIP LOOPS ON THE EXTERIOR WIRES, CONDUIT, AND LINES TO PREVENT WATER INFILTRATION TO INTERIOR SPACES.
22. SPLITTER OR BALANCING DAMPERS WHERE SHOWN, SHALL BE OF SUFFICIENT GAUGE TO PREVENT BUCKLING OR VIBRATING AND SHALL BE OPERATED BY A QUADRANT DAMPER ADJUSTER WITH LOCKING FEATURES WHICH WILL HOLD DAMPER SECURELY IN POSITION AT DESIRED SETTING.
23. DUCT CONNECTIONS TO EQUIPMENT SHALL BE MADE THROUGH AIRTIGHT CANVAS OR OTHER APPROVED FLEXIBLE CONNECTIONS.
24. PROVIDE CERTIFIED TEST AND BALANCE OF HVAC SYSTEM (AND EXHAUST SYSTEM WHERE APPLICABLE) NO LATER THAN THE DAY C.O. INSPECTION TO TENANT FOR APPROVAL BY LANDLORD. CONTRACTOR MUST USE LANDLORDS DESIGNATED CONTRACTOR FOR THIS.
25. UNLESS SPECIFICALLY NOTED IN THE ARCHITECTURAL OR MECH.. DRAWINGS, ALL DUCTWORK SHALL BE INSTALLED AS HIGH AS POSSIBLE WITHIN THE PREMISES. ALL DUCT WORK EQUIPMENT AND OTHER ACCESSORIES IN PUBLIC OR SALES AREAS SHALL BE CONCEALED.
26. ALL H.V.A.C EQUIPMENT & DUCTS SHALL BE PROVIDED WITH VIBRATION ISOLATORS, SOUND TRAPS, DUCT LINING, ACOUSTICAL HOUSINGS, ACOUSTICAL LOUVERS ETC. AS APPROPRIATE.
27. ALL ROOF CUTS, PATCHING AND REPAIR SHALL BE COORDINATED WITH THE LANDLORD AND PERFORMED BY THE LANDLORDS ROOFING CONTRACTOR AT TENANTS EXPENSE.
28. CONTRACTOR SHALL REPORT ANY DISCREPANCIES FOUND BETWEEN THESE DRAWINGS AND ACTUAL FIELD CONDITIONS TO THE ARCHITECT AND OWNER.
29. CONTRACTOR SHALL BE RESPONSIBLE FOR COORDINATION WITH CEILING INSTALLER FOR PROPER LOCATION OF ACCESS PANELS FOR EASE OF MAINTENANCE INCLUDING CHANGING OF FILTERS.

GALVESTON COUNTY BEACH PAVILION CRYSTAL BEACH, TX 77650

BE-Arc LLC Project No : C-13-007.01

ibis Engineering
REG # F-11156
P.O. Box 55171
Galveston, Texas 77555
PH 409.621.6740

THIS PRINT IS THE PROPERTY OF IBIS ENGINEERING IT MUST NOT BE TRACED OR REPRODUCED IN ANY MANNER NOR SHALL IT BE SUBMITTED WITHOUT PRIOR WRITTEN CONSENT FROM IBIS ENGINEERING.

BRAX EASTERWOOD
DESIGN
2728 AVENUE Q SUITE 2
GALVESTON TEXAS 77550
PHONE 409-354-8976
EASTERWOOD@BEAIA.COM

DESIGN REVIEW

DATE	REVISION

DESIGN DEVELOPMENT

DATE ISSUED:
9/28/2017

COPYRIGHT 2017

M2.0

MECHANICAL SPECIFICATIONS

SINGLE-WALL RECTANGULAR DUCTS AND FITTINGS

A. GENERAL FABRICATION REQUIREMENTS: COMPLY WITH SMACNA'S "HVAC DUCT CONSTRUCTION STANDARDS – METAL AND FLEXIBLE" BASED ON REQUIRED STATIC-PRESSURE CLASS UNLESS OTHERWISE INDICATED.

B. TRANSVERSE JOINTS: SELECT JOINT TYPES AND FABRICATE ACCORDING TO SMACNA'S "HVAC DUCT CONSTRUCTION STANDARDS – METAL AND FLEXIBLE," FIGURE 2-1, "RECTANGULAR DUCT /TRANSVERSE JOINTS," FOR STATIC-PRESSURE CLASS, APPLICABLE SEALING REQUIREMENTS, MATERIALS INVOLVED, DUCT-SUPPORT INTERVALS, AND OTHER PROVISIONS IN SMACNA'S "HVAC DUCT CONSTRUCTION STANDARDS – METAL AND FLEXIBLE."

C. LONGITUDINAL SEAMS: SELECT SEAM TYPES AND FABRICATE ACCORDING TO SMACNA'S "HVAC DUCT CONSTRUCTION STANDARDS – METAL AND FLEXIBLE," FIGURE 2-2, "RECTANGULAR DUCT /LONGITUDINAL SEAMS," FOR STATIC-PRESSURE CLASS, APPLICABLE SEALING REQUIREMENTS, MATERIALS INVOLVED, DUCT-SUPPORT INTERVALS, AND OTHER PROVISIONS IN SMACNA'S "HVAC DUCT CONSTRUCTION STANDARDS – METAL AND FLEXIBLE."

D. ELBOWS, TRANSITIONS, OFFSETS, BRANCH CONNECTIONS, AND OTHER DUCT CONSTRUCTION: SELECT TYPES AND FABRICATE ACCORDING TO SMACNA'S "HVAC DUCT CONSTRUCTION STANDARDS – METAL AND FLEXIBLE," CHAPTER 4, "FITTINGS AND OTHER CONSTRUCTION," FOR STATIC-PRESSURE CLASS, APPLICABLE SEALING REQUIREMENTS, MATERIALS INVOLVED, DUCT -SUPPORT INTERVALS, AND OTHER PROVISIONS IN SMACNA'S "HVAC DUCT CONSTRUCTION STANDARDS – METAL AND FLEXIBLE."

SINGLE-WALL ROUND AND FLAT-QVAL DUCTS AN) FITTINGS

A. GENERAL FABRICATION REQUIREMENTS: COMPLY WITH SMACNA'S "HVAC DUCT CONSTRUCTION STANDARDS – METAL AND FLEXIBLE," CHAPTER 3, "ROUND, OVAL, AND FLEXIBLE DUCT," BASED ON INDICATED STATIC-PRESSURE CLASS UNLESS OTHERWISE INDICATED.

B. FLAT-OVAL DUCTS: INDICATED DIMENSIONS ARE THE DUCT WIDTH (MAJOR DIMENSION) AND DIAMETER OF THE ROUND SIDES CONNECTING THE FLAT PORTIONS OF THE DUCT (MINOR DIMENSION).

C. TRANSVERSE JOINTS: SELECT JOINT TYPES AND FABRICATE ACCORDING TO SMACNA'S "HVAC DUCT CONSTRUCTION STANDARDS – METAL AND FLEXIBLE," FIGURE 3-1, "ROUND DUCT TRANSVERSE JOINTS," FOR STATIC-PRESSURE CLASS, APPLICABLE SEALING REQUIREMENTS, MATERIALS INVOLVED, DUCT-SUPPORT INTERVALS, AND OTHER PROVISIONS IN SMACNA'S "HVAC DUCT CONSTRUCTION STANDARDS – METAL AND FLEXIBLE."

D. LONGITUDINAL SEAMS: SELECT SEAM TYPES AND FABRICATE ACCORDING TO SMACNA'S "HVAC DUCT CONSTRUCTION STANDARDS – METAL AND FLEXIBLE," FIGURE 3-2, "ROUND DUCT LONGITUDINAL SEAMS," FOR STATIC-PRESSURE CLASS, APPLICABLE SEALING REQUIREMENTS, MATERIALS INVOLVED, DUCT-SUPPORT INTERVALS, AND OTHER PROVISIONS IN SMACNA'S "HVAC DUCT CONSTRUCTION STANDARDS – METAL AND FLEXIBLE."

E. TEES AND LATERALS: SELECT TYPES AND FABRICATE ACCORDING TO SMACNA'S "HVAC DUCT CONSTRUCTION STANDARDS – METAL AND FLEXIBLE," FIGURE 3-5, "go DEGREE TEES AND LATERALS," AND FIGURE 3-6, "CONICAL TEES," FOR STATIC-PRESSURE CLASS, APPLICABLE SEALING REQUIREMENTS, MATERIALS INVOLVED, DUCT-SUPPORT INTERVALS, AND OTHER PROVISIONS IN SMACNA'S "HVAC DUCT CONSTRUCTION STANDARDS – METAL AND FLEXIBLE."

SHEET METAL DUCTWORK

A. GENERAL MATERIAL REQUIREMENTS: COMPLY WITH SMACNA'S "HVAC DUCT CONSTRUCTION STANDARDS – METAL AND FLEXIBLE" FOR ACCEPTABLE MATERIALS, MATERIAL THICKNESSES, AND DUCT CONSTRUCTION METHODS UNLESS OTHERWISE INDICATED. SHEET METAL MATERIALS SHALL BE FREE OF PITTING, SEAM MARKS, ROLLER MARKS, STAINS, DISCOLORATIONS, AND OTHER IMPERFECTIONS.

B. GALVANIZED SHEET STEEL: COMPLY WITH ASTM A 653/A 653M.

C. SUPPLY AND RETURN DUCTWORK SHALL BE EXTERNALLY INSULA TED 'MTH EXTERNAL BLANKET INSULATION. DUCTWORK SHALL BE INTERNALLY LINED ONLY WHERE SPECIFICALLY INDICATED.

D. DUCTWORK SHALL BE SEALED AS REQUIRED BY THE AUTHORITIES HAVING JURISDICTION AND AS REQUIRED TO LIMIT LEAKAGE. LEAKAGE IN EXCESS OF 5% SHALL NOT BE ACCEPTABLE.

E. DUCT DIMENSIONS ARE INSIDE CLEAR DIMENSIONS.

F. THE INTERIOR SURFACE OF ALL DUCTWORK SHALL BE SMOOTH WITH NO SHEETMETAL OR OTHER PARTS PROJECTING INTO THE AIR STREAM. ALL SEAMS AND JOINTS SHALL BE EXTERNAL. THE INSIDE OF ALL DUCTWORK SHALL BE THOROUGHLY CLEANED AND ALL FANS OPERATED TO REMOVE ANY DEBRIS PRIOR TO CONNECTION OF AIR DISTRIBUTION DEVICES.

G. ALL DUCTWORK DIMENSIONS ON THE DRAWINGS ARE CLEAR INSIDE

H. INSTALL ALL DUCTWORK TIGHT TO STRUCTURE UNLESS OTHERWISE NOTED. THE MECHANICAL CONTRACTOR SHALL COORDINATE WITH ALL OTHER TRADES PRIOR TO THE CONSTRUCTION OR INSTALLATION OF DUCTWORK.

I. ALL TRANSVERSE JOINTS SHALL BE SEALED WITH A WATER BASE ADHESIVE SEALER DESIGNED FOR USE IN MEDIUM VELOCITY DUCT SYSTEMS. SEALER SHALL BE EFFECTIVE AGAINST BOTH NEGATIVE AND POSITIVE PRESSURE LOSSES. SEALER SHALL HAVE A FLAME SPREAD RATING OF 25 OR LESS AND A SMOKE DEVELOPED RATING OF 50 OR LESS. APPLY UN-THINNED WITH BRUSH, TROWEL OR CAULKING GUN AS PER THE MANUFACTURER'S RECOMMENDATIONS AND ALLOW TO DRY FOR A MINIMUM OF 48 HOURS BEFORE AIR IS APPLIED TO THE SYSTEM. SEALER SHALL BE "IRON GRIP WATER BASE DUCT SEALANT #601" AS MANUFACTURED BY HARDCAST, INC., UNI-GRIP AS MANUFACTURED BY UNITED MCGILL, OR AN APPROVED EQUAL.

J. ALL ROUND TAKE-OFFS SHALL BE MADE WITH A DAMPER EXTRACTOR SPIN-IN COLLAR. SPIN-INS SHALL BE INSTALLED WITH THEIR DAMPER AXIS PARALLEL TO AIR FLOW.

K. ALL DUCTWORK SUPPORTS SHALL BE PER TABLE 5-1 OF THE SMACNA MANUAL WITH ALL SUPPORTS DIRECTLY ANCHORED TO THE BUILDING STRUCTURE. SUPPORTS SHALL BE ON MAXIMUM 8'-0" CENTERS WITH ADDITIONAL SUPPORTS AS REQUIRED TO PREVENT SAGGING.

L. FLEXIBLE DUCT FABRIC CONNECTIONS SHALL BE INSTALLED ON THE INLET AND OUTLET CONNECTIONS TO ALL POWERED AIR MOVING EQUIPMENT WHICH IS NOT CONNECTED WITH FLEXIBLE DUCT. A MINIMUM OF 1" OF SLACK SHALL BE ALLOWED IN ALL FLEXIBLE CONNECTIONS TO INSURE VIBRATION ISOLATION. FLEXIBLE FABRIC SHALL BE A MINIMUM OF 3 INCHES WIDE WITH "GRIP-LOC" SEAM TO 24 GAUGE GALVANIZED METAL SIDE CONNECTORS A MINIMUM OF 3 INCHES WIDE EACH. FLEXIBLE CONNECTION ARE TO FABRICATED WITH ELGEN "ZIPPERLOCK" #ZLN-4 NEOPRENE COATED 30 OZ. FIBERGLASS WITH 24 GAUGE GALVANIZED IRON SIDE CONNECTORS, OR DURO DYNE EXCELON "METAL-FAB" VINYL COATED 22 OZ. NYLON WITH 24 GAUGE GALVANIZED IRON SIDE CONNECTORS OR "APPROVED EQUAL".

M. INSTALL MANUAL SPLITTER DAMPERS IN BRANCH TAKE-OFFS WHERE SHOWN. SPLITTER DAMPERS SHALL BE MINIMUM 16 GAUGE GALVANIZED SHEET METAL AND SHALL BE 3/4 OF THE WIDTH OF THE SMALLEST TAKE-OFF BUT NO LESS THAN 6" LONG. DAMPERS SHALL HAVE 1/8" OF CLEARANCE TO THE DUCT IN WHICH THEY ARE INSTALLED. SPLITTER DAMPERS SHALL BE CONTROLLED BY ONE OR MORE CONTROL RODS IN ACCORDANCE WITH FIG. 2-5 OF THE SMACNA MANUAL. WHERE SPLITTERS ARE IN CONCEALED INACCESSIBLE LOCATIONS, SUBMIT PROPOSED CONTROL ROD DETAILS FOR APPROVAL.

N. DUCTWORK WHICH IS EXPOSED TO WEATHER SHALL HAVE SOLDERED JOINTS AND SEAMS AND SHALL BE PAINTED WITH A SUITABLE EPOXY COATING.

FLEXIBLE DUCIWORK

A. FLEXIBLE DUCT SHALL BE USED FOR CONNECTIONS TO AIR DISTRIBUTION DEVICES WHERE SHOWN ON THE DRA'MNGS OR SPECIFIED HEREIN. MAXIMUM LENGTH SHALL BE 8'-0" FOR AIR DISTRIBUTION DEVICE CONNECTIONS. WHERE LONGER RUNS ARE REQUIRED, PROVIDE RIGID DUCTWORK.

B. INSULATED FLEXIBLE DUCT SHALL BE A FACTORY FABRICATED ASSEMBLY CONSISTING OF A GALVANIZED STEEL OR SPIRAL ALUMINUM HELIX. STAINLESS INNER LINER SHALL BE COMPOSED OF 3-PLY ALUMINUM FOIL OR HEAVILY COATED FIBERGLASS WITH A MAXIMUM THERMAL CONDUCTANCE OF .23 BTU/HR/SF /'F. THE ASSEMBLY SHALL BE SHEATHED IN A REINFORCED METALIZED VAPOR BARRIER OUTER JACKET.

C. THE FLEXIBLE DUCT ASSEMBLY SHALL BE SUITABLE FOR A MINIMUM OF 6" W.C. WORKING PRESSURE AND SHALL BE LISTED CLASS I BY THE UNDERWRITERS LABORATORY AT A FLAME SPREAD OF NOT OVER 25 AND A SMOKE DEVELOPED RATE OF NOT OVER 50. DUCTS SHALL ALSO COMPLY WITH NFPA STANDARD 90A.

D. FLEXIBLE DUCTS SHALL BE SUPPORTED IN SUCH A MANNER TO PREVENT SAGS AND KINKS. BENDS IN ANY LENGTH OF FLEXIBLE DUCT SHALL NOT EXCEED 90' FOR AIR DISTRIBUTION DEVICE CONNECTIONS.

E. ALL JOINTS AND CONNECTIONS SHALL BE MADE WITH 1/2'' WIDE STAINLESS STEEL DUCT CLAMPS OR 100% NYLON SELF-LOCKING CLAMPS MANUFACTURED BY PANDUIT CORPORATION OR AN APPROVED EQUAL.

F. IF IT COMPLIES WITH THESE SPECIFICATIONS, FLEXIBLE DUCTWORK OF THE FOLLOWING TYPES WILL BE ACCEPTABLE:

FLEXMASTER TYPE 8M OR APPROVED EQUAL (EQUIVALENT TO R6).

CONTROLS

PROVIDE ALL TEMPERATURE CONTROLS MODIFICATIONS REQUIRED FOR A COMPLETE AND FUNCTIONING CONTROLS SYSTEM. ALL CONTROLS SHALL MATCH BUILDING STANDARD.

CHILLED WATER/ CONDENSATE PIPING

A. CONDENSATE-DRAIN PIPING: TYPE M (C) DRAWN-TEMPER COPPER TUBING, WROUGHT -COPPER FITTINGS, AND SOLDERED JOINTS.

B. CONDENSATE AND EQUIPMENT DRAIN WATER BELOW 60 DEG F (16 DEG C):

1. ALL PIPE SIZES: INSULATION SHALL BE ONE OF THE FOLLOWING: MINERAL-FIBER, PREFORMED PIPE INSULATION, TYPE 1: 1 INCH (25 MM) THICK.

DUCT LINER

A. FIBROUS-GLASS DUCT LINER: COMPLY WITH ASTM C 1071, NFPA 90A, OR NFPA 90B; AND WITH NAIMA AH124, "FIBROUS GLASS DUCT LINER STANDARD."

B. MAXIMUM THERMAL CONDUCTIVITY: TYPE I, FLEXIBLE: 0.27 BTU X IN./H X SQ. FT. X DEG F (0.039 W/M X K) AT 75 DEG F (24 DEG C) MEAN TEMPERATURE. R6 EQUIVALENT. TYPE II, RIGID: 0.23 BTU X IN./H X SQ. FT. X DEG F (0.033 W/M X K) – R6 EQUIVALENT. ANTIMICROBIAL EROSION-RESISTANT COATING: APPLY TO THE SURFACE OF THE LINER THAT WILL FORM THE INTERIOR SURFACE OF THE DUCT TO ACT AS A MOISTURE REPELLENT AND EROSION-RESISTANT COATING. ANTIMICROBIAL COMPOUND SHALL BE TESTED FOR EFFICACY BY AN NRTL AND REGISTERED BY THE EPA FOR USE IN HVAC SYSTEMS. WATER-BASED LINER ADHESIVE: COMPLY WITH NFPA 9DA OR NFPA 9DB AND WITH ASTM C 916. FOR INDOOR APPLICATIONS, USE ADHESIVE THAT HAS A VOC CONTENT OF 80 G/L OR LESS WHEN CALCULATED ACCORDING TO 40 CFR 59, SUBPART D (EPA METHOD 24).

C. SHOP APPLICATION OF DUCT LINER: COMPLY WITH SMACNA'S "HVAC DUCT CONSTRUCTION STANDARDS – METAL AND FLEXIBLE," FIGURE 7-11, "FLEXIBLE DUCT LINER INSTALLATION." ADHERE A SINGLE LAYER OF INDICA TED THICKNESS OF DUCT LINER WITH 100 PERCENT ADHESIVE COVERAGE AT LINER CONTACT SURFACE AREA. ATTAINING INDICATED THICKNESS WITH MULTIPLE LAYERS OF DUCT LINER IS PROHIBITED.

DUCT INSULATION

A. MINERAL-FIBER BLANKET INSULATION: MINERAL OR GLASS FIBERS BONDED WITH A THERMOSETTING RESIN. COMPLY WITH ASTM C 553, TYPE II AND ASTIM C 1290, TYPE III WITH FACTORY-APPLIED FSK JACKET. EQUIVALENT TO R-6. PRODUCTS: SUBJECT TO COMPLIANCE WITH REQUIREMENTS, PROVIDE ONE OF THE FOLLOWING:

1. CERTAINTEED CORP.; SOFTTOUCH DUCT WRAP.
2. JOHNS MANVILLE; MICROLITE.
3. KNAUF INSULATION; FRIENDLY FEEL DUCT WRAP.
4. MANSON INSULATION INC.; ALLEY WRAP.
5. OWENS CORNING; SOFTR ALL-SERVICE DUCT WRAP.

B. MINERAL -FIBER ADHESIVE: COMPLY WITH MIL -A-3316C, CLASS 2, GRADE A. PRODUCTS: SUBJECT TO COMPLIANCE WITH REQUIREMENTS, PROVIDE ONE OF THE FOLLOWING:

1. CHILDERS BRAND, SPECIALTY CONSTRUCTION BRANDS, INC., A BUSINESS OF H. B. FULLER COMPANY; CP-127.
2. EAGLE BRIDGES – MARATHON INDUSTRIES; 225.
3. FOSTER BRAND, SPECIALTY CONSTRUCTION BRANDS, INC., A BUSINESS OF H. B. FULLER COMPANY; 85-60/85-70.
4. MON-ECO INDUSTRIES, INC.; 22-25.

FOR INDOOR APPLICATIONS, USE ADHESIVE THAT HAS A VOC CONTENT OF 80 G/L OR LESS WHEN CALCULATED ACCORDING TO 40 CFR 59, SUBPART D (EPA METHOD 24).

CASJ ADHESIVE, AND FSK JACKET ADHESIVE: COMPLY WITH MIL-A-3316C, CLASS 2, GRADE A FOR BONDING INSULATION JACKET LAP SEAMS AND JOINTS. PRODUCTS: SUBJECT TO COMPLIANCE WITH REQUIREMENTS, PROVIDE ONE OF THE FOLLOWING:

1. CHILDERS BRAND, SPECIALTY CONSTRUCTION BRANDS, INC., A BUSINESS OF H. B. FULLER COMPANY; CP-82.
2. EAGLE BRIDGES – MARATHON INDUSTRIES; 225.
3. FOSTER BRAND, SPECIALTY CONSTRUCTION BRANDS, INC., A BUSINESS OF H. B. FULLER COMPANY; 85-50.
4. MON-ECO INDUSTRIES, INC.; 22-25.

FOR INDOOR APPLICATIONS, USE ADHESIVE THAT HAS A VOC CONTENT OF 50 G/L OR LESS WHEN CALCULATED ACCORDING TO 40 CFR 59, SUBPART D (EPA METHOD 24).

DMASTICS

MATERIALS SHALL BE COMPATIBLE WITH INSULATION MATERIALS, JACKETS, AND SUBSTRATES; COMPLY WITH MIL-PRF-19565C, TYPE II.

1. FOR INDOOR APPLICATIONS, USE MASTICS THAT HAVE A VOC CONTENT OF 50 G/L OR LESS WHEN CALCULATED ACCORDING TO 40 CFR 59, SUBPART D (EPA METHOD 24).

EVAPOR-BARRIER MASTIC: WATER BASED; SUITABLE FOR INDOOR USE ON BELOW AMBIENT SERVICES. PRODUCTS: SUBJECT TO COMPLIANCE WITH REQUIREMENTS, PROVIDE ONE OF THE FOLLOWING:

1. FOSTER BRAND, SPECIALTY CONSTRUCTION BRANDS, INC., A BUSINESS OF H. B. FULLER COMPANY; 30-80/30-90.
2. VIMASCO CORPORATION; 7 49.

WATER-VAPOR PERMANENT: ASTM E 96/E 96M, PROCEDURE B, 0.013 PERM (0.009 METRIC PERM) AT 43-MIL (1.09-MM) DRY FILM THICKNESS. SERVICE TEMPERATURE RANGE: MINUS 20 TO PLUS 180 DEG F (MINUS 29 TO PLUS 82 DEG C). SOLIDS CONTENT: ASTM D 1644, 58 PERCENT BY VOLUME AND 70 PERCENT BY WEIGHT. COLOR: WHITE.

F SEALANTS

FSX AND METAL JACKET FLASHING SEALANTS: PRODUCTS: SUBJECT TO COMPLIANCE WITH REQUIREMENTS, PROVIDE ONE OF THE FOLLOWING:

1. CHILDERS BRAND, SPECIALTY CONSTRUCTION BRANDS, INC., A BUSINESS OF H. B. FULLER COMPANY; CP-76.
2. EAGLE BRIDGES – MARATHON INDUSTRIES; 405.
3. FOSTER BRAND, SPECIALTY CONSTRUCTION BRANDS, INC., A BUSINESS OF H. B. FULLER COMPANY; 95-44.
4. MON-ECO INDUSTRIES, INC.; 44-05. MATERIALS SHALL BE COMPATIBLE WITH INSULATION MATERIALS, JACKETS, AND SUBSTRATES. FIRE- AND WATER-RESISTANT, FLEXIBLE, ELASTOMERIC SEALANT. SERVICE TEMPERATURE RANGE: MINUS 40 TO PLUS 250 DEG F (MINUS 40 TO PLUS 121 DEG C).

COLOR: ALUMINUM.

FOR INDOOR APPLICATIONS, USE SEALANTS THAT HAVE A VOC CONTENT OF 420 G/L OR LESS WHEN CALCULATED ACCORDING TO 40 CFR 59, SUBPART D (EPA METHOD 24).

GFSK TAPE: FOIL-FACE, VAPOR-RETARDER TAPE MATCHING FACTORY-APPLIED JACKET WITH

ACRYLIC ADHESIVE; COMPLYING WITH ASTIM C 1136. PRODUCTS: SUBJECT TO COMPLIANCE WITH REQUIREMENTS, PROVIDE ONE OF THE FOLLOWING:

1. ABI, IDEAL TAPE DIVISION; 491 AWF FSK.
2. AVERY DENNISON CORPORATION, SPECIALTY TAPES DIVISION; FASSON 0827.
3. COMPAC CORPORATION; 110 AND 111.
4. VENTURE TAPE; 1525 CW NT, 1528 CW, AND 1528 CW/SQ.

WIDTH: 3 INCHES (75 MM).

THICKNESS: 6.5 MILS (0.16 MM).

ADHESION: 90 OUNCES FORCE/INCH (1.0 N/MM) IN WIDTH.

ELONGATION: 2 PERCENT.

TENSILE STRENGTH: 40 LBF /INCH (7.2 N/MM) IN WIDTH.

FSK TAPE DISKS AND SQUARES: PRECUT DISKS OR SQUARES OF FSK TAPE.

I. 1-SECUREMENTS

BANDS:

PRODUCTS: SUBJECT TO COMPLIANCE WITH REQUIREMENTS, PROVIDE ONE OF THE FOLLOWING:

1. ITW INSULATION SYSTEMS; GERRARD STRAPPING AND SEALS.
2. RPR PRODUCTS, INC.; INSUL-MATE STRAPPING, SEALS, AND SPRINGS. ALUMINUM: ASTM B 209 (ASTIM B 209M), ALLOY 3003, 3005, 3105, OR 5005; TEMPER H-14, 0.020 INCH (0.51 MM) THICK, 1/2 INCH (13 MM) WIDE WITH WING SEAL OR CLOSED SEAL.

COUNTY APPROVAL:
SIGNATURE ____________________________ DATE____________

I. INSULATION PINS AND HANGERS:

CAPACITOR-DISCHARGE-WELD PINS: COPPER- OR ZINC-COATED STEEL PIN, FULLY ANNEALED FOR CAPACITOR-DISCHARGE WELDING, 0.106-INCH- (2.6-MM-) DIAMETER SHANK, LENGTH TO SUIT DEPTH OF INSULATION INDICATED. PRODUCTS: SUBJECT TO COMPLIANCE WITH REQUIREMENTS, PROVIDE ONE OF THE FOLLOWING:

1. AGM INDUSTRIES, INC.; CWP-1.
2. GEMCO; CD.
3. MIDWEST FASTENERS, INC.; CD.
4. NELSON STUD WELDING; TPA, TPC, AND TPS.

JINSTALLATION OF MINERAL-FIBER INSULATION:

BLANKET INSULATION INSTALLATION ON DUCTS AND PLENUMS: SECURE 'MTH ADHESIVE AND INSULATION PINS. APPLY ADHESIVES ACCORDING TO MANUFACTURER'S RECOMMENDED COVERAGE RATES PER UNIT AREA, FOR 100 PERCENT COVERAGE OF DUCT AND PLENUM SURFACES. APPLY ADHESIVE TO ENTIRE CIRCUMFERENCE OF DUCTS AND TO ALL SURFACES OF FITTINGS AND TRANSITIONS. INSTALL EITHER CAPACITOR-DISCHARGE-WELD PINS AND SPEED WASHERS OR CUPPED-HEAD, CAPACITOR-DISCHARGE-WELD PINS ON SIDES AND BOTTOM OF HORIZONTAL DUCTS AND SIDES OF VERTICAL DUCTS AS FOLLOWS:

1. ON DUCT SIDES WITH DIMENSIONS 18 INCHES (450 MM) AND SMALLER, PLACE PINS ALONG LONGITUDINAL CENTERLINE OF DUCT. SPACE 3 INCHES (75 MM) MAXIMUM FROM INSULATION END JOINTS, AND 16 INCHES (400 MM) O.C.
2. ON DUCT SIDES 'MTH DIMENSIONS LARGER THAN 18 INCHES (450 MM), PLACE PINS 16 INCHES (400 MM) D.C. EACH WAY, AND 3 INCHES (75 MM) MAXIMUM FROM INSULATION JOINTS. INSTALL ADDITIONAL PINS TO HOLD INSULATION TIGHTLY AGAINST SURFACE AT CROSS BRACING.
3. PINS MAY BE OMITTED FROM TOP SURFACE OF HORIZONTAL, RECTANGULAR DUCTS AND PLENUMS.
4. DO NOT OVERCOMPRESS INSULATION DURING INSTALLATION.
5. IMPALE INSULATION OVER PINS AND ATTACH SPEED WASHERS.
6. CUT EXCESS PORTION OF PINS EXTENDING BEYOND SPEED WASHERS OR BEND PARALLEL WITH INSULATION SURFACE. COVER EXPOSED PINS AND WASHERS WITH TAPE MATCHING INSULATION FACING.

FOR DUCTS AND PLENUMS WITH SURFACE TEMPERATURES BELOW AMBIENT, INSTALL A CONTINUOUS UNBROKEN VAPOR BARRIER. CREATE A FACING LAP FOR LONGITUDINAL SEAMS AND END JOINTS WITH INSULATION BY REMOVING 2 INCHES (50 MM) FROM ONE EDGE AND ONE END OF INSULATION SEGMENT. SECURE LAPS TO ADJACENT INSULATION SECTION WITH 1/2-INCH (13-MM) OUTWARD-CLINCHING STAPLES, 1 INCH (25 MM) D.C. INSTALL VAPOR BARRIER CONSISTING OF FACTORY- OR FIELD-APPLIED JACKET, ADHESIVE, VAPOR-BARRIER MASTIC, AND SEALANT AT JOINTS, SEAMS, AND PROTRUSIONS.

1. REPAIR PUNCTURES, TEARS, AND PENETRATIONS WITH TAPE OR MASTIC TO MAINTAIN VAPOR-BARRIER SEAL.
2. INSTALL VAPOR STOPS FOR DUCTWORK AND PLENUMS OPERATING BELOW 50 DEG F (1 DEG C) AT 18-FOOT (5.5-M) INTERVALS. VAPOR STOPS SHALL CONSIST OF VAPOR-BARRIER MASTIC APPLIED IN A Z-SHAPED PATTERN OVER INSULATION FACE, ALONG BUTT END OF INSULATION, AND OVER THE SURFACE. COVER INSULATION FACE AND SURFACE TO BE INSULATED A WIDTH EQUAL TO TWO TIMES THE INSULATION THICKNESS, BUT NOT LESS THAN 3 INCHES (75 MM).

OVERLAP UNFACED BLANKETS A MINIMUM OF 2 INCHES (50 MM) ON LONGITUDINAL SEAMS END JOINTS. AT END JOINTS, SECURE WITH STEEL BANDS SPACED A MAXIMUM OF 18 INCHES (450 MM) O.C. INSTALL INSULATION ON RECTANGULAR DUCT ELBOWS AND TRANSITIONS WITH A FULL INSULATION SECTION FOR EACH SURFACE. INSTALL INSULATION ON ROUND AND FLAT-OVAL DUCT ELBOWS WITH INDIVIDUALLY MITERED GORES CUT TO FIT THE ELBOW. INSULATE DUCT STIFFENERS, HANGERS, AND FLANGES THAT PROTRUDE BEYOND INSULATION SURFACE WITH 6-INCH- (150-MM-) WIDE STRIPS OF SAME MATERIAL USED TO INSULATE DUCT. SECURE ON ALTERNATING SIDES OF STIFFENER, HANGER, AND FLANGE WITH PINS SPACED 6 INCHES (150 MM) D.C.

GALVESTON COUNTY
BEACH PAVILION
CRYSTAL BEACH, TX 77650

BE-Arc LLC Project No : C-13-007.01

Ibis Engineering
REG # F-11156
P.O. Box 55171
Galveston, Texas 77555
PH 409.621.6740

THIS PRINT IS THE PROPERTY OF IBIS ENGINEERING IT MUST NOT BE TRACED OR REPRODUCED IN ANY MANNER NOR SHALL IT BE SUBMITTED WITHOUT PRIOR WRITTEN CONSENT FROM IBIS ENGINEERING.

BRAX EASTERWOOD
DESIGN
2728 AVENUE Q SUITE 2
GALVESTON TEXAS 77550
PHONE 409-354-8976
EASTERWOOD@BEAIA.COM

DESIGN REVIEW

DATE	REVISION

DESIGN DEVELOPMENT

DATE ISSUED:
9/28/2017

COPYRIGHT 2017

M3.0

COUNTY APPROVAL:
SIGNATURE _____ DATE_____

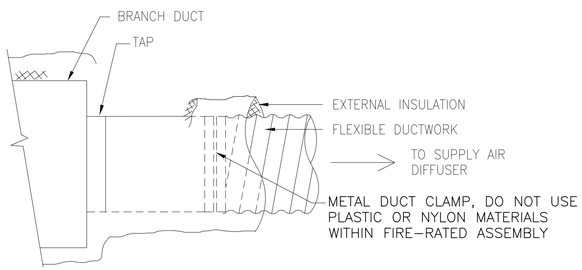

FLEXIBLE DUCT TAP
SCALE: NONE

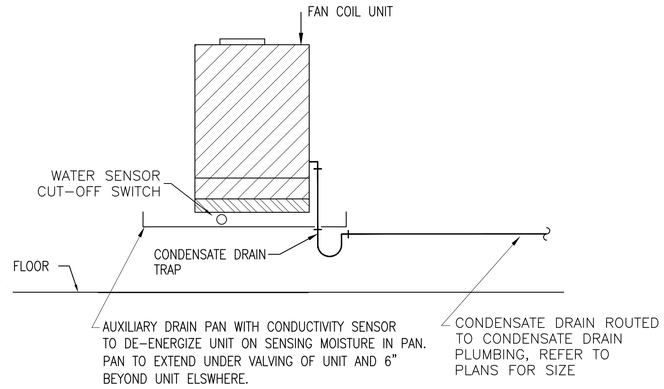

CONDENSATE DRAIN
SCALE: NONE

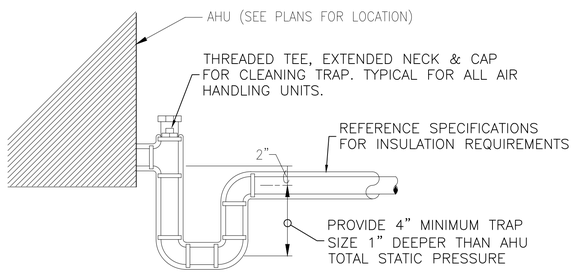

5 CONDENSATE DRAIN PIPING AT FCU
SCALE: NONE

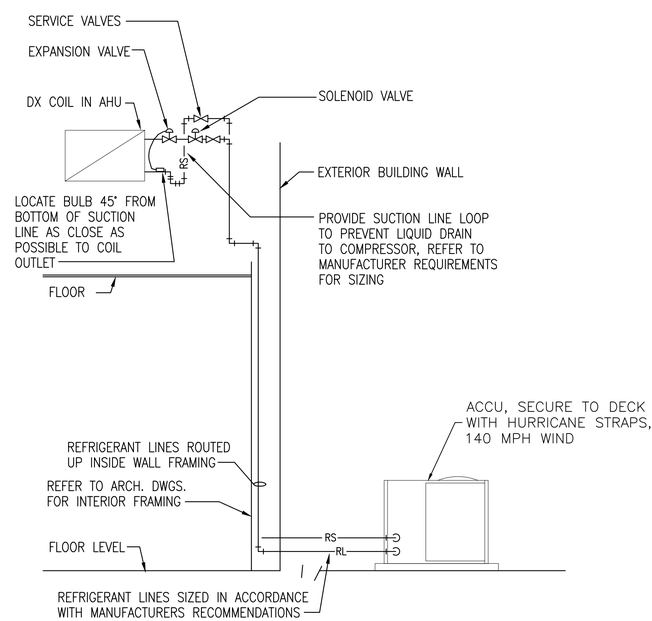

REFRIGERANT PIPING DETAIL
SCALE: NONE

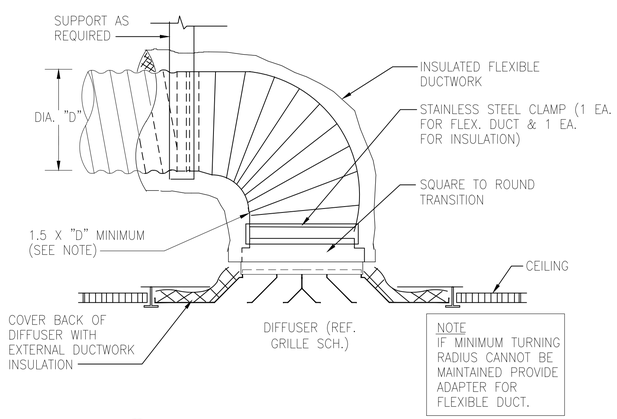

1 FLEX DUCT DETAIL
Scale: N.T.S.

GALVESTON COUNTY
BEACH PAVILION
CRYSTAL BEACH, TX 77650

BE-Arc LLC Project No : C-13-007.01

bis Engineering
REG # F-11156
P.O. Box 537
Galveston, TX 77555
PH 409.621.5740

THIS PRINT IS THE PROPERTY OF BIS ENGINEERING IT MAY NOT BE TRACED OR REPRODUCED IN ANY FORM OR MANNER IT BE SUBMITTED WITHOUT PRIOR WRITTEN CONSENT FROM BIS ENGINEERING.

BRAX EASTERWOOD
DESIGN
2728 AVENUE Q SUITE 2
GALVESTON TEXAS 77550
PHONE 409-354-8976
EASTERWOOD@EAIA.COM

DESIGN REVIEW

DATE	REVISION

DESIGN DEVELOPMENT

DATE ISSUED:
9/28/2017

COPYRIGHT 2017

M4.0

COUNTY APPROVAL:
SIGNATURE _____ DATE _____

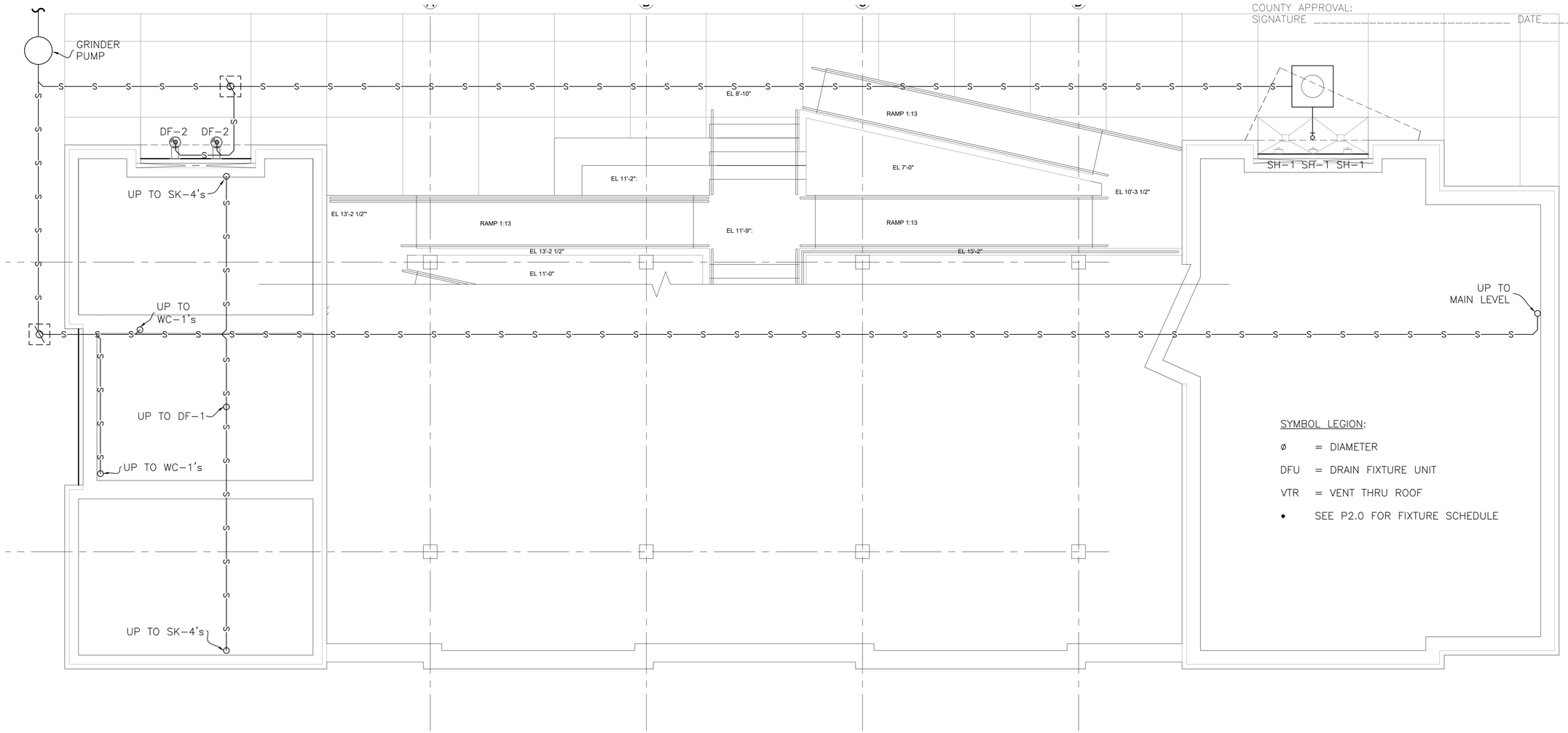

SYMBOL LEGION:

ø = DIAMETER

DFU = DRAIN FIXTURE UNIT

VTR = VENT THRU ROOF

• SEE P2.0 FOR FIXTURE SCHEDULE

1 LOWER LEVEL POWER PLAN
SCALE: 1/4" = 1'-0"

GALVESTON COUNTY BEACH PAVILION CRYSTAL BEACH, TX 77650

BE-Arc LLC Project No : C-13-007.01

bis Engineering
REG # F-11156
P.O. Box 357
Galveston, TX 77555
PH 409.621.5740

THIS PRINT IS THE PROPERTY OF BIS ENGINEERING IT MAYS NOT BE TRACED, OR REPRODUCED, IN WHOLE OR IN PART, OR ISSUED TO ANY OTHER PARTY IF IT IS SUBMITTED WITHOUT PRIOR WRITTEN CONSENT FROM BIS ENGINEERING.

BRAX EASTERWOOD DESIGN
2728 AVENUE Q SUITE 2
GALVESTON TEXAS 77550
PHONE 409-354-8976
EASTERWOOD@BEAIA.COM

DESIGN REVIEW

DATE	REVISION

DESIGN DEVELOPMENT

DATE ISSUED:
9/28/2017

COPYRIGHT 2017

P1.0

COUNTY APPROVAL:
SIGNATURE _____ DATE_____

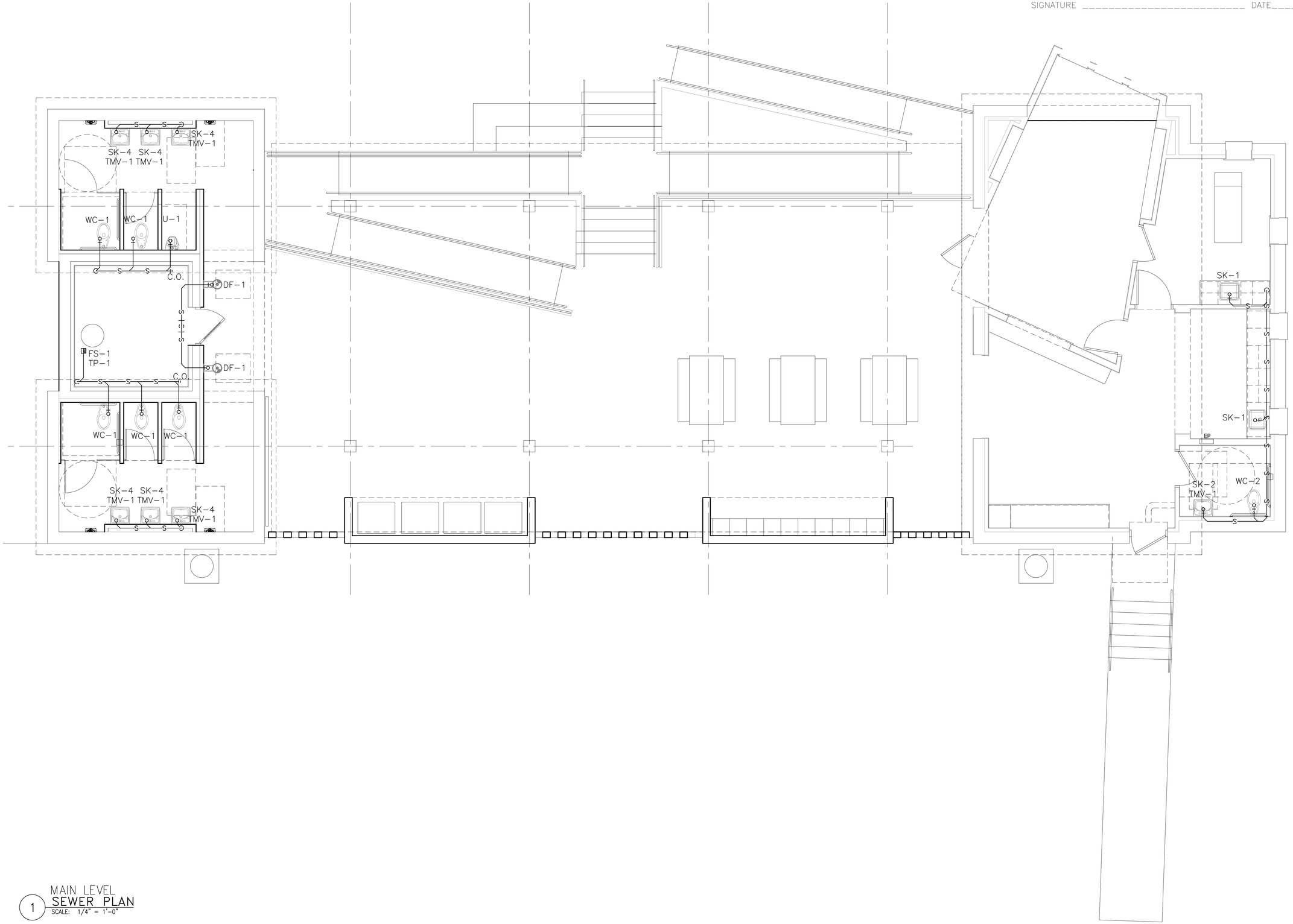

1 MAIN LEVEL
SEWER PLAN
SCALE: 1/4" = 1'-0"

GALVESTON COUNTY
BEACH PAVILION
CRYSTAL BEACH, TX 77650

BE-Arc LLC Project No : C-13-007.01

bis Engineering
REG # F-11156
P.O. Box 357
Galveston, TX 77555
PH 409.621.6740

THIS PROJECT IS THE PROPERTY OF BIS ENGINEERING IT MAY NOT BE TRACED, OR REPRODUCED, IN WHOLE OR IN PART, OR DISCLOSED TO ANY OTHER PARTY IF IT IS SUBMITTED WITHOUT PRIOR WRITTEN CONSENT FROM BIS ENGINEERING.

BRAX EASTERWOOD
DESIGN
2728 AVENUE Q SUITE 2
GALVESTON TEXAS 77550
PHONE 409-354-8976
EASTERWOOD@BEAIA.COM

DESIGN REVIEW

DATE	REVISION

DESIGN DEVELOPMENT

DATE ISSUED:
9/28/2017

COPYRIGHT 2017

P1.1

COUNTY APPROVAL:
SIGNATURE _____ DATE_____

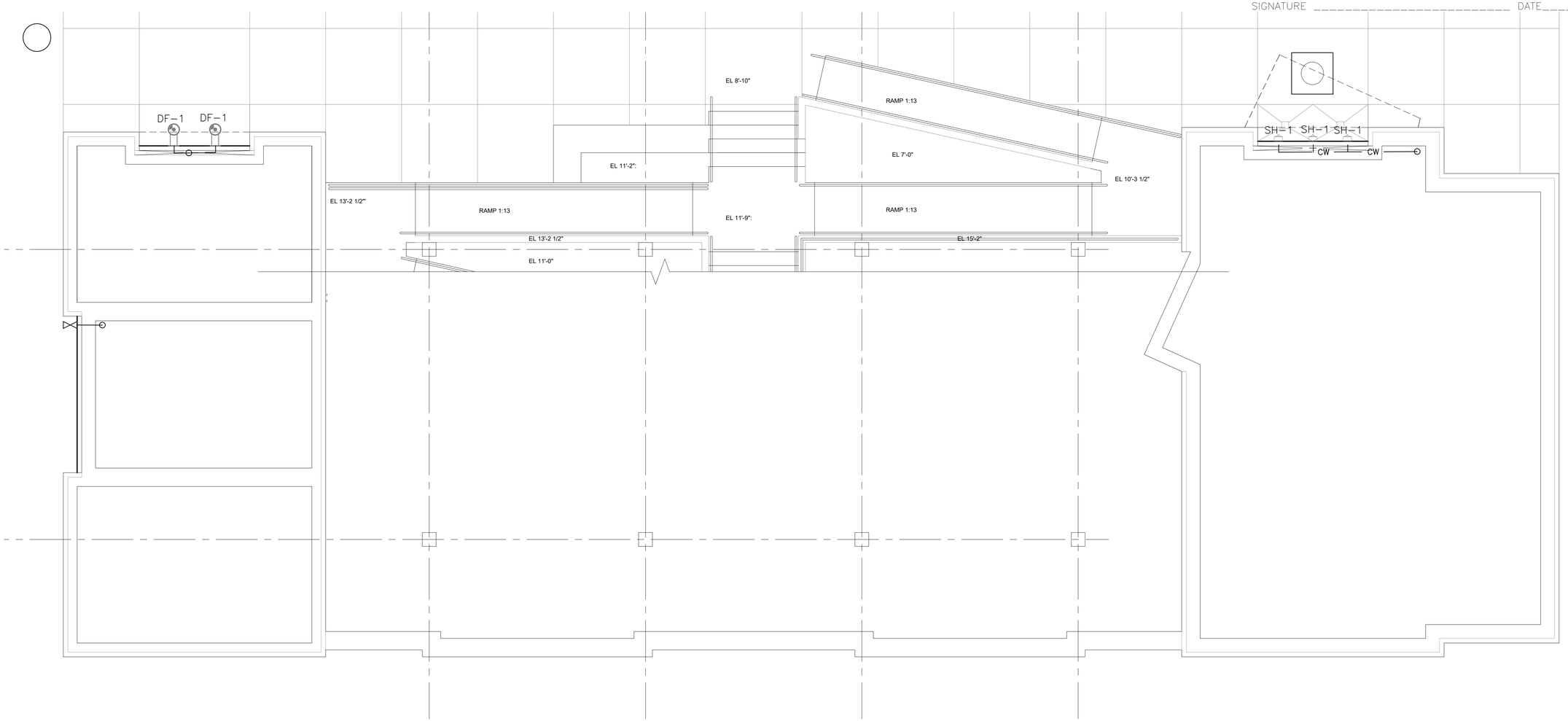

1 LOWER LEVEL
HOT & COLD WATER PLAN
SCALE: 1/4" = 1'-0"

GALVESTON COUNTY BEACH PAVILION CRYSTAL BEACH, TX 77650

BE-Arc LLC Project No : C-13-007.01

bis Engineering
REG # F-11156
P.O. Box 1577
Galveston, TX 77555
PH 409.621.5740

THIS PRINT IS THE PROPERTY OF BIS ENGINEERING IT MAYS NOT BE TRACED, OR REPRODUCED IN ANY FORM OR MANNER, NOR TO BE SUBMITTED TO ANY PERSON OR IT BE SUBMITTED WITHOUT PRIOR WRITTEN CONSENT FROM BIS ENGINEERING.

BRAX EASTERWOOD
DESIGN
2728 AVENUE Q SUITE 2
GALVESTON TEXAS 77550
PHONE 409-354-8976
EASTERWOOD@BEAIA.COM

DESIGN REVIEW

DATE	REVISION

DESIGN DEVELOPMENT

DATE ISSUED:
9/28/2017

COPYRIGHT 2017

P1.2

COUNTY APPROVAL:
SIGNATURE _____ DATE_____

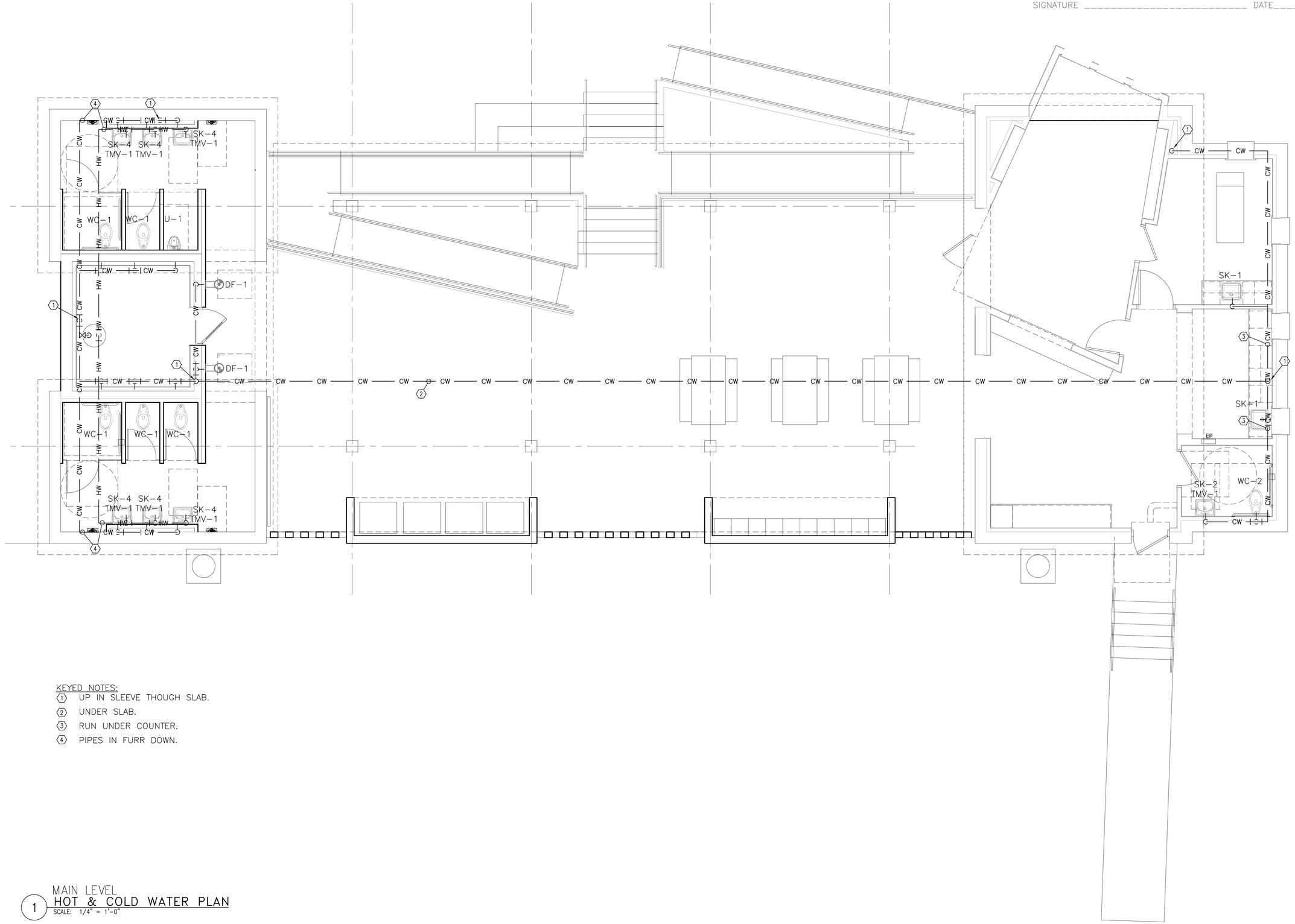

KEYED NOTES:

1. UP IN SLEEVE THOUGH SLAB.
2. UNDER SLAB.
3. RUN UNDER COUNTER.
4. PIPES IN FURR DOWN.

1 MAIN LEVEL
HOT & COLD WATER PLAN
SCALE: 1/4" = 1'-0"

GALVESTON COUNTY
BEACH PAVILION
CRYSTAL BEACH, TX 77650

BE-Arc LLC Project No : C-13-007.01

bis Engineering
REG # F-11156
P.O. Box 537
Galveston, Texas 77555
PH 409.621.5740
THIS PRINT IS THE PROPERTY OF BIS ENGINEERING IT MAY NOT BE TRACED OR REPRODUCED IN ANY FORM OR MANNER WHATSOEVER, NOR LOANED OUT, NOR SHOWN TO ANY PERSON NOT ENTITLED TO IT, BE SUBMITTED WITHOUT PRIOR WRITTEN CONSENT FROM BIS ENGINEERING.

BRAX EASTERWOOD
DESIGN
2728 AVENUE Q SUITE 2
GALVESTON TEXAS 77550
PHONE 409-354-8976
EASTERWOOD@BEAIA.COM

DESIGN REVIEW

DATE	REVISION

DESIGN DEVELOPMENT

DATE ISSUED:
9/28/2017

COPYRIGHT 2017

P1.3

PLUMBING FIXTURE SPECIFICATION

TYPE: SK-1
DESCRIPTION: DUKE MANUFACTURING, WALL MOUNTED, 10" X 14" X 6".
FAUCET: CHROME PLATED BRASS DECK MOUNTED FAUCET WITH 5" SPOUT, 4" WRIST BLADE HANDLES ON 8" CENTERS, QUARTER TURN OPERATING CARTRIDGES, VANDAL RESISTANT 2.2 GPM AERATOR. CHICAGO MODEL 404-317CP-E12VPJKCP.
STRAINER: CHROME PLATED BRASS GRID STRAINER WITH 6" LONG 17 GAUGE 1-1/4" TAILPIECE WITH LOCK NUT. CHICAGO 327-XCP.
P-TRAP: 1-1/4" CHROME PLATED CAST BRASS TRAP WITH CLEANOUT AND GROUND JOINT ELBOW AND SLIP NUTS. 1-1/4"CHROME PLATE CAST BRASS EXTENSION TO WALL WITH ESCUTCHEON PLATE. MCGUIRE 8088 AND 1127.
SUPPLIES: 1/2" I.P.S. X 3/8" O.D.CHROME PLATED LOOSE KEY STOP VALVE W/ ESCUTCHEON AND 3/8" COMPRESSION CHROME PLATED FLEXIBLE RISER. CHICAGO 1017.
ROUGH-IN: 2" WASTE, 2" VENT, 1/2" HOT AND COLD WATER. REFER TO ARCHITECTURAL DRAWINGS FOR HEIGHT REQUIREMENTS.

TYPE: SK-2 (T.A.S. COMPLAINT)
DESCRIPTION: LAVATORY, SINGLE HOLE, STAINLESS STEEL.
FIXTURE: JUST MFG. A-33338, SINGLE HOLE
FAUCET: SYMMONS S-60-H
STRAINER: JUST F-115FS DRAIN.
P-TRAP: CHROME PLATED 1-1/4" P-TRAP
SUPPLIES: 1/2" I.P.S. X 3/8" O.D.CHROME PLATED LOOSE KEY STOP VALVE W/ ESCUTCHEON AND 3/8" COMPRESSION CHROME PLATED FLEXIBLE RISER. CHICAGO 1017.
CARRIER: RECTANGULAR STEEL TUBING UPRIGHTS WITH WELDED 4" SQUARE BASE ANCHORED TO CONCRETE WITH (4) 1/2" BOLTS, ADJUSTABLE SLEEVE, THREADED CONCEALED ARMS, ALIGNMENT BAR, LOCKING DEVICE, AND LEVELING SCREWS. JR SMITH #0710.
ROUGH-IN: 2" WASTE, 2" VENT, 1/2" HOT AND COLD WATER. REFER TO ARCHITECTURAL DRAWINGS FOR HEIGHT REQUIREMENTS.

TYPE: SK-4 (T.A.S. COMPLAINT)
DESCRIPTIONI MERIDION 3711-H, HAND OPPERRATED OFF-FLOOR, W/ CARRIER DECK MOUNT SPOUT & BUTTON.

TYPE: DF-1 (T.A.S. COMPLAINT)
DESCRIPTION: SINGLE ACORN #1672, ADA, W/ CARRIER, SEE ARCH. DWG'S FOR MOUNTING HEIGHT.

TYPE: DF 2 (T.A.S. COMPLAINT)
DESCRIPTION: DOUBLE SEE ARCH. DWG'S.

TYPE: FD-1
SERVICE: TOILET ROOMS AND GENERAL USE
DESCRIPTION: FLOOR DRAIN, BOTTOM OUTLET CAST IRON BODY, ADJUSTABLE 6" DIAMETER NICKEL BRONZE STRAINER WITH VANDAL PROOF SCREWS, INTEGRAL CLAMPING DEVICE. WADE 1100-STD6-1.
TRAP SEAL: PROVIDE PRO-SET SYSTEMS, INC. TRAP GUARD FACTORY FITTED TO MATCH EACH FLOOR DRAIN BY SIZE, MODEL, AND MANUFACTURER.
ROUGH-IN: REFER TO FLOOR PLANS FOR SIZES. COORDINATE FINAL LOCATION AND INSTALLATION WITH ARCHITECTURAL DRAWINGS / FLOOR CONSTRUCTION.

TYPE: SH-1
DESCRIPTION: ACORN 1741FA, SINGLE TEMP. MANUAL PUSH BUTTON, 1.4 GPM

TYPE: TP-1
DESCRIPTION: TRAP PRIMERS SHALL BE PPP MODEL MPB-500 OR APPROVED PROVIDE PRO-SET SYSTEMS, INC. TRAP GUARD FACTORY FITTED TO MATCH EACH FLOOR DRAIN BY SIZE, MODEL, AND MANUFACTURER.

TYPE: TMV-1
DESCRIPTION: THERMOSTATIC MIXING VALVE. SCHEDULED ON DRAWINGS.

TYPE: WCO-1
DESCRIPTION: WALL CLEANOUT. CAST IRON CLEANOUT FERRULE, COUNTERSUNK BRASS PLUG AND ROUND STAINLESS COVER PLATE WITH CENTER SECURING SCREW. PROVIDE CAST IRON CLEANOUT TEE IN LIEU OF FERRULE AS REQUIRED FOR WALL CONSTRUCTION. WADE 8550E OR WADE 8560E WITH WADE 8480R.

TYPE: U-1
DESCRIPTION: ACORN LR 1709FG, 0.125 GPF, MECHANICAL FLUSH.

TYPE: WC-1 (T.A.S. COMPLAINT)
DESCRIPTION: ACORN 2115-W-2 ADA

TYPE: WC-2 (T.A.S. COMPLAINT)
DESCRIPTION: MERIDIAN #2141-3 S.S. TOILET SIPHON JET FLOOR OUTLET W/ SEAT, FRONT MOUNT TOP SPUD FLUSH VALVE ADA COMPLIANT W/ CARRIER.
ROUGH-IN: 3" WASTE, 2" VENT, 1" COLD WATER. REFER TO ARCHITECTURAL DRAWINGS FOR HEIGHT REQUIREMENTS.

GENERAL NOTES:
ALL LAVATORIES AND SINKS SHALL BE SUPPLIED WITH HOT AND COLD WATER TO FAUCETS AS INDICATED ON PLANS AND FIXTURE SCHEDULE. PROVIDE CHROME PLATED BRASS SUPPLY STOPS WITH LOOSE KEYS AND WALL ESCUTCHEONS. PROVIDE CHROME PLATED FLEXIBLE RISERS OF SIZE REQUIRED TO PROPERLY CONNECT FIXTURES. PROVIDE 17 GAUGE CHROME PLATED CAST BRASS P- TRAP WITH CLEANOUT AND EXTENSION TO WALL WITH ESCUTCHEON. REFER TO FIXTURE SCHEDULE FOR MINIMUM SIZES OF PLUMBING FIXTURE ROUGH-INS. PROVIDE MOLDED CLOSED CELL ANTI-MICROBIAL VINYL INSULATION KITS AT ALL LAVATORIES AND SINKS REQUIRED TO BE T.A.S. ACCESSIBLE (TRUEBRO LAV-GUARD 2 SERIES). ALL SUCH FIXTURES AND FINAL INSTALLATIONS SHALL COMPLY WITH THE STATE ACCESSIBILITY STANDARDS REQUIREMENTS.

Point of Use "Non-Thermostatic"

Single Point and Flow Controlled **(Designed for cold water feed only)**

Specifications
Electric Tankless Hot Water Heater

Applications

- Hand washing (0.35-2.0 GPM)
- Kitchen/bar/utility sinks
- Manufacturing facilities
- Hand set shower (0.7-2.0 GPM)
- Dual handwash sinks (DL option)
- Modular buildings and tenant spaces

Performance Features

- On demand hot water. Flow switch activates heater only on demand (no standby heat loss). 99% efficient
- Endless hot water – no storage capacity to run out
- Easy installation. No T&P relief valve needed (check local codes). Only one cold water line need be brought to installation, mounts on wall
- High temperature limit switch with automatic reset
- Optional flow restricting aerator (for EX-DL models) ensures proper temperature rise. Standard with SP models
- Prevents Legionella bacteria growth
- Reduces calcification, liming and sedimentation
- Complies with handicap ADA physical installation requirements
- Ni Chrome element – a unique, patented flow path ensures optimum heat transfer and extended element life
- Warranty – Heaters, against failure due to leaks of "Heater Body/Element Assembly", five (5) years – Parts, one (1) year

Pictured, EX: Bottom Water Connections

U.S. Patent #'s: 4,762,980 and 4,960,976

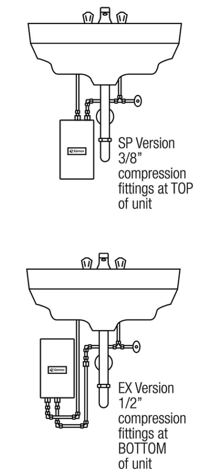

Series 1 Single Point and Flow Controlled

UL LISTED · Buy American Made in USA · NO LEAD* The wetted surface of this product contacted by water contains less than 0.25% lead and meets ANSI/NSF 372 · Autodesk 3-D REVIT Product Specs Now Available

Product Specifications

Dimensions:	10.75" x 5.25" x 2.78"
Weight:	4 lbs.
Cover:	ABS UL rated 94V0.
Color:	White
Element:	Replaceable cartridge insert
Fittings:	SP – 3/8" compression fitting at top of unit EX – 1/2" (5/8" OD) compression fitting at bottom of unit
Operating Pressure:	Min. 25 PSI, max. 150 PSI
UL listed file number:	E86887

U.S. Patent #'s: 4,762,980 and 4,960,976

Special Design Service

Inquiries for units for unique applications are welcome.
Call our Technical Service department at **1-800-543-6163**.

Suggested Specification

Tankless water heater shall be an Eemax Non-Thermostatic model number ___________.

Unit shall have ABS-UL 94V0 rated cover. Element shall be replaceable cartridge insert. Unit shall have replaceable filter in the inlet connector. Element shall be iron free, nickel chrome material. Water heater to be supplied with compression fittings. EX models will have 1/2 fittings on the bottom of unit, SP units to have 3/8" fittings on the top of unit. Maximum operating pressure of 150 PSI. Hot water storage tanks prohibited. Unit shall be Eemax or approved equal. NOTE: Refer to rating chart for product information.

Specification options available on EX models:

_____ **DL** Dual Lavs- supplied with two faucet aerators
_____ **SL** Single Lav – supplied with 3/8" compression fittings (0.5 or 1.0 GPM aerator included).
_____ **N4** NEMA 4 waterproof cabinet w/powder coat finish
_____ **N4X** NEMA 4 stainless steel waterproof corrosion-resistant cabinet

Point of Use "Non-Thermostatic"

Single Point and Flow Controlled (Designed for cold water feed only)

Specifications
Electric Tankless Hot Water Heater

Series 1 Single Point and Flow Controlled

	MODEL NUMBER	kW	AMPS	TURN ON (GPM)	RECOMMENDED WIRE SIZE (CU)	TEMPERATURE RISE °F 0.5 GPM	0.75 GPM	1.0 GPM	1.5 GPM
	VOLTS 120								
C	**SP2412†**	2.4kW	20A	0.3	12 AWG	33°	–	–	–
C	**EX2412**	2.4kW	20A	0.3	12 AWG	33°	–	–	–
C	**SP3012†**	3.0kW	25A	0.3	10 AWG	41°	–	–	–
C	**EX3012**	3.0kW	25A	0.3	10 AWG	41°	–	–	–
C	**SP3512†**	3.5kW	29A	0.3	10 AWG	48°	–	–	–
C	**EX3512**	3.5kW	29A	0.3	10 AWG	48°	–	–	–
	VOLTS 208 Single Phase								
C	**SP3208†**	3.0kW	15A	0.3	14 AWG	41°	–	–	–
C	**EX3208**	3.0kW	15A	0.3	14 AWG	41°	–	–	–
C	**SP4208†**	4.1kW	20A	0.3	12 AWG	56°	–	–	–
C	**EX4208**	4.1kW	20A	0.3	12 AWG	56°	–	–	–
C	**SP8208†**	8.3kW	40A	0.7	8 AWG	–	76°	57°	38°
C	**SP8208 DL†**	8.3kW	40A	0.7	8 AWG	–	76°	57°	38°
C	**EX8208**	8.3kW	40A	0.7	8 AWG	–	76°	57°	38°
C	**EX8208 DL**	8.3kW	40A	0.7	8 AWG	–	76°	57°	38°
	VOLTS 240*								
C	**SP35†**	3.5kW	15A	0.3	14 AWG	48°	32°	24°	16°
C	**SP35†** (derated 208V perf.)	2.7kW	13A	0.3	*	37°	24°	18°	15°
C	**EX35**	3.5kW	15A	0.3	14 AWG	48°	32°	24°	16°
C	**EX35** (derated 208V perf.)	2.7kW	13A	0.3	*	37°	24°	18°	15°
C	**EX35 SL**	3.5kW	15A	0.3	14 AWG	48°	32°	24°	16°
C	**SP48†**	4.8kW	20A	0.5	12 AWG	64°	42°	31°	21°
C	**SP48†** (derated 208V perf.)	3.6kW	17A	0.5	*	49°	33°	25°	16°
C	**SP48 DL**	4.8kW	20A	0.5	12 AWG	64°	42°	31°	21°
C	**EX48**	4.8kW	20A	0.5	12 AWG	64°	42°	31°	21°
C	**EX48** (derated 208V perf.)	3.6kW	17A	0.5	*	49°	33°	25°	16°
C	**EX48 SL**	4.8kW	20A	0.5	12 AWG	64°	42°	31°	21°
C	**EX48 DL**	4.8kW	20A	0.5	12 AWG	64°	42°	31°	21°
C	**SP55†**	5.5kW	23A	0.5	10 AWG	75°	50°	38°	25°
C	**SP55†** (derated 208V perf.)	4.1kW	20A	0.5	*	56°	38°	28°	19°
C	**SP55 DL†**	5.5kW	23A	0.5	10 AWG	75°	50°	38°	25°
C	**EX55**	5.5kW	23A	0.5	10 AWG	75°	50°	38°	25°
C	**EX55** (derated 208V perf.)	4.1kW	20A	0.5	*	56°	38°	28°	19°
C	**EX55 DL**	5.5kW	23A	0.5	10 AWG	75°	50°	38°	25°
C	**EX55 SL**	5.5kW	23A	0.5	10 AWG	75°	50°	38°	25°
C	**SP65†**	6.5kW	27A	0.7	10 AWG	–	59°	44°	30°
C	**SP65†** (derated 208V perf.)	4.9kW	24A	0.7	*	66°	44°	33°	22°
C	**SP65 DL†**	6.5kW	27A	0.7	10 AWG	–	59°	44°	30°
C	**EX65**	6.5kW	27A	0.7	10 AWG	–	59°	44°	30°
C	**EX65** (derated 208V perf.)	4.9kW	24A	0.7	*	66°	44°	33°	22°
C	**EX65 DL**	6.5kW	27A	0.7	10 AWG	–	59°	44°	30°
C	**EX65 SL**	6.5kW	27A	0.7	10 AWG	–	59°	44°	30°
C	**SP75†**	7.5kW	32A	0.7	8 AWG	–	68°	51°	34°
C	**SP75†** (derated 208V perf.)	5.6kW	27A	0.7	*	77°	51°	38°	26°
C	**SP75 DL†**	7.5kW	32A	0.7	8 AWG	–	68°	51°	34°
C	**EX75**	7.5kW	32A	0.7	8 AWG	–	68°	51°	34°
C	**EX75** (derated 208V perf.)	5.6kW	27A	0.7	*	77°	51°	38°	26°
C	**EX75 DL**	7.5kW	32A	0.7	8 AWG	–	68°	51°	34°
C	**EX75 SL**	7.5kW	32A	0.7	8 AWG	–	68°	51°	34°
C	**SP95†**	9.5kW	40A	0.7	8 AWG	–	87°	65°	43°
C	**SP95†** (derated 208V perf.)	7kW	34A	0.7	*	95°	64°	48°	32°
C	**SP95 DL†**	9.5kW	40A	0.7	8 AWG	–	87°	65°	43°
C	**EX95**	9.5kW	40A	0.7	8 AWG	–	87°	65°	43°
C	**EX95** (derated 208V perf.)	7kW	34A	0.7	*	95°	64°	48°	32°
C	**EX95 DL**	9.5kW	40A	0.7	8 AWG	–	87°	65°	43°
C	**EX95 SL**	9.5kW	40A	0.7	8 AWG	–	87°	65°	43°

MODEL NUMBER	kW	AMPS	TURN ON (GPM)	RECOMMENDED WIRE SIZE (CU)	TEMPERATURE RISE °F 0.5 GPM	0.75 GPM	1.0 GPM	1.5 GPM
VOLTS 277								
SP3277†	3.0kW	11A	0.3	14 AWG	41°	–	–	–
EX3277	3.0kW	11A	0.3	14 AWG	41°	–	–	–
SP4277†	4.1kW	14.8A	0.3	14 AWG	56°	37°	28°	19°
EX4277	4.1kW	14.8A	0.3	14 AWG	56°	37°	28°	19°
SP60†	6.0kW	22A	0.7	10 AWG	–	55°	41°	27°
SP60 DL†	6.0kW	22A	0.7	10 AWG	–	55°	41°	27°
EX60	6.0kW	22A	0.7	10 AWG	–	55°	41°	27°
EX60 SL	6.0kW	22A	0.7	10 AWG	–	55°	41°	27°
EX60 DL	6.0kW	22A	0.7	10 AWG	–	55°	41°	27°
SP80†	8.0kW	29A	0.7	10 AWG	–	73°	55°	36°
SP80 DL†	8.0kW	29A	0.7	10 AWG	–	73°	55°	36°
EX80	8.0kW	29A	0.7	10 AWG	–	73°	55°	36°
EX80 SL	8.0kW	29A	0.7	10 AWG	–	73°	55°	36°
EX80 DL	8.0kW	29A	0.7	10 AWG	–	73°	55°	36°
SP90†	9.0kW	33A	0.7	8 AWG	–	82°	61°	41°
SP90 DL†	9.0kW	33A	0.7	8 AWG	–	82°	61°	41°
EX90	9.0kW	33A	0.7	8 AWG	–	82°	61°	41°
EX90 SL	9.0kW	33A	0.7	8 AWG	–	82°	61°	41°
EX90 DL	9.0kW	33A	0.7	8 AWG	–	82°	61°	41°
SP100†	10kW	36A	0.7	8 AWG	–	91°	68°	46°
SP100 DL†	10kW	36A	0.7	8 AWG	–	91°	68°	46°
EX100	10kW	36A	0.7	8 AWG	–	91°	68°	46°
EX100 SL	10kW	36A	0.7	8 AWG	–	91°	68°	46°
EX100 DL	10kW	36A	0.7	8 AWG	–	91°	68°	46°

* 240V units can be used on 208V single phase with 25% reduced temperature output. Please note per UL standards the rating plate and installation instructions will all be according to a 240V applied voltage. Check with local officials prior to derating the electrical infrastructure.
† 3/8" compression fittings at top of unit
"C" indicates evaluation and compliance to either Underwriters Laboratories (UL) or Intertek (ETL) under CAN/CSA-C22.2 No. 64/No. 88.

Suffix Definitions

DL Dual Lavs – Two faucet aerators provided
SL Single Lav – 3/8" compression connections

"EX"

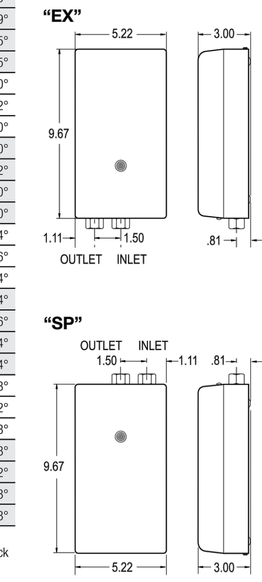

NEMA 4/4X
For EX version only. NEMA cabinets not available for SP version.

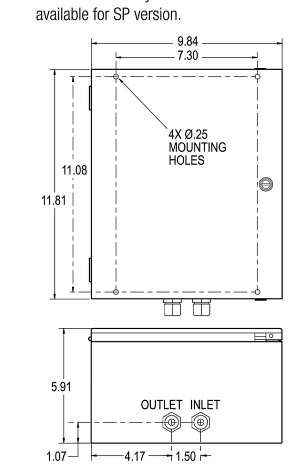

COUNTY APPROVAL:
SIGNATURE ______________________________ DATE______________

SYMMONS® the smart choice™

SCOT® S-60-H
Slow-Closing Omni Temperature Lavatory Faucet

SCOT *metering/temperature selection lavatory faucet with blade type handle for handicap accessible applications (replaces S-60 knob style handle). Cast brass 4" centerset with temperature limit stop to adjust outlet temperature and time limit stop to adjust flow time, includes (2) in-line check/screen assemblies. Spray outlet with 0.5 gpm flow rate. Vandal resistant.*

☐ **S-60-H: Faucet only**
☐ **S-60-G-H: With grid strainer drain assembly**
☐ **S-60-1-H: With lift rod only**

Modifications: *Add suffix to model number*
☐ **Suffix 1.25:** Vandal resistant aerator in place of 0.5 gpm spray outlet (1.25 GPM at 50 PSI)
☐ **Suffix 0.35:** Vandal resistant aerator in place of 0.5 gpm spray outlet (0.35 GPM at 50 PSI)
☐ **Suffix NA:** Non-aerated laminar flow outlet
☐ **Suffix IPS:** 1/2" IPS connectors
☐ **Suffix STE:** Supply tube extensions, 8" with compression couplings
☐ **Suffix DP:** Adaptor plate for 8" center installations
☐ **Suffix OFG:** Offset grid strainer

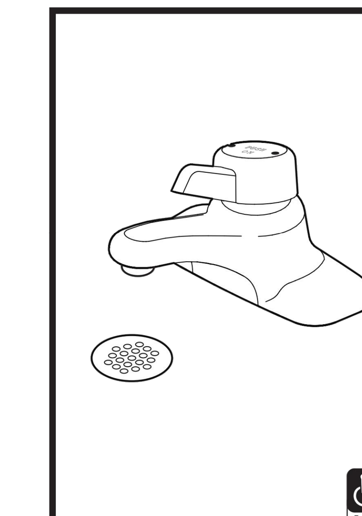

SYMMONS PRODUCTS MEET ASME A112.18.1; CSA B125.1 ANSI/NSF 372; ANSI/NSF 61.9 Metering Faucets 0.25 gallons per cycle (1.0 L/cycle)

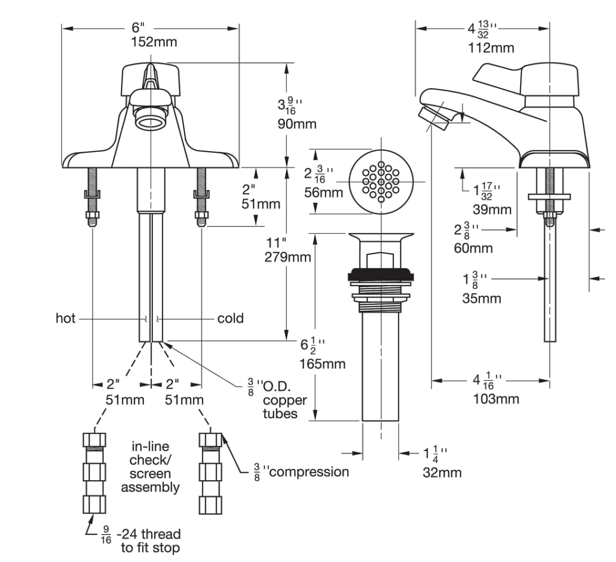

Job/Location
. . . .
Engineer
. . . .
Contractor
. . . .

For ADA compliance (Americans with Disabilities Act) consult ADAAG or your state regulations for proper product choice and mounting locations.

Symmons Industries, Inc. ▪ 31 Brooks Drive ▪ Braintree, MA 02184
(800) 796-6667 ▪ Fax (800) 961-9621
Website: www.symmons.com ▪ Email: gethelp@symmons.com

SYMMONS® the smart choice™

© 2010-2014 Symmons Industries, Inc. Printed in U.S.A. ▪ 062614

SMITH® CUSTOMER DRIVEN
JAY R. SMITH MFG. CO.®
DIVISION OF SMITH INDUSTRIES, INC.
POST OFFICE BOX 3237
MONTGOMERY, ALABAMA 36109-0237 (USA)
TEL: 334-277-8520 FAX: 334-272-7396 www.jrsmith.com
ASPE · MEMBER OF: PDI · ASSE

LOCATION

LABOR SAVER® LAVATORY SUPPORTS WITH CONCEALED ARMS
FLOOR MOUNTED TYPE WITH EXTENSION SET BEHIND ______" WALL

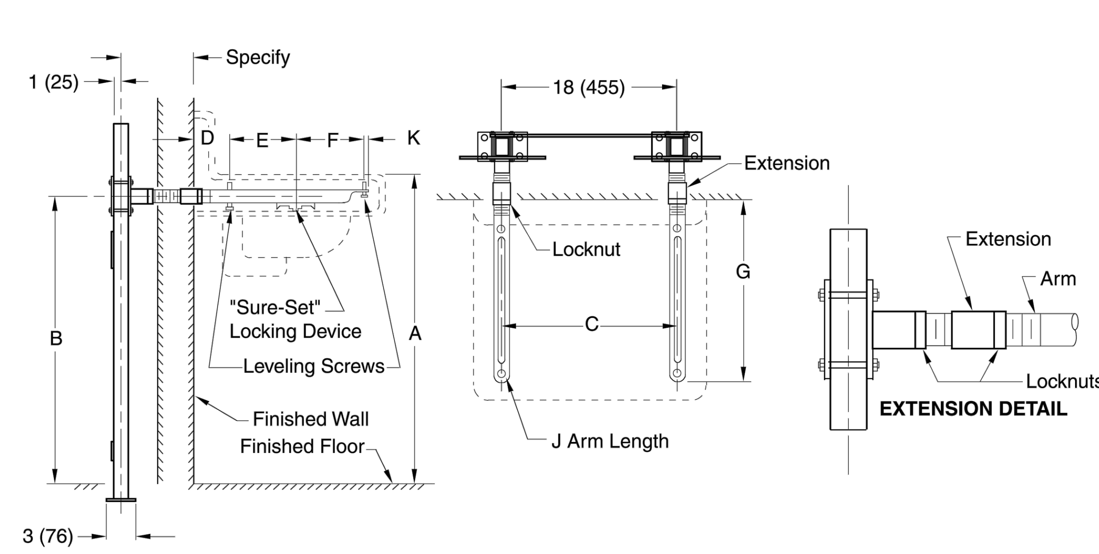

Fig. 0710 . . . FOR HIGH BACK LAVATORIES (shown)

NOTE: The rough-in dimensions listed on this drawing are based on current information available to Jay R. Smith by the fixture manufacturers. We recommend that you verify these dimensions with the fixture manufacturer. We will not accept responsibility for rough-in dimension changes by the fixture manufacturer.

NOTE: *This dimension includes a wall thickness of 1/2". For greater wall thickness, specify centerline of upright to finished wall dimension.

NOTE: Dimensions shown in parentheses are in millimeters.

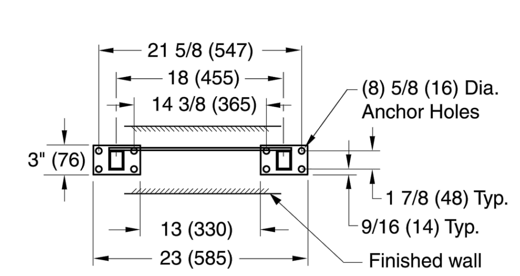

BASE DETAIL

ROUGH-IN TABLE

FIXTURE MFG.	NAME	NUMBER	SIZE

A	B	C	D	E	F	G	J	K

REV.	DATE	DESCRIPTION	BY	CKD. BY
D	07/23/08	Revised Plate Configuration	JJ	CL
C	12/06/02	Revised per George Flegel	JJ	AM
B	12/02/02	Added Extension Option	JJ	AM
A	12/19/01	Changed Hole Size in Base	JJ	AM

WEIGHT POUNDS | VOLUME CUBIC FEET | FIGURE NUMBER **0710 (-M24)**

D | DRAWING NUMBER S0710 (-M24) | SIZE A | SCALE: NONE | DATE: 07/23/01 | APPROVED BY: AM | CHECKED BY: CR | DRAWN BY: JJ | FIGURE NUMBER 0710 (-M24)

WE CAN ASSUME NO RESPONSIBILITY FOR USE OF SUPERSEDED OR VOID DATA
DIMENSIONS ARE SUBJECT TO MANUFACTURERS TOLERANCE AND CHANGE WITHOUT NOTICE

ACORN

Meridian 3711 Series
Meridian Stainless Steel Straight Front Uni-Basin - ADA Compliant

3711-1-H
Fixture May Show Some Available Options

Please visit ***www.acorneng.com*** for most current specifications.

Meridian Stainless Steel Straight Front Uni-Basin - ADA Compliant

Meridian Stainless Steel Straight Front Uni-Basins are engineered to combine the look and feel of commercial-grade designer basins and countertops with the durability and economy of group fixtures. Each standard height Washbasin complies with ANSI, UFAS and ADA requirements. Compliance is subject to the interpretation and requirements of the local code authority.

Housing is heavy gage, type 304 stainless steel and is polished to a satin finish. Countertop, backsplash and housing feature fully welded, seamless corners.

Integral Basin is of a round design, (15-3/4" diameter x 5" deep) and includes a satin finish. Basin includes grid strainer, waste piping and 1-1/2" P-trap.

-H Hand Operation includes backsplash mounted pushbutton and stainless steel tubular spout with 0.5 GPM flow control. Pushbutton Air-Control actuation provides adjustable metering up to 60 seconds.

-SO Sensor Operation includes infrared sensor actuated, deck mounted stainless steel tubular spout with 0.5 GPM flow control. Sensor / Solenoid are powered by a plug-in transformer provided and actuates an individual solenoid valve.

Mixing Valve delivers tempered water flow by compensating for pressure and temperature fluctuations and is ASSE 1070 compliant. Valve is to be field set to 105° Fahrenheit and includes strainers and integral checks. Operating range is 30 to 100 PSI.

Off-Floor Models include a trap enclosure to conceal hot and cold mixing valve assembly and P-trap. Enclosure is fabricated of heavy gage, type 304 stainless steel with a satin finish. Wall requires adequate backing to support Washbasin.

On-Floor Models include a pedestal base with stainless steel frame, stainless steel scuff panel and black vinylclad, galvanized steel enclosure. Enclosure conceals valve, piping, supply and waste connections. Pedestal base is wall mounted and supported on-floor. An enclosed bottom (- EB) is provided standard for on-floor models.

-PDM Pump Type Soap Dispenser is optionally available for liquid and lotion type soaps. Dispenser is deck mounted with an under-the-counter reservoir and top refill feature for ease of maintenance.

GUIDE SPECIFICATION
Meridian Stainless Steel Straight Front One-Person Washbasin by Acorn (Specify model number and options). Unit with 34" standard height rim to conform with ANSI, UFAS and ADA Accessibility Standards. Washbasin to include an integral round basin (15-3/4" diameter x 5" deep). Basin, countertop, backsplash, apron and trap enclosure to be constructed of heavy gage, type 304 stainless steel with satin finish. Operation: (Specify) Provide pushbutton actuated Air-Control metering valve with backsplash mounted stainless steel tubular spout. Washbasin to be furnished complete with the following: ASSE 1070 compliant temperature / pressure balancing mixing valve with strainers and integral checks, and 1-1/2" P-trap waste outlet.

Acorn Engineering Company • 15125 Proctor Avenue • P.O. Box 3527 • City of Industry, CA 91744-0527 U.S.A.
Tel: (800) 488-8999 • (626) 336-4561 • (626) 961-2200 • www.acorneng.com • E-mail: info@acorneng.com

Meridian 3711: Meridian Stainless Steel Straight Front Uni-Basin - ADA Compliant

ACORN

BASE MODEL NUMBER (Must Specify)
☑ 3711 Meridian Stainless Steel Straight Front Uni-Basin

FIXTURE MOUNTING & WASTE (Must Specify)
❑ -1 Off-Floor, Wall Outlet
❑ -2 On-Floor, Wall Outlet

OPERATION (Must Specify)
❑ -9 Punching for Valves & Spout by Others (Specify -RLD or -TZ)
❑ -CSG 4" Centerset Faucet with Gooseneck Spout & Wrist Blade Handles includes -H34. Specify -RLD or -TZ
❑ -H Hand Operation Backsplash Mounted Spout Standard
❑ -PPZ Programmable Piezo Pushbutton Electronic Metering Backsplash Mounted Spout Standard
❑ -SO Sensor Operation, Deck Mounted Spouts, Must Specify Below
❑ -SO-BAT Sensor Operation, Battery Powered Deck Mounted Spouts, Must Specify Below (Batteries Not Included)

PRODUCT OPTIONS (Must Specify)
❑ -DMJ Deck Mounted 'J' Spout
❑ -DML Deck Mounted 'L' Spout
❑ -DMP Deck Mounted Pushbutton
❑ -EB Enclosed Bottom (Not Available w/ - SSN)
❑ -ECL Extended Countertop - Left Hand, Specify ____ (120" maximum overall width)
❑ -ECR Extended Countertop - Right Hand, Specify ____ (120" maximum overall width)

PRODUCT OPTIONS (cont.)
❑ -EG Enviro-Glaze (Cabinet/Counter) Color: _______
❑ -JH 31" Junior Rim Height **(Not ADA Compliant)**
❑ -LE Less Trap Enclosure
❑ -ME Marine Edge
❑ -OF Basin Overflow
❑ -PDM Metering Liquid Soap Dispenser
❑ -RLD "D" Shaped Basin (Specify Punching for -9, Valve by Others)
❑ -H1 Single Hole Centered
❑ -H24 Two Holes, 4" Centerset
❑ -H34 Three Holes, 4" Centerset
❑ -H38 Three Holes, 8" Centerset
❑ -SLE Sloped Front Enclosure (-1 Off Floor Models Only; Must also specify -SPX or -VP below)
❑ -SPX 16 Gage Stainless Steel Enclosure
❑ -SSN 2-1/2" Stainless Steel Narrow Apron (-1 Off-Floor Models Only)
❑ -ST Single Temperature Valve
❑ -TZ Trapezoidal Basin (Specify Punching for -9, Valve by Others)
❑ -H1 Single Hole Centered
❑ -H24 Two Holes, 4" Centerset
❑ -H34 Three Holes, 4" Centerset
❑ -H38 Three Holes, 8" Centerset
❑ -VP Vinylclad Enclosure - Specify: ❑ Black (Std.) ❑ Gray ❑ White

Please visit ***www.acorneng.com*** for most current specifications.

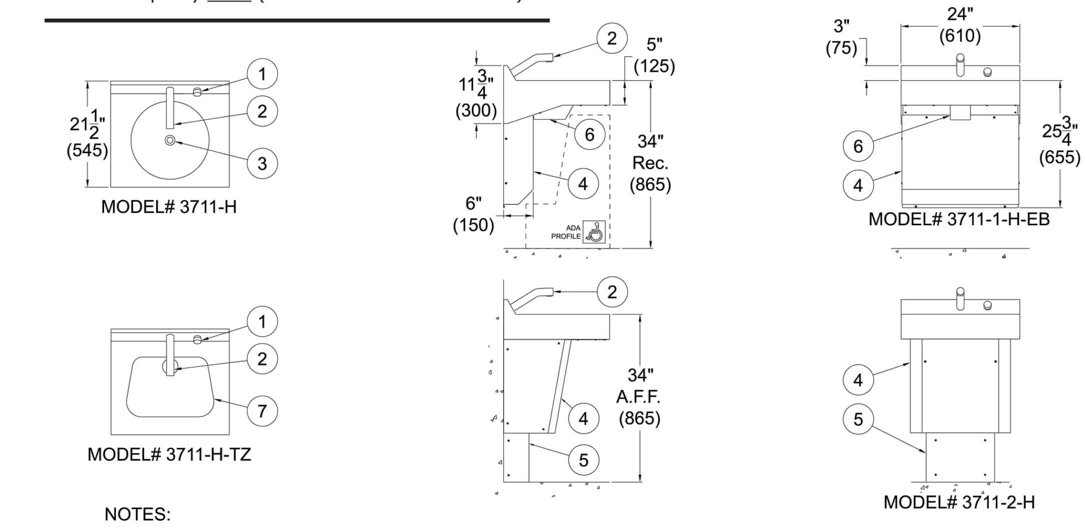

NOTES:
1. Backsplash Pushbutton.
2. Backsplash Mounted Spout.
3. Grid Strainer with Close Elbow.
4. Trap Enclosure.
5. On-Floor, Toe-Kick, Pedestal.
6. Optional -EB Enclosed Bottom.
7. Optional -TZ Trapazoidal Basin.

Important: Installation instructions and current rough-in are furnished with each fixture. Do not rough in without certified dimensions.
Dimensions are subject to manufacturer's tolerance of plus or minus 1/4" and change without notice. Acorn assumes no responsibility for use of void or superseded data. © Copyright 2009 Acorn Engineering Company

Selection Summary	Approved for Manufacturing
Model No. & Option________________	Company____________Title__________
Quantity________________	Signature____________ Date__________

Acorn Engineering Company • 15125 Proctor Avenue • P.O. Box 3527 • City of Industry, CA 91744-0527 U.S.A.
Tel: (800) 488-8999 • (626) 336-4561 • (626) 961-2200 • www.acorneng.com • E-mail: info@acorneng.com

STATE OF TEXAS
NORMAN S. HOFFMAN
95483
The seal appearing on this document was authorized by NORMAN HOFFMAN P.E. 95483 8/22/2017

GALVESTON COUNTY BEACH PAVILION CRYSTAL BEACH, TX 77650

BE-Arc LLC Project No : C-13-007.01

ibis Engineering
REG # F-11156
P.O. Box 55171
Galveston, Texas 77555
PH 409.621.6740
THIS PRINT IS THE PROPERTY OF IBIS ENGINEERING IT MUST NOT BE TRACED OR REPRODUCED IN ANY MANNER NOR SHALL IT BE SUBMITTED WITHOUT PRIOR WRITTEN CONSENT FROM IBIS ENGINEERING.

BRAX EASTERWOOD
DESIGN
2728 AVENUE Q SUITE 2
GALVESTON TEXAS 77550
PHONE 409-354-8976
EASTERWOOD@BEAIA.COM

DESIGN REVIEW

DATE	REVISION

DESIGN DEVELOPMENT

DATE ISSUED:
9/28/2017

COPYRIGHT 2017

P2.0

ES-LFUSG-B-M2

For Residential and Commercial Applications

Job Name ______________________ Contractor ______________________

Job Location ______________________ Approval ______________________

Engineer ______________________ Contractor's P.O. No. ______________________

Approval ______________________ Representative ______________________

LEAD FREE*

Series LFUSG-B

Under Sink Guardian®

The LFUSG-B-M2 Under Sink Guardian® ⅜" (10mm) compression and Quick-Connect fitting thermostatic mixing valves maintain and limit hot water to desired selectable temperature between 80°F and 120°F (27°C and 49°C) with flow rates as low as 0.25 gpm (1.0 lpm) and as high as 2.25 gpm (8.5 lpm). The mixing valve is listed to ASSE Standard 1070 for single fixture applications and IAPMO cUPC. The LFUSG-B-M2 features Lead Free* construction to comply with Lead Free* installation requirements. The superior flow characteristics of these valves provide temperature control with low pressure drop. As an added feature, the LFUSG-B -M2 incorporates dual check valves to protect against cross-flow and integral screens to filter out debris.

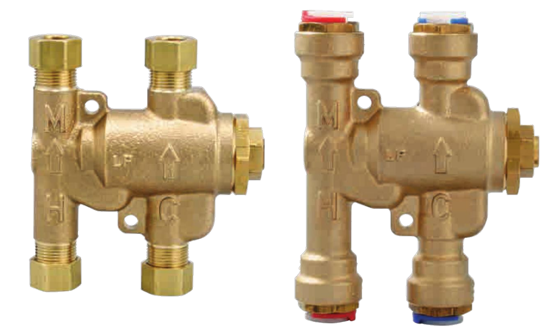

LFUSG-B-M2 LFUSG-B-QC-M2

ASSE 1070 & IAPMO cUPC Listed

Features

- Lead Free* Brass body construction
- Installs easily between the stop valves and faucet
- Includes tamper resistant locking nut to prevent accidental mis-adjustment
- Built-in check valves prevent migration of hot water to cold and cold water to hot water piping
- Provided with cap for three port application
- Integral strainer with 40 mesh stainless steel screens to filter out debris

Applications

The unit is intended for under sink installation to control the hot water temperature and minimize the occurrence of accidental scalding. The water temperature must be adjusted by the installer using a thermometer to measure the hot water temperature at the faucet outlet. Maximum temperature of 105°F (41°C) is recommended.

Specifications

A Thermostatic Mixing Valve shall be installed on the hot water supply to the fixture. The valve shall be ASSE Standard 1070 and IAPMO cUPC listed and control the temperature of the hot water. It shall have a Lead Free* brass 4-port, "H" pattern body. Lead Free* under counter thermostatic valves shall comply with state codes and standards, where applicable, requiring reduced lead content. The valve shall include integral check valves, integral screens and an adjustment nut with locking feature. The valve shall be provided with ⅜" (10mm) male compression or Quick-connect fittings. The valve shall be Watts Series LFUSG-B.

For satin chrome finish specify – SC.

Materials

Body: Lead Free* Brass
Rubber Disc: Buna-N
O-rings: Buna-N
Spring: Stainless steel
Piston: Noryl®
Thermostat: Copper

Approval

ASSE 1070

Pressure – Temperature

Minimum supply pressure: 30psi (207 kPa)
Hot inlet temperature: 120°F-180°F (49°C-82°C)
Cold inlet temperature: 39°F-80°F (3.8°C-27°C)
Minimum inlet temperature differential: 5°F (2.8°C)
Temperature range: 80°F-120°F (27°C-49°C)
Maximum pressure: 150psi (10.3 bar)
Minimum Flow: 0.25 gpm (1.0 l/m)

***The wetted surface of this product contacted by consumable water contains less than one quarter of one percent (0.25%) of lead by weight.**

Noryl® is a registered trademark of SABIC Innovative Plastics®.

Watts product specifications in U.S. customary units and metric are approximate and are provided for reference only. For precise measurements, please contact Watts Technical Service. Watts reserves the right to change or modify product design, construction, specifications, or materials without prior notice and without incurring any obligation to make such changes and modifications on Watts products previously or subsequently sold.

Basic Construction

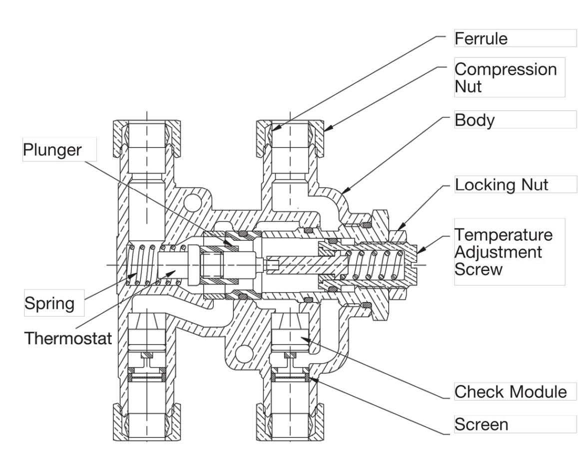

Flow Capacity

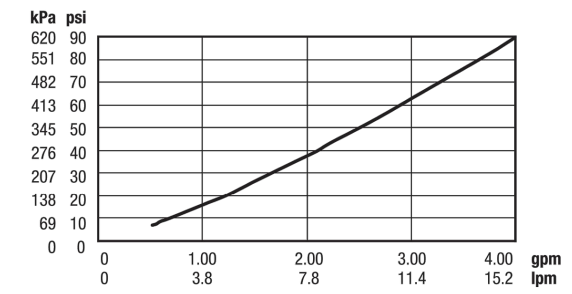

Dimensions – Weights

MODEL	SIZE	A in.	A mm	B in.	B mm	C in.	C mm	D in.	D mm	WEIGHT lbs.	WEIGHT kgs.
LFUSG-B-M2	⅜" Comp.	3³⁄₁₆	81	3⅜	85	1¹³⁄₁₆	47	1½	38	.82	.37
LFUSG-B-SC-M2	⅜" Comp.	3³⁄₁₆	81	3⅜	85	1¹³⁄₁₆	47	1½	38	.82	.37
LFUSG-B-QC-M2	⅜" Quick Connect	3¼	83	4	102	2¼	57	1½	38	1.05	.48
LFUSG-B-QC-SC-M2	⅜" Quick Connect	3¼	83	4	102	2¼	57	1½	38	1.05	.48

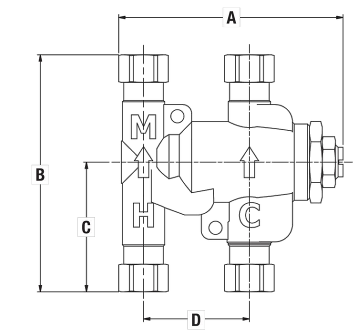

Typical Installations

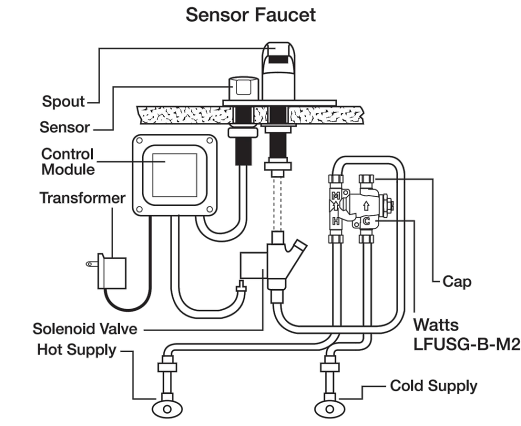

NOTICE

This information is not intended to replace the full product installation and safety information available or the experience of a trained product installer. You are required to thoroughly read all installation instructions and product safety information before beginning the installation of this product.

A Watts Water Technologies Company

USA: Tel: (978) 689-6066 • Fax: (978) 975-8350 • Watts.com
Canada: Tel: (905) 332-4090 • Fax: (905) 332-7068 • Watts.ca
Latin America: Tel: (52) 81-1001-8600 • Fax: (52) 81-8000-7091 • Watts.com

ES-LFUSG-B-M2 1433

© 2014 Watts

Dura-Ware® 2115 Series

Siphon Jet Toilet - On Floor

2115-W-2

Fixture May Show Some Available Options

Please visit *www.acorneng.com* for most current specifications.

Siphon Jet Toilet - On Floor

Fixture is arranged to be installed on finished wall from the front side. It is fabricated from 16 gage, type 304 stainless steel and is seamless welded construction. Exterior has a satin finish with an integral contoured seat. The inside of the toilet bowl also has a satin finish. Wall flange is reinforced for maximum strength.

Toilet is Siphon Jet type with elongated bowl manufactured to comply with ASME A112.19.3-2008 and CSA B45.4-2008 standards. Toilet requires a minimum of 25 PSI flow pressure and uses a minimum water consumption of 1.28 GPF. Trap has a minimum 3-1/2" seal, will pass a 2-1/8" ball and is fully enclosed. Toilet has a 1-1/2" NPT flush valve connection and a gasketed waste outlet.

Flush Valve supply is additionally available for exposed or concealed flush valve styles in 1.28 GPF, 1.6 GPF or 3.5 GPF with 1-1/2" NPT connection.

Concealed floor anchor is furnished with two T-head anchor bolts, washers, and nuts.

GUIDE SPECIFICATION

Provide and install Acorn Dura-Ware Siphon Jet Toilet (specify model number and options). Fixture shall be fabricated from 16 gage, type 304 stainless steel. Construction shall be seamless welded and exposed surfaces shall have a satin finish with an integral contoured toilet seat. Toilet shall be concealed siphon jet type with an elongated bowl and a self-draining flushing rim. Toilet shall be ASME A112.19.3-2008 and CSA B45.4-2008 compliant. Toilet requires a minimum of 25 PSI flow pressure and uses a minimum water consumption of 1.28 GPF. Toilet trap shall have a minimum 3-1/2" seal that shall pass a 2-1/8" diameter ball and be fully enclosed. Toilet waste outlet shall be a gasketed waste.

**Acorn Engineering Company • 15125 Proctor Avenue • P.O. Box 3527 • City of Industry, CA 91744-0527 U.S.A.
Tel: (800) 488-8999 • (626) 336-4561 • Fax: (626) 961-2200 • www.acorneng.com • E-mail: info@acorneng.com**

MGI SpecBuilder™ — Configure products and create specs with ease. — Get Started ➡ www.mgispecbuilder.com

Dura-Ware®: 2115 Siphon Jet Toilet - On Floor

WALL THICKNESS AND TYPE (Must Specify)
Thickness: __________ Type: ❑ Concrete ❑ Block ❑ Steel

MODEL NUMBER AND OPTIONS SELECTION:

BASE MODEL NUMBER
☑ 2115 Siphon Jet Toilet

SUPPLY (Must Specify)
❑ -T Top (Exposed)
❑ -W Wall (Concealed)

FIXTURE MOUNTING AND WASTE (Must Specify)
☑ -2 On-Floor, Wall Outlet

FLUSH VALVE GPFs (Must Specify)
❑ -1.28 GPF (HET)
❑ -1.6 GPF (Not Available in California)
❑ -3.5 GPF (Not Available in California)

FLUSH VALVE OPTIONS (Must Specify)
REFER TO ACORN DURA-WARE ACCESSORIES FOR FLUSH VALVE COVER #2802, BOX #2803-1 AND PANEL #2898
❑ -FV Flush Valve, Mechanical (N/A for ADA)
❑ -FVBO Flush Valve by Other
❑ -FVH Flush Valve, Hydraulic (N/A for Top Supply)
❑ -FVL Flush Valve, ADA Lever Handle
❑ -MVCFV Time-Trol Flush Valve (N/A for Top Supply)

TOILET SEAT OPTIONS
❑ -HPS High Polish Integral Seat
❑ -HS-OFLC Hinged Seat, Open Front Less Cover
❑ -HS-OFWC Hinged Seat w/ Cover
❑ -PFS Punched for Seat by Others

TOILET OPTIONS
❑ -FT Flood-Trol (N/A with Top Supply)
❑ -FTA Flood-Trol Auto-Reset (N/A with Top Supply)
❑ -FTE Flood-Trol Electronic
❑ -FVT Flush Thru Wall Connector
❑ -PE Plain End Waste Extended 3" Beyond Rear of Fixture
❑ -TSC Toilet Shipping Cover

PRODUCT OPTIONS
❑ -ADA 18" Integral Seat Height
❑ -BCN Blind Cap Nuts (4)
❑ -BL Bedpan Lugs
❑ -CN Cap Nuts (4)
❑ -EG Enviro-Glaze Color Specify:__________ Toilet Interior & Exterior
❑ -EGE Enviro-Glaze Color Specify:__________ Toilet Exterior Only
❑ -FG 14 Gage Housing
❑ -TF Transformer, 120VAC to 24VAC (-MVCFV option)
❑ -VAC AcornVac System

Please visit *www.acorneng.com* for most current specifications.

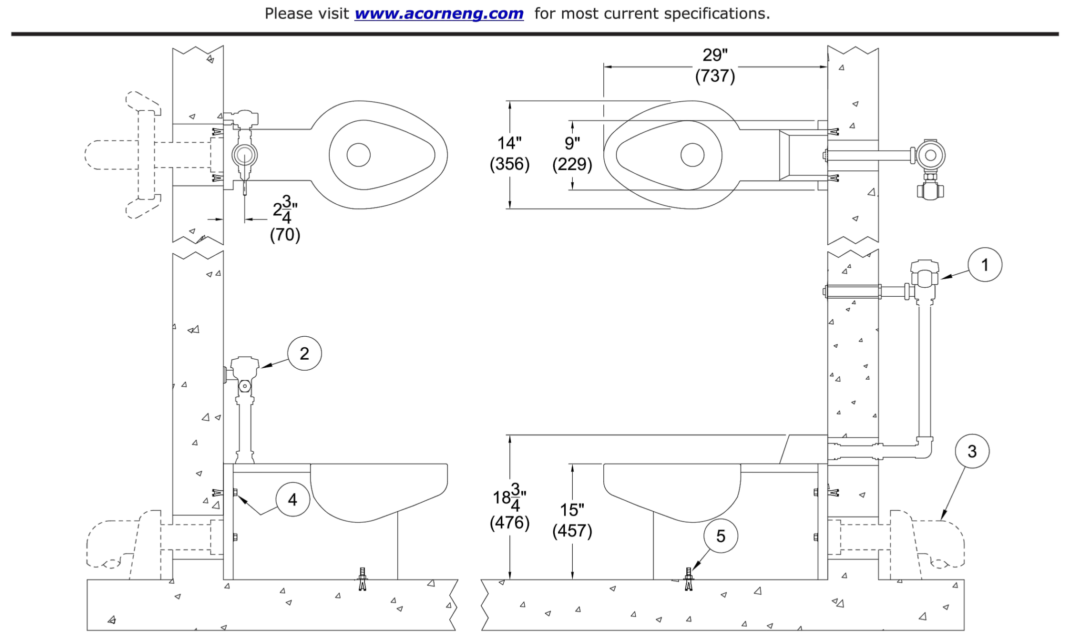

NOTES:
1. Optional -FV Flush Valve - Wall Supply
2. Optional -FV Flush Valve - Top Supply
3. Waste Fitting (By Others)
4. Wall Fasteners
5. Floor Fasteners

Important: Installation instructions and current rough-in are furnished with each fixture. Do not rough in without certified dimensions.
Dimensions are subject to manufacturer's tolerance of plus or minus 1/4" and change without notice. Acorn assumes no responsibility for use of void or superseded data. © Copyright 2009 Acorn Engineering Company

Selection Summary	Approved for Manufacturing
Model No. & Option__________	Company__________ Title__________
Quantity__________	Signature__________ Date__________

**Acorn Engineering Company • 15125 Proctor Avenue • P.O. Box 3527 • City of Industry, CA 91744-0527 U.S.A.
Tel: (800) 488-8999 • (626) 336-4561 • Fax: (626) 961-2200 • www.acorneng.com • E-mail: info@acorneng.com**

COUNTY APPROVAL:
SIGNATURE ______________________ DATE__________

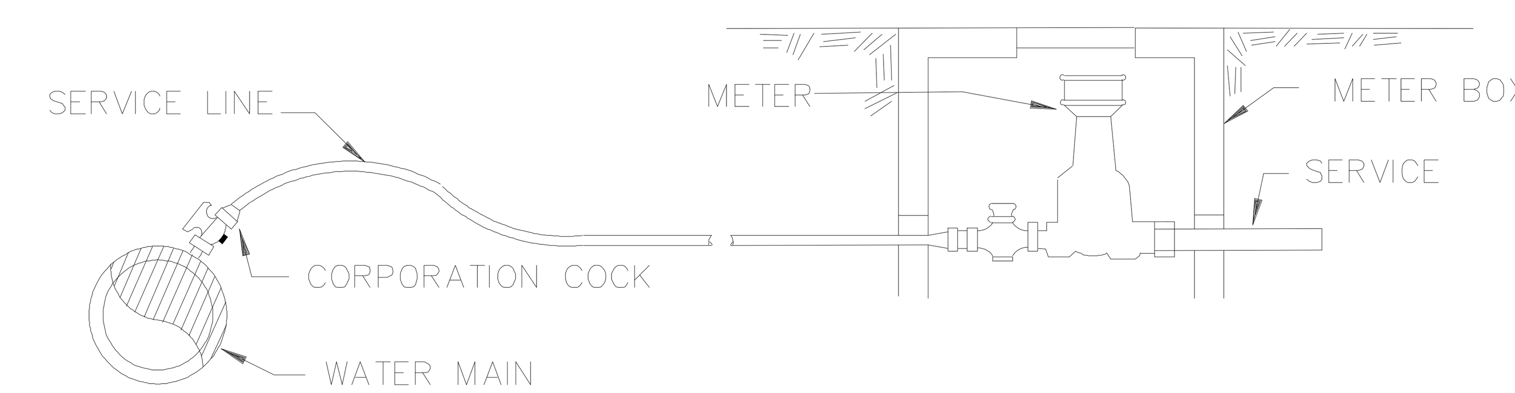

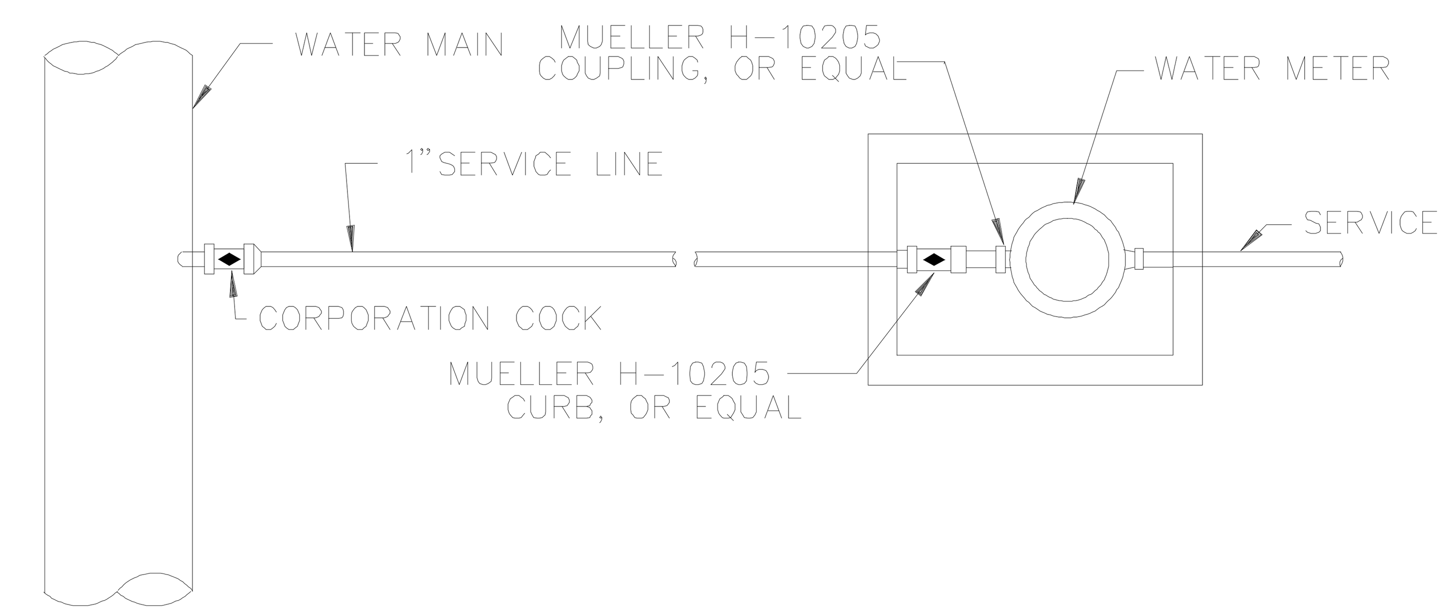

**GALVESTON COUNTY
BEACH PAVILION
CRYSTAL BEACH, TX 77650**

BE-Arc LLC Project No : C-13-007.01

Ibis Engineering
REG # F-11156
P.O. Box 55171
Galveston, Texas 77555
PH 409.621.6740

THIS PRINT IS THE PROPERTY OF IBIS ENGINEERING IT MUST NOT BE TRACED OR REPRODUCED IN ANY MANNER NOR SHALL IT BE SUBMITTED WITHOUT PRIOR WRITTEN CONSENT FROM IBIS ENGINEERING.

B R A X E A S T E R W O O D
D E S I G N
2728 AVENUE Q SUITE 2
GALVESTON TEXAS 77550
PHONE 409-354-8976
EASTERWOOD@BEAIA.COM

DESIGN REVIEW

DATE	REVISION

DESIGN DEVELOPMENT

DATE ISSUED:
9/28/2017

COPYRIGHT 2017

STATE OF TEXAS
NORMAN S. HOFFMAN
95483

The seal appearing on this document was authorized by NORMAN HOFFMAN P.E. 95483 8/22/2017

P2.1

COUNTY APPROVAL:
SIGNATURE _____ DATE_____

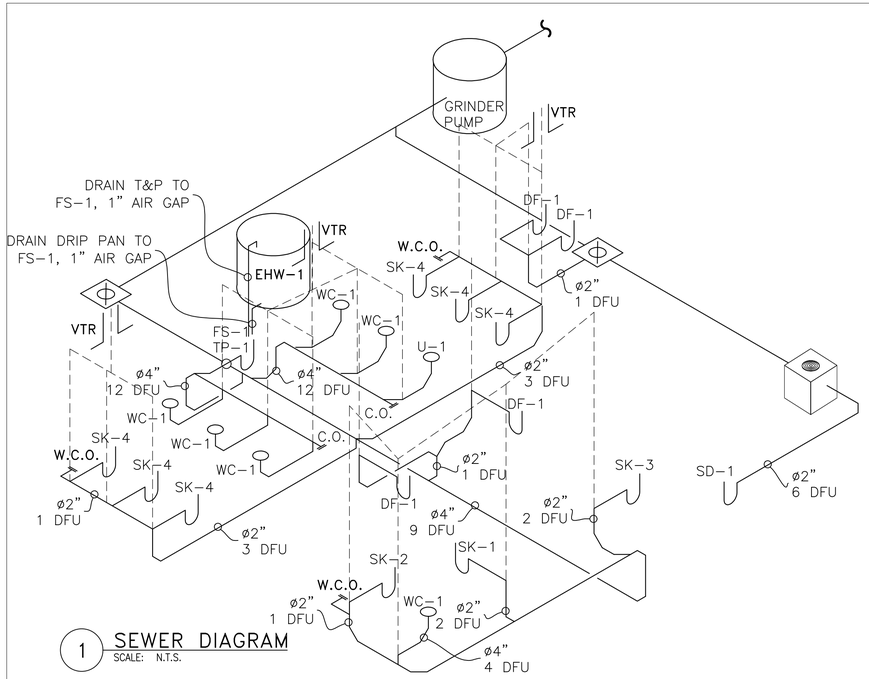

1 SEWER DIAGRAM
SCALE: N.T.S.

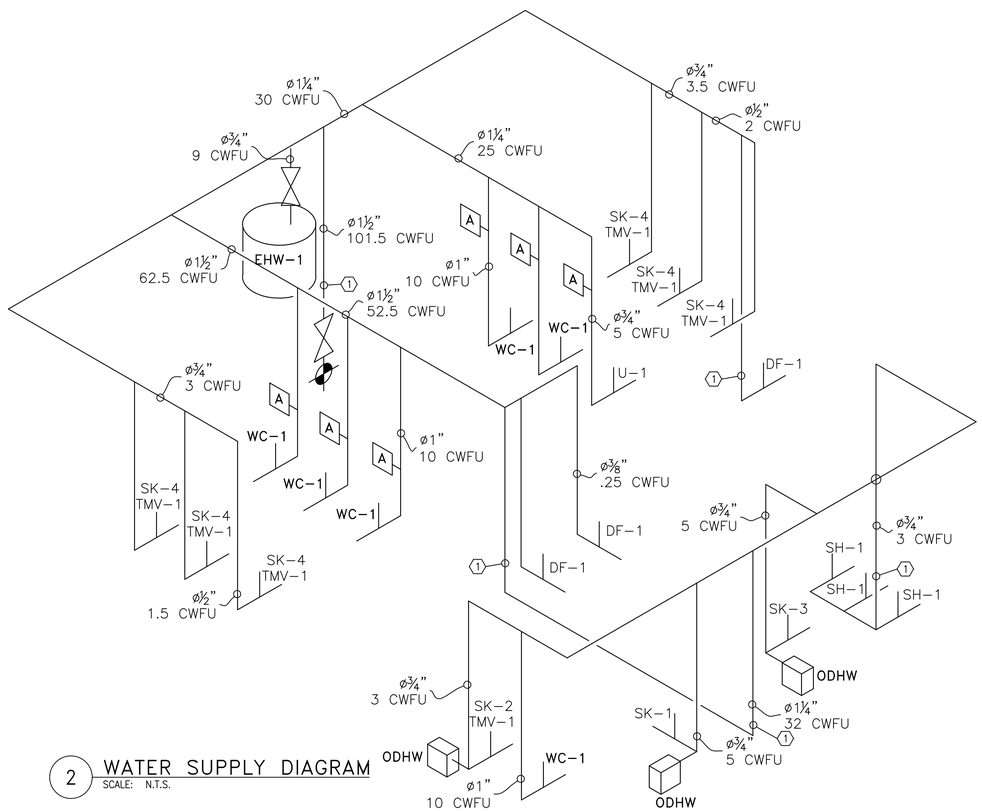

2 WATER SUPPLY DIAGRAM
SCALE: N.T.S.

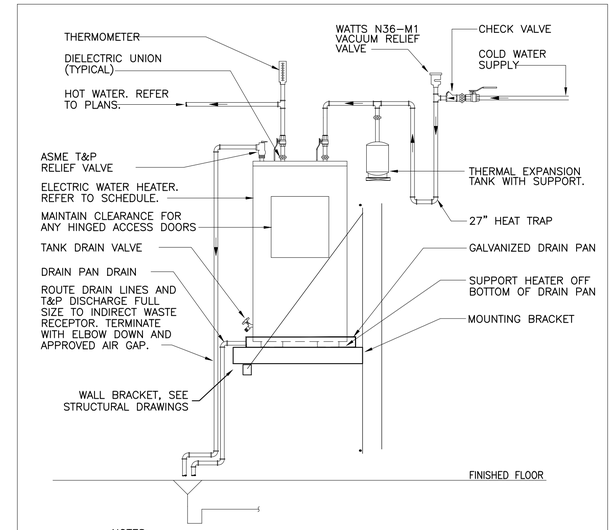

NOTES:
1. PROVIDE 1" PIPE INSULATION HAVING A CONDUCTIVITY NOT EXCEEDING 0.28 BTU PER INCH/HR x S.F. x °F ON ALL DOMESTIC HOT WATER AND RETURN PIPING.
2. PROVIDE AQUASTAT CONTROL OF HOT WATER CIRCULATING PUMP. RE: PLANS AND HOT WATER CIRCULATING PUMP DETAIL.

1 ELECTRIC WATER HEATER PIPING
SCALE: NONE

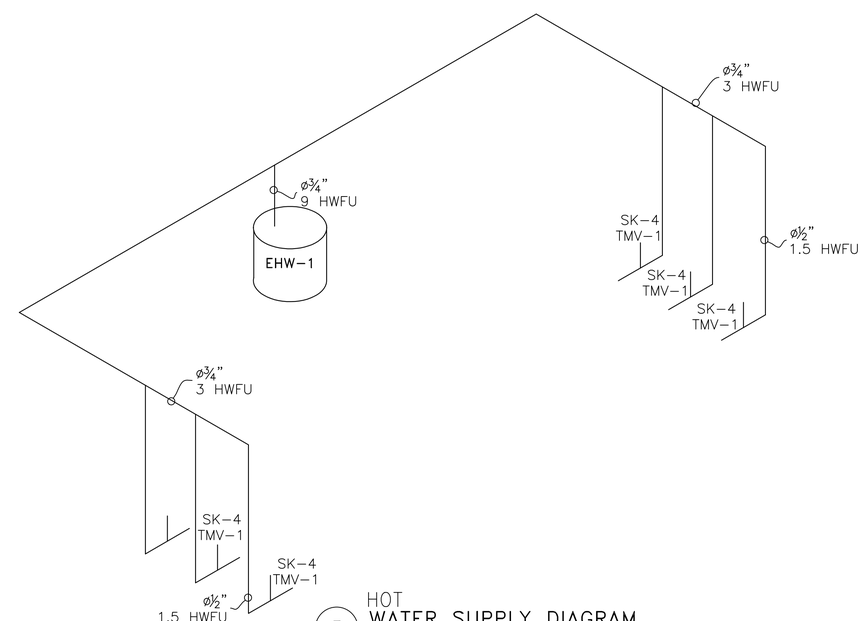

3 HOT WATER SUPPLY DIAGRAM
SCALE: N.T.S.

GALVESTON COUNTY
BEACH PAVILION
CRYSTAL BEACH, TX 77650

BE-Arc LLC Project No : C-13-007.01

bis Engineering
REG # F-11156
P.O. Box 1375
Galveston, Texas 77555
PH 409.621.5740
THIS PRINT IS THE PROPERTY OF BIS ENGINEERING IT MAY NOT BE TRACED, OR REPRODUCED, IN WHOLE OR IN PART, OR BE SUBMITTED WITHOUT PRIOR WRITTEN CONSENT FROM BIS ENGINEERING.

BRAX EASTERWOOD
DESIGN
2728 AVENUE Q SUITE 2
GALVESTON TEXAS 77550
PHONE 409-354-8976
EASTERWOOD@BEAIA.COM

DESIGN REVIEW

DATE	REVISION

DESIGN DEVELOPMENT

DATE ISSUED:
9/28/2017

COPYRIGHT 2017

P2.2

COUNTY APPROVAL:
SIGNATURE ______________________________ DATE______________

Penal-Ware® 1709HEU Series
ADA Compliant High Efficiency Urinal

1709HEU-W-1
Fixture May Show Some Available Options

Please visit *www.acorneng.com* for most current specifications.

ADA Compliant High Efficiency Urinal

Penal-Ware High Efficiency Urinals are engineered to combine attractive looks with versatility, and intended for mounting onto a finished wall from an accessible pipe chase. Unit features a contoured interior to facilitate cleaning. Urinals mounted at 17" rim height comply with ANSI, ADA, UFAS accessibility requirements. Compliance is subject to the interpretation and requirements of the local code authority.

Fixture bowl is fabricated of 16 gage type 304 stainless steel and the housing fabricated of 18 gage type 304 stainless steel with exterior surfaces polished to a satin finish.

Urinal is a high efficiency type requiring a 1/8 GPF (0.47 Liters per Flush) to 1/2 GPF (1.8 Liters per Flush) flush valve and supplied with 3/4" NPT flushing inlet connection and 1-1/2" O.D. plain end P-Trap.

GUIDE SPECIFICATION

Provide Acorn Penal-Ware Stainless Steel Urinal (specify model number and options). Urinal mounted at 17" rim height to comply with ANSI, ADA and UFAS accessibility requirements. Interior to have a contoured surface to facilitate cleaning. Fixture shall be fabricated of 18 gage with 16 gage bowl type 304 stainless steel with exposed surfaces polished to a satin finish.

Acorn Engineering Co. • 15125 Proctor Ave. • P.O. Box 3527 • City of Industry, CA 91744-0527 U.S.A.
Tel: (800)488-8999 • (626) 336-4561 • (626) 961-2200 • www.acorneng.com • E-mail: info@acorneng.com

MGI SpecBuilder™ — Configure products and create specs with ease. — Get Started www.mgispecbuilder.com

Penal-Ware® 1709HEU High Efficiency Urinal - ADA Compliant

MODEL NUMBER AND OPTIONS SELECTION

WALL THICKNESS AND TYPE
Thickness: _________ Type: ❑ Concrete ❑ Block ❑ Steel

BASE MODEL NUMBER
☑ -1709HEU High Efficiency Urinal

SUPPLY SELECTION (Must Specify)
❑ -T Top *(Exposed)*
❑ -W Wall *(Concealed)*

FIXTURE MOUNTING & WASTE (Must Specify)
☑ -1 Off-Floor, Wall Outlet

FLUSH VALVE GPF's (Must Specify)
❑ -0.125 GPF
❑ -0.5 GPF (Not Available in California)

Please *visit* ***www.acorneng.com*** for most current specifications.

FLUSH VALVE OPTIONS (Must Specify)
REFER TO ACORN DURA-WARE ACCESSORIES FOR FLUSH VALVE COVER #2802, BOX #2803-1 AND PANEL #2898
❑ -EVSFV Master-Trol® Electronic Flush Valve (N/A for Top Supply)
❑ -EVSPFV Master-Trol® Electronic Flush Valve w/ Piezo Button (N/A for Top Supply)
❑ -FV Flush Valve, Mechanical (N/A for ADA)
❑ -FVBO Flush Valve by Others
❑ -FVH Flush Valve, Hydraulic (N/A for Top Supply)
❑ -FVL Flush Valve, Lever Handle (Wall Supply)
❑ -MTPFV Master-Trol® PLUS Electronic Flush Valve
❑ -MTPPFV Master-Trol® PLUS Electronic Flush Valve w/ Piezo Button
❑ -MVCFV Time-Trol® Electronic Flush Valve (N/A for Top Supply)

PRODUCT OPTIONS (Must Specify)
❑ -EG Enviro-Glaze (Interior and Exterior): Color: __________
❑ -MT Metal Template
❑ -SW Wall Sleeve
❑ -TF Transformer, 120VAC to 24VAC (-MVCFV option)

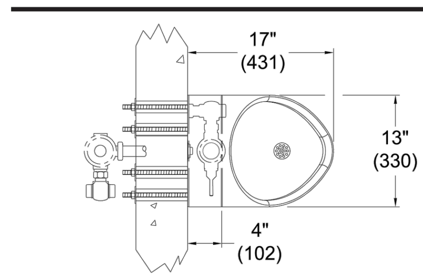

1. Flush Nozzle
2. 1-1/2" O.D. Stainless Steel P-Trap Assembly
3. Optional -T Top Supply -FV Flush Valve
4. Optional -W Wall Supply -FV Flush Valve
5. 3/4" NPT Flushing Inlet Connection

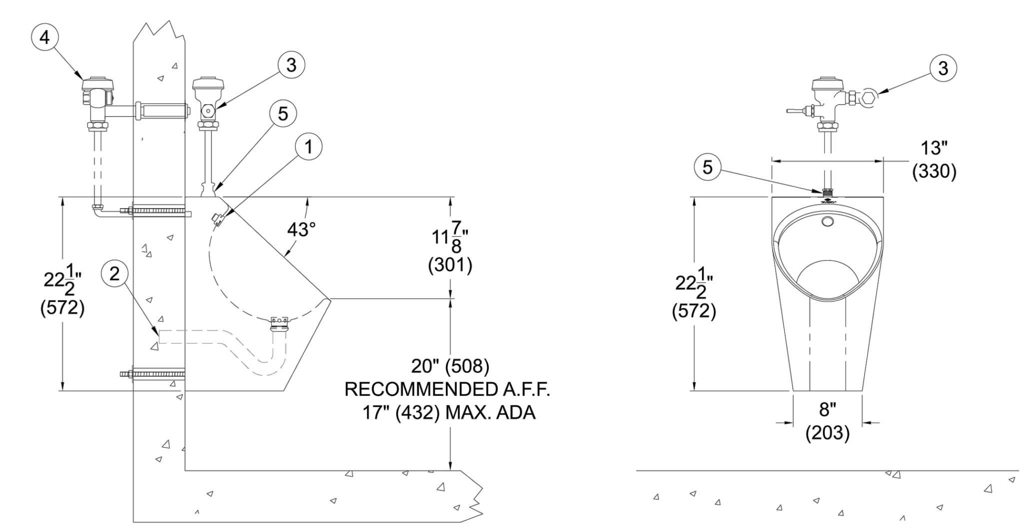

MODEL #1709HEU-T/W-1

Important: Installation instructions and current rough-in are furnished with each fixture. Do not rough in without certified dimensions.
Dimensions are subject to manufacturer's tolerance of plus or minus 1/4" and change without notice. Acorn assumes no responsibility for use of void or superseded data. © Copyright 2008 Acorn Engineering Company

Selection Summary	Approved for Manufacturing
Model No. & Option________	Company________Title________
Quantity________	Signature________ Date________

Acorn Engineering Co. • 15125 Proctor Ave. • P.O. Box 3527 • City of Industry, CA 91744-0527 U.S.A.
Tel: (800)488-8999 • (626) 336-4561 • (626) 961-2200 • www.acorneng.com • E-mail: info@acorneng.com

Penal-Ware® 1741FA Series
Penal-Pak - Wall Shower - Front Access

1741FA-03-M-RD
Fixture May Show Some Available Options

Please visit *www.acorneng.com* for most current specifications.

Penal-Pak - Wall Shower - Front Access

Shower is arranged to be installed on finished wall and serviced through a removable front panel. Mounting frame is provided. Fixture is fabricated from 14 gage, type 304 stainless steel with a satin finish.

Showerhead is chrome plated and is vandal-resistant. The nozzle is threaded into the body and then locked into place by a set screw from the rear. The spray pattern can only be changed by use of an allen wrench inserted through the nozzle.

Valve is a pneumatically operated, pushbutton Air-Control valve using atmospheric air. Pushbutton is vandal-resistant and requires less than 5 pounds to activate valve. Valve is metering, non-hold open type. Valve timing is adjustable from 5 to 60 seconds. Valve includes a 2.5 GPM flow control (not available in California, see Product Options for alternate choices) and can be remotely located up to 10 feet from the operating pushbutton. Valve conforms with lead free requirements of NSF61, Section 9.

Regularly Furnished items include a metering Air-Control valve, a showerhead, mounting frame and mounting hardware.

GUIDE SPECIFICATION

Provide and install Acorn Penal-Pak-Wall Shower-Front Access (specify model number and options). Shower panel shall be fabricated from 14 gage, type 304 stainless steel and shall have a satin finish. Trim shall be chrome-plated brass or stainless steel. Shower valve shall be Air-Control, metering, non-hold open type. Fixture shall be furnished with necessary fasteners for proper installation.

Acorn Engineering Company • 15125 Proctor Avenue • P.O. Box 3527 • City of Industry, CA 91744-0527 U.S.A.
Tel: (800) 488-8999 • (626) 336-4561 • Fax: (626) 961-2200 • www.acorneng.com • E-mail: info@acorneng.com

Penal-Ware® 1672 Series
Drinking Fountain - ADA 2010 Compliant

1672-1-BC-3
Fixture May Show Some Available Options

Please visit *www.acorneng.com* for most current specifications.

Drinking Fountain - ADA 2010 Compliant

Fixture is designed to be installed and serviced from an accessible pipe chase. Optional Wall Sleeve or Metal Template is recommended on all installations for required wall openings. Fixture is fabricated from 14 gage, type 304 stainless steel and is seamless welded construction with a satin finish. Cabinet interior is sound-deadened with fire-resistant material. There are no accessible voids or crevices where contraband can be concealed. Unit conforms with ANSI, UFAS and ADA 2010 requirements for accessibility. Compliance is subject to the interpretation and requirements of the local code authority.

Countertop has a deck-mounted bubbler.

Bowl is multi-sided. Standard elbow waste outlet is 1-1/2" O.D. plain end and extends 3" beyond the back of fixture.

Valve is an optionally available Air-Control, pneumatically operated, pushbutton valve using atmospheric air and includes 0.7 GPM flow control. Valve is intended to be housed within cabinet or may be remotely located up to 10 feet away from the operating pushbutton. Valve is direct acting, non-metering type, with bubbler that both conform with lead free requirements of NSF61, Section 9 and CHSC 116875. Pushbutton is vandal resistant and requires less than 5 lbs to operate.

Regularly furnished items include a fast drain, plain end elbow waste, and mounting hardware for walls up to 8" thick.

GUIDE SPECIFICATION

Provide and install an Acorn Penal-Ware, ADA 2010 compliant Drinking Fountain (specify model number and options). Fixture shall be fabricated from 14 gage, type 304 stainless steel. Construction shall be seamless welded and exposed surfaces shall have a satin finish. Cabinet interior is sound-deadened with fire-resistant material. Fixture shall be furnished with necessary fasteners for proper installation. Units to conform with ANSI, UFAS and ADA requirements for accessibility, Valve and bubbler conform with lead-free requirements of NSF61, Section 9 and CHSC 116875.

Acorn Engineering Company • 15125 Proctor Avenue • P.O. Box 3527 • City of Industry, CA 91744-0527 U.S.A.
Tel: (800) 488-8999 • (626) 336-4561 • Fax: (626) 961-2200 • www.acorneng.com • E-mail: info@acorneng.com

MGI SpecBuilder™ — Configure products and create specs with ease. — Get Started www.mgispecbuilder.com

Penal-Ware® 1672 : Drinking Fountain - ADA 2010 Compliant

WALL THICKNESS AND TYPE (Must Specify)
Thickness ________ Type: ❑ Concrete ❑ Block ❑ Steel

MODEL NUMBER AND OPTIONS SELECTION:

BASE MODEL NUMBER
☑ 1672 Drinking Fountain - ADA Compliant

FIXTURE MOUNTING AND WASTE (Must Specify)
☑ -1 Off-Floor, Wall Outlet

BUBBLER SELECTION (Must Specify)
❑ -BC Bubbler, Code
❑ -BP Bubbler, Penal
❑ -BPH Bubbler, Hemispherical

VALVE SELECTION (Must Specify)
Air-Control (Pneumatic)
❑ -03 Single Temp, Non-Metering

Master-Trol® (Electronic)
❑ -EVS1 Single Temp
❑ -EVSP1 Single Temp, Piezo Button

Master-Trol® PLUS (Electronic)
❑ -MTP1 Single Temp
❑ -MTPP1 Single Temp, Piezo Button
-MTP VALVE OPTION
❑ -PFB Power Failure Bypass (Provides drinking water in the event of power failure)

Time-Trol® (Electronic)
❑ -MVC1 Single Temp
❑ -MVC1-BAT Single Temp Battery Powered (Batteries Not Included)

Programmable (Electronic) w/9VDC Plug-In Transformer
❑ -PPZ1 Single Temp Programmable Piezo Button

Valve By Others
❑ -9 Punched for Valve by Others

VALVE OPTIONS
❑ -BRS Brass Body Valve
❑ -CI Cycle Interrupt for Time-Trol® Valves
❑ -MA2 Manifolded, 2-Stack
❑ -MA3 Manifolded, 3-Stack (N/A with -PFB option)
❑ -MA4 Manifolded, 4-Stack (N/A with -PFB option)
❑ -PBH Hemispherical Pushbutton
❑ -TF Transformer, 120VAC to 24VAC (-MVC option only)

CABINET OPTIONS
❑ -FMT Fixture Mounted Trim
❑ -TG 12 Gage Cabinet

LAVATORY WASTE OPTIONS
❑ -LW1 Thru-Wall Waste Extension with P-Trap
❑ -LWE Lavy Waste Extension (3" Standard) Specify Length Beyond Fixture: ________

PRODUCT OPTIONS
❑ -EG Enviro-Glaze, Specify Color: ________
❑ -MT Metal Template (Only 1 Required Per Project)
❑ -SW Wall Sleeve
❑ -VAC AcornVac System

Please visit ***www.acorneng.com*** for most current specifications.

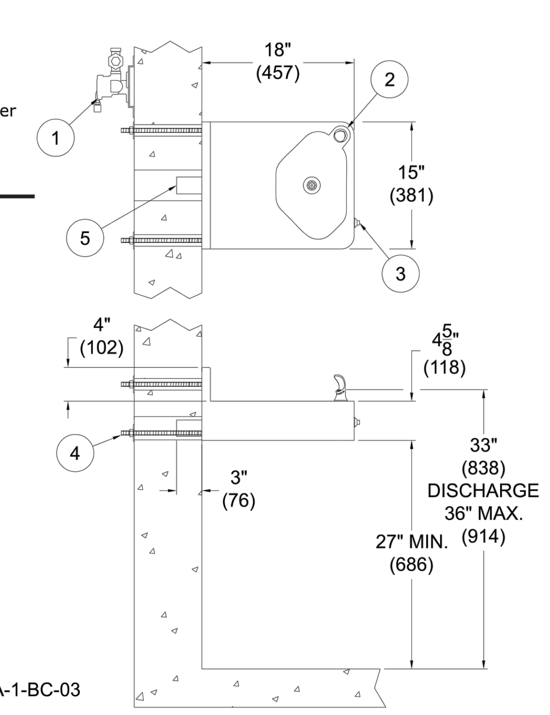

NOTES:
1. -03 Air-Control Valve
2. (-BC) Drinking Bubbler
3. Valve Pushbutton
4. Wall Mounting Hardware
5. Lavy Waste Outlet

1672ADA-1-BC-03

Important: Installation instructions and current rough-in are furnished with each fixture. Do not rough in without certified dimensions.
Dimensions are subject to manufacturer's tolerance of plus or minus 1/4" and change without notice. Acorn assumes no responsibility for use of void or superseded data. © Copyright 2009 Acorn Engineering Company

Selection Summary	Approved for Manufacturing
Model No. & Option________	Company________Title________
Quantity________	Signature________ Date________

Acorn Engineering Company • 15125 Proctor Avenue • P.O. Box 3527 • City of Industry, CA 91744-0527 U.S.A.
Tel: (800) 488-8999 • (626) 336-4561 • Fax: (626) 961-2200 • www.acorneng.com • E-mail: info@acorneng.com

MGI SpecBuilder™ — Configure products and create specs with ease. — Get Started www.mgispecbuilder.com

Penal-Ware®: 1741FA Penal-Pak - Wall Shower - Front Access

WALL THICKNESS AND TYPE (Must Specify)
Thickness ________ Type: ❑ Concrete ❑ Block ❑ Steel

MODEL NUMBER AND OPTIONS SELECTION

BASE MODEL NUMBER
☑ 1741FA Penal-Pak Wall Shower - Front Access

VALVE SELECTION (Must Specify)
Air-Trol (Pneumatic)
❑ -03-M Single Temp, Metering
❑ -04-M Hot & Cold, Metering

Master-Trol® (Electronic)
❑ -EVS1 Single Temp
❑ -EVS2 Hot & Cold
❑ -EVSP1 Single Temp, Piezo Button
❑ -EVSP2 Hot & Cold, Piezo Buttons

Master-Trol® PLUS (Electronic)
❑ -MTP1 Single Temp
❑ -MTP2 Hot & Cold
❑ -MTPP1 Single Temp, Piezo Button
❑ -MTPP2 Hot & Cold, Piezo Buttons

Time-Trol® (Electronic)
❑ -MVC1 Single Temp
❑ -MVC2 Hot & Cold

Programmable (Electronic) w/9VDC Plug-In Transformer
❑ -PPZ1 Single Temp Programmable Piezo Button
❑ -PPZ2 Hot & Cold Programmable Piezo Button

Valve By Others
❑ -9 Punched for Valve by Others

VALVE OPTIONS
❑ -BRS Brass Body Valve
❑ -PBH Hemispherical Pushbutton
❑ -TF Transformer, 120VAC to 24VAC (-MVC option only)

SHOWERHEAD OPTIONS
❑ -CSH Conical Showerhead
❑ -F Flow Control
❑ 1.4 GPM ❑ 1.6 GPM
❑ 2.0 GPM (Not available in California)
❑ -PYY Penal Lockable Universal Ball Joint
❑ -PZZ Penal Lockable Up-Down Ball Joint
❑ -SSV Space Saver Showerhead 20 Degree Discharge

PRODUCT OPTIONS
❑ -D Soap Dish
❑ -EG Enviro-Glaze, Specify Color:______________
❑ -RD Recessed Soap Dish

Please visit *www.acorneng.com* for most current specifications.

NOTES:
1. Optional -03-M Air-Control Valve
2. Penal Shower Head
3. Penal Pushbutton
4. Optional -D Surface Mounted Soap Dish
5. Wall Mounting Anchors (By Others)

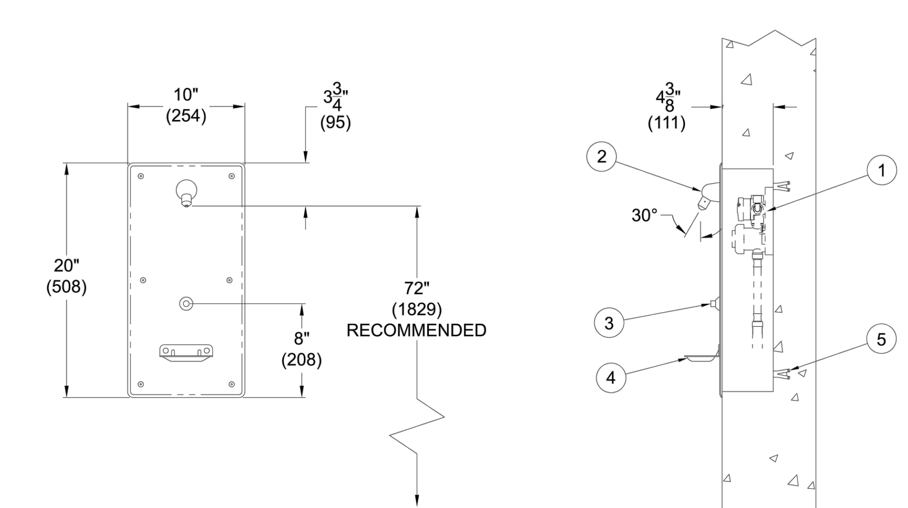

1741FA-03-M-D

Important: Installation instructions and current rough-in are furnished with each fixture. Do not rough in without certified dimensions.
Dimensions are subject to manufacturer's tolerance of plus or minus 1/4" and change without notice. Acorn assumes no responsibility for use of void or superseded data. © Copyright 2006 Acorn Engineering Company

Selection Summary	Approved for Manufacturing
Model No. & Option________	Company________Title________
Quantity________	Signature________ Date________

Acorn Engineering Company • 15125 Proctor Avenue • P.O. Box 3527 • City of Industry, CA 91744-0527 U.S.A.
Tel: (800) 488-8999 • (626) 336-4561 • Fax: (626) 961-2200 • www.acorneng.com • E-mail: info@acorneng.com

GALVESTON COUNTY
BEACH PAVILION
CRYSTAL BEACH, TX 77650

BE-Arc LLC Project No : C-13-007.01

ibis Engineering
REG # F-11156
P.O. Box 55171
Galveston, Texas 77555
PH 409.621.6740

THIS PRINT IS THE PROPERTY OF IBIS ENGINEERING IT MUST NOT BE TRACED OR REPRODUCED IN ANY MANNER NOR SHALL IT BE SUBMITTED WITHOUT PRIOR WRITTEN CONSENT FROM IBIS ENGINEERING.

BRAX EASTERWOOD
DESIGN
2728 AVENUE Q SUITE 2
GALVESTON TEXAS 77550
PHONE 409-354-8976
EASTERWOOD@BEAIA.COM

DESIGN REVIEW

DATE	REVISION

DESIGN DEVELOPMENT

DATE ISSUED:
9/28/2017

COPYRIGHT 2017

P2.3

STATE OF TEXAS
NORMAN S. HOFFMAN
95483

The seal appearing on this document was authorized by NORMAN HOFFMAN P.E. 95483 8/22/2017

PLUMBING LEGEND

SYMBOL	DESCRIPTION
SAN	SANITARY OR WASTE PIPING ABOVE GRADE (SAN)
SAN	SANITARY OR WASTE PIPING BELOW GRADE (SAN)
GW	GREASE WASTE PIPING ABOVE GRADE (GW)
GW	GREASE PIPING BELOW GRADE (GW)
- - - - - - -	VENT PIPING ABOVE OR BELOW GRADE (V)
SD	STORM PIPING ABOVE GRADE (SD)
SD	STORM PIPING BELOW GRADE (SD)
OFD	OVERFLOW STORM PIPING ABOVE GRADE (OFD)
CW	COLD WATER PIPING (CW)
HW	HOT WATER PIPING (HW)
HWR	HOT WATER RETURN PIPING (HWR)
TW	TEMPERED WATER (TW)
TP	TRAP PRIMER LINE (TP)
FIRE	FIRE PROTECTION WATER PIPING (FIRE)
	FLOW DIRECTIONAL ARROW
	SHUT-OFF VALVE
	BALANCING VALVE (BV)
	SOLENOID VALVE (SV)
	BALL VALVE (BV)
	BUTTERFLY VALVE
	GAS PLUG VALVE (GPV)
	HORIZONTAL SWING CHECK
	UNION
	Y-STRAINER
	REDUCER OR INCREASER
	ECCENTRIC REDUCER
	REDUCED PRESSURE BACKFLOW PREVENTER (RPZ)
	PIPING DOWN
	RISE OR DROP PIPING
	PIPING UP -OR- PIPING UP & DOWN
	CAP ON END OF PIPE
	CLEANOUT (WALL OR CEILING) (CO)
	FLOOR CLEANOUT (FCO)
	EXTERIOR CLEANOUT WITH 18"x18"x4" CONCRETE PAD (ECO)
	TWO-WAY CLEANOUT (PROVIDE 18"x24"x4" CONCRETE PAD OUTSIDE)
	PRESSURE REDUCING VALVE (PRV)
	BRANCH CONNECTION OUT OF TOP
	BRANCH CONNECTION OUT OF BOTTOM
	BRANCH CONNECTION OUT OF SIDE
	WYE & 1/8TH BEND BRANCH CONNECTION
	WYE BRANCH CONNECTION
	HOSE BIBB
	PRESSURE GAUGE WITH COCK
	THERMOMETER
	GAS PRESSURE REGULATOR
	TEST COCK
	GAS METER
	WALL HYDRANT
	VALVE IN RISE
	ASME TEMPERATURE & PRESSURE RELIEF VALVE
	VACUUM RELIEF VALVE
	ANGLE VALVE
1	REFER TO KEYED NOTE
	FLOOR SINK (FS)
	FLOOR DRAIN (FD)
	FLOOR DRAIN WITH P-TRAP (FD)
	FLOOR DRAIN WITH P-TRAP AT 45° ANGLE (FD)
	HUB DRAIN (HD)
	ACCESS PANEL FOR TRAP PRIMER
AP	ACCESS PANEL LOCATION SYMBOL
	SHOCK ABSORBER WITH ACCESS PANEL
	AIR CHAMBER
	EXISTING
	NEW
	CONNECT NEW TO EXISTING
	INVERT ELEVATION
	QUARTER OF AN INCH SLOPE
	1/8TH OF AN INCH SLOPE
	1/16TH OF AN INCH SLOPE
	DELTA CHANGE SYMBOL
	RISER FLAG

NOTE: NOT ALL SYMBOLS MAY APPLY TO THIS PROJECT.

PLUMBING GENERAL NOTES

1. REFER TO CIVIL DRAWINGS FOR CONTINUATION OF DOMESTIC WATER, FIRE PROTECTION WATER, AND SANITARY WASTE UTILITIES.
2. REFER TO CIVIL DRAWINGS FOR SIZE AND LOCATION OF DOMESTIC WATER METER ON SITE.
3. REFER TO ARCHITECTURAL/CIVIL DRAWINGS FOR BUILDING FINISHED FLOOR ELEVATION.
4. FIELD VERIFY EXACT LOCATION, SIZE, DEPTH, DIRECTION OF FLOW, CAPACITY, PIPE MATERIAL AND CONDITION OF EXISTING SITE DOMESTIC WATER, FIRE PROTECTION WATER, AND SANITARY WASTE PIPING PRIOR TO BEGINNING CONSTRUCTION TO ENSURE THAT PROPER CONNECTIONS TO AND EXTENSION OF SUCH UTILITIES CAN BE MADE.
5. INVERT ELEVATIONS LISTED ARE APPROXIMATE. PRIOR TO CONSTRUCTION, COORDINATE FINAL INVERT ELEVATIONS OF BUILDING SANITARY OUTFALLS AND SITE PIPING WITH SITE UTILITY CONTRACTOR. MAKE ADJUSTMENTS AS REQUIRED TO ENSURE PROPER CONNECTIONS TO SITE UTILITIES.
6. PRIOR TO BEGINNING CONSTRUCTION, COORDINATE PLUMBING BACKFLOW PREVENTION REQUIREMENTS WITH THE LOCAL CODE AUTHORITY AND PROVIDE AS DIRECTED.
7. CONTRACTOR SHALL COORDINATE ROUTING OF PIPING BELOW SLAB WITH COLUMN FOOTINGS, GRADE BEAMS, UNDERGROUND PLUMBING AND ELECTRICAL UTILITIES, AND OTHER SUB-SURFACE BUILDING ELEMENTS.
8. CONTRACTOR SHALL COORDINATE ROUTING OF PIPING IN CEILING SPACES WITH MECHANICAL AND ELECTRICAL EQUIPMENT, DUCTWORK AND CONDUIT. SHOULD A CONFLICT OCCUR THE CONTRACTOR SHALL NOTIFY THE ARCHITECT/ENGINEER PRIOR TO INSTALLING AN ALTERNATE PIPING PLAN.
9. MAINTAIN MINIMUM 15'-0" DISTANCE BETWEEN VENT TERMINALS THROUGH ROOF AND ALL FRESH AIR INTAKES.
10. COORDINATE ALL FIXTURE AND EQUIPMENT LOCATIONS AND CONNECTION REQUIREMENTS WITH LATEST ARCHITECTURAL DRAWINGS, SPECIFICATIONS, AND MANUFACTURER RECOMMENDATIONS PRIOR TO ANY ROUGH-INS.
11. DO NOT ROUGH-IN FROM THESE DRAWINGS. REFER TO LATEST ARCHITECTURAL DRAWINGS FOR DIMENSIONED LOCATIONS.
12. CONTRACTOR TO COORDINATE ALL WORK WITH THE WORK OF OTHER TRADES TO AVOID CONFLICTS AND TO MINIMIZE INTERRUPTION OF SERVICES.
13. ALL WORK, METHODS AND INSTALLATIONS INVOLVED IN THE PLUMBING DESIGN SHALL BE IN ACCORDANCE WITH THE CITY BUILDING CODE AND INSPECTION REGULATIONS AND ALL OTHER OFFICIALS HAVING JURISDICTION.
14. UPON COMPLETION OF WORK, THOROUGHLY ROD OUT AND FLUSH ALL SANITARY PIPING TO ENSURE IT IS FREE FROM BLOCKAGES.

GENERAL CONDITIONS

1. ALL WORK SHALL BE INSTALLED IN ACCORDANCE WITH THE GOVERNING LOCAL, STATE, AND NATIONAL CODE AS THE MINIMUM REQUIREMENT WHETHER OR NOT SPECIFIED OF SHOWN ON DRAWINGS. DRAWINGS SHALL GOVERN WHERE A LARGER SIZE, QUANTITY, OR BETTER QUALITY IS SHOWN THAN IS REQUIRED BY CODE(S). AS USED IN THE FOLLOWING, "CONTRACTOR" SHALL MEAN THE CONTRACTOR INSTALLING WORK UNDER THIS DIVISION OF THE WORK.
2. DRAWINGS ARE DIAGRAMMATIC IN NATURE AND DO NOT SHOW EVERY REQUIRED MISCELLANEOUS DETAILS, SUPPORT, FITTINGS, ETC. FURNISH AND INSTALL ALL MATERIALS REQUIRED FOR A COMPLETE FUNCTIONING SYSTEM WHETHER OR NOT SHOWN ON THE DRAWINGS.
3. COORDINATE INSTALLATION WITH OTHER TRADES TO ASSURE INSTALLATION OF MATERIALS AND EQUIPMENT AS REQUIRED FOR THE PROPER SEQUENCE OF CONSTRUCTION. VERIFY AND INSTALL WITHIN INTENDED SPACE REQUIREMENTSWITH PROVISIONS FOR ACCESS FOR SERVICE AND REMOVAL.
4. CONTRACTOR SHALL INSPECT THE SITE AND BE INFORMED OF THE CONDITIONS AFFECTING THE WORK, NO ADDITIONAL ALLOWANCE WILL BE MADE BECAUSE OF FAILURE TO OBTAIN INFORMATION ON SITE CONDITIONS, COORDINATE THE WORK AS REQUIRED AND DIRECTED BY LOCAL UTILITY COMPANIES STANDARDS.
5. ALL WORK SHALL BE INSTALLED IN THE FIRST CLASS MANNER CONSISTENT WITH INDUSTRY STANDARDS. MATERIALS OR EQUIPMENT WHICH DO NOT PRESENT A READONABLY NEAT OR WORKMANLIKE APPEARANCE MAY BE DIRECTED BY THE ARCHITECT TO BE REMOVED AND REPLACED AT NO ADDITIONAL COST.
6. FURNISH 6 COPIES OR BROCHURES/SHOP DRAWINGS FOR APPROVAL PRIOR TO STARTING WORK. AT PROJECT CLOSEOUT, PROVIDE THREE COPIES OPERATING MANUALS, THREE COPIES OF "AS-BUILT" RECORD DRAWINGS, AND INSTRUCT OWNER IN THE OPERATION OF ALL EQUIPMENT.
7. ALL MISCELLANEOUS WORK SUCH AS EXCAVATION BACKFILL, CONCRETE, PADS, SLEEVES, ETC. REQUIRED TO PERFORM WORK UNDER THE DIVISION SHALL BE FURNISHED AND INSTALLED BY THE CONTRACTOR OR THIS DIVISION OF WORK. OBTAIN AND PAY FOR ALL REQUIRED LICENSES, PERMITS, AND CERTIFICATES REQUIRED FOR WORK UNDER THIS SECTION.
8. ALL WORK SHALL BE GUARENTEED AGAINST DEFECTS IN MATERIALS AND WORKMANSHIP FOR A PERIOD OF (1) YEAR BEYOND FINAL ACCEPTANCE IN A FORM ACCEPTABLE TO THE ARCHITECT. GUARANTEE SHALL INCLUDE CORRECTIONS OR REPLACEMENT OF DAMAGE OR REPLACEMENT TO OTHER'S WORK OR MATERIALS CAUSED BY WORK UNDER THIS DIVISION.

REQUIREMENTS

1. PLUMBING CONTRACTOR SHALL FURNISH AND INSTALL ALL HOT AND COLD WATER PIPING SYSTEMS, DRAINAGE, WASTE, AND VENT PIPING SYSTEMS, FIXTURES AND HARDWARE, AND WATER HEATERS INSTALLED DIELECTRIC UNIONS AT ALL DISSINILIR METAL CONNECTIONS.
2. PROVIDE 1 SET OF AIR CHAMBERS AT ALL WATER CLOSET TANKS, BACK FLOW PREVENTORS SHALL BE PROVIDED WHERE SHOWN ON THE DRAWINGS AND AS REQUIRED BY CODE.
3. CUTOFF VALVES, STOPS, SHALL BE PROVIDED WHERE SHOWN ON DRAWINGS AND AT ALL FIXTURE CONNECTIONS. CLEAN OUTS SHALL BE PROVIDED AS REQUIRED BY CODE AND AS SHOWN ON THE DRAWINGS.
4. CONDENSATE DRAIN LINES SHALL BE MINIMUM 3/4", WITH TRAP, INSULATE 1ST 10'-0" OF CONDENSATE DRAIN WITH 1/2" INSULATION.
5. TEST ALL WATER SYSTEMS IN PRESENCE OF OWNER'S REPRESENTATIVE AT MINIMUM 100 PSIG FOR 8 HOURS. SANITARY, WASTE AND VENTS SHALL BE TESTED WITH 10'-0" HEAD OF WATER FOR 8 HOURS WITH LEVEL OF WATER TO REMAIN UNCHANGED.
6. INSTALL ALL PIPING SYSTEMS SO THAT THEY WILL NOT BE SUBJECT TO ANY UNDUE STRAINS OR STRESSES AND PROVISIONS SHALL BE MADE FOR THE EXPANSION, AND CONTRACTION, AND STRUCTURAL SETTLEMENT. INSTALL A MINIMUM 6" SAND FILL AROUND ALL UNDERGROUND PIPES.
7. SANITIZE/FLUSH DOMESTIC WATER SYSTEM PER STATE STANDARDS. CHECK WATER PRESSURE AVAILABLE AT SITE AND INSTALL PRESSURE REDUCER IF REQUIRED TO LIMIT 80PSI AT BUILDING ENTRANCE.
8. ALL WATER PIPING AND TRAPS IN EXTERIOR WALLS AND IN PLENUM SPACE SHALL BE INSULATED WITH MIN. 1" ARMFLEX VAPOR SHIELD INSULATION.
9. CONFIRM ALL TRAPS ARE FULL OF WATER AFTER INSTALLATION.
10. ALL PENETRATIONS THROUGH FIRE RATED WALLS AND FLOOR CEILING ASSEMBLIES SHALL BE INSTALLED AND SEALED TO MAINTAIN FIRE RATING WITH U.L. LISTED ASSEMBLIES, MATERIALS, AND SEALANTS. VERIFY ACTUAL REQUIREMENTS WITH LOCAL BUILDING OFFICIALS.
11. UNIONS SHALL BE INSTALLED IN THE WATER SUPPLY PIPING WITHIN 12" OF REGULATING EQUIPMENT, WATER HEATER, CONDITIONING AND SIMILIAR EQUIPMENT WHICH MAY REQUIRE SERVICE BY REMOVAL OR REPLACEMENT IN A MANNER WHICH WILL FACILITATE ITS READY REMOVAL.
12. USE PROSET FIRESTOP WASHER/REFRIGERATOR BOX DESIGN PS/PV 120-08 IN RATED WALLS.
13. WATER PIPING INSDE THE BUILDING SHALL BE SEAMLESS ASTM B 88 TYPE L COPPER WATER TUBE WROUGHT COPPER FITTINGS, ANSI B16.22. SOLDER MATERIAL SHALL BE 95.5% LEAD FREE, ASTM B 32. THE USE OF DRILLED-T CONNECTIONS IS NOT PERMITTED.

    WATER PIPING BELOW SLAB SHALL BE ASTM B 88 TYPE K COPPER WATER TUBE WITH WROUGHT COPPER FITTINGS, ANSI B16.22. ALL JOINTS SHALL BE BRAZED.
14. DRAIN, WASTE, PIPING, AND FITTINGS SHALL BE SCHEDULE 40 POLYVINYL CHLORIDE CONFORMING TO ASTM D-2665 WITH SOLVENT WELDED JOINTS.
15. VENT PIPING SHALL BE CAST IRON. DRAIN PIPING IN PLENUM SHALL BE CAST IRON OR COPPER.

THERMOSTATIC MIXING VALVES

ITEM NO.	INLET HOT WATER TEMP (°F)	OUTLET MIXED TEMP (°F)	MINIMUM FLOW (GPM)	DESIGN FLOW (GPM)	PRESSURE DROP @ DESIGN FLOW (PSI)	VALVE FINISH	MANUFACTURER / MODEL NO.
TMV-1	140°	110°	0.5	4	5.0	ROUGH BRONZE	SYMMONS THERMIXER 7-120-CKX
TMV-2	140°	110°	–	7	5.0	ROUGH BRONZE	SPEAKMAN SE-370

NOTES:
1. MAKE WATER CONNECTIONS TO THERMOSTATIC MIXING VALVE(S) IN ACCORDANCE WITH THE MANUFACTURER'S RECOMMENDATIONS.
2. PROVIDE PIPE INCREASERS AND/OR VALVES AS REQUIRED.

WATER HAMMER DAMPERS

SYMBOL / SIZE	FIXTURE UNITS	CHAMBER LENGTH	SWEAT CONNECTION
A	1-11	8-1/4"	1/2"

NOTES
1. SOUIX CHIEF HYDRA-RESTER 650 SERIES WATER HAMMER ARRESTER

COUNTY APPROVAL:
SIGNATURE ____________________________ DATE____________

FIXTURE VENTS

2009 IPC, TABLE 906.1
DISTANCE OF FIXTURE TRAP FROM VENT

MAXIMUM FIXTURE UNITS ALLOWED PER SLOPE

SIZE OF FIXTURE DRAIN (IN.)	SIZE OF TRAP (IN.)	SLOPE (IN/FT)	DISTANCE FROM TRAP (FT)
1 1/4"	1 1/4"	1/4	5'
1 1/2"	1 1/4"	1/4	5'
1 1/2"	1 1/2"	1/4	6'
2"	1 1/2"	1/4	6'
2"	2"	1/4	8'
3"	3"	1/8	12'
4"	4"	1/8	16'

FIXTURE WATER SUPPLY PIPES

2009 IPC, TABLE 604.5

MINIMUM SIZES OF FIXTURE WATER SUPPLY PIPES

FIXTURE	MINIMUM PIPE SIZE (IN.)
BATHTUBS	1/2"
KITCHEN SINK	1/2"
LAUNDRY	1/2"
LAVATORY	1/2"
SHOWER	1/2"
WATER CLOSET, FLUSH TANK	1/2"

SANITARY SEWER

2009 IPC, TABLE 710.1(1)
BUILDING DRAINS AND SEWERS

MAXIMUM FIXTURE UNITS ALLOWED PER SLOPE (INCLD BRANCHES)

PIPE DIA.	1/8" PER FT	1/4" PER FT	1/2" PER FT
3"	36	42	50
4"	180	216	250
5"	390	450	575
6"	700	840	1000

MIN. SIZE OF AN BLDG DRAIN SERVING A WATER CLOSET IS 3"

NOTE:
ALL BUILDING ARE (3) STORY UNLESS NOTED OTHERWISE. ALL LINE SIZES ARE BASED ON 1/4" PER FT. SLOPE (UNC). PROVIDE CLEANOUTS PER IPC 708.3.1: 1 PER 100' (ONE PER HUNDRED FEET)

SANITARY SEWER

2009 IPC, TABLE 710.1(2)
HORIZONTAL FIXTURES BRANCHES AND STACKS

MAXIMUM FIXTURE UNITS

PIPE DIA.	TOTAL FOR HOR BRANCH	STACK BRANCH INTERVAL	3 STORY STACK	4 STORY STACK
3"	20	20	48	72
4"	160	90	240	500
5"	360	200	540	1100
6"	620	350	960	1900

MIN. SIZE SERVING WC=3"

WATER CONSERVATION

2009 IPC, TABLE 604.4

MAXIMUM WATER USAGE PER FIXTURE

PRIVATE WATER CLOSETS	1.6 GAL/FLUSH
LAVATORY	2.2 GPM AT 60 PSI
PRIVATE SINK/FAUCETS	2.2 GPM AT 60 PSI
SHOWERHEADS	2.5 GPM AT 80 PSI

NOTE:
VERIFY WATER PRESSURE AT BUILDING ENTRANCE AND INSTALL PRESSURE REDUCING VALVE TO LIMIT 80 PSI PER IPC 604.8
WATER PIPING SIZING BASED ON PROVIDING A MINIMUM OF 15 PSI AT THE MOST REMOTE OUTLET.

GALVESTON COUNTY
BEACH PAVILION
CRYSTAL BEACH, TX 77650

BE-Arc LLC Project No : C-13-007.01

Ibis Engineering
REG # F-11156
P.O. Box 55171
Galveston, Texas 77555
PH 409.621.6740

THIS PRINT IS THE PROPERTY OF IBIS ENGINEERING IT MUST NOT BE TRACED OR REPRODUCED IN ANY MANNER NOR SHALL IT BE SUBMITTED WITHOUT PRIOR WRITTEN CONSENT FROM IBIS ENGINEERING.

BRAX EASTERWOOD
DESIGN
2728 AVENUE Q SUITE 2
GALVESTON TEXAS 77550
PHONE 409-354-8976
EASTERWOOD@BEAIA.COM

DESIGN REVIEW

DATE	REVISION

DESIGN DEVELOPMENT

DATE ISSUED:
9/28/2017

COPYRIGHT 2017

P3.0

PLUMBING SPECIFICATIONS

DOMESTIC WATER PIPING— COPPER TUBE AND FITTINGS

A. HARD COPPER TUBE: ASTM B 88, TYPE L (ASTM B 88M, TYPE B) WATER TUBE, DRAWN TEMPER.
1. CAST—COPPER SOLDER—JOINT FITTINGS: ASME B16.18, PRESSURE FITTINGS.
2. WROUGHT—COPPER SOLDER—JOINT FITTINGS: ASME B16.22, WROUGHT—COPPER PRESSURE FITTINGS.
3. BRONZE FLANGES: ASME B16.24, CLASS 150, WITH SOLDER—JOINT ENDS.
4. COPPER UNIONS: MSS SP—123, CAST—COPPER—ALLOY, HEXAGONAL —STOCK BODY, WITH BALL —AND—SOCKET, METAL—TO—METAL SEATING SURFACES. AND SOLDER—JOINT OR THREADED ENDS.

B. SOFT COPPER TUBE: ASTM B 88, TYPE K (ASTM B 88M, TYPE A) AND ASTM B 88, TYPE L (ASTM B 88M, TYPE B) WATER TUBE, ANNEALED TEMPER. COPPER SOLDER—JOINT FITTINGS: ASME B16.22, WROUGHT—COPPER PRESSURE FITTINGS. COPPER PRESSURE—SEAL—JOINT FITTINGS:
MANUFACTURERS: SUBJECT TO COMPLIANCE WITH REQUIREMENTS, PROVIDE PRODUCTS BY ONE OF THE FOLLOWING:
1. NIBCO INC.
2. VIEGA; PLUMBING AND HEATING SYSTEMS.
NPS 2 (DN 50) AND SMALLER: WROUGHT—COPPER FITTING WITH EPDM—RUBBER O—RING SEAL IN EACH END.
NPS 3 AND NPS 4 (DN 80 AND DN 100): CAST—BRONZE OR WROUGHT—COPPER FITTING WITH EPDM—RUBBER 0—RING SEALS IN EACH END.

C. DIELECTRIC FITTINGS
GENERAL REQUIREMENTS' ASSEMBLY OF COPPER ALLOY AND FERROUS MATERIALS WITH SEPARATING NONCONDUCTIVE INSULATING MATERIAL. INCLUDE END CONNECTIONS COMPATIBLE WITH PIPES TO BE JOINED.

D. DRAWING PLANS, SCHEMATICS, AND DIAGRAMS INDICATE GENERAL LOCATION AND ARRANGEMENT OF DOMESTIC WATER PIPING. INDICATED LOCATIONS AND ARRANGEMENTS ARE USED TO SIZE PIPE AND CALCULATE FRICTION LOSS, EXPANSION, AND OTHER DESIGN CONSIDERATIONS. INSTALL PIPING AS INDICATED UNLESS DEVIATIONS TO LAYOUT ARE APPROVED ON COORDINATION DRAWINGS.

E. INSTALL COPPER TUBING UNDER BUILDING SLAB ACCORDING TO CDA'S "COPPER TUBE HANDBOOK."

F. INSTALL SHUTOFF VALVE IMMEDIATELY UPSTREAM OF EACH DIELECTRIC FITTING.

G. INSTALL DOMESTIC WATER PIPING LEVEL V!TH 0.125 PERCENT SLOPE DOWNWARD TOWARD DRAIN AND PLUMB.

H. INSTALL PIPING CONCEALED FROM VIEW AND PROTECTED FROM PHYSICAL CONTACT BY BUILDING OCCUPANTS UNLESS OTHERI'!SE INDICATED AND EXCEPT IN EQUIPMENT ROOMS AND SERVICE AREAS.

I. INSTALL PIPING INDICATED TO BE EXPOSED AND PIPING IN EQUIPMENT ROOMS AND SERVICE AREAS AT RIGHT ANGLES OR PARALLEL TO BUILDING WALLS. DIAGONAL RUNS ARE PROHIBITED UNLESS SPECIFICALLY INDICATED OTHERWISE.

J. INSTALL PIPING ABOVE ACCESSIBLE CEILINGS TO ALLOW SUFFICIENT SPACE FOR CEILING PANEL REMOVAL, AND COORDINATE WITH OTHER SERVICES OCCUPYING THAT SPACE.

K. INSTALL PIPING ADJACENT TO EQUIPMENT AND SPECIAL TIES TO ALLOW SERVICE AND MAINTENANCE.

L. INSTALL PIPING TO PERMIT VALVE SERVICING.

M. INSTALL NIPPLES, UNIONS, SPECIAL FITTINGS, AND VALVES WITH PRESSURE RATINGS THE SAME AS OR HIGHER THAN SYSTEM PRESSURE RATING USED IN APPLICATIONS BELOW UNLESS OTHERWISE INDICATED.

N. INSTALL PIPING FREE OF SAGS AND BENDS.

O. INSTALL FITTINGS FOR CHANGES IN DIRECTION AND BRANCH CONNECTIONS.

P. INSTALL UNIONS IN COPPER TUBING AT FINAL CONNECTION TO EACH PIECE OF EQUIPMENT, MACHINE, AND SPECIALTY.

Q. INSTALL SLEEVES FOR PIPING PENETRATIONS OF WALLS, CEILINGS, AND FLOORS.

R. INSTALL ESCUTCHEONS FOR PIPING PENETRATIONS OF WALLS, CEILINGS, AND FLOORS.

S. INSTALL SHUTOFF VALVE CLOSE TO WATER MAIN ON EACH BRANCH AND RISER SERVING PLUMBING FIXTURES OR EQUIPMENT, ON EACH WATER SUPPLY TO EQUIPMENT, AND ON EACH WATER SUPPLY TO PLUMBING FIXTURES THAT DO NOT HAVE SUPPLY STOPS. USE BALL VALV£S FOR PIPING NPS 2 (DN 50) AND SMALLER. USE GATE VALVES FOR PIPING NPS 2—1/2 (DN 65) AND LARGER.

T. HANGER AND SUPPORT INSTALLATION: SUPPORT VERTICAL PIPING AND TUBING AT BASE AND AT EACH FLOOR.

U. ROD DIAMETER MAY BE REDUCED ONE SIZE FOR DOUBLE—ROD HANGERS, TO A MINIMUM OF 3/8 INCH (10 MM).

V. INSTALL HANGERS FOR COPPER TUBING WITH THE FOLLOWING MAXIMUM HORIZONTAL SPACING AND MINIMUM ROD DIAMETERS:
1. NPS 3/4 (DN 20) AND SMALLER: 60 INCHES (1500 MM) WITH 3/8—INCH (10—MM) ROD.
2. NPS 1 AND NPS 1—1/4 (DN 25 AND DN 32): 72 INCHES (1BDD MM) WITH 3/8—INCH (10—MM) ROD.
3. NPS 1—1/2 AND NPS 2 (DN 4D AND DN 50): 96 INCHES (2400 MM) WITH 3/8—INCH (10—MM) ROD.
4. NPS 2—1/2 (DN 65): 108 INCHES (2700 MM) WITH 1/2—INCH (13—MM) ROD.
5. NPS 3 TO NPS 5 (DN 80 TO DN 125): 10 FEET (3 M) WITH 1/2—INCH (13—MM) ROD.
6. NPS 6 (DN 150): 10 FEET (3 M) WITH 5/8—INCH (16—MM) ROD.
7. NPS 8 (DN 200): 10 FEET (3 M) WITH 3/4—INCH (19—MM) ROD.

W. INSTALL SUPPORTS FOR VERTICAL COPPER TUBING EVERY 10 FEET (3 M).

X. FIELD QUALITY CONTROL PERFORM TESTS AND INSPECTIONS. PIPING INSPECTIONS:
1. DO NOT ENCLOSE, COVER, OR PUT PIPING INTO OPERATION UNTIL IT HAS BEEN INSPECTED AND APPROVED BY AUTHORITIES HAVING JURISDICTION.
2. DURING INSTALLATION, NOTIFY AUTHORITIES HAVING JURISDICTION AT LEAST ONE DAY BEFORE INSPECTION MUST BE MADE. PERFORM TESTS SPECIFIED BELOW IN PRESENCE OF AUTHORITIES HAVING JURISDICTION:
3. ROUGHING—IN INSPECTION' ARRANGE FOR INSPECTION OF PIPING BEFORE CONCEALING OR CLOSING—IN AFTER ROUGHING—IN AND BEFORE SETTING FIXTURES.
4. FINAL INSPECTION: ARRANGE FINAL INSPECTION FOR AUTHORITIES HAVING JURISDICTION TO OBSERVE TESTS SPECIFIED BELOW AND TO ENSURE COMPLIANCE WITH REQUIREMENTS.
5. REINSPECTION: IF AUTHORITIES HAVING JURISDICTION FIND THAT PIPING IMLL NOT PASS TESTS OR INSPECTIONS, MAKE REQUIRED CORRECTIONS AND ARRANGE FOR REINSPECTION.
6. REPORTS: PREPARE INSPECTION REPORTS AND HAVE THEM SIGNED BY AUTHORITIES HAVING JURISDICTION.

Y. PIPING TESTS:
1. FILL DOMESTIC WATER PIPING. CHECK COMPONENTS TO DETERMINE THAT THEY ARE NOT AIR BOUND AND THAT PIPING IS FULL OF WATER.
2. TEST FOR LEAKS AND DEFECTS IN NEW PIPING AND PARTS OF EXISTING PIPING THAT HAVE BEEN ALTERED, EXTENDED, OR REPAIRED. IF TESTING IS PERFORMED IN SEGMENTS, SUBMIT A SEPARATE REPORT FOR EACH TEST, COMPLETE WITH DIAGRAM OF PORTION OF PIPING TESTED.
3. LEAVE NEW, ALTERED, EXTENDED, OR REPLACED DOMESTIC WATER PIPING UNCOVERED AND UNCONCEALED UNTIL IT HAS BEEN TESTED AND APPROVED. EXPOSE WORK THAT WAS COVERED DR CONCEALED BEFORE IT WAS TESTED.
4. CAP AND SUBJECT PIPING TO STATIC WATER PRESSURE OF 50 PSIG (345 KPA) ABOVE OPERATING PRESSURE, WITHOUT EXCEEDING PRESSURE RATING OF PIPING SYSTEM MATERIALS. ISOLATE TEST SOURCE AND ALLOW TO STAND FOR FOUR HOURS. LEAKS AND LOSS IN TEST PRESSURE CONSTITUTE DEFECTS THAT MUST BE REPAIRED.
5. REPAIR LEAKS AND DEFECTS WITH NEW MATERIALS AND RETEST PIPING OR PORTION THEREOF UNTIL SATISFACTORY RESULTS ARE OBTAINED.
6. PREPARE REPORTS FOR TESTS AND FOR CORRECTIVE ACTION REQUIRED.

Z. DOMESTIC WATER PIPING WILL BE CONSIDERED DEFECTIVE IF IT DOES NOT PASS TESTS AND INSPECTIONS.
AA. PREPARE TEST AND INSPECTION REPORTS.

AB. CLEAN AND DISINFECT POTABLE AND NON—POTABLE DOMESTIC WATER PIPING AS FOLLOWS:
AC. PURGE NEW PIPING AND PARTS OF EXISTING PIPING n—IAT HAVE BEEN ALTERED, EXTENDED, OR REPAIRED BEFORE USING.
AD. USE PURGING AND DISINFECTING PROCEDURES PRESCRIBED BY AUTHORITIES HAVING JURISDICTION; IF METHODS ARE NOT PRESCRIBED, USE PROCEDURES DESCRIBED IN EITHER AWWA C651 OR AWWA C652 DR FOLLOW PROCEDURES DESCRIBED BELOW:
1. FLUSH PIPING SYSTEM WITH CLEAN, POTABLE WATER UNTIL DIRTY WATER DOES NOT APPEAR AT OUTLETS.
2. FLUSH SYSTEM WITH CLEAN, POTABLE WATER UNTIL NO CHLORINE IS IN WATER COMING FROM SYSTEM AFTER THE STANDING TIME.
3. SUBMIT WATER SAMPLES IN STERILE BOTTLES TO AUTHORITIES HAVING JURISDICTION. REPEAT PROCEDURES IF BIOLOGICAL EXAMINATION SHOWS CONTAMINATION.
AE. UNDER—BUILDING—SLAB, DOMESTIC WATER PIPING, NPS 2 (DN 50) AND SMALLER, SHALL BE THE FOLLOWING:
1. SOFT COPPER TUBE, ASTM B 88, TYPE L (ASTM B 88M, TYPE B); WROUGHT—COPPER SOLDER—JOINT FITTINGS; AND BRAZED JOINTS.
AF. ABOVEGROUND DOMESTIC WATER PIPING, NPS 2 (DN 50) AND SMALLER, SHALL BE THE FOLLOWING:
1. HARD COPPER TUBE, ASTM B 88, TYPE L (ASTM B 88M, TIPE B); WROUGHT—COPPER SOLDER—JOINT FITTINGS; AND SOLDERED JOINTS.
AG. ABOVEGROUND DOMESTIC WATER PIPING, NPS 2—1/2 TO NPS 4 (DN 65 TO DN 100), SHALL BE OF THE FOLLOWING:
1. HARD COPPER TUBE, ASTM B 88, TYPE L (ASTM B 88M, TIPE B); CAST—COPPER SOLDER—JOINT FITTINGS; AND SOLDERED JOINTS.
2. GALVANIZED—STEEL PIPE; GROOVED—JOINT, GALVANIZED—STEEL—PIPE APPURTENANCES; AND GROOVED JOINTS.
AH. DRAWINGS INDICATE VALVE TYPES TO BE USED. WHERE SPECIFIC VALVE TYPES ARE NOT INDICATED, THE FOLLOWING REQUIREMENTS APPLY:
1. SHUTOFF DUTY: USE BALL VALV£S FOR PIPING NPS 2 (DN 50) AND SMALLER. USE GATE VALVES WITH FLANGED ENDS FOR PIPING NPS 2—1/2 (DN 65) AND LARGER.
2. THROTTLING DUTY: USE BALL VALVES FOR PIPING NPS 2 (DN 50) AND SMALLER. USE BALL VALVES WITH FLANGED ENDS FOR PIPING NPS 2—1/2 (DN 65) AND LARGER.
3. HOT—WATER CIRCULATION PIPING, BALANCING DUTY: CALIBRATED BALANCING VALVES.
4. DRAIN DUTY: HOSE—END DRAIN VALVES.
AI. USE CHECK VALVES TO MAINTAIN CORRECT DIRECTION OF DOMESTIC WATER FLOW TO AND FROM EQUIPMENT.
AJ. IRON GROOVED—END VALVES MAY BE USED WITH GROOVED—END PIPING.

SANITARY WASTE

A. HUB—AND—SPIGOT, CAST—IRON SOIL PIPE AND FITTINGS PIPE AND FITTINGS' ASTM A 74, SERVICE CLASS(ES). GASKETS: ASTM C 564, RUBBER.

B. HUBLESS, CAST—IRON SOIL PIPE AND FITTINGS PIPE AND FITTINGS: ASTM A 888 OR CISPI 301. SOVENT STACK FITTINGS: ASME B16.45 OR ASSE 1043, HUBLESS, CAST—IRON AERATOR AND DEAERATOR DRAINAGE FITTINGS. CISPI, HUBLESS—PIPING COUPLINGS:
MANUFACTURERS: SUBJECT TO COMPLIANCE WITH REQUIREMENTS, PROVIDE PRODUCTS BY ONE OF THE FOLLOWING:
1. ANACO—HUSKY, SD—4000.
2. MIFAB, INC.
3. MISSION RUBBER COMPANY; A DIVISION OF MCP INDUSTRIES, INC.
4. CLAMP—ALL CORP.
5. STANDARDS' ASTM C 1277 AND CISPI 310.
6. DESCRIPTION: STAINLESS—STEEL CORRUGATED SHIELD WITH STAINLESS—STEEL BANDS AND TIGHTENING DEVICES; AND ASTM C 564, RUBBER SLEEVE WITH INTEGRAL, CENTER PIPE STOP.

C. DRAWING PLANS, SCHEMATICS, AND DIAGRAMS INDICATE GENERAL LOCATION AND ARRANGEMENT OF PIPING SYSTEMS. INDICATED LOCATIONS AND ARRANGEMENTS WERE USED TO SIZE PIPE AND CALCULATE FRICTION LOSS, EXPANSION, PUMP SIZING, AND OTHER DESIGN CONSIDERATIONS. INSTALL PIPING AS INDICATED UNLESS DEVIATIONS TO LAYOUT ARE APPROVED ON COORDINATION DRAWINGS.
D. INSTALL PIPING IN CONCEALED LOCATIONS UNLESS OTHERWISE INDICATED AND EXCEPT IN EQUIPMENT ROOMS AND SERVICE AREAS.
E. INSTALL PIPING INDICATED TO BE EXPOSED AND PIPING IN EQUIPMENT ROOMS AND SERVICE AREAS AT RIGHT ANGLES OR PARALLEL TO BUILDING WALLS. DIAGONAL RUNS ARE PROHIBITED UNLESS SPECIFICALLY INDICATED OTHERWISE.
F. INSTALL PIPING ABOVE ACCESSIBLE CEILINGS TO ALLOW SUFFICIENT SPACE FOR CEILING PANEL REMOVAL.
G. INSTALL PIPING TO PERMIT VALVE SERVICING.
H. INSTALL PIPING AT INDICATED SLOPES.
I. INSTALL PIPING FREE OF SAGS AND BENDS.
J. INSTALL FITTINGS FOR CHANGES IN DIRECTION AND BRANCH CONNECTIONS.
K. INSTALL PIPING TO ALLOW APPLICATION OF INSULATION.
L. MAKE CHANGES IN DIRECTION FOR SOIL AND WASTE DRAINAGE AND VENT PIPING USING APPROPRIATE BRANCHES, BENDS, AND LONG—SWEEP BENDS. SANITARY TEES AND SHORT—SWEEP 1/4 BENDS MAY BE USED ON VERTICAL STACKS IF CHANGE IN DIRECTION OF FLOW IS FROM HORIZONTAL TO VERTICAL. USE LONG—TURN, DOUBLE Y—BRANCH AND 1/8—BEND FITTINGS IF TWO FIXTURES ARE INSTALLED BACK TO BACK OR SIDE BY SIDE WITH COMMON DRAIN PIPE. STRAIGHT TEES, ELBOWS. AND CROSSES MAY BE USED ON VENT LINES. DO NOT CHANGE DIRECTION OF FLOW MORE THAN 90 DEGREES. USE PROPER SIZE OF STANDARD INCREASERS AND REDUCERS IF PIPES OF DIFFERENT SIZES ARE CONNECTED. REDUCING SIZE OF DRAINAGE PIPING IN DIRECTION OF FLOW IS PROHIBITED.
M. LAY BURIED BUILDING DRAINAGE PIPING BEGINNING AT LOW POINT OF EACH SYSTEM. INSTALL TRUE TO GRADES AND ALIGNMENT INDICATED, WITH UNBROKEN CONTINUITY OF INVERT. PLACE HUB ENDS OF PIPING UPSTREAM. INSTALL REQUIRED GASKETS ACCORDING TO MANUFACTURER'S WRITTEN INSTRUCTIONS FOR USE OF LUBRICANTS, CEMENTS, AND OTHER INSTALLATION REQUIREMENTS. MAINTAIN SWAB IN PIPING AND PULL PAST EACH JOINT AS COMPLETED.
N. INSTALL SOIL AND WASTE DRAINAGE AND VENT PIPING AT THE FOLLOWING MINIMUM SLOPES UNLESS OTHERWISE INDICATED:
1. BUILDING SANITARY DRAIN: 2 PERCENT DO'M\IWARD IN DIRECTION OF FLOW FOR PIPING NPS 3 (ON 80) AND SMALLER; 1 PERCENT DOWNWARD IN DIRECTION OF FLOW FOR PIPING NPS 4 (DN 100) AND LARGER.
2. HORIZONTAL SANITARY DRAINAGE PIPING: 1 PERCENT DOWNWARD IN DIRECTION OF FLOW.
3. VENT PIPING: 1 PERCENT DOWN TOWARD VERTICAL FIXTURE VENT OR TOWARD VENT STACK.
0. INSTALL CAST—IRON SOIL PIPING ACCORDING TO CISPI'S "CAST IRON SOIL PIPE AND FITTINGS HANDBOOK," CHAPTER IV, "INSTALLATION OF CAST IRON SOIL PIPE AND FITTINGS."
1. INSTALL ENCASEMENT ON UNDERGROUND PIPING ACCORDING TO ASTM A 674 OR AWWA C105/A 21.5.
P. DO NOT ENCLOSE, COVER, OR PUT PIPING INTO OPERATION UNTIL IT IS INSPECTED AND APPROVED BY AUTHORITIES HAVING JURISDICTION.
Q. INSTALL SLEEVES FOR PIPING PENETRATIONS OF WALLS, CEILINGS, AND FLOORS.
R. INSTALL ESCUTCHEONS FOR PIPING PENETRATIONS OF WALLS, CEILINGS, AND FLOORS.
S. HANGER AND SUPPORT INSTALLATION COMPLY WITH REQUIREMENTS FOR PIPE HANGER AND SUPPORT DEVICES AND INSTALLATION.
1. INSTALL CARBON—STEEL PIPE HANGERS FOR HORIZONTAL PIPING IN NONCORROSIVE ENVIRONMENTS.
2. INSTALL STAINLESS—STEEL PIPE HANGERS FOR HORIZONTAL PIPING IN CORROSIVE ENVIRONMENTS.
3. INSTALL CARBON—STEEL PIPE SUPPORT CLAMPS FOR VERTICAL PIPING IN NONCORROSIVE ENVIRONMENTS.
4. INSTALL STAINLESS—STEEL PIPE SUPPORT CLAMPS FOR VERTICAL PIPING IN CORROSIVE ENVIRONMENTS.
5. VERTICAL PIPING: MSS TYPE 8 OR TYPE 42, CLAMPS.
6. INSTALL INDIVIDUAL. STRAIGHT, HORIZONTAL PIPING RUNS:
7. 100 FEET (30 M) AND LESS: MSS TYPE 1, ADJUSTABLE, STEEL CLEVIS HANGERS.
8. LONGER THAN 100 FEET {30 M): MSS TYPE 43, ADJUSTABLE ROLLER HANGERS.
9. LONGER THAN 100 FEET (30 M) IF INDICATED: MSS TYPE 49, SPRING CUSHION ROLLS.
10. MULTIPLE, STRAIGHT, HORIZONTAL PIPING RUNS 100 FEET (30 M) OR LONGER: MSS TYPE 44, PIPE ROLLS. SUPPORT PIPE ROLLS ON TRAPEZE.
11. BASE OF VERTICAL PIPING: MSS TYPE 52, SPRING HANGERS.
T. SUPPORT HORIZONTAL PIPING AND TUBING WITHIN 12 INCHES (300 MM) OF EACH FITTING, VALVE, AND COUPLING.
W. INSTALL HANGERS FOR CAST—IRON SOIL PIPING WITH THE FOLLOWING MAXIMUM HORIZONTAL SPACING AND MINIMUM ROD DIAMETERS:
U. SUPPORT VERTICAL PIPING AND TUBING AT BASE AND AT EACH FLOOR.
V. ROD DIAMETER MAY BE REDUCED ONE SIZE FOR DOUBLE—ROD HANGERS, WITH 3/8—INCH (10—MM) MINIMUM RODS.
1. NPS 1—1/2 AND NPS 2 (DN 40 AND DN 50): 60 INCHES (1500 MM) WITH 3/8—INCH (10—MM) ROD.
2. NPS 3 (DN 80): 60 INCHES (1500 MM) WITH 1/2—INCH (13—MM) ROD.
3. NPS 4 AND NPS 5 (DN 100 AND DN 125): 60 INCHES (1500 MM) WITH 5/8—INCH (16—MM) ROD.
4. NPS 6 AND NPS 8 (DN 150 AND DN 200): 60 INCHES (1500 MM) WITH 3/4—INCH (19—MM) ROD.
5. INSTALL SUPPORTS FOR VERTICAL CAST—IRON SOIL PIPING EVERY 15 FEET (4.5 M).

X. DURING INSTALLATION, NOTIFY AUTHORITIES HAVING JURISDICTION AT LEAST 24 HOURS BEFORE INSPECTION MUST BE MADE. PERFORM TESTS SPECIFIED BELOW IN PRESENCE OF AUTHORITIES HAVING JURISDICTION.
ROUGHING—IN INSPECTION: ARRANGE FOR INSPECTION OF PIPING BEFORE CONCEALING OR CLOSING—IN AFTER ROUGHING—IN AND BEFORE SETTING FIXTURES.
FINAL INSPECTION: ARRANGE FOR FINAL INSPECTION BY AUTHORITIES HAVING JURISDICTION TO OBSERVE TESTS SPECIFIED BELOW AND TO ENSURE COMPLIANCE WITH REQUIREMENTS.
Y. REINSPECTION: IF AUTHORITIES HAVING JURISDICTION FIND THAT PIPING WILL NOT PASS TEST OR INSPECTION, MAKE REQUIRED CORRECTIONS AND ARRANGE FOR REINSPECTION.
Z. REPORTS: PREPARE INSPECTION REPORTS AND HAVE THEM SIGNED BY AUTHORITIES HAVING JURISDICTION.

AA. TEST SANITARY DRAINAGE AND VENT PIPING ACCORDING TO PROCEDURES OF AUTI—IORITIES HAVING JURISDICTION OR, IN ABSENCE OF PUBLISHED PROCEDURES, AS FOLLOWS:
1. TEST FOR LEAKS AND DEFECTS IN NEW PIPING AND PARTS OF EXISTING PIPING THAT HAVE BEEN ALTERED, EXTENDED, OR REPAIRED. IF TESTING IS PERFORMED IN SEGMENTS, SUBMIT SEPARATE REPORT FOR EACH TEST, COMPLETE WITH DIAGRAM OF PORTION OF PIPING TESTED.
2. LEAVE UNCOVERED AND UNCONCEALED NEW, ALTERED, EXTENDED, OR REPLACED DRAINAGE AND VENT PIPING UNTIL IT HAS BEEN TESTED AND APPROVED. EXPOSE WORK THAT WAS COVERED OR CONCEALED BEFORE IT WAS TESTED.
3. ROUGHING—IN PLUMBING TEST PROCEDURE: TEST DRAINAGE AND VENT PIPING EXCEPT OUTSIDE LEADERS ON COMPLETION OF ROUGHING—IN. CLOSE OPENINGS IN PIPING SYSTEM AND FILL WITH WATER TO POINT OF OVERFLOW, BUT NOT LESS THAN 10—FOOT HEAD OF WATER (30 KPA). FROM 15 MINUTES BEFORE INSPECTION STARTS TO COMPLETION OF INSPECTION, WATER LEVEL MUST NOT DROP. INSPECT JOINTS FOR LEAKS.
4. FINISHED PLUMBING TEST PROCEDURE: AFTER PLUMBING FIXTURES HAVE BEEN SET AND TRAPS FILLED WITH WATER, TEST CONNECTIONS AND PROVE THEY ARE GASTIGHT AND WATERTIGHT. PLUG VENT—STACK OPENINGS ON ROOF AND BUILDING DRAINS WHERE THEY LEAVE BUILDING. INTRODUCE AIR INTO PIPING SYSTEM EQUAL TO PRESSURE OF 1—INCH WG (250 PA). USE U—TUBE OR MANOMETER INSERTED IN TRAP OF WATER CLOSET TO MEASURE THIS PRESSURE. AIR PRESSURE MUST REMAIN CONSTANT WITHOUT INTRODUCING ADDITIONAL AIR THROUGHOUT PERIOD OF INSPECTION. INSPECT PLUMBING FIXTURE CONNECTIONS FOR GAS AND WATER LEAKS.
5. REPAIR LEAKS AND DEFECTS WITH NEW MATERIALS AND RETEST PIPING, OR PORTION THEREOF, UNTIL SATISFACTORY RESULTS ARE OBTAINED.

AB. CAP AND SUBJECT PIPING TO STATIC—WATER PRESSURE OF 50 PSIG (345 KPA) ABOVE OPERATING PRESSURE, WITHOUT EXCEEDING PRESSURE RATING OF PIPING SYSTEM MATERIALS. ISOLATE TEST SOURCE AND ALLOW TO STAND FOR FOUR HOURS, LEAKS AND LOSS IN TEST PRESSURE CONSTITUTE DEFECTS THAT MUST BE REPAIRED.
AC. REPAIR LEAKS AND DEFECTS V!TH NEW MATERIALS AND RETEST PIPING, OR PORTION THEREOF, UNTIL SATISFACTORY RESULTS ARE OBTAINED.
AD. PREPARE REPORTS FOR TESTS AND REQUIRED CORRECTIVE ACTION.

AE. CLEANING AND PROTECTION, CLEAN INTERIOR OF PIPING. REMOVE DIRT AND DEBRIS AS WORK PROGRESSES, PROTECT DRAINS DURING REMAINDER OF CONSTRUCTION PERIOD TO AVOID CLOGGING WITH DIRT AND DEBRIS AND TO PREVENT DAMAGE FROM TRAFFIC AND CONSTRUCTION WORK. PLACE PLUGS IN ENDS OF UNCOMPLETED PIPING AT END OF DAY AND WHEN WORK STOPS.

AF. ABOVEGROUND, SOIL AND WASTE PIPING 6" AND SMALLER SHALL BE ANY OF THE FOLLOWING:
1. SERVICE CLASS, CAST—IRON SOIL PIPE AND FITTINGS; GASKETS; AND GASKETS JOINTS.
2. HUBLESS, CAST—IRON SOIL PIPE AND FITTINGS HEAVY—DUTY HUBLESS—PIPING COUPLINGS; AND COUPLED JOINTS.

AI. ABOVEGROUND, SOIL AND WASTE PIPING 8" AND LARGER SHALL BE ANY OF THE FOLLOWING:
1.SERVICE WEIGHT(SV) HUB AND SPIGOT CAST IRON SOIL PIPE FITTINGS

AJ. ABOVEGROUND, VENT PIPING 6" AND SMALLER SHALL BE ANY OF THE FOLLOWING:
1.HUBLESS, CAST—IRON SOIL PIPE AND FITTINGS; CISPI HUBLESS—PIPING COUPLINGS; AND COUPLED JOINTS.

AK. ABOVEGROUND, VENT PIPING 8" AND LARGER SHALL BE ANY OF THE FOLLOWING:
1.SERV1CE CLASS, CAST—IRON SOIL PIPE AND FITTINGS; GASKETS; AND GASKETS JOINTS.

AL. UNDERGROUND, SOIL, WASTE, AND VENT PIPING 15" AND SMALLER SHALL BE ANY OF THE FOLLOWING:
1. SERVICE CLASS, CAST—IRON SOIL PIPE AND FITTINGS; GASKETS; AND GASKETS JOINTS

CLEANOUTS

A. EXPOSED METAL CLEANOUTS:
MANUFACTURERS: SUBJECT TO COMPLIANCE WITH REQUIREMENTS, PROVIDE PRODUCTS BY ONE OF THE FOLLOWING:
1. JOSAM COMPANY; JOSAM DIV.
2. MIFAB, INC.
3. SMITH, JAY R. MFG. CO.; DIVISION OF SMITH INDUSTRIES, INC.
4. TYLER PIPE; WADE DIV.
5. ZURN PLUMBING PRODUCTS GROUP; SPECIFICATION DRAINAGE OPERATION.
STANDARD: ASME A112.36.2M FOR CAST IRON FOR CLEANOUT TEST TEE.
SIZE: SAME AS CONNECTED DRAINAGE PIPING
BODY MATERIAL: HUB—AND—SPIGOT, CAST—IRON SOIL PIPE T—BRANCH AS REQUIRED TO MATCH CONNECTED PIPING.
CLOSURE: COUNTERSUNK PLUG.
CLOSURE PLUG SIZE: SAME AS OR NOT MORE THAN ONE SIZE SMALLER THAN CLEANOUT SIZE.
CLOSURE: STAINLESS—STEEL PLUG WITH SEAL.

B. METAL FLOOR CLEANOUTS:
MANUFACTURERS: SUBJECT TO COMPLIANCE WITH REQUIREMENTS, PROVIDE PRODUCTS BY ONE OF THE FOLLOWING:
1. JOSAM COMPANY; JOSAM DIV.
2. SMITH, JAY R. MFG. CO.; DIVISION OF SMITH INDUSTRIES, INC.
3. TYLER PIPE; WADE DIV.
4. A. MIFAB, INC.
STANDARD: ASME A112.36.2M FOR THREADED, ADJUSTABLE HOUSING CLEANOUT.
SIZE: SAME AS CONNECTED BRANCH.
TYPE: ADJUSTABLE HOUSING THREADED, ADJUSTABLE HOUSING.
BODY OR FERRULE: CAST IRON.
CLAMPING DEVICE: NOT REQUIRED.
OUTLET CONNECTION: THREADED.
CLOSURE: BRASS PLUG WITH STRAIGHT THREADS AND GASKET.
ADJUSTABLE HOUSING MATERIAL: CAST IRON WITH SET—SCREWS OR OTHER DEVICE.
FRAME AND COVER MATERIAL AND FINISH: ROUGH BRONZE.
FRAME AND COVER SHAPE: ROUND.
TOP LOADING CLASSIFICATION: LIGHT DUTY.
RISER: ASTM A 74, SERVICE CLASS, CAST—IRON DRAINAGE PIPE FITTING AND RISER TO CLEAN OUT.
STANDARD: ASME A112.3.1.
SIZE: SAME AS CONNECTED BRANCH.
HOUSING: STAINLESS STEEL.
CLOSURE: STAINLESS STEEL WITH SEAL.
RISER: STAINLESS—STEEL DRAINAGE PIPE FITTING TO CLEANOUT.

C. CAST—IRON WALL CLEANOUTS:
MANUFACTURERS: SUBJECT TO COMPLIANCE WITH REQUIREMENTS, PROVIDE PRODUCTS BY ONE OF THE FOLLOWING:
1. JOSAM COMPANY; JOSAM DIV.
2. MIFAB, INC.
3. SMITH, JAY R. MFG. CO.; DIVISION OF SMITH INDUSTRIES, INC.
4. TYLER PIPE; WADE DIV.
5. ZURN PLUMBING PRODUCTS GROUP; SPECIFICATION DRAINAGE OPERATION.
STANDARD: ASME A112.36.2M. INCLUDE WALL ACCESS.
SIZE: SAME AS CONNECTED DRAINAGE PIPING.
BODY: HUB—AND—SPIGOT, CAST—IRON SOIL PIPE T—BRANCH AS REQUIRED TO MATCH CONNECTED PIPING.
CLOSURE: COUNTERSUNK OR RAISED—HEAD, BRASS PLUG.
CLOSURE PLUG SIZE: SAME AS OR NOT MORE THAN ONE SIZE SMALLER THAN CLEANOUT SIZE.
WALL ACCESS: ROUND, STAINLESS—STEEL COVER PLATE WITH SCREW.
WALL ACCESS: ROUND, STAINLESS—STEEL WALL—INSTALLATION FRAME AND COVER.

D. INSTALL CLEANOUTS IN ABOVEGROUND PIPING AND BUILDING DRAIN PIPING ACCORDING TO THE FOLLOWING, UNLESS OTHERWISE INDICATED:
1. SIZE SAME AS DRAINAGE PIPING UP TO NPS 4 (DN 100). USE NPS 4 (DN 100) FOR LARGER DRAINAGE PIPING UNLESS LARGER CLEANOUT IS INDICATED.
2. LOCATE AT EACH CHANGE IN DIRECTION OF PIPING GREATER THAN 45 DEGREES.
3. LOCATE AT MINIMUM INTERVALS OF 50 FEET (15 M) FOR PIPING NPS 4 (DN 100) AND SMALLER AND 100 FEET (30 M) FOR LARGER PIPING.
4. LOCATE AT BASE OF EACH VERTICAL SOIL AND WASTE STACK.
E. FOR FLOOR CLEANOUTS FOR PIPING BELOW FLOORS, INSTALL CLEANOUT DECK PLATES WITH TOP FLUSH WITH FINISHED FLOOR.
F. FOR CLEANOUTS LOCATED IN CONCEALED PIPING, INSTALL CLEANOUT WALL ACCESS COVERS, OF TYPES INDICATED, WITH FRAME AND COVER FLUSH WITH FINISHED WALL
G. INSTALL FLOOR DRAINS AT LOW POINTS OF SURFACE AREAS TO BE DRAINED. SET GRATES OF DRAINS FLUSH WITH FINISHED FLOOR, UNLESS OTHERWISE INDICATED.
H. INSTALL ROOF FLASHING ASSEMBLIES ON SANITARY STACK VENTS AND VENT STACKS THAT EXTEND THROUGH ROOF.
I. ASSEMBLE OPEN DRAIN FITTINGS AND INSTALL WITH TOP OF HUB 2 INCHES (51 MM) ABOVE FLOOR.
J. INSTALL DEEP—SEAL TRAPS ON FLOOR DRAINS AND OTHER WASTE OUTLETS, IF INDICATED.
K. INSTALL FLOOR—DRAIN, TRAP—SEAL PRIMER FITTINGS ON INLET TO FLOOR DRAINS THAT REQUIRE TRAP—SEAL PRIMER CONNECTION.
1. EXCEPTION: FITTING MAY BE OMITTED IF TRAP HAS TRAP—SEAL PRIMER CONNECTION.
2. SIZE: SAME AS FLOOR DRAIN INLET.
L. INSTALL AIR—GAP FITTINGS ON DRAINING—TYPE BACKFLOW PREVENTERS AND ON INDIRECT—WASTE PIPING DISCHARGE INTO SANITARY DRAINAGE SYSTEM.

PLUMBING FIXTURES

A. ASSEMBLE PLUMBING FIXTURES, TRIM, FITTINGS, AND OTHER COMPONENTS ACCORDING TO MANUFACTURERS' WRITTEN INSTRUCTIONS.
1. INSTALL OFF—FLOOR SUPPORTS, AFFIXED TO BUILDING SUBSTRATE, FOR WALL—MOUNTING FIXTURES.
2. USE CARRIER SUPPORTS WITH WASTE FITTING AND SEAL FOR BACK—OUTLET FIXTURES.
3. USE CARRIER SUPPORTS WITHOUT WASTE FITTING FOR FIXTURES WITH TUBULAR WASTE PIPING.
B. USE CHAIR— TYPE CARRIER SUPPORTS WITH RECTANGULAR STEEL UPRIGHTS FOR ACCESSIBLE FIXTURES.
C. INSTALL BACK—OUTLET, WALL—MOUNTING FIXTURES ONTO WASTE FITTING SEALS AND ATTACH TO SUPPORTS.
D. INSTALL FLOOR—MOUNTING FIXTURES ON CLOSET FLANGES OR OTHER ATTACHMENTS TO PIPING OR BUILDING SUBSTRATE.
E. INSTALL WALL—MOUNTING FIXTURES WITH TUBULAR WASTE PIPING ATTACHED TO SUPPORTS.
F. INSTALL FLOOR—MOUNTING, BACK—OUTLET WATER CLOSETS ATTACHED TO BUILDING FLOOR SUBSTRATE AND WALL BRACKET AND ONTO WASTE FITTING SEALS.
G. INSTALL COUNTER—MOUNTING FIXTURES IN AND ATTACHED TO CASEWORK.
H. INSTALL FIXTURES LEVEL AND PLUMB ACCORDING TO ROUGHING—IN DRAWINGS.
I. INSTALL WATER—SUPPLY PIPING WITH STOP ON EACH SUPPLY TO EACH FIXTURE TO BE CONNECTED TO WATER DISTRIBUTION PIPING. ATTACH SUPPLIES TO SUPPORTS TO SUBSTRATE WITHIN PIPE SPACES BEHIND FIXTURES. INSTALL STOPS IN LOCATIONS WHERE THEY CAN BE EASILY REACHED FOR OPERATION.
J. EXCEPTION: USE BALL VALVES IF SUPPLY STOPS ARE NOT SPECIFIED WITH FIXTURE.
K. INSTALL TRAP AND TUBULAR WASTE PIPING ON DRAIN OUTLET OF EACH FIXTURE TO BE DIRECTLY CONNECTED TO SANITARY DRAINAGE SYSTEM.
L. INSTALL TUBULAR WASTE PIPING ON DRAIN OUTLET OF EACH FIXTURE TO BE INDIRECTLY CONNECTED TO DRAINAGE SYSTEM.
M. INSTALL FLUSHOMETER VALVES FOR ACCESSIBLE WATER CLOSETS AND URINALS WITH HANDLE MOUNTED ON WIDE SIDE OF COMPARTMENT. INSTALL OTHER ACTUATORS IN LOCATIONS THAT ARE EASY FOR PEOPLE WITH DISABILITIES TO REACH.
N. INSTALL TANKS FOR ACCESSIBLE, TANK—TYPE WATER CLOSETS WITH LEVER HANDLE MOUNTED ON WIDE SIDE OF COMPARTMENT.
O. INSTALL OPEN FRONT TOILET SEATS ON WATER CLOSETS.
P. INSTALL WATER—SUPPLY FLOW—CONTROL FITTINGS WITH SPECIFIED FLOW RATES IN FIXTURE SUPPLIES AT STOP VALVES.
Q. INSTALL FAUCET FLOW—CONTROL FITTINGS WITH SPECIFIED FLOW RATES AND PATTERNS IN FAUCET SPOUTS IF FAUCETS ARE NOT AVAILABLE WITH REQUIRED RATES AND PATTERNS. INCLUDE ADAPTERS IF REQUIRED.
R. INSTALL SHOWER FLOW—CONTROL FITTINGS WITH SPECIFIED MAXIMUM FLOW RATES IN SHOWER ARMS,
S. INSTALL TRAPS ON FIXTURE OUTLETS.
1. EXCEPTION: OMIT TRAP ON FIXTURES WITH INTEGRAL TRAPS.
2. EXCEPTION: OMIT TRAP ON INDIRECT WASTES, UNLESS OTHERWISE INDICATED.
U. INSTALL ESCUTCHEONS AT PIPING WALL CEILING PENETRATIONS IN EXPOSED, FINISHED LOCATIONS AND WITHIN CABINETS AND MILLWORK. USE OEEP—PATTERN ESCUTCHEONS IF REQUIRED TO CONCEAL PROTRUDING FITTINGS.
V. SEAL JOINTS BETWEEN FIXTURES AND WALLS, FLOORS, AND COUNTERTOPS USING SANITARY—TYPE, ONE—PART, MILDEW—RESISTANT SILICONE SEALANT. MATCH SEALANT COLOR TO FIXTURE COLOR.
W. VERIFY THAT INSTALLED PLUMBING FIXTURES ARE CATEGORIES AND TYPES SPECIFIED FOR LOCATIONS WHERE INSTALLED.
X. CHECK THAT PLUMBING FIXTURES ARE COMPLETE WITH TRIM, FAUCETS, FITTINGS, AND OTHER SPECIFIED COMPONENTS.
Y. INSPECT INSTALLED PLUMBING FIXTURES FOR DAMAGE. REPLACE DAMAGED FIXTURES AND COMPONENTS.
Z. TEST INSTALLED FIXTURES AFTER WATER SYSTEMS ARE PRESSURIZED FOR PROPER OPERATION. REPLACE MALFUNCTIONING FIXTURES AND COMPONENTS, THEN RETEST. REPEAT PROCEDURE UNTIL UNITS OPERATE PROPERLY.
AA. INSTALL FRESH BATTERIES IN SENSOR—OPERATED MECHANISMS.
AB. CLEAN FIXTURES, FAUCETS, AND OTHER FITTINGS WITH MANUFACTURERS' RECOMMENDED CLEANING METHODS AND MATERIALS. DO THE FOLLOWING:
1. REMOVE FAUCET SPOUTS AND STRAINERS, REMOVE SEDIMENT AND DEBRIS, AND REINSTALL STRAINERS AND SPOUTS.
2. REMOVE SEDIMENT AND DEBRIS FROM DRAINS.
AC. AFTER COMPLETING INSTALLATION OF EXPOSED, FACTORY—FINISHED FIXTURES, FAUCETS, AND FITTINGS, INSPECT EXPOSED FINISHES AND REPAIR DAMAGED FINISHES.

PLUMBING PIPING INSULATION

A. INSULATION MATERIALS
PRODUCTS SHALL NOT CONTAIN ASBESTOS, LEAD, MERCURY, OR MERCURY COMPOUNDS. PRODUCTS THAT COME IN CONTACT WITH STAINLESS STEEL SHALL HAVE A LEACHABLE CHLORIDE CONTENT OF LESS THAN 50 PPM WHEN TESTED ACCORDING TO ASTM C 871.

B. FOAM INSULATION MATERIALS SHALL NOT USE CFC OR HCFC BLOWING AGENTS IN THE MANUFACTURING PROCESS.

C. MINERAL—FIBER, PREFORMED PIPE INSULATION:
PRODUCTS: SUB.ECT TO COMPLIANCE WIn—1 REQUIREMENTS, PROI;IDE TI—IE FOLLOWING] [PROVIDE ONE OF THE FOLLOWING:
1. CERTAIN TEED, CO.
2. JOHNS MANVILLE; MICRO—LOK.
3. KNAUF INSULATION; 1000—DEGREE PIPE INSULATION.
4. MANSON INSULATION INC.; ALLEY—K.
5. OWENS CORNING; FIBERGLAS PIPE INSULATION.
TYPE I, 850 DEG F (454 DEG C) MATERIALS' MINERAL OR GLASS FIBERS BONDED WITH A THERMOSETTING RESIN. COMPLY WITH ASTM C 547, TYPE I, GRADE A, WITH FACTORY—APPLIED ASJ—SSL. FACTORY—APPLIED JACKET REQUIREMENTS ARE SPECIFIED IN "FACTORY—APPLIED JACKETS" ARTICLE.
D. MINERAL—FIBER INSULATING CEMENT: COMPLY WITH ASTM C 195.
PRODUCTS: SUBJECT TO COMPLIANCE WITH REQUIREMENTS, PROVIDE THE FOLLOWING:
1. RAMCO INSULATION, INC.; SUPER—STIK.

E. MINERAL—FIBER, HYDRAULIC—SETTING INSULATING AND FINISHING CEMENT: COMPLY WITH ASTM C 449.
PRODUCTS: SUBJECT TO COMPLIANCE WITH REQUIREMENTS, PROVIDE THE FOLLOWING:
1. RAMCO INSULATION, INC.; RAMCOTE 1200 AND QUIK—COTE.
F. ADHESIVES
MATERIALS SHALL BE COMPATIBLE I'!TH INSULATION MATERIALS, JACKETS, AND SUBSTRATES AND FOR BONDING INSULATION TO ITSELF AND TO SURFACES TO BE INSULATED, UNLESS OTHERWISE INDICATED.
MINERAL—FIBER ADHESIVE: COMPLY WITH MIL—A—3316C, CLASS 2, GRADE A.
PRODUCTS: SUBJECT TO COMPLIANCE WITH REQUIREMENTS, PROVIDE ONE OF THE FOLLOWING:
1. CHILDERS BRAND, SPECIALTY CONSTRUCTION BRANDS, INC., A BUSINESS OF H. B. FULLER COMPANY; CP—127.
2. EAGLE BRIDGES — MARATHON INDUSTRIES; 225.
3. FOSTER BRAND, SPECIALTY CONSTRUCTION BRANDS, INC., A BUSINESS OF H. B. FULLER COMPANY; 85—60/85—70.
4. MON—ECO INDUSTRIES, INC.; 22—25.
FOR INDOOR APPLICATIONS, USE ADHESIVE THAT HAS A VOC CONTENT OF 80 G/L OR LESS WHEN CALCULATED ACCORDING TO 40 CFR 59, SUBPART D (EPA METHOD 24).

G. ASJ ADHESIVE, AND FSK JACKET ADHESIVE: COMPLY WITH MIL—A—3316C, CLASS 2, GRADE A FOR BONDING INSULATION JACKET LAP SEAMS AND JOINTS.
PRODUCTS: SUBJECT TO COMPLIANCE WITH REQUIREMENTS, PROVIDE ONE OF THE FDLLOI'!NG:
1. CHILDERS BRAND, SPECIALTY CONSTRUCTION BRANDS, INC., A BUSINES

GALVESTON COUNTY
BEACH PAVILION
CRYSTAL BEACH, TX 77650
BE—Arc LLC Project No : C—13—007.01

ibis Engineering
REG # F—11156
P.O. Box 55171
Galveston, Texas 77555
PH 409.621.6740
THIS PRINT IS THE PROPERTY OF IBIS ENGINEERING IT MUST NOT BE TRACED OR REPRODUCED IN ANY MANNER NOR SHALL IT BE SUBMITTED WITHOUT PRIOR WRITTEN CONSENT FROM IBIS ENGINEERING.

BRAX EASTERWOOD
DESIGN
2728 AVENUE Q SUITE 2
GALVESTON TEXAS 77550
PHONE 409—354—8976
EASTERWOOD@BEAIA.COM

DESIGN REVIEW

DATE	REVISION

DESIGN DEVELOPMENT

DATE ISSUED:
9/28/2017

COPYRIGHT 2017

COUNTY APPROVAL:
SIGNATURE _____ DATE_____

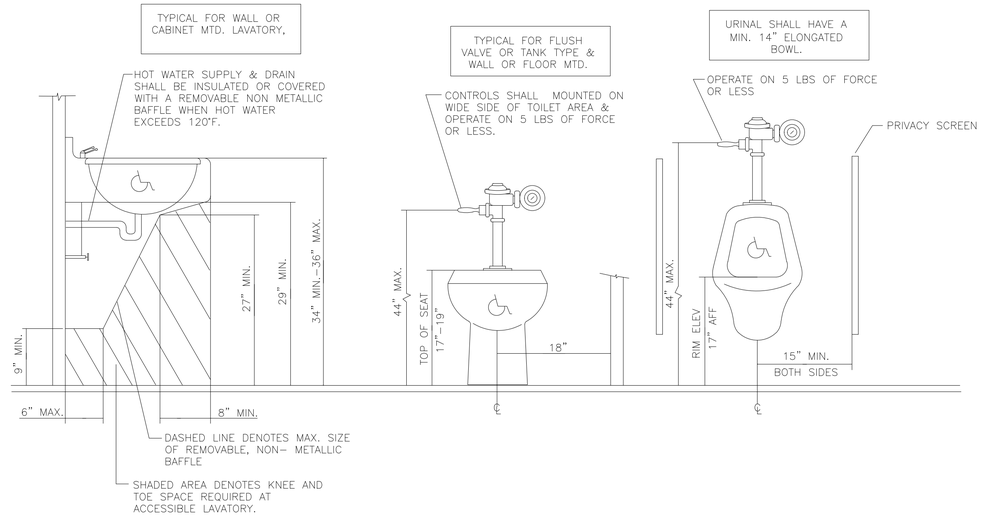

1 P4.0 NOT USED
Scale: N.T.S.

4 P4.0 HANDICAP PLUMBING FIXTURE INSTALLATION
Scale: N.T.S.

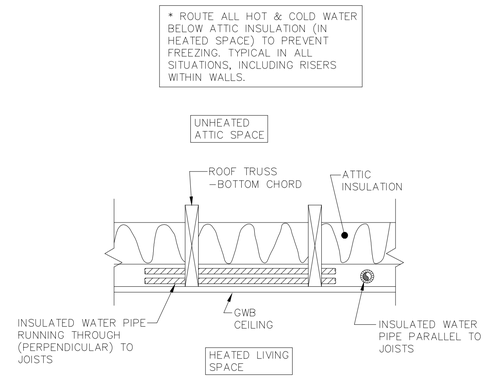

9 P4.0 WATER PIPING ROUTED IN ATTIC DETAIL
Scale: N.T.S.

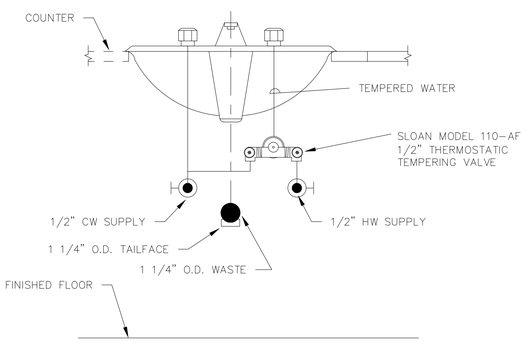

2 P4.0 LOCAL MIXING VALVE DETAIL
Scale: N.T.S.

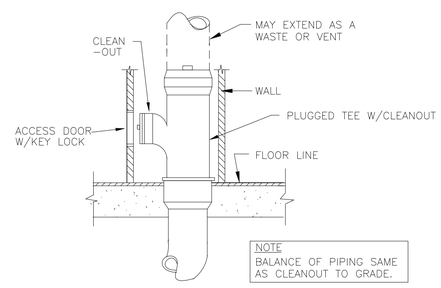

5 P4.0 WALL CLEANOUT DETAIL
Scale: N.T.S.

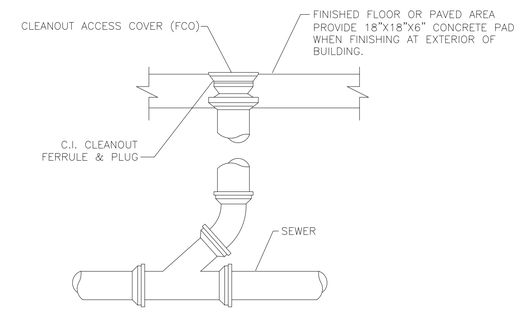

7 P4.0 CLEANOUT DETAIL
Scale: N.T.S.

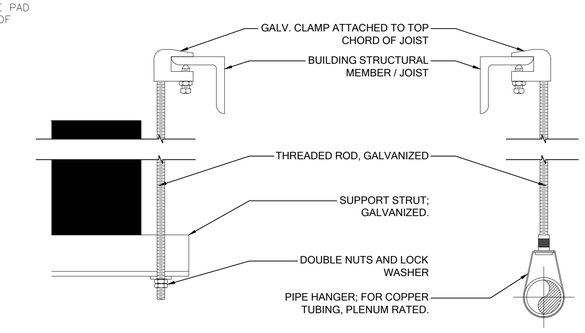

3 PIPE SUPPORT
SCALE: NONE

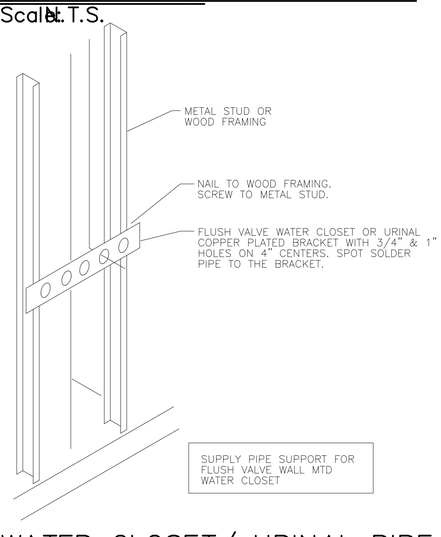

3 P4.0 WATER CLOSET/ URINAL PIPE SUPPORT DETAIL
Scale: N.T.S.

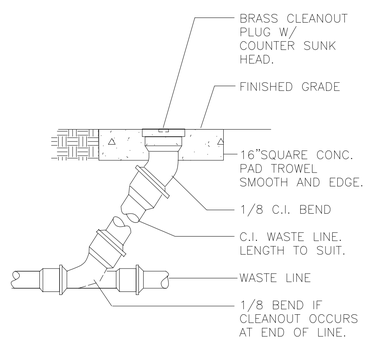

6 P4.0 CLEANOUT TO GRADE
Scale: N.T.S.

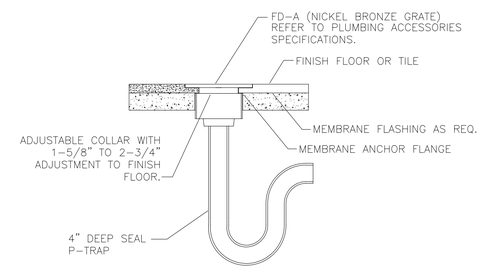

8 P4.0 TOILET AREA FLOOR DRAIN
Scale: N.T.S.

GALVESTON COUNTY
BEACH PAVILION
CRYSTAL BEACH, TX 77650

BE-Arc LLC Project No : C-13-007.01

bis Engineering
REG # F-11156
P.O. Box 357
Galveston, Texas 77555
PH 409.621.5740

THIS PRINT IS THE PROPERTY OF BIS ENGINEERING IT MAY NOT BE TRACED, OR REPRODUCED IN ANY FORM OR MANNER WHATSOEVER, NOR LOANED OUT, OR IT BE SUBMITTED WITHOUT PRIOR WRITTEN CONSENT FROM BIS ENGINEERING.

BRAX EASTERWOOD
DESIGN
2728 AVENUE Q SUITE 2
GALVESTON TEXAS 77550
PHONE 409-354-8976
EASTERWOOD@BEAIA.COM

DESIGN REVIEW

DATE	REVISION

DESIGN DEVELOPMENT

DATE ISSUED:
9/28/2017

COPYRIGHT 2017

P5.0.

COUNTY APPROVAL:
SIGNATURE _____ DATE_____

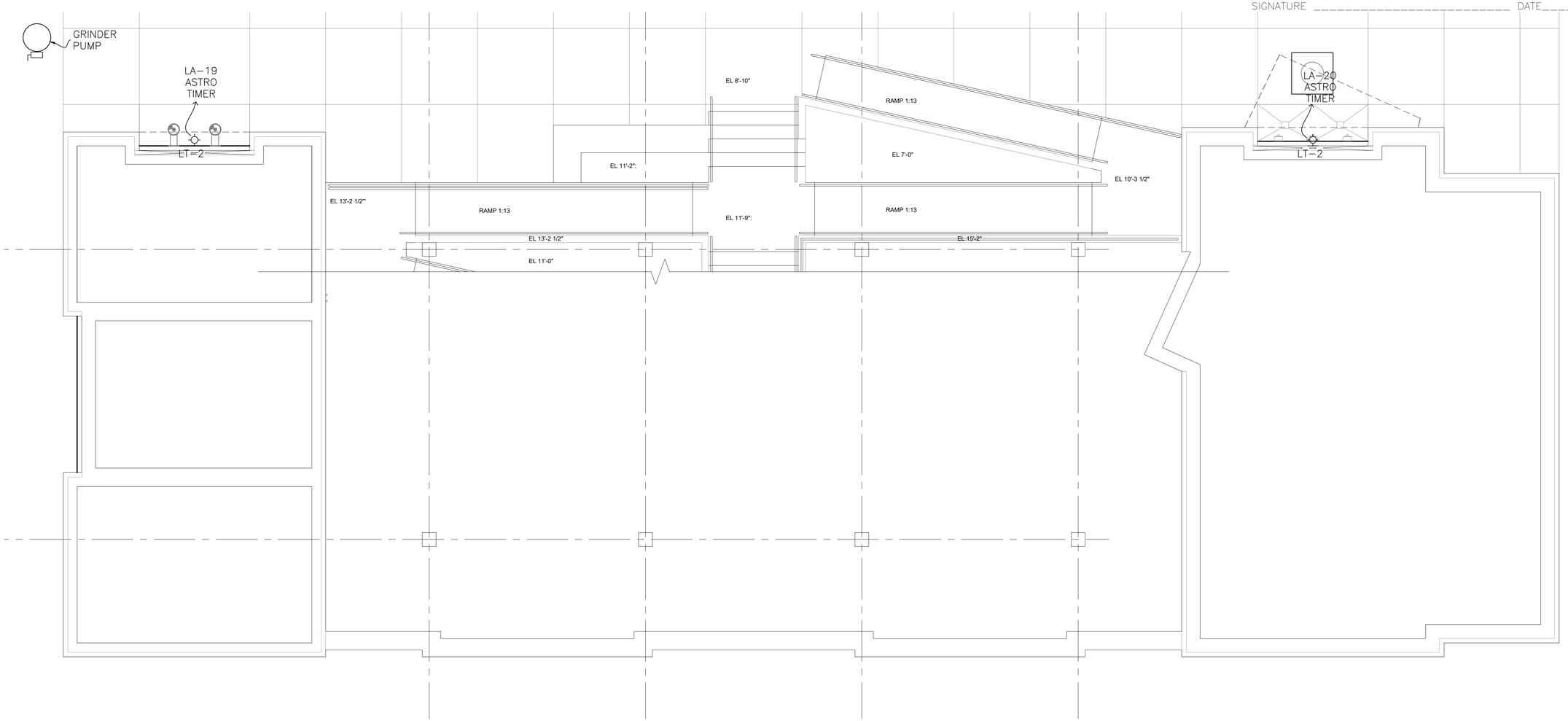

1 LOWER LEVEL
POWER & LIGHTING PLAN
SCALE: 1/4" = 1'-0"

GALVESTON COUNTY BEACH PAVILION CRYSTAL BEACH, TX 77650

BE-Arc LLC Project No : C-13-007.01

bis Engineering
REG # F-11156
P.O. Box 1373
Galveston, TX 77555
PH 409.621.5740

THIS PRINT IS THE PROPERTY OF BIS ENGINEERING IT MAY NOT BE TRACED OR REPRODUCED IN ANY FORM OR MANNER WHATSOEVER NOR LOANED, SHOWN OR OTHERWISE MADE AVAILABLE TO ANYONE WHO MAY NOT BE SUBMITTED WITHOUT PRIOR WRITTEN CONSENT FROM BIS ENGINEERING.

BRAX EASTERWOOD
DESIGN
2728 AVENUE Q SUITE 2
GALVESTON TEXAS 77550
PHONE 409-354-8976
EASTERWOOD@BEAIA.COM

DESIGN REVIEW

DATE	REVISION

DESIGN DEVELOPMENT

DATE ISSUED:
9/28/2017

COPYRIGHT 2017

E1.0

COUNTY APPROVAL:
SIGNATURE _____ DATE_____

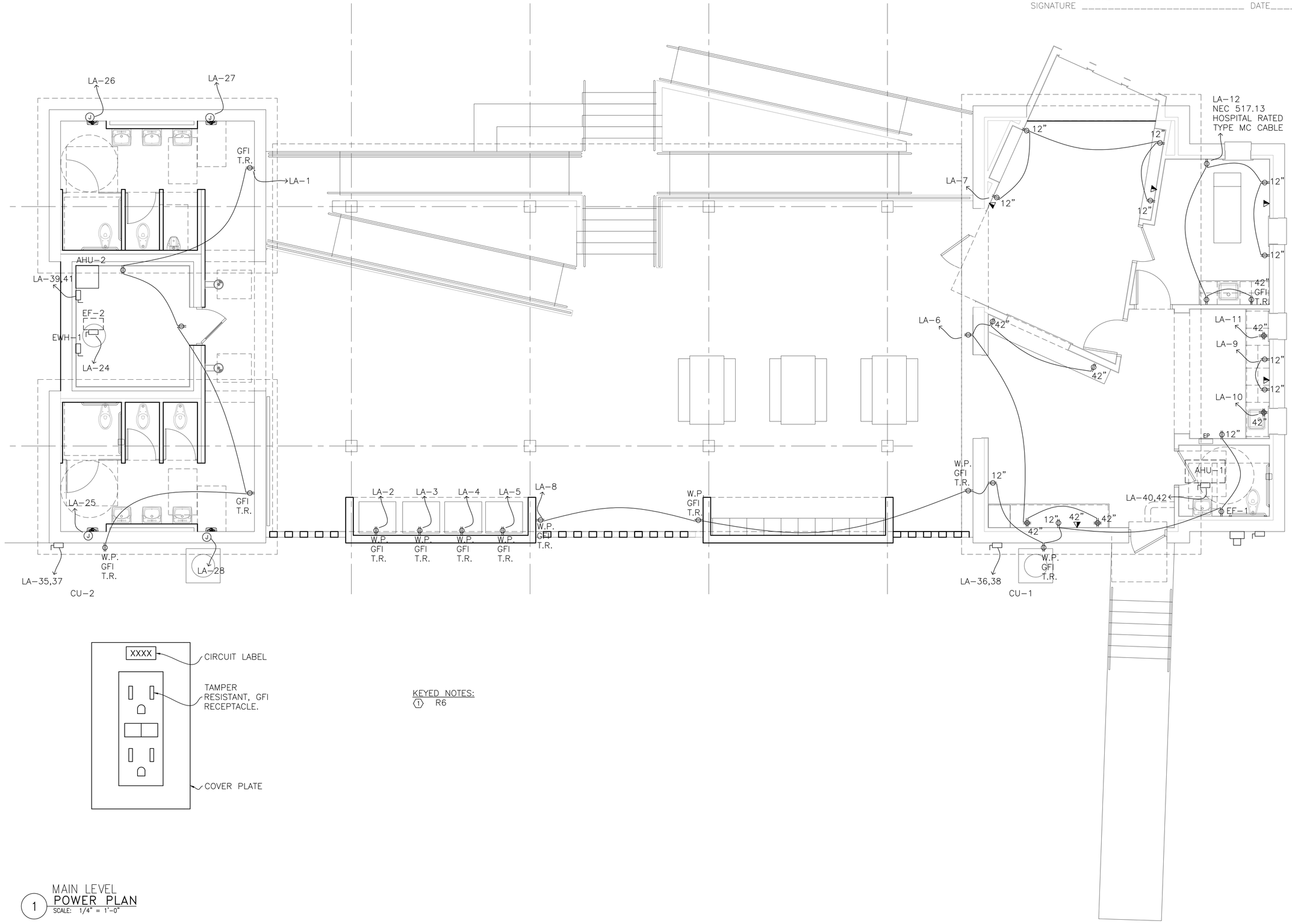

KEYED NOTES:
1 R6

1 MAIN LEVEL POWER PLAN
SCALE: 1/4" = 1'-0"

GALVESTON COUNTY
BEACH PAVILION
CRYSTAL BEACH, TX 77650

BE-Arc LLC Project No : C-13-007.01

bis Engineering
REG # F-11156
P.O. Box 1577
Galveston, TX 77553
PH 409.621.5740
THIS PRINT IS THE PROPERTY OF BIS ENGINEERING IT MAY NOT BE TRACED, OR REPRODUCED, IN WHOLE OR IN PART, OR BE SUBMITTED WITHOUT PRIOR WRITTEN CONSENT FROM BIS ENGINEERING.

BRAX EASTERWOOD
DESIGN
2728 AVENUE Q SUITE 2
GALVESTON TEXAS 77550
PHONE 409-354-8976
EASTERWOOD@BEAIA.COM

DESIGN REVIEW

DATE	REVISION

DESIGN DEVELOPMENT

DATE ISSUED:
9/28/2017

COPYRIGHT 2017

E1.1

COUNTY APPROVAL:
SIGNATURE _____ DATE_____

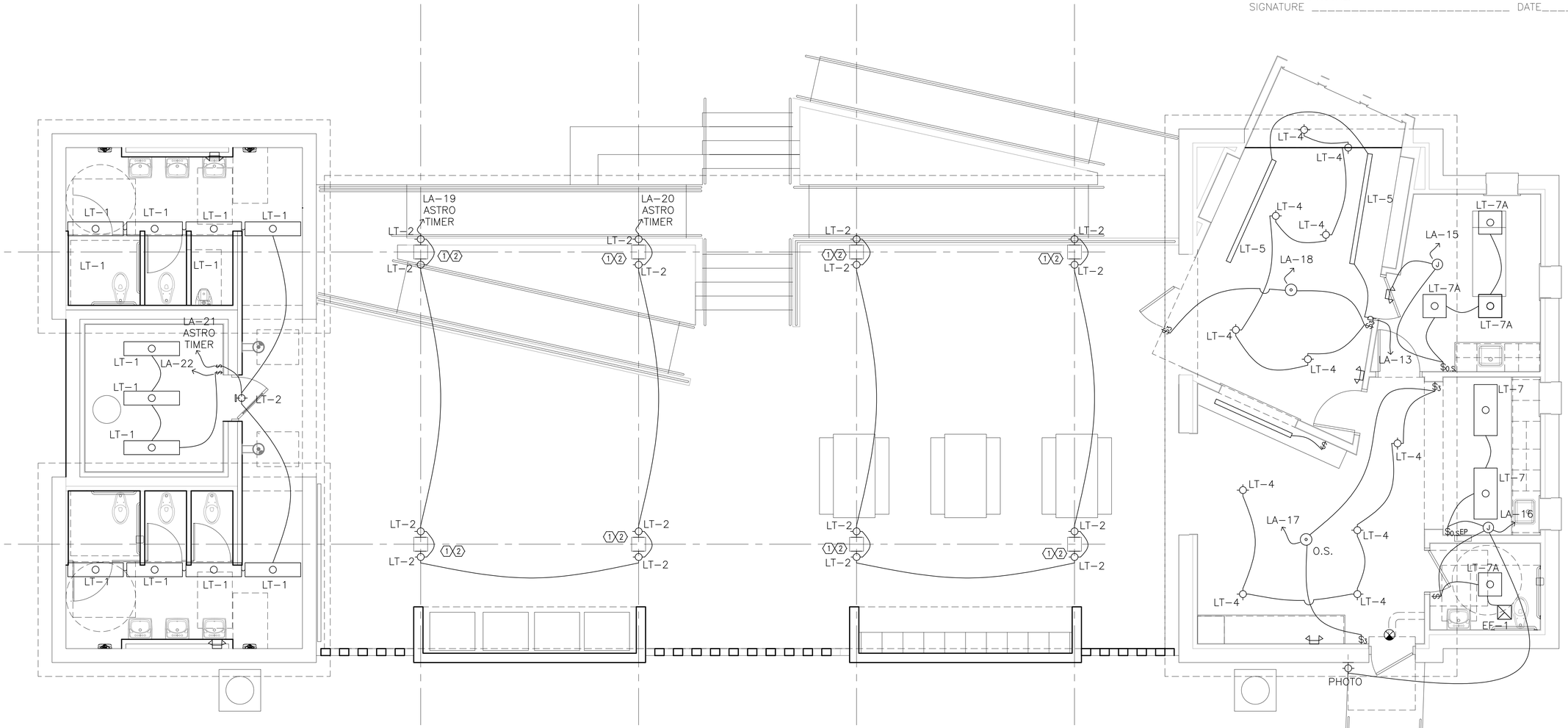

KEYED NOTES:

1. RUN CONDUIT INSIDE OF COLUMN.
2. RECESS J-BOX IN COLUMN.

LIGHTING SCHEDUEL

Item	Location	Description
LT-A	Field	Saturna 5008 LED, Ceiling Mount, Wet Location, AN Finish, 4000K, 120V, Vandal Resistant, STAINLESS STEEL SCREWS
LT-B		Saturna 4002 LED, Pendant Mount, Wet Location, AN Finish, 4000K, 120V, Vandal Resistant, STAINLESS STEEL SCREWS
LT-B1		Saturna 4000 LED, Ceiling Mount, Wet Location, AN Finish, 4000K, 120V, Vandal Resistant, STAINLESS STEEL SCREWS
LT-C	Corners	Ligman Tango UTA 31821,DOWN, 40W, 05 Matt Silver Finish, Medium Beam, 4000K, 120V, Wet Location, Vandal Resistant, Frosted, SS Screws
LT-C1	Coupula Wall	Ligman Tango UTA 31821, UP & DOWN, 40W, 05 Matt Silver Finish, Medium Beam, 4000K, 120V, Wet Location, Vandal Resistant, Frosted, SS Screws. Mount on Coupala Wall, Above Beam
LT-D	Bath	Eaton Vandal Resistant Quad Tube Sconse, 18W, 120V, Gray (AP), QD DW PP 18 A 120 RP LL
LT-E	Sconse	Saturna 5008, Hooded, LED, Wet Location, 4000K, 120V, AN Finish, Vandal Resistant, STAINLESS STEEL SCREWS, Wall Mounted.
LT-F		Kichler 15764 Half Moon, Bronzed Brass, Low Voltage LED, 2700K, 1.86 VA, STAINLESS STEEL Mounting Hardware. Nema 4x transformer enclosure.
P	Pole Lts	See Sheet E2.1

1 MAIN LEVEL
LIGHTING PLAN
SCALE: 1/4" = 1'-0"

GALVESTON COUNTY
BEACH PAVILION
CRYSTAL BEACH, TX 77650

BE-Arc LLC Project No : C-13-007.01

bis Engineering
REG # F-11156
P.O. Box 1375
Galveston, TX 77553
PH 409.621.5740

THIS PRINT IS THE PROPERTY OF BIS ENGINEERING IT MAY NOT BE TRACED, OR REPRODUCED IN WHOLE OR IN PART, OR ISSUED TO ANY OTHER PARTY IF IT IS SUBMITTED WITHOUT PRIOR WRITTEN CONSENT FROM BIS ENGINEERING.

BRAX EASTERWOOD
DESIGN
2728 AVENUE Q SUITE 2
GALVESTON TEXAS 77550
PHONE 409-354-8976
EASTERWOOD@BEAIA.COM

DESIGN REVIEW

DATE	REVISION

DESIGN DEVELOPMENT

DATE ISSUED:
9/28/2017

COPYRIGHT 2017

E1.2

COUNTY APPROVAL:
SIGNATURE _____ DATE_____

Panel Schedule
LA

Source Information:
Size:
Impedance:
Xfmr AIC:
Voltage Pri:
Voltage Sec: 240 / 120 V
Phase: 1

Enclosure Information:
NEMA: Type 1
Main Connection: breaker
Ground Buss: Yes
Neutral Buss: Yes
CT Meter: No
Entrance: Bottom

Circuit Information:
Circuits: 42 / 42
Voltage: 120 / 240
System: 1Ø,
Hertz: 60

Protection Information:
Frame Size: 200A
Load (A): 122
% Factor: 160
OCPD Size: 200A

Conductor Information:
Conductor: 2-4/0 ga.
Neutral: 1-4/0 ga.
Ground: 1-6 ga.
Insulation: THHN
Material: Copper
Raceway: PVC-40

					Load - kVA			Load - kVA								
Ct#	Load Description	Rway Size	Cdtr Size	OCPD Size	AØ	BØ	CØ	L	CØ	BØ	AØ	OCPD Size	Cdtr Size	Rway Size	Load Description	Ct#
1	RCPT		(1) 12 ga.	20A /1	0.72			L1			0.72	20A /1	(1) 12 ga.		RCPT	2
3	GRINDER		(2) 12 ga.	20A /2				L2		0.72		20A /1	(1) 12 ga.		RCPT	4
5	---							L1			0.9	20A /1	(1) 12 ga.		RCPT	6
7	RCPT		(1) 12 ga.	20A /1		0.72		L2		1.44		20A /1	(1) 12 ga.		RCPT	8
9	RCPT		(1) 12 ga.	20A /1	0.36			L1			0.36	20A /1	(1) 12 ga.		RCPT	10
11	RCPT TIMERS		(1) 12 ga.	20A /1		0.36		L2		0.9		20A /1	(1) 12 ga.		MEDICAL RCPT	12
13	TRACK LTS		(1) 12 ga.	20A /1	1.8			L1			0.18	20A /1	(1) 12 ga.		SPARE	14
15	MEDICAL LTS		(1) 12 ga.	20A /1		0.88		L2		0.88		20A /1	(1) 12 ga.		LTS	16
17	LTS		(1) 12 ga.	20A /1	0.88			L1			0.88	20A /1	(1) 12 ga.		LTS	18
19	LTS		(1) 12 ga.	20A /1		0.88		L2		0.88		20A /1	(1) 12 ga.		LTS	20
21	LTS		(1) 12 ga.	20A /1	0.88			L1			0.88	20A /1	(1) 12 ga.		LTS	22
23	EMERGENCY LTS (NON MEDICAL)		(1) 12 ga.	20A /1		0.88		L2				20A /1	(1) 12 ga.		EF-2	24
25	HAND DRYER		(1) 12 ga.	20A /1	1.2			L1			1.2	20A /1	(1) 12 ga.		HAND DRYER	26
27	HAND DRYER		(1) 12 ga.	20A /1		1.2		L2		1.2		20A /1	(1) 12 ga.		HAND DRYER	28
29	RCPT		(1) 12 ga.	20A /1	0.36			L1			1.2	20A /1	(1) 12 ga.		IHW KITCHEN	30
31	EHW-1		(2) 12 ga.	20A /2		1.25		L2		1.2		20A /1	(1) 12 ga.		IHW BATH	32
33	---				1.25			L1			1.2	20A /1	(1) 12 ga.		MEDICAL IHW SINK	34
35	CU-2		(2) 12 ga.	20A /2		1.6		L2		3.2		35A /2	(2) 8 ga.		CU-1	36
37	---				1.6			L1			3.2				---	38
39	AHU-2		(2) 10 ga.	30A /2				L2				45A /2	(2) 8 ga.		AHU-1	40
41	---							L1							---	42
	Phase Totals - kVA:				9.05	7.77				10.42	10.72					

Load Balance:

PhaseA:	PhaseB:
19.77 kVA	18.19 kVA

Phase Balance Differential: 9.25%

Load Totals:

	Amps:	kW:	kVA:
Connected Load:	166.29	33.40	37.91
w/ Demand Factors:	121.63	23.49	26.69

LA — Load Summary

Service Characterization :
Computation Method : Office / Per Maximum Phase Load Method
NEC Table : 310.16
OCPD Size : Std-200A-2P-240VAC — 1 Phase
OCPD Increase Factor : 160%
L-L Voltage : 240 VAC — L-N Voltage : 120 VAC
Current-Carrying Conductors : 2 - 4/0 ga. THHN Copper conductors
Ground Conductors : 1 - 6 ga. THHN Copper conductor
Neutral Conductors : 1 - 4/0 ga. THHN Copper conductor

Service Load Characteristics :

Gross Amperes :	121.63 (A)
Gross Kilowatts :	23.49 (kW)
Gross Volt Amperes :	26,692 (VA)
Gross Kilovolt Amperes :	26.69 (kVA)

Phase Load Balance :
Phase A : 17.51 kW
Phase B : 15.89 kW
Balance Differential Percentage : 9.25%

OCPD Summary : **Service Size Computation Method : Office**

	Line	Neutral	Notes
General Lighting Load :			
Inductive Lighting Load :	1,800.00 VA	1,800.00 VA	1 - circuit(s)
Total Load :	1,800.00 VA	1,800.00 VA	
Total Load with Demand Factor:	**1,800.00 VA**	**1,800.00 VA**	per NEC 220.42, 220.52(A) & (B)
Receptacle Load :			
Continuous Load :	15,615.00 VA	15,615.00 VA	21 - circuit(s)
Total Load :	15,615.00 VA	15,615.00 VA	
Total Load with Demand Factor:	**12,807.00 VA**	**12,807.00 VA**	per NEC 220.44
Motor Load :			
Motor Load :	3.25 VA	3.25 VA	2 - circuit(s)
25% of Largest Motor* :	1,598.57 VA	1,598.57 VA	per NEC 220.18(A)
Total Load :	**1,601.82 VA**	**1,601.82 VA**	
Environmental Load :			
Heater Load :	10,900.00 VA	10,900.00 VA	8 - circuit(s)
A/C Load :	9,591.43 VA	9,591.43 VA	2 - circuit(s)
Applied Load:	**10,900.00 VA**	**10,900.00 VA**	NEC 220.60
	27,109.00 VA	**27,109.00 VA**	
Totals :	**122.00 A**	**122.00 A**	

* Largest motor load is derived from CU-1

Items not included in panel load summary computations :
1. AHU-2 - 240 VAC, 1Ø, 20.83 A
2. AHU-1 - 240 VAC, 1Ø, 37.50 A

Ampacity Formula
The total load in amperes is computed from the summation of each item utilizing the following formula:
Amperes = (item kW * 1000) / (panel Voltage * item power factor * item efficiency factor * square root of the panel phase)

Reprinted with permission from NFPA 70 2008, NEC copyright © 2008, National Fire Protection Association. This is not the complete and official position of the NFPA on the referenced subject which is represented only by the standard in its entirety. The title National Electric Code and the acronym NEC are registered trademarks of the National Fire Protection Association(NFPA).

Low Voltage Momentary Short Circuit Analysis Report
Per Unit Method - IEEE Standards 141, 242

Monday, Sep. 25, 2017

Supplied Information and Base Values

Utility Co.: UTILITY	Utility Line Starting Power: 1,000 MVA
XFMR Type: Single Phase	Base Line Voltage: 13.2 kV
75 kVA, 1Ø, 60Hz	Base Transformer Power: 75 kVA
Voltages: 13,200V pri / 240V sec	Base XR Ratio: 1.8
Impedance: 1.2%	Cables' Resistence (R) Computed At: 25ºC
Tolerance: 7.5%	Available Fault L-L: 28.153 kA
XR Ratio: 1.8	Available Fault L-G: 20 kA

			Maximum Fault Amperes		Protection Values	
Item Name	Ø	Voltage	Symmetrical	Asymmetrical	OCPD Type	Duty Amperes
• LA	1	240	10,456.5	10,856.7	LVPCB MCCB 10-20 kA MCCB > 20 kA	10,456.5 14,430 15,998.4
AHU-1	1	240	2,011.9	2,014.8	LVPCB MCCB 10-20 kA MCCB > 20 kA	2,011.9 2,776.4 3,078.2
AHU-2	1	240	1,364.7	1,365.6	LVPCB MCCB 10-20 kA MCCB > 20 kA	1,364.7 1,883.3 2,088.1
CU-1	1	240	3,542.4	3,558.2	LVPCB MCCB 10-20 kA MCCB > 20 kA	3,542.4 4,888.5 5,419.9
CU-2	1	240	1,609.3	1,610.8	LVPCB MCCB 10-20 kA MCCB > 20 kA	1,609.3 2,220.8 2,462.2
EHW-1	1	240	902	902.3	LVPCB MCCB 10-20 kA MCCB > 20 kA	902 1,244.8 1,380.1
IHW KITCHEN	1	120	471.3	471.4	LVPCB MCCB 10-20 kA MCCB > 20 kA	471.3 650.5 721.2
MEDICAL IHW SINK	1	120	471.3	471.4	LVPCB MCCB 10-20 kA MCCB > 20 kA	471.3 650.5 721.2
IHW BATH	1	120	471.3	471.4	LVPCB MCCB 10-20 kA MCCB > 20 kA	471.3 650.5 721.2
SPARE	1	120	471.3	471.4	LVPCB MCCB 10-20 kA MCCB > 20 kA	471.3 650.5 721.2
HAND DRYER	1	120	471.3	471.4	LVPCB MCCB 10-20 kA MCCB > 20 kA	471.3 650.5 721.2
HAND DRYER	1	120	471.3	471.4	LVPCB MCCB 10-20 kA MCCB > 20 kA	471.3 650.5 721.2
HAND DRYER	1	120	471.3	471.4	LVPCB MCCB 10-20 kA MCCB > 20 kA	471.3 650.5 721.2

Low Voltage Momentary Short Circuit Analysis Report
Per Unit Method - IEEE Standards 141, 242

Monday, Sep. 25, 2017

			Maximum Fault Amperes		Protection Values	
Item Name	Ø	Voltage	Symmetrical	Asymmetrical	OCPD Type	Duty Amperes
HAND DRYER	1	120	471.3	471.4	LVPCB MCCB 10-20 kA MCCB > 20 kA	471.3 650.5 721.2
EF-2	1	120	1,542	1,543.3	LVPCB MCCB 10-20 kA MCCB > 20 kA	1,542 2,128 2,359.3
EMERGENCY LTS (NON MEDICAL)	1	120	471.3	471.4	LVPCB MCCB 10-20 kA MCCB > 20 kA	471.3 650.5 721.2
LTS	1	120	471.3	471.4	LVPCB MCCB 10-20 kA MCCB > 20 kA	471.3 650.5 721.2
LTS	1	120	471.3	471.4	LVPCB MCCB 10-20 kA MCCB > 20 kA	471.3 650.5 721.2
LTS	1	120	471.3	471.4	LVPCB MCCB 10-20 kA MCCB > 20 kA	471.3 650.5 721.2
LTS	1	120	471.3	471.4	LVPCB MCCB 10-20 kA MCCB > 20 kA	471.3 650.5 721.2
LTS	1	120	471.3	471.4	LVPCB MCCB 10-20 kA MCCB > 20 kA	471.3 650.5 721.2
LTS	1	120	471.3	471.4	LVPCB MCCB 10-20 kA MCCB > 20 kA	471.3 650.5 721.2
LTS	1	120	471.3	471.4	LVPCB MCCB 10-20 kA MCCB > 20 kA	471.3 650.5 721.2
MEDICAL LTS	1	120	471.3	471.4	LVPCB MCCB 10-20 kA MCCB > 20 kA	471.3 650.5 721.2
RCPT TIMERS	1	120	471.3	471.4	LVPCB MCCB 10-20 kA MCCB > 20 kA	471.3 650.5 721.2
TRACK LTS	1	120	471.3	471.4	LVPCB MCCB 10-20 kA MCCB > 20 kA	471.3 650.5 721.2
MEDICAL RCPT	1	120	471.3	471.4	LVPCB MCCB 10-20 kA MCCB > 20 kA	471.3 650.5 721.2
RCPT	1	120	471.3	471.4	LVPCB MCCB 10-20 kA MCCB > 20 kA	471.3 650.5 721.2
RCPT	1	120	471.3	471.4	LVPCB MCCB 10-20 kA MCCB > 20 kA	471.3 650.5 721.2

Low Voltage Momentary Short Circuit Analysis Report
Per Unit Method - IEEE Standards 141, 242

Monday, Sep. 25, 2017

			Maximum Fault Amperes		Protection Values	
Item Name	Ø	Voltage	Symmetrical	Asymmetrical	OCPD Type	Duty Amperes
RCPT	1	120	471.3	471.4	LVPCB MCCB 10-20 kA MCCB > 20 kA	471.3 650.5 721.2
RCPT	1	120	471.3	471.4	LVPCB MCCB 10-20 kA MCCB > 20 kA	471.3 650.5 721.2
RCPT	1	120	471.3	471.4	LVPCB MCCB 10-20 kA MCCB > 20 kA	471.3 650.5 721.2
RCPT	1	120	471.3	471.4	LVPCB MCCB 10-20 kA MCCB > 20 kA	471.3 650.5 721.2
RCPT	1	120	471.3	471.4	LVPCB MCCB 10-20 kA MCCB > 20 kA	471.3 650.5 721.2
GRINDER	1	240	1,542	1,543.3	LVPCB MCCB 10-20 kA MCCB > 20 kA	1,542 2,128 2,359.3
RCPT	1	120	471.3	471.4	LVPCB MCCB 10-20 kA MCCB > 20 kA	471.3 650.5 721.2
RCPT	1	120	471.3	471.4	LVPCB MCCB 10-20 kA MCCB > 20 kA	471.3 650.5 721.2

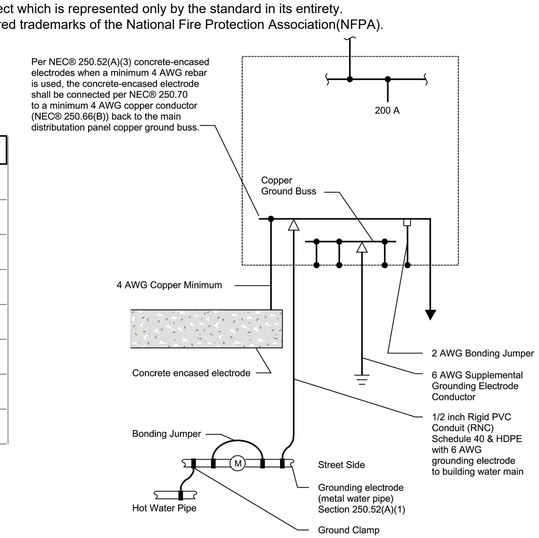

GALVESTON COUNTY
BEACH PAVILION
CRYSTAL BEACH, TX 77650

BE-Arc LLC Project No : C-13-007.01

bis Engineering
REG # F-11156
P.O. Box 1373
Galveston, Texas 77555
PH 409.621.6740
THIS PRINT IS THE PROPERTY OF BIS ENGINEERING IT MAY NOT BE TRACED, OR REPRODUCED IN ANY FORM OR MANNER, OR SUBMITTED, IN WHOLE OR IN PART, IF IT IS SUBMITTED WITHOUT PRIOR WRITTEN CONSENT FROM BIS ENGINEERING.

BRAX EASTERWOOD
DESIGN
2728 AVENUE Q SUITE 2
GALVESTON TEXAS 77550
PHONE 409-354-8976
EASTERWOOD@BEAIA.COM

DESIGN REVIEW

DATE	REVISION

DESIGN DEVELOPMENT

DATE ISSUED:
9/28/2017

COPYRIGHT 2017

E2.0

COUNTY APPROVAL:
SIGNATURE _____ DATE_____

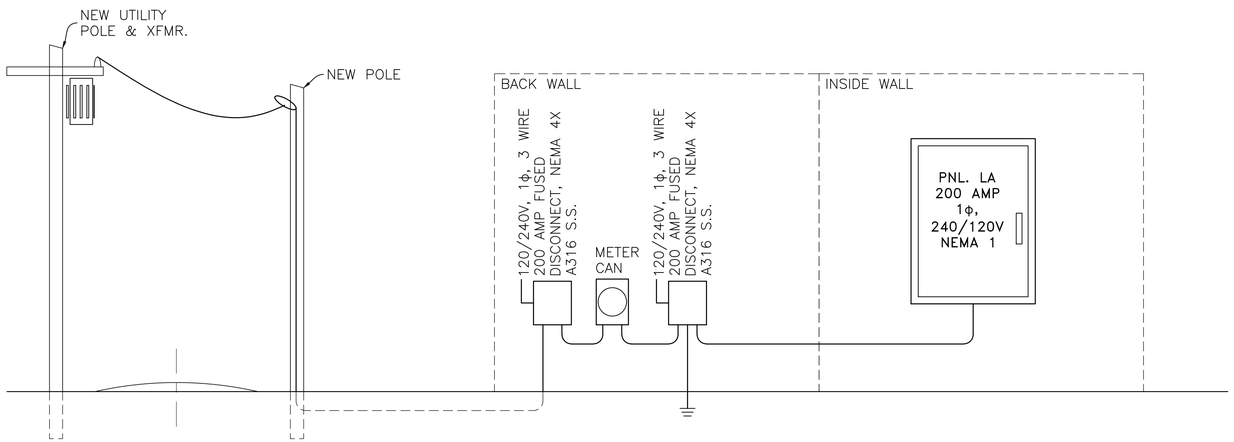

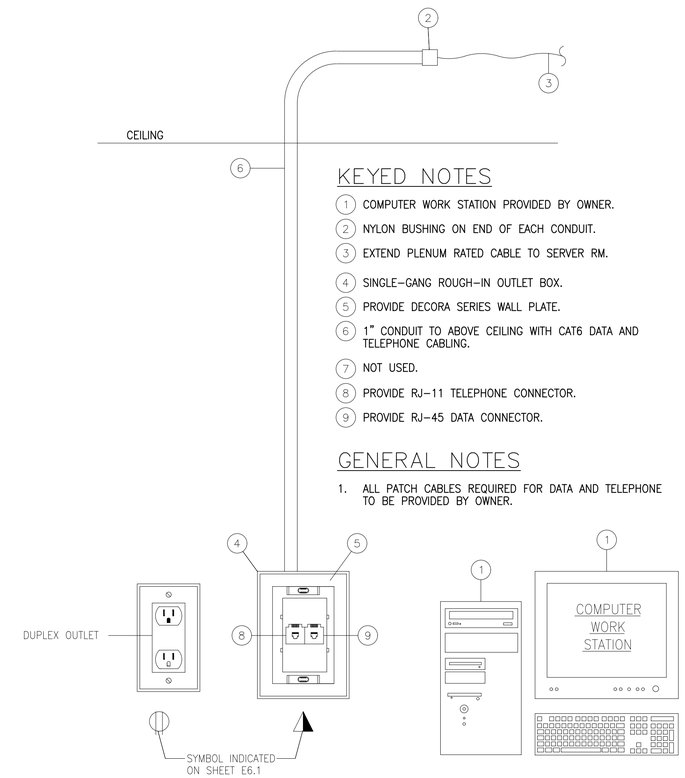

KEYED NOTES

1. COMPUTER WORK STATION PROVIDED BY OWNER.
2. NYLON BUSHING ON END OF EACH CONDUIT.
3. EXTEND PLENUM RATED CABLE TO SERVER RM.
4. SINGLE-GANG ROUGH-IN OUTLET BOX.
5. PROVIDE DECORA SERIES WALL PLATE.
6. 1" CONDUIT TO ABOVE CEILING WITH CAT6 DATA AND TELEPHONE CABLING.
7. NOT USED.
8. PROVIDE RJ-11 TELEPHONE CONNECTOR.
9. PROVIDE RJ-45 DATA CONNECTOR.

GENERAL NOTES

1. ALL PATCH CABLES REQUIRED FOR DATA AND TELEPHONE TO BE PROVIDED BY OWNER.

GALVESTON COUNTY
BEACH PAVILION
CRYSTAL BEACH, TX 77650

BE-Arc LLC Project No : C-13-007.01

bis Engineering
REG # F-11156
P.O. Box 1375
Galveston, Texas 77555
PH 409.621.5740

THIS PRINT IS THE PROPERTY OF BIS ENGINEERING IT MAY NOT BE TRACED, OR REPRODUCED, IN WHOLE OR IN PART, OR BE SUBMITTED WITHOUT PRIOR WRITTEN CONSENT FROM BIS ENGINEERING.

BRAX EASTERWOOD
DESIGN
2728 AVENUE Q SUITE 2
GALVESTON TEXAS 77550
PHONE 409-354-8976
EASTERWOOD@BEAIA.COM

DESIGN REVIEW

DATE	REVISION

DESIGN DEVELOPMENT

DATE ISSUED:
9/28/2017

COPYRIGHT 2017

E2.1

ELECTRICAL SPECIFICATIONS

ELECTRICAL CONDUCTORS

A. MANUFACTURERS: SUBJECT TO COMPLICANCE W/ REQUIREMENTS, PROVIDE BY ONE OF THE FOLLOWING:

ALCAN PRODUCTS CORPORATION; ALCAN CABE DIVISION.

AMERICAN INSULATED WIRE CORP.; A LEVITON COMPANY.

GENERAL CABLE CORPORATION.

SENATOR WIRE & CABLE COMPANY.

SOUTHWIRE COMPANY.

COPER CONDUCTORS: COMPLY W/ NEMA WC 70.

CONDUCTOR INSULATION: COMPLY W/ NEMA WC 70 FOR TYPES THW, THHN-THWN, XHHW, UF, USE, AND SO.

MULTICONDUCTOR CABE: COMPLY W/ NEMA WC 70 FOR ARMORED CABLE, TYPE AC,METAL-CLAD CABLE, TYPE MC, TYPE SO, AND TYPE USE W; FROUND WIRE.

B. CONDUCTOR MATERIAL APPLICATIONS:

COPPER. SOLID FOR NO. 10 AWG AND SMALLER; STRANDED FOR NO. 8 & LARGER.

C. CONDUCTOR INSULATION & MULTICONDUCTOR CABLE APPLICATIONS & WIRING METHODS

1. SERVICE ENTRANCE: TYPE THHN-THWN, SINGLE CONDUCTORS IN RACEWAY, TYPE SE OR USE MULTICONDUCTOR CABLE.
2. EXPOSED FEEDERS: TYPE THHN-THWN, SINGE CONDUCTORS IN RACEWAY.
3. FEEDERS CONCEALED IN CEILING, WALLS, PARTITIONS, & CRAWLSPACES: TYPE THHN-THWN, SINGLE CONDUCTORS IN RACEWAY.
4. FEEDER CONCEALED IN CONCRETE, BELOW SLABS-ON GRADE, & UNDERGROUND: TYPE THHN-THWN, SINGLE CONDUCTORS IN RACEWAY.
5. FEEDERS INSTALLED BELOW RAISED FLOORING: TYPE THHN-THWN, SINGLE CONDUCTORS IN RACEWAY.
6. EXPOSED BRANCH CIRCUITS, INCLUDING IN CRAWLSPACES: TYPE THHN-THWN, SINGLE CONDUCTORS IN RACEWAY, METAL-CLAD CABLE, TYPE MC.
7. BRANCH CIRCUITS CONCEALED IN CEILINGS, WALLS, & PARTITIONS: TYPE THHN-THWN, SINGLE CONDUCTORS IN RACEWAY, ARMORED CABLE, TYPE AC, METAL-CLAD CABLE, TYPE MC.
8. BRANCH CIRCUITS CONCEALED IN CONCRETE, BELW SLABS-ON-GRADE, & UNDERGROUND: TYPE THHN-THWN, SINGLE CONDUCTORS IN RACEWAY.
9. BRANCH CIRCUITS INSTALLED BELOW RAISED FLOORING: TYPE THHN-THWN, SINGLE CONDUCTORS IN RACEWAY OR ARMORED CABLE, TYPE AC, METAL-CLAD CABLE, TYPE MC.
10. BRANCH CIRCUITS INSTALLED IN PATIENT CARE AREAS: TYPE HCF-MCAP OR AC-HCF W/ ASSEMBLY CERTIFIED AS AN EQUIPMENT GROUNDING CONDUCTOR & A GREEN INSULATED EQUIPMENT GROUNDING CONDUCTOR CONNECTED TO ALL RECEPTABLES, METALLIC BOXES CONTAINING RECEPTACLES, & ALL METALLIC EQUIPMENT CASINGS.

GROUNDING

A. INSULATED CONDUCTORS: COPPER WIRE OR CABLE INSULATED FOR 600 V UNLESS OTHERWISE REQUIRED BY APPLICABLE CODE OR AUTHORITIES HAVING JURISDICTION.

B. BARE COPPER CONDUCTORS:

1. SOLID CONDUCTORS: ASTM B 3.
2. STRANDED CONDUCTORS: ASTM B 8.
3. BONDING CABLE: 28 KCMIL, 14 STRANDS OF NO. 17 AWG CONDUCTOR, ¼ INCH (6 MM) IN DIAMETER.
4. BONDING CONDUCTOR: MO 4 OR NO. 6 AWG, STRANDED CONDUCTOR.
5. BONDING JUMPER: COPPER TAPE, BRAIDED CONDUCTORS TERMINATED W/ COPPER FERRULES; 1-5/8 INCHES (41 MM) WIDE & 1/16 INCH (1.6 MM) THICK.

C. GROUNDING BUS: PREDRILLED RECTANGULAR BARS OF ANNEALED COPPER, ¼ BY 4 INCHES (6.3 BY 100 MM) IN CROSS SECTION, W/ 9/32 INCH (7.14-MM) HOLES SPACED 1⅛ INCHES (28 MM) APART. STAND-OFF INSULATORS FOR MOUNTING SHALL COMPLY W/ UL 891 FOR USE IN SWITCHBOARDS, 600 V. LEXAN, IMPULSE TESTED AT 5000 V.

D. CONNECTORS: LISTED & LABELED BY AN NRTL ACCEPTBLE TO AUTHORITIES HAVING JURISDICTION FOR APPLICATIONS IN WHICH USED & SPECIDIC TYPES, SIZES, & COMBINATIONS OF CONDUCTORS & OTHER ITEMS CONNECTED.

E. BOLTED CONNECTORS FOR CONDUCTORS & PIPES: COPPER OR COPPER ALLOY, PRESSURE TYPE W/ AT LEAST TWO BOLTS. PIPE CONNECTORS: CLAMP TYPE, SIZED FOR PIPE.

F. WELDED CONNECTORS: EXOTHERMIC-WELDING JITS OF TYPES RECOMMENDED BY KIT MANUFACTURER FOR MATERIALS BEING JOINED & INSTALLATION CONDITIONS.

G. BUS-BAR CONNECTORS: MECHANICAL TYPE, CAST SILICON BRONZE, SOLDERLESS COMPRESSION-TYPE WIRE TERMINALS, & LONG-BARREL, TWO-BOLT CONNECTION TO GROUND BUS BAR.

H. CONDUCTORS: INSTALL SOLID CONDUCTOR FOR NO. 8 AWG & SMALLER, & STRANDED CONDUCTORS FOR 6 AWG & LARGER UNLESS OTHERWSE INDICATED.

I. ISOLATED GROUNDING CONDUCTORS: GREEN-COLORED INSULATION W/ CONTINUOUS YELLOW STIPE, ON FEEDERS W/ ISOLATED GROUND, IDENTIFY GROUNDING CONDUCTOR WHERE VISIBLE TO NORMAL INSPECTION, W/ ALTERNATING BANDS OF GREEN & YELLOW TAPE, W/ AT LEAST THREE BANDS OF GREEN & TWO BANDS OF YELLOW.

J. CONDUCTOR TEMINATIONS & CONNECTIONS:
PIPE & EQUIPMENT GROUNDING CONDUCTOR TERMINATIONS: BOLTED CONNECTORS. UNDERGROUND CONNECTIONS: WELDED CONNECTIONS: WELDED CONNECTORS EXCEPT AT TEST WELLS & AS OTHERWISE INDICATED, CONNECTIONS TO GROUND RODS AT TEST WELLS: BOLTED CONNECTORS, CONNECTIONS TO STRUCTURAL STEEL: WELDED CONNECTORS.

K. EQUIPMENTT GROUNDING:
INSTALL INSULATED EQUIPMENT GROUNDING CONDUCTORS TO COMPLY W/ THE NEC & AS INDICATED ON THE DRAWINGS.

ELECTICAL HANGERS & SUPPORTS

A. COMPLY W/ NECA 1 & NECA 101 FOR APPLICATION OF HANGERS & SUPPORTS FOR ELECTRICAL & SYSTEMS EXCEPT IF REQUIREMENTS IN THIS SECTION ARE STRICTER, MAXIMUM SUPPORT SPACING & MINIMUM HANGER ROD SIZE FOR RACEWAY: SPACE SUPPORTS FOR EMT, IMC, & RMC AS SCHEDULED IN NECA 1, WHERE ITS TABLE 1 LISTS MAXIMUM SPACINGS LESS THAN STATED IN NFPA 70. MINIMUM ROD SIZE SHALL BE ¼ INCH (6 MM) IN DIAMETER, MULTIPLE RACEWAYS OR CABLES: INSTALL TRAPEZE-TYPE SUPPORTS FABRICATED W/ STEEL SLOTTED OR OTHER SUPPORT SYSTEM, SIZED SO CAPACITY CAN BE INCREASED BY AT LEAST 25 PERCENT IN FUTURE WITHOUT EXCEEDING SPECIFIED DESIGN LOAD KIMITS. SECURE RACEWAYS & CABLES TO THESE SUPPORTS W/ TWO-BOLT CONDUIT CPAMPS, SPRING-STEEL CLAMPS DESIGNED FOR SUPPORTING SINGLE CONDUITS WITHOUT BOLTS MAY BE USED FOR 1½ INCH (38-MM) & SMALLED RACWAYS SERVING BRANCH CIRCUITS & COMMUNICATION SYSTEMS ABOVE SUSPENDED CEILINGS & FOR FASTENING RACEWAYS TO TRAPEZE SUPPORTS.

B. SUPPORT INSTALLATION: COMPLY W/ NECA 1 & NECA 101 FOR INSTALLATION REQUIREMENTS EXCEPT AS SPECIFIED IN THIS ARTICALE.

C. RACEWAY SUPPORT METHODS: IN ADDITION TO METHODS DESCRIBED IN NECA 1, EMT, IMC, & RMC MAY BE SUPPORTED BY OPENINGS THROUGH STRUCTURE MEMBERS, AS PERMITTED IN NFPA 70.

D. STRENGTH OF SUPPORT ASSEMBLIES: WHERE NOT INDICATED, SELECT SIZES OF COMPONENTS SO STRENGTH WILL BE ADQUATE TO CARRY PRESENT & FUTURE STATIC LOADS WITHIN SPECIFIED LOADING LIMITS. MINIMUM STATIC DESIGN LOAD USED FOR STRENGTH DETERMINATION SHALL BE WEIGHT OF SUPPORTED COMPONENTS PLUS 200 LB (90 KG).

E. MOUNTING & ANCHORAGE OF SURFACE-MOUNTED EQUIPMENT & COMPONENTS: ANCHOR & FASTEN ELECTRICAL ITEMS & THEIR SUPPORTS TO BUILDING STRUCTURAL ELEMENTS BY THE FOLLOWING METHODS UNLESS OTHERWISE INDICATED BY CODE:

1. TO WOOD: FASTEN W/ LAG SCREWS OR THROUGH BOLTS.
2. TO NEW CONCRETE: BOLT TO CONCRETE INSERTS.
3. TO MASONRY: APPROVED TOGGLE-TYPE BOLTS ON HOLLOW MASONRY UNITS & EXPANSION ANCHOR FASTENERS ON SOLID MASONRY UNITS.
4. TO EXISTING CONCRETE: EXPANSION ANCHOR FASTENERS.
5. INSTEAD OF EXPANSION ANCHORS, POWDER-ACTUATED DRIVEN THEADED STUDS PROVIDED W/ LOCK WASHERS & NUTS MAY BE USED IN EXISTING STANDARD-WEIGHT CONCRETE 4 INCHES (100 MM) THICK OR GREATER. DO NOT USE FOR ANCHORAGE TO LIGHTWEIGHT-AGGREGATE CONCRETE OR FOR SLABS LESS THAN 4 INCHES (100 MM) THICK.
6. TO STEEL: WELDED THREADED STUDS COMPLYING W/ AWS D1.1/D1.1M, W/ LOCK WASHERS & NUTS OR BEAM CLAMPS (MSS TYPE 19, 21, 23, 25, OR 27) COMPLYING W/ MSS SP-69.
7. TO LIGHT STEEL: SHEET METAL SCREWS.
8. DRILL HOLES FOR EXPANSION ANCHORS IN CONCRETE AT LOCATIONS & TO DEPTHS THAT AVOID REINFORCING BARS.

ELECTRICAL CONDUIT

A. METAL CONDUIT & TUBING
MANUFACTURERS: SUBJECT TO COMPLIANCE W/ REQUIREMENTS, PROVIDE PRODUCTS BY ONE OF THE FOLLOWING:

1. AFC CABLE SYSTEMS, INC.
2. ALFLEX INC.
3. ALLIED TYBE & CONDUIT: A TYCO INTERNATIONAL LTD. CO.
4. ANAMET ELECTRICAL, INC.:; ANACONDA METAL HOSE.
5. ELECTRI-FLEX CO.
6. MAVERICK TUBE CORPORATION.
7. O-Z GEDNET; A UNIT OF GENERAL SIGNAL.
8. WHEATLAND TUBE COMPANY.

B. DIGID STEEL CONDUIT: ANSI 080.1.

C. ALUMINUM RIGID CONDUIT: ANSI C80.5.

D. IMC: ANSI C80.6.

E. PVC-COATED STEEL CONDUIT: PVC-COATED RIGID STEEL CONDUIT.

F. COMPLY W/ NEMA RN 1.

G. COATING THICKNESS: 0.040 INCH (1 MM), MINIMUM.

H. EMT: ANSI C80.3.

I. FMC: ZINC-COATED STEEL.

J. LFMC: FLEXBLE STEEL CONDUIT W/ PVC JACKET.

K. FITTINGS FOR CONDUIT (INCLUDING ALL TYPES & FLEXBLE & LIQUID TIGHT), EMT, & CABLE: NEMA FB1; LISTED FOR TYPE & SIZE RACEWAY W/ WHIGH USED, & FOR APPLICATION & ENVIRONMENT IN WHICH INSTALLED.

1. FITTINGS FOR EMT: STEEL SET-SCREW OR COMPRESSION TYPE, DIE-CAST IS NOT ACCEPTABLE.
2. COATING FOR FITTINGS FOR PVC-COATED CONDUIT: MINIMUM THICKNESS, 0.040 INCH (1 MM), W/ OVERLAPPING SLEEVES PROTECTING THREADED JOINTS.

L. JOINT COMPOUND FOR RIGID STEEL CONDUIT OR IMC: LISTED FOR USE IN CABLE CONNECTOR ASSEMBLIES, & COMPUNDED FOR USE TO LUBRICATE & PROTECT THREADED RACEWAY JOINTS FROM CORROSION & ENHANCE THEIR CONDUCTIVITY.

M. SURFACE METAL RACEWAYS: GALVANIZED STEEL W/ SNAP-ON COVERS. MANUFACTURER'S STANARD ENAMEL FINISH IN COLOR SELECTED BY ARCHITECT.
MANUFACTURERS: SUBJECT TO COMPLIANCE W/ REQUIREMENTS, PROVIDE PRODUCTS BY ONE OF THE FOLLOWING:

1. THOMAS & BETTS CORPORATION.
2. WALKER SYSTEMS, INC.; WIREMOLD COMPANY (THE).
3. WIREMOLD COMPANY (THE); ELECTRICAL SALES DIVISION.

N. BOXES, ENCLOSURES, & CABINETS:
MANUFACTURERS: SUBJECT TO COMPLIANCE W/ REQUIREMENTS, PROVIDE PRODUCTS BY ONE OF THE FOLLOWING:

1. COOPER CROUSE-HINDS; DIV. OF COOPER INDUSTRIES, INC.
2. EGS/ APPLETON ELECTRIC.
3. HOFFMAN.
4. HUBBELL INCRPORATED; KILLARK ELECTRIC MANUFACTURING CO. DIVISION.
5. O-Z/ GEDNEY; A UNIT OF GENERAL SIGNAL.
6. RACO; A HUBBELL COMPANY.
7. ROBROY INDUSTRIES, INC.; ENCLOSURE DIVISION.
8. THOMAS & BETTS CORPORATION.
9. WALKER SYSTEMS, INC.; WIREMOLD COMPANY (THE).

O. SHEET METAL OUTLET & DEVICE BOXES: NEMA OS 1.

P. CAST-METAL OUTLET & DEVICE BOXES: NEMA FB 1, FERROUS ALLOY, TYPE FD, W/ GASKETED COVER.

Q. METAL FLOOR BOXES; CAST METAL, FULLY ADJUSTABLE, RECTANGULAR.

R. SMALL SHEET METAL PULL & JUNCTION BOXES: NEMA OS 1.

S. CAST-METAL ACCESS, PULL, & JUNCTION BOXES: NEMA FB 1, GALVANIZED, CAST IRON W/ GASKETED COVER.

T. HINGED-COVER ENCLOSURES: NEMA 250, TYPE 1, W/ CONTINUOUS-HINGE COVER W/ FLUSH LATCH, UNLESS OTHERWIRE INDICATED.

1. METAL ELCLOSURES: STEEL, FINISHED INSIDE & OUT W/ MANUFACTURER'S STANDARD ENAMEL.

A. IN STANDARD PARTITIONS, WHERE ½" & ¾" CONDUITS ARE EMPLOYED: 4" SQUARE BY 2⅛" DEEP BOXES W/ 1-GANG PLASTER COVERS SHALL BE USED, NO. 4SD-SPL.

B. IN THIN PARTITIONS MEASURING 3½" OR LESS: 4" SQUARE BY 1½" DEEP BOXES W/ 1-GANG OR 2-GANG PLASTER COVERS BE USED, NO. 4S-SPL.

C. IN STANDARD PARTITIONS, WHERE CONDUITS OF A SIZE GREATER THAN ¾" ARE EMPLOYED: 4" SQUARE BY 2⅛" DEEP BOXES W/ 1-GANG OF 2-GANG PLASTER COVERS SHALL BE USED, NO. 4SJD SERIES. THE OUTLET BOXES SHALL BE LOCATED WHEREBY NO. TWO (2) OUTLET BOXES ARE INSTALLED CLOSER THAN 24" ON CENTER, & SECURELY ATTACHED TO THE PARTITION STUDS, W/ AT LEAST ONE (1) PARITITION STUD SEPARATING THE OUTLET BOXES. IT IS NOT ACCEPTABLE TO SECURE OUTLET BOXES ONLY TO DRYWALL PARTITION.

U. CABINETS:

1. NEMA 250, TYPE 1, GALVANIZED-STEEL BOX W/ REMOVABLE INTERIOR PANEL & REMOVABLE FRONT, FINISHED INSIDE & OUT W/ MANUFACTURER'S STANDARD ENAMEL.
2. HINGED DOOR IN FRONT COVER W/ FLUSH LATCH & CONCEALED HINGE.
3. KEY LATCH TO MATCH PANELBOARDS.
4. METAL BARRIERS TO SEPARATE WIRING OF DIFFERENT SYSTEMS & VOLTAGE.
5. ACCESSORY FEET WHERE REQUIRED FOR FREESTANDING EQUIPMENT.

V. RACEWAY APPLICATION:
OUTDOORS: APPLY RACEWAY PRODUCTS AS SPECIFIED BELOW, UNLESS OTHERWISE INDICATED:

1. EXPOSED CONDUIT: RIGID STEEL CONDUIT.
2. CONCEALED CONDUIT, ABOVEGROUND: RIGID STEEL CONDUIT, EMT, RNC.
3. UNDERGROUND CONDUIT: RNC, TYPE EPC-40-PVC, DIRECT BURIED.
4. CONNECTION TO VIBRATING EQUIPMENT (INCLUDING TRANSFORMERS & HYDRAULIC, PNEUMATIC, ELECTRIC SOLENOID, OR MOTOR-DRIVEN EQUIPMENT): LFMC.
5. BOXES & ENCLOSURES, ABOVEGROUND: NEMA 250, TYPE 3R.

Z. COMPLY W/ THE FOLLOWING INDOOR APPLICATIONS, UNLESS OTHERWISE INDICATED:

1. EXPOSED, NOT SUBJECT TO PHYSICAL DAMAGE: EMT.
2. EXPOSED, NOT SUBJECT TO SEVERE PHYSICAL DAMAGE: EMT.

3. EXPOSED, NOT SUBJECT TO SEVERE PHYSICAL DAMAGE: RIGID STEEL CONDUIT. INCLUDES RACEWAYS IN THE FOLLOWING LOCATIONS: LOADING DOCK, CORRIDORS USED FOR TRAFFIC OR MECHANIZED CARTS, FORKLIFTS, & PALLET-HANDLING UNITS, MECHANICAL ROOMS.

4. CONCEALED IN CEILINGS & INTERIOR WALLS & PARTITIONS: EMT.

5. CONNECTION TO VIBRATING EQUIPMENT (INCLUDING TRANSFORMERS & HYDRAULIC, PNEUMATIC, ELECTRIC SOLENOID, OR MOTOR-DRIVEN EQUIPMENT): FMC, EXCEPT USE LFMC IN DAMP OR WET LOCATIONS.

6. DAMP OF WET LOCATIONS: RIGID STEEL CONDUIT.
7. RACEWAYS FOR OPTICAL FIBER OR COMMUNICATIONS CABE IN SPACES USED FOR ENVIRONMENTAL AIR: PLENUM-TYPE, OPTICAL FIBER/ COMMUNICATIONS CABLE RECEWAY, EMT.
8. RACEWAYS FOR OPTICAL FIBER OR COMMUNICATIONS CABLE RISERS IN VERTICAL SHAFTS: RISER-TYPE, OPTICAL FIBER/ COMMUNICATIONS CABLE RACEWAY, EMT.
9. RACEWAYS FOR CONCEALED GENERAL PURPOSE DISTRIBUTION OF OPTICAL FIBER OR COMMUNICATIONS CABLE: GENERAL-USE, OPTICAL FIBER/ COMMUNICATIONS CABLE RACEWAY, RISER-TYPE, OPTICAL FIBER/ COMMUNICATIONS CABLE RACEWAY, PLENUM-TYPE, OPTICAL FIBER/ COMMUNICATIONS CABLE RACEWAY, EMT.
10. BOXES & ENCLOSURES: NEMA 250, TYPE 1, EXCEPT USE NEMA 250, TYPE 4X, STAINLESS STEEL IN DAMP OR WET LOCATIONS.

AA. MINIMUM RACEWAY SIZE: ½ INCH (16-MM) TRADE SIZE.

AB. RACEWAY FITTINGS: COMPATIBLE W/ RACEWAYS & SUITABLE FOR USE & LOCATION.

1. RIGID & INTERMEDIATE STEEL CONDUIT: USE THREADED RIGID STEEL CONDUIT FITTINGS, UNLESS OTHERWISE INDICATED.
2. PVC EXTERNALLY COATED, RIGID STEEL CONDUITS: USE ONLY FITTINGS LISTED FOR USE W/ THAT MATERIAL. PATCH & SEAL ALL JOINTS, NICKS, & SCRAPES IN PVC W/ THAT MATERIAL. PATCH & SEAL ALL JOINTS, NICKS, & SCRAPES IN PVC COATING AFTER INSTALLING CONDUITS & FITTINGS. USE SEALANT RECOMMENDED BY FITTING MANUFACTURER.

AC. INSTALLATION
COMPLY W/ NECA 1 FOR INSTALLATION REQUIREMENTS APPLICABLE TO PRODUCTS SPECIFIED EXCEPT WHERE REQUIREMENTS ON DRAWINGS OR IN THIS ARTICLE ARE STRICTER.

AD. KEEP RACEWAYS AT LEAST 6 INCHES (150 MM) AWAY FROM PARALLED RUNS OF FLUES & STEAM OR HOT-WATER PIPES. INSTALL HORIZONTAL RACEWAY RUNS ABOVE WATER & STEAM PIPING.

AE. COMPLETE RACEWAY INTALLATION BEFORE STATING CONDUCTOR INSTALLATION.

AF. SUPPORT RACEWAYS AS SPECIFIED IN "HANGERS & SUPPORTS FOR ELECTRICAL SYSTEMS."

AG. ARRANGE STUB-UPS SO CURVED PORTIONS OF BENDS ARE NOT VISIBLE ABOVE THE FINISHED SLAB.

AH. INSTALL NO MORE THAN THE EQUIVALENT OF THREE 90-DEGREE BENDS IN ANY CONDUIT RUN EXCEPT FOR COMMUNICATIONS CONDUITS, FOR WHICH FEWER BENDS ARE ALLOWED.

AI. CONCEAL CONDUIT & EMT WITHIN FINISHED WALLS, CEILINGS, & FLOORS, UNLESS OTHERWISE INDICATED.

AJ. RACEWAYS EMBEDDED IN SLABS:

1. RUN CONDUIT LARGER THAN 1-INCH (27-MM) TRADE SIZE, PARALLED OR AT RIGHT ANGLES TO MAIN REINFORCEMENT. WHERE AT RIGHT ANGLES TO REINFORCEMENT, PLACE CONDUIT CLOSE TO SLAB SUPPORT.
2. ARRANGE RACEWAYS TO CROSS BUILDING EXPANSION JOINTS AT RIGHT ANGLES W/ EXPANSION FITTINGS.
3. CHANGE FROM ENT TO RNC, TYPE EPC-40-PVC, RIGID STEEL CONDUIT, OF IMC BEFORE RISING ABOVE THE FLOOR.

AK. THREADED CONDUIT JOINTS, TEPOSED T WET, DAMP, CORROSIVE, OR OUTDOOR CONDITIONS: APPLY LISTED COMPOUND TO THREADS OF RACEWAY & FITTINGS BEFORE MAKING UP JOINTS. FOLLOW COMPOUND MANUFACTURER'S WRITTEN INSTRUCTIONS.

AL. RACEWAY TERMINATIONS AT LOCATIONS SUBJECT TO MOISTURE OR VIBRATION: USE INSULATING BUSHINGS TO PROTECT CONDUCTORS, INCLUDING CONDUCTORS SMALLER THAN NO. 4 AWG.

AM. INSTALL PULL WIRES IN EMPTY RACEWAYS. USE POLYPROPYLENE OR MONOFILAMENT PLASTIC LINE W/ NOT LESS THAN 200-LB (90-KG) TENSILE STRENGTH. LEAVE AT LEAST 12 INCHES (300 MM) OF SLACK AT EACH END OF PULL WIRE.

AN. RACEWAYS FOR OPTICAL FIBER & COMMUNICATIONS CABLE: INSTALL RACWAYS. METALLIC & NONMETALLIC, RIGID & FLEXIBLE, AS FOLLOW:

1. ¾ INCH (19-MM) TRADE SIZE & SMALLER: INSTALL RACEWAYS IN MAXIMUM LENGTHS OF 50 FEET (15 M).
2. 1-INCH (25-MM) TRADE SIZE & LARGER: INSTALL RACEWAYS IN MAXIMUM LENGTHS OF 75 FEET (23 M).
3. INSTALL W/ A MAXIMUM OF TWO 90-DEGREE BENDS OR EQUIVALENT FOR EACH LENGTH OF RECEWAY UNLESS DRAWINGS SHOW STRICTER REQUIREMENTS. SEPARATE LENGTHS W/ PULL OR JUNCTION BOXES OR TERMINATIONS AT DISTRICUTION FRAMES OR CABINETS WHERE NECESSARY TO COMPLY W/ THESE REQUIREMENTS.

AO. INSTALL RACEWAY SEALING FITTINGS AT SUITABLE, APPROVED, & ACCESSIBLE LOCATIONS & FILL THEM W/ LISTED SEALING COMPOUND. FOR CONCEALED RACEWAYS, INSTALL EACH FITTING IN A FLUSH STEEL BOX W/ A BLANK COVER PLATE HAVING A FINISH SIMLAR T THAT OF ADJACENT PLATES OR SURFACES. INSTALL RACEWAY SEALING FITTINGS AT THE FOLLOWING POINTS:

1. WHERE CONDUITS PASS FROM WARM TO COLD LOCATOINS, SUCH AS BOUNDARIES OF REFRIGERATED SPACES.
2. WHERE OTHERWISE REQUIRED BY NFPA 70.

AP. FLEXIBLE CONDUIT CONNECTIONS: USE MAXMUM OF INCHES (1219 MM) OF FLEXIBLE CONDUIT FOR RECESSED & SEMIRECESSED LIGHTING FIXTURES, EQUIPMENT SUBJECT TO VIBRATION, NOISE TRANSMISSION, OR MOVEMENT; & FOR TRANSFORMERS & MOTORS.

1. USE LFMC IN DAMP OR WET LOCATIONS.

AQ. RECESSED BOXES IN MASONRY WALLS: SAW-CUT OPENING FOR BOX IN CENTER OF CELL OF MASORY BLOCK, & INSTALL BOX FLUSH W/ SURFACE OF WALL.

AR. SET METAL FLOOR BOXES LEVEL & FLUSH W/ FINISHED FLOOR SURFACE.

AS. FIRESTOPPING
APPLY FIRESTOPPING TO ELECTRICAL PENETRATIONS OF FIRE-RATED FLOOR & WALL ASSEMBLIES TO RESTORE ORIGINAL FIRE-RESISTANCE RATING OF ASSEMBLY. PROVIDE SLEEVES FOR FLOOR PENETRATIONS EXTENDING 2" ABOVE FLOOR EXCEPT IN FINISHED AREAS WHERE COORDINATED W/ ARCHITECT.

CONT. ON E3.1

COUNTY APPROVAL:
SIGNATURE ______________________________ DATE____________

GALVESTON COUNTY
BEACH PAVILION
CRYSTAL BEACH, TX 77650

BE-Arc LLC Project No : C-13-007.01

ibis Engineering
REG # F-11156
P.O. Box 55171
Galveston, Texas 77555
PH 409.621.6740

THIS PRINT IS THE PROPERTY OF IBIS ENGINEERING IT MUST NOT BE TRACED OR REPRODUCED IN ANY MANNER NOR SHALL IT BE SUBMITTED WITHOUT PRIOR WRITTEN CONSENT FROM IBIS ENGINEERING.

BRAX EASTERWOOD
DESIGN
2728 AVENUE Q SUITE 2
GALVESTON TEXAS 77550
PHONE 409-354-8976
EASTERWOOD@BEAIA.COM

DESIGN REVIEW

DATE	REVISION

DESIGN DEVELOPMENT

DATE ISSUED:
9/28/2017

COPYRIGHT 2017

E3.0

ELECTRICAL SPECFICATIONS (CONT.)

PANELBOARDS

A. ENCLOSURES: FLUSH- AND SURFACE-MOUNTED CABINETS. RATED FOR ENVIRONMENTAL CONDITIONS AT INSTALLED LOCATION. INDOOR DRY & CLEAN LOCATIONS: NEMA 250, TYPE 1. OUTDOOR LOCATIONS: NEMA 250, TYPE 3R. WET OR DAMP INDOOR LOCATIONS: NEMA 250, TYPE 4X STAINLESS STEEL.

B. FRONT: SECURED TO BOX W/ CONCEALED TRIM CLAMPS. FOR SURFACE-MOUNTED FRONTS, MATCH BOX DIMENSIONS; FOR FLUSH-MOUNTED FRONTS, OVERLAP BOX.

C. HINGED FRONT COVER: ENTIRE FRONT TRIM HINGED TO BOX & W/ STANDARD DOOR WITHIN HINGED TRIM COVER.

D. FINISHES:
PANELS & TRIM: GALVANIZED STEEL, FACTORY FINISHED IMMEDIATELY AFTER CLEANING & PRETREATING W/ MANUFACTURER'S STANDARD TWO-COAT, BAKED-ON FINISH CONSITSTING OF PRIME COAT & THERMOSETTING TOPCOAT.

E. BACK BOXES: GALVANIZED STEEL.

F. FUNGUS PROOFING: PERMANENT FUNGICIDAL TREATMENT FOR OVERCURRENT PROTECTIVE DEVICES & OTHER COMPONENTS.

G. DIRECTORY CARD: INSIDE PANELBOARD DOOR, MOUNTED IN TRANSPARENT CARD HOLDER.

H. INCOMING MAINS LOCATION: TOP & BOTTOM.

I. PHASE, NEUTRAL & GROUND BUSES:
MATERIAL: HARD-DRAWN COPPER, 98 PERCENT CONDUCTIVITY. EQUIPMENT GROUND BUS: ADEQUATE FOR FEEDER & BRANCH-CIRCUIT EQUIPMENT GROUNDING CONDUCTORS; BONDED TO BOX.

J. CONDUCTOR CONNECTORS: SUITABLE FOR USE W/ CONDUCTOR MATERIAL & SIZES. MATERIAL: HARD-DRAWN COPPER, 98 PERCENT CONDUCTIVITY. MAIN & NEUTRAL LUGS: COMPRESSION TYPE. CROUND LUGS & BUS-CONFIGURED TERMINATORS: COMPRESSION TYPE. FEED-THROUGH LUGS: COMPRESSION TYPE, SUITABLE FOR USE W/ CONDUCTOR MATERIAL. LOCATE AT OPPOSITE END OF BUS FROM INCOMING LUGS OR MAIN DEVICE.

K. PANELBOARD SHORT-CIRCUIT CURRENT RATING: FULLY RATED TO INTERRUPT SYMMETRICAL SHORT-CIRCUIT CURRENT AVAILABLE AT TERMINALS.

L. LIGHTING & APPLIANCE BRANCH-CIRCUIT PANELBOARDS MANUFACTURERS: SUBJECTOT COMPLIANCE W/ REQUIREMENTS, PROVIDE PRODUCTS BY ONE OF THE FOLLOWING:

EATON ELECTRICAL INC.; CUTLER-HAMMER BUSINESS UNIT.

GENERAL ELECTRIC COMPANY; GE CONSUMER & INDUSTRIAL

SIEMENS ENERGY & AUTOMATION, INC.

SQUARE D; A BRAND OF SCHNEIDER ELECTRIC.

PANELBOARDS: NEMA PB 1, LIGHTING & APPLIANCE BRANCH-CIRCUIT TYPE.

MAINS: CIRCUIT BREAKER OR LUGS ONLY.

BRANCH OVERCURRENT PROTECTIVE DEVICES: BOLT-ON CIRCUIT BREAKERS, REPLACEABLE WITHOUT DISTURBING ADJACENT UNITS.

DOORS: CONCEALED HINGES; SECURED W/ FLUSH LATCH W/ TUMBLER LOCK; KEYED ALIKE.

LIGHTING FIXTURES

A. GENERAL REQUIREMENTS FOR LIGHTING FIXTURES & COMPONENTS,

1. RECESSED FIXTURES: COMPLY W/ NEMA LE 4 FOR CEILING COMPATIBILITY FOR RECESSED FIXTURES.

2. INCANDESCENT FIXTURES: COMPLY W/ UL 1598. WHERE LER IS SPECIFIED, TEST ACCORDING TO NEMA LE 5A.

3. FLUORESCENT FIXTURES: COMPLY W/ UL 1598. WHERE LER IS SPECIFIED, TEST ACCORDING TO NEMA LE 5 & NEMA LE 5A AS APPLICABLE.

4. HID FIXTURES: COMPLY W/ UL 1598. WHERE LER IS SPECIFIED, TEST ACCORDING TO NEMA LE 5B.

METAL PARTS: FREE OF BURRS & SHARP CORNERS & EDGES. SHEET METAL COMPONENTS: STEEL UNLESS OTHERWISE INDICATED. FORM & SUPPORT TO PREVENT WARPING & SAGGING. DOORS, FRAMES, & OTHER INTERNAL ACCESS: SMOOTH OPERATING, FREE OF LIGHT LEAKAGE UNDER OPERATING CONDITIONS, & DESIGNED TO PERMIT RELAMPING WITHOUT USE OF TOOLS. DESIGNED TO PREVENT DOORS, FRAMES, LENSES, DIFFUSERS,& OTHER COMPONENTS FROM FALLING ACCIDENTALLY DURING RELAMPING & WHEN SECURED IN OPERATING POSITION.

B. DIFFUSERS & GLOBES:

1. ACRYLIC LIGHTING DIFFUSERS: 100 PERCENT VIRGIN ACRYLIC PLASTIC. HIGH RESISTANCE RADIATION.

2. LENS THICKNESS: AT LEAST 0.125 INCH (3.175 MM) MINIMUM UNLESS OTHERWISE INDICATED.

3. UV STABILIZED.

4. GLASS: ANNEALED CRYSTAL GLASS UNLESS OTHERWISE INDICATED.

C. FACTORY-APPLIED LABELS: COMPLY W/ UL 1598. INCLUDE RECOMMENDED LAMPS & BALLASTS. LABELS SHALL BE LOCATED WHERE THEY WILL BE READILY VISIBLE TO SERVICE PERSONNEL, BUT NOT SEEN FROM NORMAL VIEWING ANGLES WHEN FAMPS ARE IN PLACE. DABEL SHALL INCLUDE THE FOLLOWING LAMP & BALLAST CHARACTERISTICS:

1. "USE ONLY" & INCLUDE SPECIFIC LAMP TYPE.

2. LAMP DIAMETER CODE (T-4, T-5, T-8, T-12, ETC.) TUBE CONFIGURATION (TWIN, QUAD, TRIPLE, ETC.), BASE TYPE, & NOMINAL WATTAGE FOR FLUORESCENT & COMPACT FLUORESCENT LUMINAIRES.

3. LAMP TYPE, WATTAGE, BULB TYPE (ED17, BD56, ETC.) & COATING (CLEAR OR COATED) FOR HID LUMINAIRES.

4. START TYPE (PREHEAT, RAPID START, INSTANT START, ETC.) FOR FLUORESCENT & COMPACT FLUORESCENT LUMINAIRES.

5. ANSI BALLAST TYPE (M98, M57, ETC.) FOR HID LUMINAIRES.

6. CCT & CRI FOR ALL LUMINAIRES.

D. ELECTROMAGNETIC-INTERFERENCE FILTERS: FACTORY INSTALLED TO SUPPRESS CONDUCTED ELECTROMAGNETIC INTERFERENCE AS REQUIRED BY MIL-STD-461E. FABICATE LIGHTING FIXTURES W/ ONE FILTER ON EACH BALLAST INDICATED TO REQUIRE A FILTER.

BALLASTS

A. BALLASTS FOR LINEAR FLUORESCENT LAMPS, GENERAL REQUIREMENTS FOR ELECTRONIC BALLASTS:

1. COMPLY W/ UL 935 AND W/ ANSI C82.11.

2. DESIGNED FOR TYPE AND QUANTITY OF LAMPS SERVED.

3. BALLASTS SHALL BE DESIGNED FOR FULL LIGHT OUTPUT UNLESS ANOTHER BF, DIMMER, OR BI-LEVEL CONTROL IS INDICATED.

4. SOUND RATING: CLASS A.

5. TOTAL HARMONIC DISTORTION RATING: LESS THAN 10 PERCENT.

6. TRANSIENT VOLTAGE PROTECTION: IEEE C62.41.1 AND IEEE C62.41.2, CATEGORY A OR BETTER.

7. OPERATING FREQUENCY: 42 KHZ OR HIGHER.

8. LAMP CURRENT CREST FACTOR: 1.7 OR LESS.

9. BF: .088 OR HIGHER.

10. POWER FACTOR: .95 OR HIGHER.

11. PARALLEL LAMP CIRCUITS: MULTIPLE LAMP BALLASTS SHALL COMPLY W/ ANSI C82.11 AND SHALL BE CONNECTED TO MAINTAIN FULL LIGHT OUTPUT ON SURVIVING LAMPS IF ONE OR MORE LAMPS FAIL.

B. LUMINAIRES CONTROLLED BY OCUPANCY SENSORS SHALL HAVE PROGRAMMED-START BALLASTS.

C. ELECTRONIC PROGRAMMED-START BALLASTS FOR T8 AND T5 AND T5HO LAMPS: COMPLY W/ ANSI C82.11 AND THE FOLLOWING:

1. LAMP END-OF-LIFE DETECTION AND SHUTDOWN CIRCUIT FOR T5 DIAMETER LAMPS.

2. AUTOMATIC LAMP STARTING AFTER LAMP REPLACEMENT.

D. ELECTROMAGNETIC BALLASTS: COMPLY W/ ANSI C82.1; ENERGY SAVING, HIGH-POWER FACTOR, CLASS P, AND HAVING AUTOMATIC-RESET THERMAL PROTECTION.

E. BALLAST MANUFACTURER CERTIFICATION: INDICATED BY LABEL.

F. SINGLE BALLASTS FOR MULTIPLE LIGHTING FIXTURES: FACTORY WIRED W/ BALLAST ARRANGEMENTS AND BUNDLED EXTENSION WIRING TO SUIT FINAL INSTALLATION COMDITIONS WITHOUT MODIFICATION OR REWIRING IN THE FIELD.

G. BALLASTS FOR COMPACT FLUORESCENT LAMPS.

H. DESCRIPTION: ELECTRONIC-PROGRAMMED RAPID-START TYPE, COMPLYING W/ UL 935 AND W/ ANSI C 82.11, DESIGNED FOR TYPE AND QUANTITY OF LAMPS INDICATED. BALLAST SHALL BE DESIGNED FOR FULL LIGHT OUTPUT UNLESS DIMMER OR BI-LEVEL CONTROL IS INDICATED:

1. LAMP END-OF-LIFE DETECTION AND SHUTDOWN CIRCUIT.

2. AUTOMATIC LAMP STARTING ATER LAMP REPLACEMENT.

3. SOUND RATING: CLASS A.

4. TOTAL HARMONIC DISTORTION RATING: LESS THAN 20 PERCENT.

5. TRANSIENT VOLTAGE PROTECTION: IEEE C62.41.1 AND IEEE C62.41.2, CATEGORY A OR BETTER.

6. OPERATING FREQUENCY: 20 KHZ OR HIGHER.

7. LAMP CURRENT CREST FACTOR: 1.7 OR LESS.

8. BF: 0.95 OR HIGHER UNLESS OTHERWISE INDICATED.

9. POWER FACTOR: 0.95 OR HIGHER.

10. INTERFERENCE: COMPLY W/ 47 CFR 18, CH. 1, SUBPART C, FOR LIMITATIONS ON ELECTROMAGNETIC AND RADIO-FREQUENCY INTERFERENCE FOR NONCONSUMER EQUIPMENT.

FLUORESCENT LAMPS

A. T8 RAPID-START LAMPS, RATED 32 W MAXIMUM, NOMINAL LENGTH OF 48 INCHES (1220 MM), 2800 INITIAL LUMENS (MINIMUM), CRI 85 (MINIMUM), COLOR TEMPERATURE 3000 K, AND AVERAGE RATED LIFE 20,000 HOURS UNLESS OTHERWISE INDICATED.

B. T8 RAPID-START LAMPS, RATED 17 W MAXIMUM, NOMINAL LENGTH OF 24 INCHES (610 MM), 1300 INITIAL LUMENS (MINIMUM), CRI 85 (MINIMUM), COLOR TEMPERATURE 3000 K, AND AVERAGE RATED LIFE 20,000 HOURS UNLESS OTHERWISE INDICATED.

C. T5 RAPID-START LAMPS, RATED 28 W MAXIMUM, NOMINAL LENGTH OF 45.2 INCHES (1150 MM), 2900 INITIAL LUMENS (MINIMUM), CRI 85 (MINIMUM), COLOR TEMPERATURE 3000 K, AND AVERAGE RATED LIFE 20,000 HOURS UNLESS OTHERWISE INDICATED.

D. T5HO RAPID-START,HIGH-OUTPUT LAMPS, RATED 54 W MAXIMUM, NOMINAL LENGTH OF 45.2 INCHES (1150 MM), 5000 INITIAL LUMENS (MINIMUM), CRI 85 (MINIMUM), COLOR TEMPERATURE 4100 K, AND AVERAGE RATED LIFE 20,000 HOURS UNLESS OTHERWISE INDICATED.

E. COMPACT FLUORESCENT LAMPS: 4-PIN, CRI 80 (MINIMUM), COLOR TEMPERATURE 3000 K, AND AVERAGE RATED LIFE 10,000 HOURS AT THREE HOURS OPERATION PER START, AND SUITABLE FOR USE W/ DIMMING BALLASTS UNLESS OTHERWISE INDICATED.

1. 13 W: T4, DOUBLE OR TRIPLE TUBE, RATED 900 INTIAL LUMENS (MINIMUM).

2. 18 W: T4, DOUBLE OR TRIPLE TUBE, RATED 1200 INTIAL LUMENS (MINIMUM).

3. 26 W: T4, DOUBLE OR TRIPLE TUBE, RATED 1800 INTIAL LUMENS (MINIMUM).

4. 32 W: T4, TRIPLE TUBE, RATED 2400 INTIAL LUMENS (MINIMUM).

5. 42 W: T4, TRIPLE TUBE, RATED 2400 INTIAL LUMENS (MINIMUM).

6. 57 W: T4, TRIPLE TUBE, RATED 2400 INTIAL LUMENS (MINIMUM).

7. 70 W: T4, TRIPLE TUBE, RATED 2400 INTIAL LUMENS (MINIMUM).

WIRING DEVICES

A. MANUFACTURERS:

1. COOPER WIRING DEVICES;

2. HUBBELL INCORPORATED; WIRING DEVICE-KELLUMS

3. LEVITON MFG. COMPANY INC.

4. PASS & SEYMOUR/ LEGRAND; WIRING DEVICES & ACCESSORIES

B. ALL WIRING DEVICES TO BE WHITE OR COLOR AS SELECTED BY ARCHITECT.

C. STRAIGHT BLADE RECEPTACLES:
CONVENIENCE RECEPTABLES, 125 V, 20 A: COMPLY W/ NEMA WD 1, NEMA WD 6 CONFIGURATION 5-20R, AND UL 498. PRODUCTS: SUBJECT TO COMPLIANCE W/ REQUIREMENT, PROVIDE ONE OF THE FOLLOWING:

1. LEVITON; 16341-W (SINGLE), 16362-W (DUPLEX).

2. ANY EQUAL BY ABOVE LISTED MANUFACTURERS.

D. ISOLATED-GROUND, DUPLEX CONVENIENCE RECEPTACLES, 125 V, 20 A: COMPLY W/ NEMA WD 1, NEMA WD 6 CONFIGURATION 5-20R, AND UL 498. PRODUCTS: SUBJECT TO COMPLIANCE W/ REQUIREMENTS, PROVIDE ONE OF THE FOLLOWING:

3. LEVITON; 16362-IGW.

4. ANY EQUAL BY ABOVE LISTED MANUFACTURERS.

DESCRIPTION: STRAIGHT BLADE; EQUIPMENT GROUNDING CONTACTS SHALL BE CONNECTED ONLY TO THE GREEN GROUNDING SCREW TERMINAL OF THE DEVICE AND W/ INHERENT ELECTRICAL ISOLATION FROM MOUNTING STRAP. ISOLATION SHALL BE INTERGRAL TO RECEPTACLE CONSTRUCTION AND NOT DEENDENT ON REMOVABLE PARTS.

E. GFCI RECEPTACLES
GENERAL DESCRIPTION: STRAIGHT BLADE, FEED-THROUGH TYPE. COMPLY W/ NEMA WD 1, NEMA WD 6, UL 498, AND UL 943, CLASS A, AND INCLUDE INICATOR LIGHT THAT IS LIGHTED WHEN DEVICE IS TRIPPED, DUPLEX GFCI CONVENIENCE RECEPTACLES, 125 V, 20 A: PRODUCTS: SUBJECT TO COMPLIANCE W/ REQUIREMENTS, PROVIDE ONE OF THE FOLLOWING:

1. LEVITON: 7899-W.

2. ANY EQUAL BY ABOVE LISTED MANUFACTURERS.

F. SNAP SWITCHES, COMPLY W/ NEMA WD 1 AND UL 20. SWITCHES, 120/277 V, 20 A: PRODUCTS: SUBJECT TO COMPLIANCE W/ REQUIREMENTS, PROVIDE ONE OF THE FOLLOWING:

1. LEVITON; 5621-2W (SINGLE POLE), 5622-2 (TWO POLE), 5623-2 (THREE WAY)

2. ANY EQUAL BY ABOVE LISTED MANUFACTURERS.

H. WALL-BOX DIMMERS, DIMMER SWITCHES: MODULAR, FULL-WAVE, SOLID-STATE UNITS W/ INTERGRAL, QUIET ON-OFF SWITCHES, W/ AUDIBLE FREQUENCY AND EMI/RFI SUPPRESION FILTERS, CONTROL: CONTINUOUSLY ADJUSTABLE SLIDER; W/ SINGLE-POLE OR THREE-WAY SWITCHING, COMPLY W/ UL 1472.

1. INCANESCENT LAMP DIMMERS: 120 V; CONTROL SHALL FOLLOW SQUARE-LAW DIMMING SHALL REQUIRE NO DERATING WHEN GANGED W/ OTHER DEVICES.

2. FLUORESCENT LAMP DIMMER SWITCHES: MODULAR; COMPATIBLE W/ DIMMER BALLASTS; TRIM POTENTIOMETER TO ADJUST LOW-END DIMMING; DIMMER-BALLAST COMBINATION CAPABLE OF CONSISTENT DIMMING W/ LOW END NOT GREATER THAN 20 PERCENT OF FULL BRIGHTNESS.

3. ACCEPTABLE MANUFACTURERS: LEVITON, LUTRON.

I. OCCUPANCY SENSORS, WALL-SWITCH SENSORS: SUBJECT TO COMPLIANCE W/ REQUIREMENTS, PROVIDE ONE OF THE FOLLOWING:

1. LEVITON; ODS15-IDW.

2. ANY EQUAL BY NOVITAS, WATTSTOPPER OR SENSOR SWITCH.

DESCRIPTION: PASSIVE-INFRARED TYPE, 120/277 V, ADJUSTABLE TIME DELAY UP TO 20 MINUTES, 180-DEGREE FIELD OF VIEW, W/ A MINIMUM CONVERAGE AREA OF 1800 SQ.FT. (167 SQ.M).

K. WALL PLATES, SINGLE AND COMBINATION TYPES TO MATCH CORRESPONDING WIRING DEVICES. PLATE-SECURING SCREW: METAL W/ HEAD COLOR TO MATCH PLATE FINISH.

1. MATERIAL FOR FINISHED SPACES: SMOOTH, HIGH-IMPACT THERMOPLASTIC 0.035-INCH-(1-MM) THICK.

2. MATERIAL FOR UNFINISHED SPACES: SMOOTH, HIGH-IMPACT THERMOPLASTIC.

3. MATERIAL FOR DAMP LOCATIONS: THERMOPLASTIC W/ SPRING-LOADED LIFT COVER, AND LISTED AND LABELED FOR USE IN "WET LOCATIONS."

4. WET-LOCATION, WEATHERPROOF COVER PLATES: NEMA 250, COMPLYING W/ TYPE 3R WEATHER-RESISTANT, THERMOPLASTIC W/ LOCKABLE COVER.

DEVICE MOUNTING HEIGHTS

IN GENERAL, UNLESS OTHERWISE NOTED ON THE ARCHITECTURAL DRAWINGS OR TH ELECTRICAL DRAWINGS, MOUNTING SHALL BE AS FOLLOWS: (HEIGHTS SHOWN ARE ABOVE FINISHED FLOOR TO CENTER LINE OF OUTLET).

WALL SWITCHES	48 INCHES
ELECTRICAL, VOICE/ DATA OUTLETS	18 INCHES
CLOCK OUTLETS	90 INCHES
RECEPTACLES (MOUNTED ABOVE A COUNTER)	42 INCHES
FIRE ALARM PULL STATIONS	42 INCHES
FIRE ALARM SYSTEM AUDIO/ VISUAL STROBES	80 INCHES
FIRE ALARM SYSTEM VISUAL STROBES	80 INCHES
WALL MOUNTED TELEPHONE	42 INCHES

COUNTY APPROVAL:
SIGNATURE ____________________________ DATE____________

GALVESTON COUNTY
BEACH PAVILION
CRYSTAL BEACH, TX 77650

BE-Arc LLC Project No : C-13-007.01

Ibis Engineering
REG # F-11156
P.O. Box 55171
Galveston, Texas 77555
PH 409.621.6740

THIS PRINT IS THE PROPERTY OF IBIS ENGINEERING IT MUST NOT BE TRACED OR REPRODUCED IN ANY MANNER NOR SHALL IT BE SUBMITTED WITHOUT PRIOR WRITTEN CONSENT FROM IBIS ENGINEERING.

BRAX EASTERWOOD
DESIGN
2728 AVENUE Q SUITE 2
GALVESTON TEXAS 77550
PHONE 409-354-8976
EASTERWOOD@BEAIA.COM

DESIGN REVIEW

DATE	REVISION

DESIGN DEVELOPMENT

DATE ISSUED:
9/28/2017

COPYRIGHT 2017

E3.1

COUNTY APPROVAL:
SIGNATURE _____ DATE_____

GALVESTON COUNTY BEACH PAVILION

CIVIL DRAWINGS
C0.01 GENERAL NOTES
C1.01 SITE PLAN
C1.02 WATER & SANITARY PLAN
C1.03 PAVING & DRAINAGE PLAN
C1.04 SWPPP PLAN
C2.01 PAVING DETAILS
C2.02 STORM SEWER DETAILS
C2.03 SWPPP DETAILS

ARCHITECTURAL DRAWINGS
G0.1 GENERAL NOTES
G0.2 CODE
G0.3 TAS/ADA
A0.1 SITE PLAN
A0.2 EXISTING CONTOURS
A1.1 LOWER LEVEL PLAN
A1.2 UPPER LEVEL PLAN
A1.3 ROOF PLAN AND DETAILS
A1.4 REFLECTED CEILING PLAN
A1.5 FLOORING/ PAVING PLAN
A2.1 EXTERIOR ELEVATIONS
A2.2 EXTERIOR ELEVATIONS
A2.3 EXT. ELEV. OF COURTYARD FACES
A2.4 EXT. ELEV. OF SCREEN WALL
A3.1 BUILDING SECTIONS
A3.2 BUILDING SECTIONS
A3.3 WALL SECTIONS
A3.4 WALL SECTIONS
A6.1 SCHEDULES
A6.2 WINDOW SCHEDULE
A7.1 INTERIOR ELEVATION OF GLAZED TILE
A7.2 ENLARGED - NORTH ELEVATION
A7.3 CASEWORK
A7.4 RESTROOM GATE DRAWINGS
A7.5 RESTROOM ELEVATIONS
A7.6 SHOWCASE DRAWINGS

STRUCTURAL DRAWINGS
S0.01 GENERAL NOTES
S0.02 GENERAL NOTES
S1.01 FOUNDATION STEM WALL / FOOTING PLAN
S1.02 FOUNDATION PLAN
S1.03 ENLARGED RAMP-STAIR FOUNDATION PLAN
S2.01 WALL LAYOUT
S3.01 ROOF FRAMING PLAN
S3.02 ROOF PLAN
S4.01 FOUNDATION DETAILS
S4.02 FOUNDATION DETAILS
S4.03 FOUNDATION DETAILS
S4.04 FOUNDATION DETAILS
S5.01 BLOCK WALL DETAILS
S5.02 FRAMING DETAILS
S5.03 FRAMING DETAILS

MECHANICAL DRAWINGS
M1.0 MAIN LEVEL MECHANICAL PLAN
M2.0 LEGEND AND NOTES
M3.0 MECHANICAL SPECIFICATIONS
M4.0 MECHANICAL DETAILS

PLUMBING DRAWINGS
P1.0 LOWER LEVEL SEWER PLAN
P.1.1 MAIN LEVEL SEWER PLAN
P1.2 LOWER LEVEL HOT & COLD WATER PLAN
P1.2 MAIN LEVEL HOT & COLD WATER PLAN
P2.0 PLUMBING FIXTURE SPECIFICATION
P2.1 PLUMBING FIXTURE SPECIFICATION
P2.2 SEWER AND WATER DIAGRAMS
P3.0 PLUMBING LEGEND, NOTES, & REQUIREMENTS
P4.0 PLUMBING SPECIFICATIONS
P5.0 PLUMBING DETAILS

ELECTRICAL DRAWINGS
E1.0 LOWER LEVEL POWER & LIGHTING PLAN
E1,1 MAIN LEVEL POWER PLAN
E1.2 MAIN LEVEL LIGHTING PLAN
E2.0 PANEL SCHEDULE & LOAD SUMMARY
E3.0 ELECTRICAL SPECIFICATIONS
E3.1 ELECTRICAL SPECIFICATIONS

GALVESTON COUNTY
BEACH PAVILION
CRYSTAL BEACH, TX 77650

BE–Arc LLC Project No : C–17–003.01

BRAX EASTERWOOD DESIGN
architecture + planning

BRAX EASTERWOOD
DESIGN
2728 AVENUE Q SUITE 2
GALVESTON TEXAS 77550
PHONE 409–354–8976
EASTERWOOD@BEAIA.COM

ARCHITECT # 19694

SEAL

DATE	REVISION

CONTRACT DOCUMENTS

DATE ISSUED:
12/12/2017

COPYRIGHT 2017

COUNTY APPROVAL:
SIGNATURE _____ DATE_____

GENERAL NOTES:

1. REFERENCE LINES AND GRADES

   A. THE OWNER SHALL PROVIDE REFERENCES FOR LINE AND GRADE. IT SHALL BE THE CONTRACTOR'S RESPONSIBILITY TO MAINTAIN THE REFERENCE POINTS AND REPLACE THEM IF LOST OR DAMAGED.

2. EXISTING UTILITIES

   A. VERIFY LOCATION AND ELEVATION OF EXISTING FACILITIES PRIOR TO CONSTRUCTION OF PROPOSED FACILITIES.
   B. PROTECT ALL EXISTING UTILITIES DURING CONSTRUCTION.
   C. THE TYPE, SIZE, LOCATION AND OWNERSHIP OF EXISTING UTILITIES HAVE BEEN OBTAINED FROM RECORD DRAWINGS FURNISHED BY THE OWNER. INFORMATION DERIVED FROM THESE SOURCES IS BELIEVED TO BE THE MOST RELIABLE AVAILABLE AND IS PROVIDED FOR THE CONTRACTOR'S INFORMATION ONLY. THE CONTRACTOR SHALL NOTIFY EACH PIPELINE OWNER AND VERIFY ITS ACTUAL FIELD LOCATION PRIOR TO EXCAVATION. NO WARRANTY IS GIVEN AS TO THE ACCURACY OR COMPLETENESS OF UTILITY LOCATION SHOWN ON THESE DRAWINGS.
   D. AT LEAST 30 DAYS PRIOR TO COMMENCING ANY EXCAVATING OR OTHER CONSTRUCTION ACTIVITY IN THE VICINITY OF THE UTILITY, NOTIFY THE TEXAS EXCAVATION SAFETY SYSTEM AT 1-800-DIG-TESS (344-8377).
   E. NO EXCAVATING OR OTHER CONSTRUCTION ACTIVITY SHALL BE CONDUCTED IN THE IMMEDIATE VICINITY OF A PIPELINE IN THE ABSENCE OF A PIPELINE REPRESENTATIVE. THE CONTRACTOR SHALL DETERMINE THE EXACT LOCATION BEFORE COMMENCING WORK, AND SHALL BE RESPONSIBLE FOR ANY DAMAGES CAUSED BY HIS FAILURE TO EXACTLY LOCATE AND PRESERVE THESE UNDERGROUND FACILITIES.
   F. OVERHEAD LINES MAY EXIST ON THE PROPERTY. THEY HAVE NOT BEEN MARKED SINCE THEY ARE CLEARLY VISIBLE. THE CONTRACTOR SHALL LOCATE THEM PRIOR TO BEGINNING ANY CONSTRUCTION. TEXAS LAW, SECTION 752, HEALTH AND SAFETY CODE, FORBIDS ALL ACTIVITIES IN WHICH PERSONS OR THINGS MAY COME WITHIN 6 FEET OF LIVE OVERHEAD HIGH VOLTAGE LINES. CONTRACTORS AND OWNERS ARE LEGALLY RESPONSIBLE FOR THE SAFETY OF CONSTRUCTION WORKERS UNDER THIS LAW. THIS LAW CARRIES BOTH CRIMINAL AND CIVIL LIABILITY.

3. EXISTING CONDITIONS:

   A. SPECIAL CARE SHALL BE TAKEN TO NOT DISTURB THE DRAINAGE.
   B. EXCESS EXCAVATED MATERIAL SHALL BE DISPOSED OF AS DIRECTED BY THE OWNER OR AS SPECIFIED ON THE DRAWINGS. SOIL SHALL NOT BE DEPOSITED GREATER THAN 4" DEEP WITHOUT PERMISSION FROM THE OWNER.

4. PERMITS:

   A. OWNER TO OBTAIN ALL PERMITS REQUIRED BY CITY, COUNTY, AND STATE AGENCIES PRIOR TO STARTING CONSTRUCTION OF UTILITY AND/OR CULVERTS WITHIN ROAD RIGHT-OF-WAYS.
   B. CONTRACTOR SHALL ASSURE HIMSELF THAT ALL CONSTRUCTION PERMITS HAVE BEEN OBTAINED PRIOR TO COMMENCEMENT OF WORK. REQUIRED PERMITS THAT CAN ONLY BE ISSUED TO CONTRACTOR SHALL BE OBTAINED AT HIS EXPENSE.

5. SAFETY:

   A. OBSERVE ALL FEDERAL, STATE, AND LOCAL SAFETY REGULATIONS WHEN WORKING IN OR NEAR PUBLIC ROAD RIGHT-OF-WAYS.
   B. CONTRACTOR SHALL COMPLY WITH OSHA REGULATIONS AND STATE OF TEXAS LAWS CONCERNING EXCAVATION, TRENCHING, AND SHORING.

DEFERRED SUBMITTALS:

1. DEFERRED SUBMITTALS IN ACCORDANCE WITH IBC 107.3.4.2 AND SHALL FIRST BE SUBMITTED TO THE PROJECT ARCHITECT AND/OR ENGINEER OF RECORD FOR REVIEW AND COORDINATION. FOLLOWING THE COMPLETION OF THE REVIEW AND COORDINATION BY THE ARCHITECT/ENGINEER OF RECORD; A SUBMITTAL MAY THEN BE MADE TO THE CITY BUILDING DEPARTMENT FOR REVIEW AND APPROVAL, WHICH SHALL INCLUDE A LETTER STATING THIS REVIEW AND COORDINATION HAS BEEN PERFORMED AND COMPLETED, AND PLANS AND CALCULATIONS FOR THE DEFERRED ITEMS ARE FOUND TO BE ACCEPTABLE WITH NO EXCEPTIONS.

2. THE LIST SHOULD CONTAIN BUT NOT NECESSARILY BE LIMITED TO THE FOLLOWING ITEMS:

   A. N/A

PAVING NOTES:

1. ALL MIXING, TRANSPORTATION, PLACING, AND CURING OF CONCRETE SHALL COMPLY WITH ACI 318-89.

2. REINFORCED CONCRETE PAVING SHALL CONSIST OF 6-INCH THICK CONCRETE SLAB WITH NO. 4 REBAR @ 15" C.C. EACH WAY. SUPPORT SLAB REINFORCEMENT WITH PLASTIC CHAIRS AT 24" O.C.E.W. MAXIMUM OR CONCRETE BRICKS AT 3'-0" O.C.E.W. MAXIMUM. ADDITIONAL CHAIR/SUPPORTS MAY BE REQUIRED AT DISCRETION OF ENGINEER.

3. SUBGRADE SHALL BE COMPACTED TO AT LEAST 95% OF THE STANDARD PROCTOR MAXIMUM DRY DENSITY (ASTM D698) WITH IN -1 TO +3% OF OPTIMUM MOISTURE CONTENT.

4. MINIMUM REINFORCEMENT LAP LENGTHS = 24 INCHES FOR (#4 REBAR).

5. CONCRETE SHALL HAVE 28-DAY STRENGTH OF 4,000 PSI MINIMUM WITH A 4-INCH TO 5-INCH SLUMP.

6. REINFORCEMENT: ASTM A615 GRADE 60 KSI MINIMUM.

7. EXPANSION JOINTS (EJ) SHALL BE PROVIDED EVERY 40 FEET MAXIMUM.

8. CONSTRUCTION JOINT (CJ) WITH METAL KEYWAY SHALL BE PROVIDED ON CENTERLINE OF ROAD (LONGITUDINALLY).

9. CONSTRUCTION JOINTS (CJ) WITH TOOLED JOINT OR METAL KEYWAY SHALL BE PROVIDED AT 20 FEET MAXIMUM SPACING ON CENTER (TRANSVERSLEY).

10. IF ALL THE SPLICES OCCUR AT THE SAME LONGITUDINAL LOCATION, TRANSVERSE CRACKS THAT OCCUR AT THE LOCATION COULD CAUSE STEEL BONDING FAILURE, RESULTING IN WIDE CRACKS AND PERFORMANCE PROBLEMS. TO MAKE SURE THAT ALL THE SPLICES DO NOT OCCUR AT THE SAME TRANSVERSE LOCATION, STAGGER SPLICES TO AVOID HAVING MORE THAN 1/3 OF THE SPLICES WITHIN A 2-FT. LONGITUDINAL LENGTH OF EACH LANE OF THE PAVEMENT. SEE PAVING DETAILS.

STORM SEWERS:

1. RCP PIPE:

   A. ALL STORM SEWERS SHALL BE CLASS III, TONGUE AND GROOVE RCP, OR APPROVED EQUAL.
   B. ALL JOINTS SHALL BE COMPLETELY SEALED WITH EVERGRIP 990 STRIPS OR APPROVED EQUAL.

2. HDPE PIPE:
   A. HDPE PIPE TO MEET AASHTO M 294 AND SHALL BE INSTALLED IN ACCORDING TO ASTM D 2321.
   B. COUPLING DEVICES SHALL PROVIDE A POSITIVE UNION OF ADJACENT PIPE SECTIONS WHILE EFFECTIVELY PREVENTING DISPLACEMENT OF THE PIPE ALONG ITS AXIS AND LATERAL DISPLACEMENT AT THE JOINT AND SHALL PROVIDE LEAK RESISTANT CONNECTIONS. COUPLINGS SHALL BE PROVIDED AND SUPPLIED BY THE SAME MANUFACTURER OF THE PIPE.

3. PRECAST CONCRETE MANHOLES

   A. PROVIDE MANHOLE SECTIONS, BASE SECTIONS, AND RELATED COMPONENTS CONFORMING TO ASTM C 478. PROVIDE BASE RISER SECTION WITH INTEGRAL FLOORS, UNLESS SHOWN OTHERWISE. PROVIDE ADJUSTMENT RINGS WHICH ARE STANDARD COMPONENTS OF THE MANUFACTURER OF THE MANHOLE SECTIONS.
   B. PROVIDE BARRELS CONSTRUCTED FROM 48-INCH-DIAMETER STANDARD REINFORCED CONCRETE MANHOLE SECTIONS UNLESS OTHERWISE INDICATED ON DRAWINGS. BASE SECTION SHALL HAVE A MINIMUM THICKNESS OF 12 INCHES UNDER THE INVERT.
   C. PROVIDE CONE TOPS TO RECEIVE CAST IRON FRAMES AND COVERS DESIGNED TO SUPPORT AN H-20 LOADING, UNLESS INDICATED OTHERWISE.
   D. WHERE THE DRAWINGS INDICATE THAT MANHOLES LARGER THAN 48-INCH DIAMETER ARE REQUIRED, PRECAST BASE SECTIONS OF THE REQUIRED DIAMETER SHALL BE PROVIDED WITH FLAT SLAB TOP PRECAST SECTIONS USED TO TRANSITION TO 48-INCH DIAMETER MANHOLE ACCESS RISER SECTIONS. TRANSITION CAN BE CONCENTRIC OR ECCENTRIC. THE TRANSITION SHALL BE LOCATED TO PROVIDE A MINIMUM OF 7-FOOT HEAD CLEARANCE FROM THE TOP OF BENCH TO UNDERSIDE OF TRANSITION.

4. PRECAST INLETS, HEADWALLS, AND WINGWALLS

   A. CONCRETE: PROVIDE CONCRETE FOR PRECAST MACHINE-MADE UNITS MEETING REQUIREMENTS OF ASTM C-76 REGARDING REINFORCED CONCRETE, CEMENT, AGGREGATE, MIXTURE, AND CONCRETE TEST. MINIMUM 28-DAY COMPRESSIVE STRENGTH SHALL BE 4,000 PSI.
   B. REINFORCING STEEL: PLACE REINFORCING STEEL TO CONFORM TO DETAILS SHOWN ON DRAWINGS AND SHALL PROVIDE A POSITIVE MEANS FOR HOLDING STEEL CAGES IN PLACE THROUGHOUT PRODUCTION OF CONCRETE UNITS. THE MAXIMUM VARIATION IN REINFORCEMENT POSITION IS PLUS OR MINUS 10 PERCENT OF WALL THICKNESS OR PLUS OR MINUS 1/2 INCH, WHICHEVER IS LESS. REGARDLESS OF VARIATION, THE MINIMUM COVER OF CONCRETE OVER REINFORCEMENT AS SHOWN ON THE DRAWINGS SHALL BE MAINTAINED. WELDING OF REINFORCING STEEL IS NOT PERMITTED UNLESS NOTED ON THE DRAWINGS.
   C. MORTAR: CONFORM TO REQUIREMENTS OF ASTM C 270 TYPE S USING PORTLAND CEMENT.
   D. MISCELLANEOUS METAL: SEE CASTINGS

5. CASTINGS

   A. CASTINGS FOR FRAMES, GRATES, RINGS AND COVERS SHALL CONFORM TO ASTM A-48, CLASS 30. PROVIDE LOCKING COVERS IF INDICATED ON DRAWINGS.
   B. CASTINGS SHALL BE CAPABLE OF WITHSTANDING THE APPLICATION OF AN AASHTO H-20 LOADING WITHOUT PERMANENT DEFORMATION.
   C. FABRICATE CASTINGS TO CONFORM TO THE SHAPES, DIMENSIONS, AND WITH WORDING OR LOGOS SHOWN ON THE DRAWINGS AS REQUIRED BY LOCAL MUNICIPALITY. STANDARD DIMENSIONS FOR MANHOLE COVERS ARE 32 INCHES IN DIAMETER.
   D. CASTINGS SHALL BE CLEAN, FREE FROM BLOWHOLES AND OTHER SURFACE IMPERFECTIONS. CAST HOLES IN COVERS SHALL BE CLEAN AND SYMMETRICAL, FREE OF PLUGS.

6. SPECIAL FRAMES AND COVERS

   A. WHERE INDICATED ON THE DRAWINGS, PROVIDE WATERTIGHT MANHOLE FRAMES AND COVERS WITH A MINIMUM OF FOUR BOLTS AND A GASKET DESIGNED TO SEAL COVER TO FRAME. SUPPLY WATERTIGHT MANHOLE COVERS AND FRAMES, PAMREX RE80 R8 FD OR APPROVAL EQUAL.

7. PRODUCT DELIVERY, STORAGE AND HANDLING

   A. COMPLY WITH MANUFACTURER'S RECOMMENDATIONS.
   B. HANDLE PIPE, FITTINGS, AND ACCESSORIES CAREFULLY WITH APPROVED HANDLING DEVICES. DO NOT DROP OR ROLL PIPE OFF TRUCKS OR TRAILERS. MATERIALS CRACKED, GOUGED, CHIPPED, DENTED, OR OTHERWISE DAMAGED WILL NOT BE APPROVED FOR INSTALLATION.
   C. STORE PIPE AND FITTINGS ON HEAVY TIMBERS OR PLATFORMS TO AVOID CONTACT WITH THE GROUND.
   D. UNLOAD PIPE, FITTINGS, AND SPECIALS AS CLOSE AS PRACTICAL TO THE LOCATION OF INSTALLATION TO AVOID UNNECESSARY HANDLING.
   E. KEEP INTERIORS OF PIPE AND FITTINGS COMPLETELY FREE OF DIRT AND FOREIGN MATTER.

8. BEDDING, BACKFILL, AND TOPSOIL MATERIAL:

   A. (BEDDING AND BACKFILL SHALL CONFORM TO CITY IPB FOR BEDDING AND BACKFILL OF UTILITIES) BEDDING SHALL BE CEMENT STABILIZED SAND (1-1/2 SACK/TON).
   B. BACKFILL SHALL BE CEMENT STABILIZED SAND (1-1/2 SACK/TON) WHEN EXCAVATION IS A DISTANCE OF 5 FEET OR LESS FROM EDGE OF PAVEMENT.
   C. FOR EXCAVATIONS GREATER THAN 5 FEET, NATIVE MATERIAL SHALL BE USED. TOPSOIL SHALL BE NATIVE MATERIAL UNLESS OTHERWISE SPECIFIED.
   D. STORM SEWER UNDER OR WITHIN ONE FOOT OF PROPOSED PAVEMENT SHALL BE BACK FILLED WITH CEMENT STABILIZED SAND.

9. PIPE INSTALLATION

   A. INSTALL IN ACCORDANCE WITH THE PIPE MANUFACTURER'S RECOMMENDATIONS AND AS SPECIFIED IN THIS SECTION.
   B. INSTALL PIPE ONLY AFTER EXCAVATION IS COMPLETED, THE BOTTOM OF THE TRENCH SHAPED, BEDDING MATERIAL IS INSTALLED, AND THE TRENCH HAS BEEN APPROVED BY THE ENGINEER.
   C. INSTALL PIPE TO THE LINE AND GRADE INDICATED. PLACE PIPE SO THAT IT HAS CONTINUOUS BEARING OF BARREL ON BEDDING MATERIAL AND IS LAID IN THE TRENCH SO THE INTERIOR SURFACES OF THE PIPE FOLLOW THE GRADES AND ALIGNMENTS INDICATED.
   D. INSTALL PIPE WITH THE SPIGOT ENDS TOWARD THE DIRECTION OF FLOW.
   E. FORM A CONCENTRIC JOINT WITH EACH SECTION OF ADJOINING PIPE SO AS TO PREVENT OFFSETS.
   F. KEEP THE INTERIOR OF PIPE CLEAN AS THE INSTALLATION PROGRESSES. WHERE CLEANING AFTER LAYING THE PIPE IS DIFFICULT BECAUSE OF SMALL PIPE SIZE, USE A SUITABLE SWAB OR DRAG IN THE PIPE AND PULL IT FORWARD PAST EACH JOINT IMMEDIATELY AFTER THE JOINT HAS BEEN COMPLETED.
   G. KEEP EXCAVATIONS FREE OF WATER DURING CONSTRUCTION AND UNTIL FINAL INSPECTION.
   H. WHEN WORK IS NOT IN PROGRESS, COVER THE EXPOSED ENDS OF PIPES WITH AN APPROVED PLUG TO PREVENT FOREIGN MATERIAL FROM ENTERING THE PIPE.

10. PIPE INSTALLATION OTHER THAN OPEN CUT

    A. ALL JOINTS FOR PIPE IN THE HOLE SHALL BE MADE UP PRIOR TO THE PIPE ENTERING THE BORE.
    B. BORED HOLE FOR ROAD CROSSING SHALL UTILIZE WATER ONLY FOR LUBRICATION. USE 2-INCH PILOT HOLE FOR ALIGNMENT AND GRADE. FOLLOW WITH MACHINE BORE OR MANDREL OF THE SIZE REQUIRED.
    C. BORED HOLE SHALL NOT BE MORE THAN 1-INCH GREATER THAN OUTSIDE DIAMETER OF THE PIPE BELL.
    D. ALL JOINTS FOR PIPE IN THE HOLE SHALL BE MADE UP PRIOR TO THE PIPE ENTERING THE BORE.
    E. CASING: STEEL CASING PIPE SHALL CONFORM TO ASTM A-53, STANDARD WALL THICKNESS, UNLESS OTHERWISE SHOWN ON DRAWINGS. JOINTS SHALL BE WELDED.

11. PIPE LEAKAGE TEST: VISUALLY INSPECT STORM SEWERS AND MANHOLES.

12. THE TOTAL FOOTAGE OF LINE SHALL BE INSPECTED WITH TELEVISION EQUIPMENT IN ACCORDANCE WITH THE CITY GENERAL DESIGN AND CONSTRUCTION STANDARDS AS CURRENTLY AMENDED.

13. BACKFILL AND SITE CLEANUP

    A. BACKFILL THE TRENCH ONLY AFTER PIPE INSTALLATION IS APPROVED BY THE CITY ENGINEER.
    B. IN UNPAVED AREAS, GRADE SURFACE AS A UNIFORM SLOPE TO NATURAL GRADE AS INDICATED ON THE DRAWINGS. PROVIDE A MINIMUM OF 4 INCHES OF TOPSOIL AND SEED ACCORDING FOR HYDROMULCH SEEDING. (SUBMIT SEEDING FOR APPROVAL).

GALVESTON COUNTY
BEACH PAVILION
CRYSTAL BEACH, TX 77650

Shelmark Project No : 17-217

SHELMARK ENGINEERING, L.L.C.
CIVIL | MARINE | PLANNING | STRUCTURAL
901 FM 517 ROAD EAST | DICKINSON, TEXAS 77539
TX FIRM NO. F-2113

STATE OF TEXAS
MARCUS J. MICHNA
84739
LICENSED
PROFESSIONAL ENGINEER
12-22-17

DATE	REVISION

CONSTRUCTION DOCUMENTS

DATE ISSUED:
12/22/2017

C0.01

GENERAL NOTES

GENERAL NOTES:

1. REFERENCE LINES AND GRADES

A. THE OWNER SHALL PROVIDE REFERENCES FOR LINE AND GRADE. IT SHALL BE THE CONTRACTOR'S RESPONSIBILITY TO MAINTAIN THE REFERENCE POINTS AND REPLACE THEM IF LOST OR DAMAGED.

2. EXISTING UTILITIES

A. VERIFY LOCATION AND ELEVATION OF EXISTING FACILITIES PRIOR TO CONSTRUCTION OF PROPOSED FACILITIES.
B. PROTECT ALL EXISTING UTILITIES DURING CONSTRUCTION.
C. THE TYPE, SIZE, LOCATION AND OWNERSHIP OF EXISTING UTILITIES HAVE BEEN OBTAINED FROM RECORD DRAWINGS FURNISHED BY THE OWNER. INFORMATION DERIVED FROM THESE SOURCES IS BELIEVED TO BE THE MOST RELIABLE AVAILABLE AND IS PROVIDED FOR THE CONTRACTOR'S INFORMATION ONLY. THE CONTRACTOR SHALL NOTIFY EACH PIPELINE OWNER AND VERIFY ITS ACTUAL FIELD LOCATION PRIOR TO EXCAVATION. NO WARRANTY IS GIVEN AS TO THE ACCURACY OR COMPLETENESS OF UTILITY LOCATION SHOWN ON THESE DRAWINGS.
D. AT LEAST 30 DAYS PRIOR TO COMMENCING ANY EXCAVATING OR OTHER CONSTRUCTION ACTIVITY IN THE VICINITY OF THE UTILITY, NOTIFY THE TEXAS EXCAVATION SAFETY SYSTEM AT 1-800-DIG-TESS (344-8377).
E. NO EXCAVATING OR OTHER CONSTRUCTION ACTIVITY SHALL BE CONDUCTED IN THE IMMEDIATE VICINITY OF A PIPELINE IN THE ABSENCE OF A PIPELINE REPRESENTATIVE. THE CONTRACTOR SHALL DETERMINE THE EXACT LOCATION BEFORE COMMENCING WORK, AND SHALL BE RESPONSIBLE FOR ANY DAMAGES CAUSED BY HIS FAILURE TO EXACTLY LOCATE AND PRESERVE THESE UNDERGROUND FACILITIES.

F. OVERHEAD LINES MAY EXIST ON THE PROPERTY. THEY HAVE NOT BEEN MARKED SINCE THEY ARE CLEARLY VISIBLE. THE CONTRACTOR SHALL LOCATE THEM PRIOR TO BEGINNING ANY CONSTRUCTION. TEXAS LAW, SECTION 752, HEALTH AND SAFETY CODE, FORBIDS ALL ACTIVITIES IN WHICH PERSONS OR THINGS MAY COME WITHIN 6 FEET OF LIVE OVERHEAD HIGH VOLTAGE LINES. CONTRACTORS AND OWNERS ARE LEGALLY RESPONSIBLE FOR THE SAFETY OF CONSTRUCTION WORKERS UNDER THIS LAW. THIS LAW CARRIES BOTH CRIMINAL AND CIVIL LIABILITY.

3. EXISTING CONDITIONS:

A. EXCESS EXCAVATED MATERIAL SHALL BE DISPOSED OF AS DIRECTED BY THE OWNER OR AS SPECIFIED ON THE DRAWINGS. SOIL SHALL NOT BE DEPOSITED GREATER THAN 4" DEEP WITHOUT PERMISSION FROM THE OWNER.

4. PERMITS:

A. OWNER TO OBTAIN ALL PERMITS REQUIRED BY CITY, COUNTY, AND STATE AGENCIES PRIOR TO STARTING CONSTRUCTION OF UTILITY AND/OR CULVERTS WITHIN ROAD RIGHT-OF-WAYS.
B. CONTRACTOR SHALL ASSURE HIMSELF THAT ALL CONSTRUCTION PERMITS HAVE BEEN OBTAINED PRIOR TO COMMENCEMENT OF WORK. REQUIRED PERMITS THAT CAN ONLY BE ISSUED TO CONTRACTOR SHALL BE OBTAINED AT HIS EXPENSE.

5. SAFETY:

A. OBSERVE ALL FEDERAL, STATE, AND LOCAL SAFETY REGULATIONS WHEN WORKING IN OR NEAR PUBLIC ROAD RIGHT-OF-WAYS.
B. CONTRACTOR SHALL COMPLY WITH OSHA REGULATIONS AND STATE OF TEXAS LAWS CONCERNING EXCAVATION, TRENCHING, AND SHORING.

THE AREA OF THIS SURVEY IS IN FIRM 485470 0124E MAP REVISED JULY 5, 1993, ZONE A15 BFE 15.

SURVEYOR NOTES:
1) THIS PROPERTY DOES LIE WITHIN THE 100 YEAR FLOOD PLAIN AS ESTABLISHED BY THE FEDERAL EMERGENCY MANAGEMENT AGENCY.
2) THIS PROPERTY IS SUBJECT TO ANY RESTRICTIONS OF RECORD AND MAY BE SUBJECT TO SETBACKS FROM POWER LINES AS ESTABLISHED BY OSHA (CALL YOUR POWER COMPANY).
3) GRID BEARINGS BASED ON MONUMENTATION OF WEST R.O.W. LINE OF NOBLE CARL DRIVE.
4) ELEVATIONS ARE SHOWN IN FEET ABOVE MEAN SEA LEVEL NAVD '88 DATUM AS TIED TO NGS MONUMENT HGCSD 64.
5) SURVEYED WITHOUT BENEFIT OF A TITLE REPORT.

LEGEND

B-1 SOIL BORINGS

NO CONSTRUCTION WORKERS SHALL PARK VEHICLES TO BLOCK FIRE STATION/EMS INGRESS/EGRESS

COUNTY APPROVAL:
SIGNATURE _____ DATE _____

60 0 60 120 180 Feet
SCALE: 1"=60'

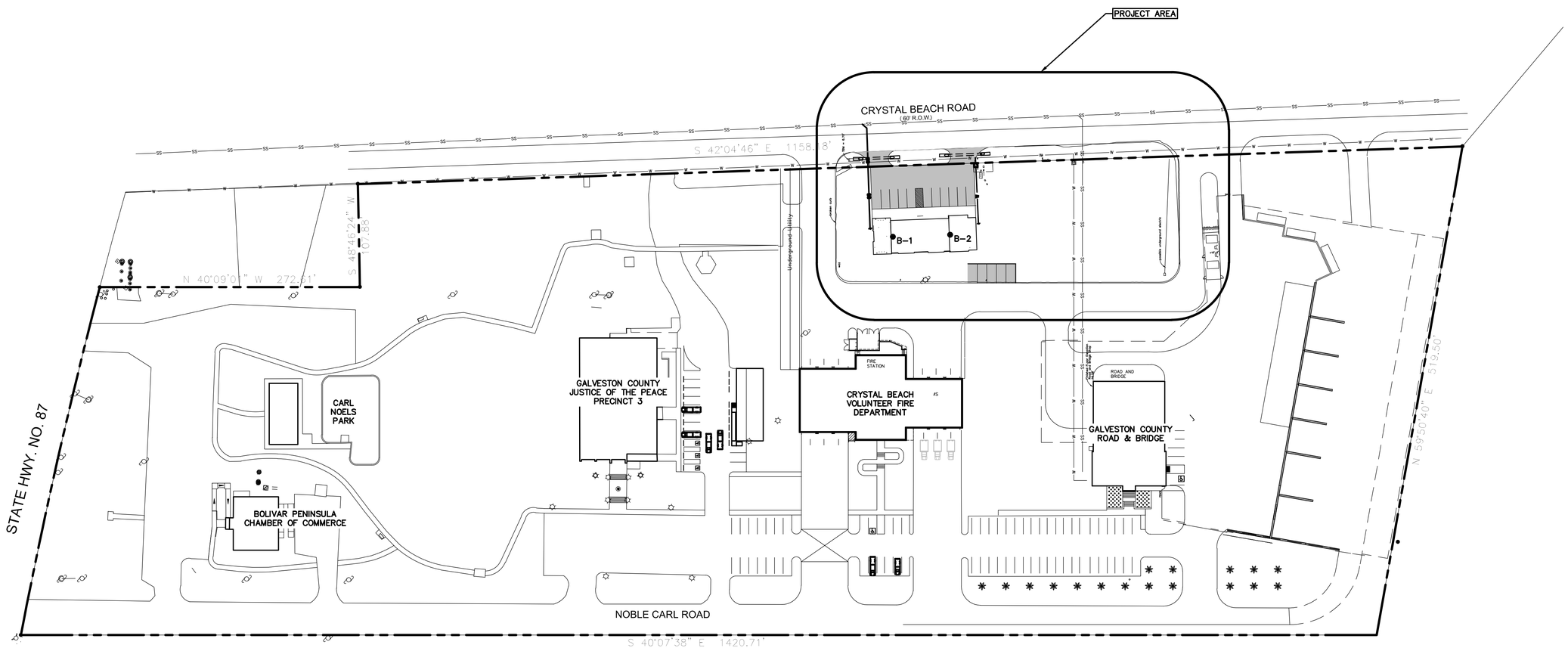

GALVESTON COUNTY BEACH PAVILION CRYSTAL BEACH, TX 77650

Shelmark Project No : 17-217

SHELMARK ENGINEERING, L.L.C.
CIVIL | MARINE | PLANNING | STRUCTURAL
501 FM 517 ROAD EAST | DICKINSON, TEXAS 77539
TX FIRM NO. F-2113

STATE OF TEXAS
MARCUS J. MICHNA
84739
LICENSED PROFESSIONAL ENGINEER
12-22-2017

DATE	REVISION

CONSTRUCTION DOCUMENTS

DATE ISSUED:
12/22/2017

C1.01

SITE PLAN

GENERAL NOTES:

1. REFERENCE LINES AND GRADES

A. THE OWNER SHALL PROVIDE REFERENCES FOR LINE AND GRADE. IT SHALL BE THE CONTRACTOR'S RESPONSIBILITY TO MAINTAIN THE REFERENCE POINTS AND REPLACE THEM IF LOST OR DAMAGED.

2. EXISTING UTILITIES

A. VERIFY LOCATION AND ELEVATION OF EXISTING FACILITIES PRIOR TO CONSTRUCTION OF PROPOSED FACILITIES.
B. PROTECT ALL EXISTING UTILITIES DURING CONSTRUCTION.
C. THE TYPE, SIZE, LOCATION AND OWNERSHIP OF EXISTING UTILITIES HAVE BEEN OBTAINED FROM RECORD DRAWINGS FURNISHED BY THE OWNER. INFORMATION DERIVED FROM THESE SOURCES IS BELIEVED TO BE THE MOST RELIABLE AVAILABLE AND IS PROVIDED FOR THE CONTRACTOR'S INFORMATION ONLY. THE CONTRACTOR SHALL NOTIFY EACH PIPELINE OWNER AND VERIFY ITS ACTUAL FIELD LOCATION PRIOR TO EXCAVATION. NO WARRANTY IS GIVEN AS TO THE ACCURACY OR COMPLETENESS OF UTILITY LOCATION SHOWN ON THESE DRAWINGS.
D. AT LEAST 30 DAYS PRIOR TO COMMENCING ANY EXCAVATING OR OTHER CONSTRUCTION ACTIVITY IN THE VICINITY OF THE UTILITY, NOTIFY THE TEXAS EXCAVATION SAFETY SYSTEM AT 1-800-DIG-TESS (344-8377).
E. NO EXCAVATING OR OTHER CONSTRUCTION ACTIVITY SHALL BE CONDUCTED IN THE IMMEDIATE VICINITY OF A PIPELINE IN THE ABSENCE OF A PIPELINE REPRESENTATIVE. THE CONTRACTOR SHALL DETERMINE THE EXACT LOCATION BEFORE COMMENCING WORK, AND SHALL BE RESPONSIBLE FOR ANY DAMAGES CAUSED BY HIS FAILURE TO EXACTLY LOCATE AND PRESERVE THESE UNDERGROUND FACILITIES.

F. OVERHEAD LINES MAY EXIST ON THE PROPERTY. THEY HAVE NOT BEEN MARKED SINCE THEY ARE CLEARLY VISIBLE. THE CONTRACTOR SHALL LOCATE THEM PRIOR TO BEGINNING ANY CONSTRUCTION. TEXAS LAW, SECTION 752, HEALTH AND SAFETY CODE, FORBIDS ALL ACTIVITIES IN WHICH PERSONS OR THINGS MAY COME WITHIN 6 FEET OF LIVE OVERHEAD HIGH VOLTAGE LINES. CONTRACTORS AND OWNERS ARE LEGALLY RESPONSIBLE FOR THE SAFETY OF CONSTRUCTION WORKERS UNDER THIS LAW. THIS LAW CARRIES BOTH CRIMINAL AND CIVIL LIABILITY.

3. EXISTING CONDITIONS:

A. EXCESS EXCAVATED MATERIAL SHALL BE DISPOSED OF AS DIRECTED BY THE OWNER OR AS SPECIFIED ON THE DRAWINGS. SOIL SHALL NOT BE DEPOSITED GREATER THAN 4" DEEP WITHOUT PERMISSION FROM THE OWNER.

4. PERMITS:

A. OWNER TO OBTAIN ALL PERMITS REQUIRED BY CITY, COUNTY, AND STATE AGENCIES PRIOR TO STARTING CONSTRUCTION OF UTILITY AND/OR CULVERTS WITHIN ROAD RIGHT-OF-WAYS.
B. CONTRACTOR SHALL ASSURE HIMSELF THAT ALL CONSTRUCTION PERMITS HAVE BEEN OBTAINED PRIOR TO COMMENCEMENT OF WORK. REQUIRED PERMITS THAT CAN ONLY BE ISSUED TO CONTRACTOR SHALL BE OBTAINED AT HIS EXPENSE.

5. SAFETY:

A. OBSERVE ALL FEDERAL, STATE, AND LOCAL SAFETY REGULATIONS WHEN WORKING IN OR NEAR PUBLIC ROAD RIGHT-OF-WAYS.
B. CONTRACTOR SHALL COMPLY WITH OSHA REGULATIONS AND STATE OF TEXAS LAWS CONCERNING EXCAVATION, TRENCHING, AND SHORING.

THE AREA OF THIS SURVEY IS IN FIRM 485470 0124E MAP REVISED JULY 5, 1993, ZONE A15 BFE 15.

SURVEYOR NOTES:
1) THIS PROPERTY DOES LIE WITHIN THE 100 YEAR FLOOD PLAIN AS ESTABLISHED BY THE FEDERAL EMERGENCY MANAGEMENT AGENCY.
2) THIS PROPERTY IS SUBJECT TO ANY RESTRICTIONS OF RECORD AND MAY BE SUBJECT TO SETBACKS FROM POWER LINES AS ESTABLISHED BY OSHA (CALL YOUR POWER COMPANY).
3) GRID BEARINGS BASED ON MONUMENTATION OF WEST R.O.W. LINE OF NOBLE CARL DRIVE.
4) ELEVATIONS ARE SHOWN IN FEET ABOVE MEAN SEA LEVEL NAVD '88 DATUM AS TIED TO NGS MONUMENT HGCSD 64.
5) SURVEYED WITHOUT BENEFIT OF A TITLE REPORT.

WATER & SANITARY SEWER PLAN LEGEND

M	PROPOSED WATER METER BOX
SS	EXISTING SANITARY SEWER LINE
	PROPOSED SANITARY SEWER LINE
W	EXISTING WATER LINE
	PROPOSED WATER LINE

NOTES:
1) COORDINATE PERMITS & PAYMENT OF SANITARY SEWER GRINDER PUMP & FORCE MAIN EXTENSION WITH BOLIVAR UTILITIES SERVICES (B.U.S.) AT 409-684-9941.
2) COORDINATE WATER METER INSTALLATION & FEES WITH BOLIVAR PENINSULA SPECIAL UTILITY DISTRICT (BPSUD) AT 409-684-3515.
3) ENDS OF CONDUITS FOR FUTURE UTILITIES SHALL BE TEMPORARY PLUGGED AND MARKED WITH 2x4 STAKES U.O.N.

COUNTY APPROVAL:
SIGNATURE _____ DATE _____

20 0 20 40 60 Feet
SCALE: 1"=20'

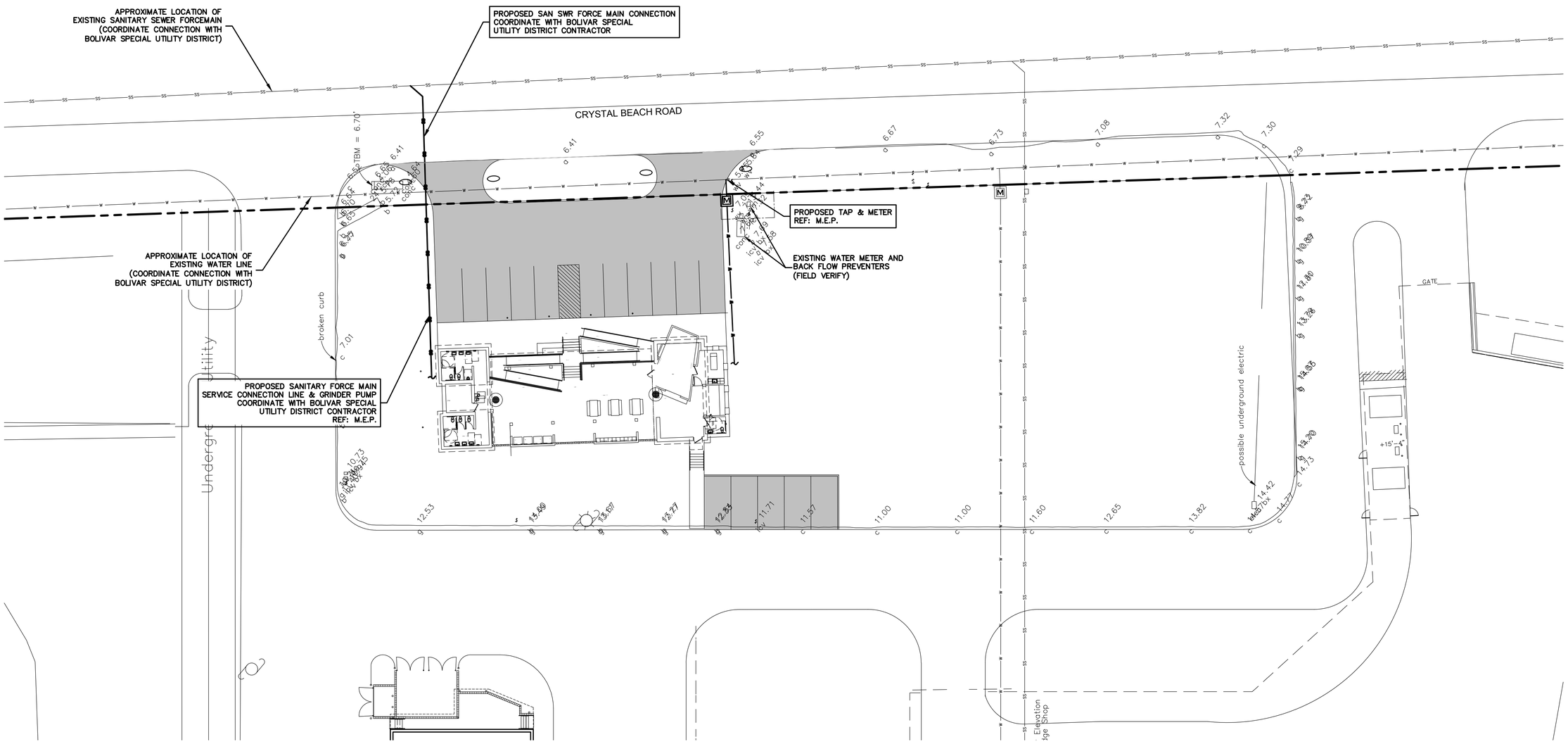

GALVESTON COUNTY
BEACH PAVILION
CRYSTAL BEACH, TX 77650

Shelmark Project No : 17-217

SHELMARK ENGINEERING, L.L.C.
CIVIL | MARINE | PLANNING | STRUCTURAL
501 FM 517 ROAD EAST | DICKINSON, TEXAS 77539
TE FIRM NO. F-2113

STATE OF TEXAS
MARCUS J. MICHNA
84739
LICENSED PROFESSIONAL ENGINEER
12-22-2017

DATE	REVISION

CONSTRUCTION DOCUMENTS

DATE ISSUED:
12/22/2017

C1.02

WATER & SANITARY PLAN

GENERAL NOTES:

1. REFERENCE LINES AND GRADES

A. THE OWNER SHALL PROVIDE REFERENCES FOR LINE AND GRADE. IT SHALL BE THE CONTRACTOR'S RESPONSIBILITY TO MAINTAIN THE REFERENCE POINTS AND REPLACE THEM IF LOST OR DAMAGED.

2. EXISTING UTILITIES

A. VERIFY LOCATION AND ELEVATION OF EXISTING FACILITIES PRIOR TO CONSTRUCTION OF PROPOSED FACILITIES.
B. PROTECT ALL EXISTING UTILITIES DURING CONSTRUCTION.
C. THE TYPE, SIZE, LOCATION AND OWNERSHIP OF EXISTING UTILITIES HAVE BEEN OBTAINED FROM RECORD DRAWINGS FURNISHED BY THE OWNER. INFORMATION DERIVED FROM THESE SOURCES IS BELIEVED TO BE THE MOST RELIABLE AVAILABLE AND IS PROVIDED FOR THE CONTRACTOR'S INFORMATION ONLY. THE CONTRACTOR SHALL NOTIFY EACH PIPELINE OWNER AND VERIFY ITS ACTUAL FIELD LOCATION PRIOR TO EXCAVATION. NO WARRANTY IS GIVEN AS TO THE ACCURACY OR COMPLETENESS OF UTILITY LOCATION SHOWN ON THESE DRAWINGS.
D. AT LEAST 30 DAYS PRIOR TO COMMENCING ANY EXCAVATING OR OTHER CONSTRUCTION ACTIVITY IN THE VICINITY OF THE UTILITY, NOTIFY THE TEXAS EXCAVATION SAFETY SYSTEM AT 1-800-DIG-TESS (344-8377).
E. NO EXCAVATING OR OTHER CONSTRUCTION ACTIVITY SHALL BE CONDUCTED IN THE IMMEDIATE VICINITY OF A PIPELINE IN THE ABSENCE OF A PIPELINE REPRESENTATIVE. THE CONTRACTOR SHALL DETERMINE THE EXACT LOCATION BEFORE COMMENCING WORK, AND SHALL BE RESPONSIBLE FOR ANY DAMAGES CAUSED BY HIS FAILURE TO EXACTLY LOCATE AND PRESERVE THESE UNDERGROUND FACILITIES.

F. OVERHEAD LINES MAY EXIST ON THE PROPERTY. THEY HAVE NOT BEEN MARKED SINCE THEY ARE CLEARLY VISIBLE. THE CONTRACTOR SHALL LOCATE THEM PRIOR TO BEGINNING ANY CONSTRUCTION. TEXAS LAW, SECTION 752, HEALTH AND SAFETY CODE, FORBIDS ALL ACTIVITIES IN WHICH PERSONS OR THINGS MAY COME WITHIN 6 FEET OF LIVE OVERHEAD HIGH VOLTAGE LINES. CONTRACTORS AND OWNERS ARE LEGALLY RESPONSIBLE FOR THE SAFETY OF CONSTRUCTION WORKERS UNDER THIS LAW. THIS LAW CARRIES BOTH CRIMINAL AND CIVIL LIABILITY.

3. EXISTING CONDITIONS:

A. EXCESS EXCAVATED MATERIAL SHALL BE DISPOSED OF AS DIRECTED BY THE OWNER OR AS SPECIFIED ON THE DRAWINGS. SOIL SHALL NOT BE DEPOSITED GREATER THAN 4" DEEP WITHOUT PERMISSION FROM THE OWNER.

4. PERMITS:

A. OWNER TO OBTAIN ALL PERMITS REQUIRED BY CITY, COUNTY, AND STATE AGENCIES PRIOR TO STARTING CONSTRUCTION OF UTILITY AND/OR CULVERTS WITHIN ROAD RIGHT-OF-WAYS.
B. CONTRACTOR SHALL ASSURE HIMSELF THAT ALL CONSTRUCTION PERMITS HAVE BEEN OBTAINED PRIOR TO COMMENCEMENT OF WORK. REQUIRED PERMITS THAT CAN ONLY BE ISSUED TO CONTRACTOR SHALL BE OBTAINED AT HIS EXPENSE.

5. SAFETY:

A. OBSERVE ALL FEDERAL, STATE, AND LOCAL SAFETY REGULATIONS WHEN WORKING IN OR NEAR PUBLIC ROAD RIGHT-OF-WAYS.
B. CONTRACTOR SHALL COMPLY WITH OSHA REGULATIONS AND STATE OF TEXAS LAWS CONCERNING EXCAVATION, TRENCHING, AND SHORING.

THE AREA OF THIS SURVEY IS IN FIRM 485470 0124E MAP REVISED JULY 5, 1993, ZONE A15 BFE 15.

SURVEYOR NOTES:
1) THIS PROPERTY DOES LIE WITHIN THE 100 YEAR FLOOD PLAIN AS ESTABLISHED BY THE FEDERAL EMERGENCY MANAGEMENT AGENCY.
2) THIS PROPERTY IS SUBJECT TO ANY RESTRICTIONS OF RECORD AND MAY BE SUBJECT TO SETBACKS FROM POWER LINES AS ESTABLISHED BY OSHA (CALL YOUR POWER COMPANY).
3) GRID BEARINGS BASED ON MONUMENTATION OF WEST R.O.W. LINE OF NOBLE CARL DRIVE.
4) ELEVATIONS ARE SHOWN IN FEET ABOVE MEAN SEA LEVEL NAVD '88 DATUM AS TIED TO NGS MONUMENT HGCSD 64.
5) SURVEYED WITHOUT BENEFIT OF A TITLE REPORT.

PAVING LEGEND

FF	FINISHED FLOOR
FG	FINISHED GRADE
TP	TOP OF PAVEMENT
TC	TOP OF CURB
TG	TOP OF GRATE
G	GUTTER
1.0%	PAVEMENT SLOPE
	PROPOSED 6" CONCRETE PAVING 748 SY
	EXISTING FLOW ARROW
	PROPOSED FLOW ARROW
6	PROPOSED CONTOURS
6	EXISTING CONTOURS

COUNTY APPROVAL:
SIGNATURE _____ DATE _____

20 0 20 40 60 Feet
SCALE: 1"=20'

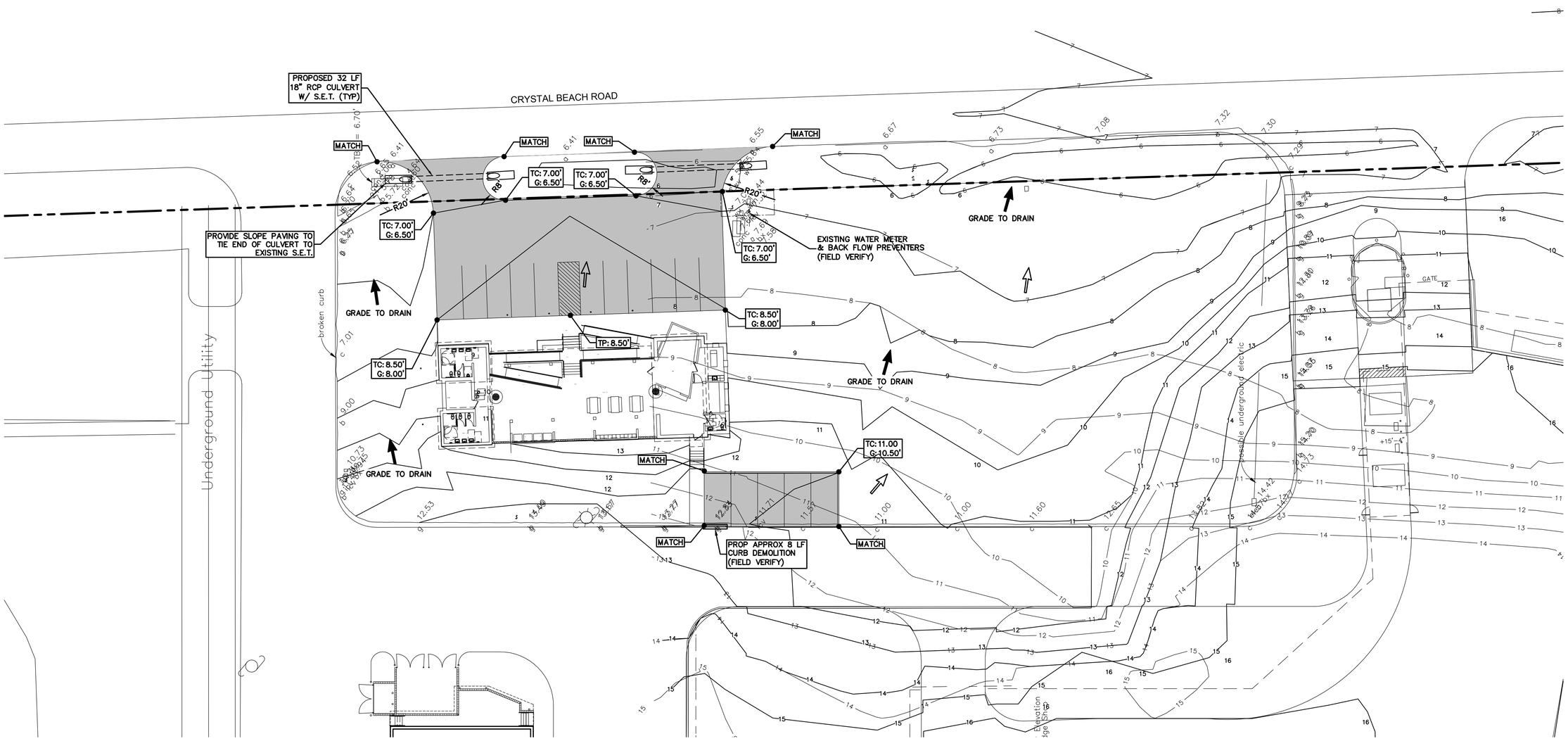

GALVESTON COUNTY BEACH PAVILION CRYSTAL BEACH, TX 77650

Shelmark Project No : 17-217

SHELMARK ENGINEERING, L.L.C.
CIVIL | MARINE | PLANNING | STRUCTURAL
501 FM 517 ROAD EAST | DICKINSON, TEXAS 77539
TE FIRM NO. F-2113

STATE OF TEXAS
MARCUS J. MICHNA
84739
LICENSED PROFESSIONAL ENGINEER
12-22-2017

DATE	REVISION

CONSTRUCTION DOCUMENTS

DATE ISSUED:
12/22/2017

C1.03

PAVING & DRAINAGE PLAN

GENERAL NOTES:

1. REFERENCE LINES AND GRADES

A. THE OWNER SHALL PROVIDE REFERENCES FOR LINE AND GRADE. IT SHALL BE THE CONTRACTOR'S RESPONSIBILITY TO MAINTAIN THE REFERENCE POINTS AND REPLACE THEM IF LOST OR DAMAGED.

2. EXISTING UTILITIES

A. VERIFY LOCATION AND ELEVATION OF EXISTING FACILITIES PRIOR TO CONSTRUCTION OF PROPOSED FACILITIES.
B. PROTECT ALL EXISTING UTILITIES DURING CONSTRUCTION.
C. THE TYPE, SIZE, LOCATION AND OWNERSHIP OF EXISTING UTILITIES HAVE BEEN OBTAINED FROM RECORD DRAWINGS FURNISHED BY THE OWNER. INFORMATION DERIVED FROM THESE SOURCES IS BELIEVED TO BE THE MOST RELIABLE AVAILABLE AND IS PROVIDED FOR THE CONTRACTOR'S INFORMATION ONLY. THE CONTRACTOR SHALL NOTIFY EACH PIPELINE OWNER AND VERIFY ITS ACTUAL FIELD LOCATION PRIOR TO EXCAVATION. NO WARRANTY IS GIVEN AS TO THE ACCURACY OR COMPLETENESS OF UTILITY LOCATION SHOWN ON THESE DRAWINGS.
D. AT LEAST 30 DAYS PRIOR TO COMMENCING ANY EXCAVATING OR OTHER CONSTRUCTION ACTIVITY IN THE VICINITY OF THE UTILITY, NOTIFY THE TEXAS EXCAVATION SAFETY SYSTEM AT 1-800-DIG-TESS (344-8377).
E. NO EXCAVATING OR OTHER CONSTRUCTION ACTIVITY SHALL BE CONDUCTED IN THE IMMEDIATE VICINITY OF A PIPELINE IN THE ABSENCE OF A PIPELINE REPRESENTATIVE. THE CONTRACTOR SHALL DETERMINE THE EXACT LOCATION BEFORE COMMENCING WORK, AND SHALL BE RESPONSIBLE FOR ANY DAMAGES CAUSED BY HIS FAILURE TO EXACTLY LOCATE AND PRESERVE THESE UNDERGROUND FACILITIES.

F. OVERHEAD LINES MAY EXIST ON THE PROPERTY. THEY HAVE NOT BEEN MARKED SINCE THEY ARE CLEARLY VISIBLE. THE CONTRACTOR SHALL LOCATE THEM PRIOR TO BEGINNING ANY CONSTRUCTION. TEXAS LAW, SECTION 752, HEALTH AND SAFETY CODE, FORBIDS ALL ACTIVITIES IN WHICH PERSONS OR THINGS MAY COME WITHIN 6 FEET OF LIVE OVERHEAD HIGH VOLTAGE LINES. CONTRACTORS AND OWNERS ARE LEGALLY RESPONSIBLE FOR THE SAFETY OF CONSTRUCTION WORKERS UNDER THIS LAW. THIS LAW CARRIES BOTH CRIMINAL AND CIVIL LIABILITY.

3. EXISTING CONDITIONS:

A. EXCESS EXCAVATED MATERIAL SHALL BE DISPOSED OF AS DIRECTED BY THE OWNER OR AS SPECIFIED ON THE DRAWINGS. SOIL SHALL NOT BE DEPOSITED GREATER THAN 4" DEEP WITHOUT PERMISSION FROM THE OWNER.

4. PERMITS:

A. OWNER TO OBTAIN ALL PERMITS REQUIRED BY CITY, COUNTY, AND STATE AGENCIES PRIOR TO STARTING CONSTRUCTION OF UTILITY AND/OR CULVERTS WITHIN ROAD RIGHT-OF-WAYS.
B. CONTRACTOR SHALL ASSURE HIMSELF THAT ALL CONSTRUCTION PERMITS HAVE BEEN OBTAINED PRIOR TO COMMENCEMENT OF WORK. REQUIRED PERMITS THAT CAN ONLY BE ISSUED TO CONTRACTOR SHALL BE OBTAINED AT HIS EXPENSE.

5. SAFETY:

A. OBSERVE ALL FEDERAL, STATE, AND LOCAL SAFETY REGULATIONS WHEN WORKING IN OR NEAR PUBLIC ROAD RIGHT-OF-WAYS.
B. CONTRACTOR SHALL COMPLY WITH OSHA REGULATIONS AND STATE OF TEXAS LAWS CONCERNING EXCAVATION, TRENCHING, AND SHORING.

THE AREA OF THIS SURVEY IS IN FIRM 485470 0124E MAP REVISED JULY 5, 1993, ZONE A15 BFE 15.

SURVEYOR NOTES:
1) THIS PROPERTY DOES LIE WITHIN THE 100 YEAR FLOOD PLAIN AS ESTABLISHED BY THE FEDERAL EMERGENCY MANAGEMENT AGENCY.
2) THIS PROPERTY IS SUBJECT TO ANY RESTRICTIONS OF RECORD AND MAY BE SUBJECT TO SETBACKS FROM POWER LINES AS ESTABLISHED BY OSHA (CALL YOUR POWER COMPANY).
3) GRID BEARINGS BASED ON MONUMENTATION OF WEST R.O.W. LINE OF NOBLE CARL DRIVE.
4) ELEVATIONS ARE SHOWN IN FEET ABOVE MEAN SEA LEVEL NAVD '88 DATUM AS TIED TO NGS MONUMENT HGCSD 64.
5) SURVEYED WITHOUT BENEFIT OF A TITLE REPORT.

SWPPP LEGEND

RFB — REINFORCED FILTER FABRIC FENCE

CTW — CONCRETE TRUCK WASH

COUNTY APPROVAL:
SIGNATURE _____ DATE _____

20 0 20 40 60 Feet
SCALE: 1"=20'

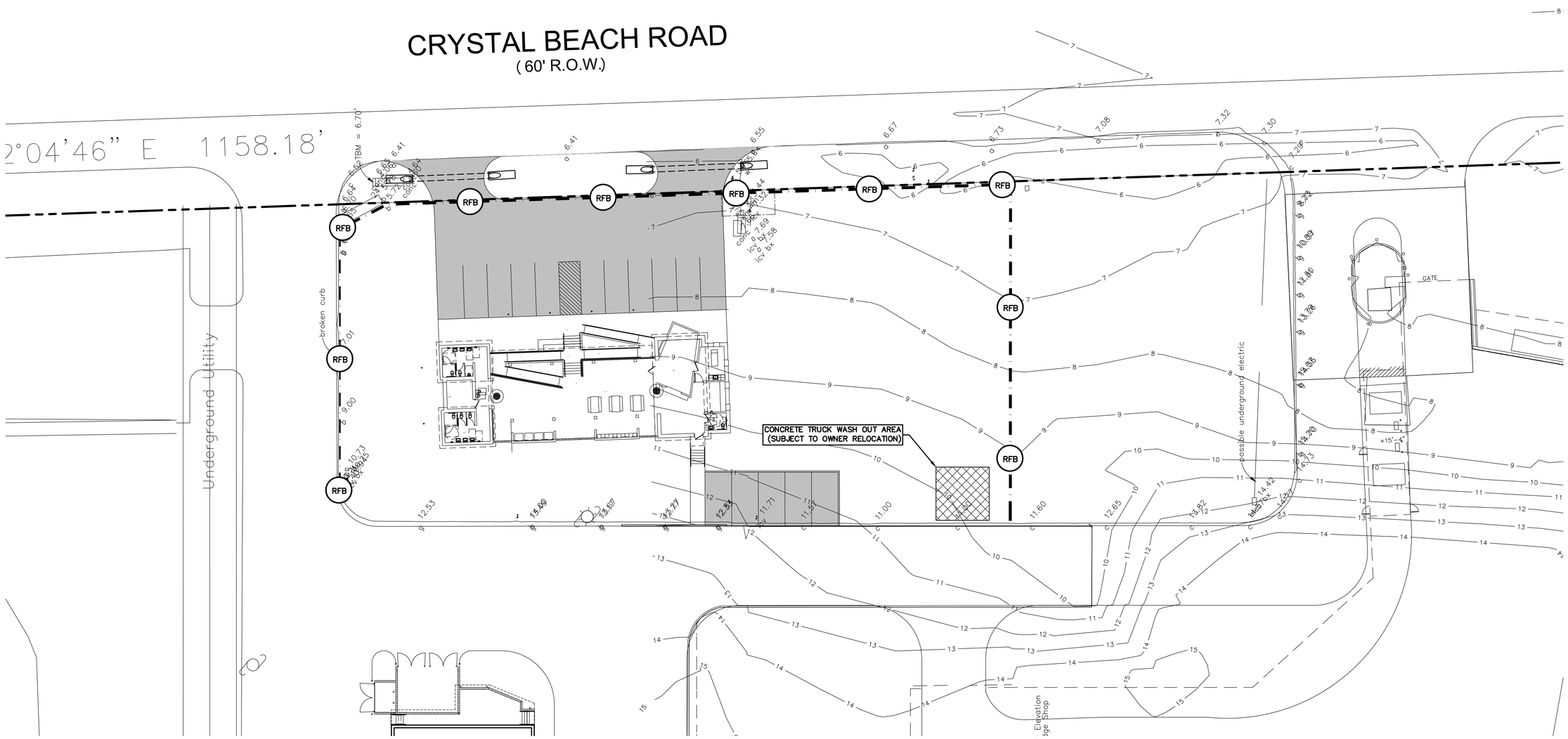

GALVESTON COUNTY
BEACH PAVILION
CRYSTAL BEACH, TX 77650

Shelmark Project No : 17-217

SHELMARK ENGINEERING, L.L.C.
CIVIL | MARINE | PLANNING | STRUCTURAL
501 FM 517 ROAD EAST | DICKINSON, TEXAS 77539
TX FIRM NO. F-2113

STATE OF TEXAS
MARCUS J. MICHNA
84739
LICENSED
PROFESSIONAL ENGINEER
12-22-2017

DATE	REVISION

CONSTRUCTION DOCUMENTS

DATE ISSUED:
12/22/2017

C1.04

SWPP PLAN

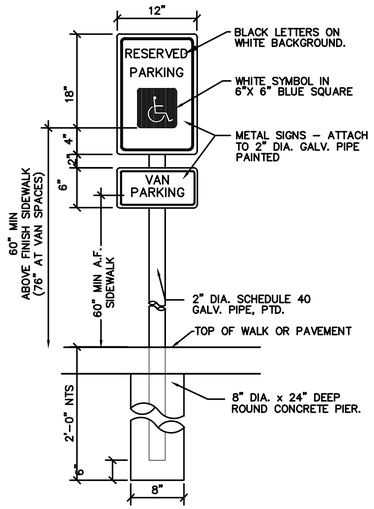

ADA SIGN (1)

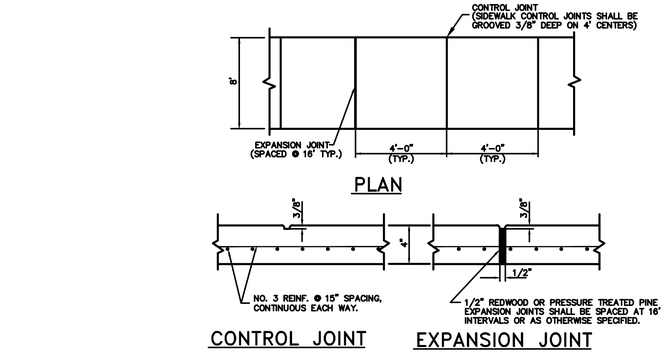

NOTES:
1. ALL EDGES SHALL BE ROUNDED WITH 3/8" RADIUS.
2. CONTROL JOINTS SHALL BE SPACED AT 4'-0" INTERVALS.
3. CONTROL JOINTS SHALL BE 3/8" DEEP AND TROWEL EDGE.
4. 1/2" EXPANSION MATERIAL REQUIRED WHERE SIDEWALKS ABUT BUILDINGS, CURBS, DRIVEWAYS, OR EXISTING SIDEWALKS.
5. EXPANSION JOINTS SHALL BE SPACED AT 16 FT. INTERVALS TYPICALLY.
6. WHERE NEW SIDEWALK IS PLACED AGAINST EXISTING SIDEWALK, SAWCUT EXISTING SIDEWALK TO AN EVEN STRAIGHT LINE PRIOR TO INSTALLATION

SIDEWALK (2)

COUNTY APPROVAL:
SIGNATURE _____ DATE_____

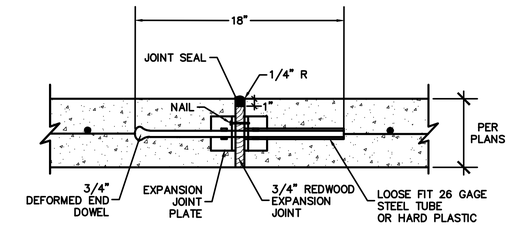

NOTE:
1. DOWELS FOR PAVEMENT EXPANSION SHALL BE 3/4" ø FOR 6" TO LESS THAN 7" PAVEMENT THICKNESS. 1" ø FOR 7" TO LESS THAN 9" PAVEMENT THICKNESS. 1 1/4 ø FOR 9" OR GREATER PAVEMENT THICKNESS.
2. EXPANSION JOINT SHALL BE PLACED AT THE END OF EACH CURB RETURN AND AT MAXIMUM 80' SPACING.
3. ALL JOINT SEAL MATERIAL SHALL BE ASPHALT RUBBER ACCORDANCE WITH ASTM DESIGNATION D3405.
4. IF DEFORMED METAL STRIPS ARE ALLOWED, THEY SHALL BE STAKED IN PLACE WITH #3 BARS.
5. PRE-MANUFACTURED JOINT PLATE.

EXPANSION JOINT (3)

NOTE:
HANDICAPPED PARKING SPACES AND ACCESS AISLES SHALL BE LEVEL WITH SURFACE SLOPES NOT EXCEEDING 1:50 (2%) IN ALL DIRECTIONS.

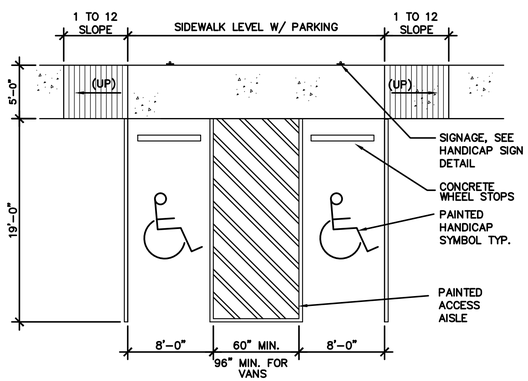

ADA PARKING SPACE (4)

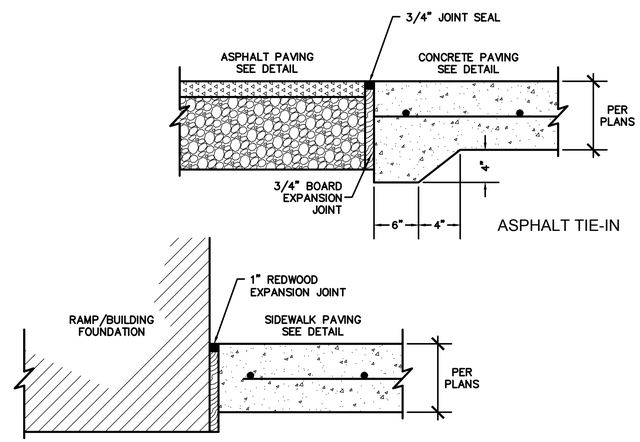

EXPANSION JOINTS (5)

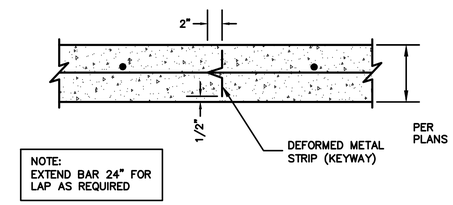

NOTE:
EXTEND BAR 24" FOR LAP AS REQUIRED

CONTROL JOINT (6)

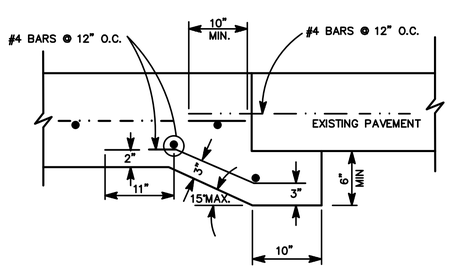

CONCRETE TIE-IN (7)

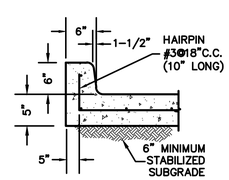

NOTES:

1. MORTAR FINISH NOT REQUIRED WHEN CURB IS POURED BY CURB MACHINE. CURB SHALL HAVE THE SAME OUTSIDE DIMENSIONS.

2. EXPANSION JOINTS SHALL BE INSTALLED AT ALL PAVEMENT EXPANSION JOINTS.

6" CURB (8)

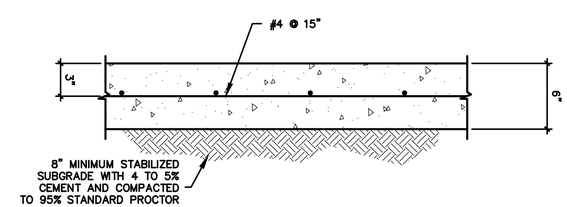

CONCRETE PAVEMENT (9)

GALVESTON COUNTY
BEACH PAVILION
CRYSTAL BEACH, TX 77650

Shelmark Project No : 17-217

SHELMARK ENGINEERING, L.L.C.
CIVIL | MARINE | PLANNING | STRUCTURAL
501 FM 517 ROAD EAST | DICKINSON, TEXAS 77539
TE FIRM NO. F-2119

STATE OF TEXAS
MARCUS J. MICHNA
84739
LICENSED PROFESSIONAL ENGINEER
12-22-2017

DATE	REVISION

CONSTRUCTION DOCUMENTS

DATE ISSUED:
12/22/2017

C2.01

PAVING DETAILS

COUNTY APPROVAL:
SIGNATURE _____ DATE_____

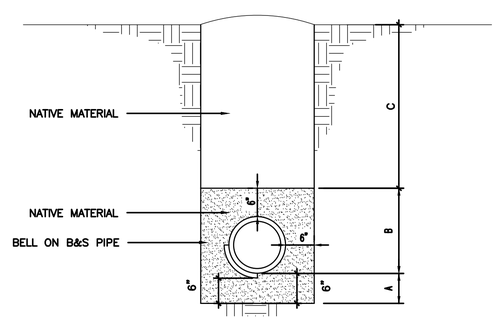

"A" CEMENT STABILIZED SAND (1 1/2 SACKS/TON)
(UNDER PAVEMENT OR LESS THAN 1' FROM PAVEMENT EDGE)
PLACED SAME DAY AS PIPE IS LAID.

"A" ON SITE SOIL BACKFILL TO BE PLACED IN 8"
LAYERS & COMPACTED TO 95% MAX DRY DENSITY.

"B" CEMENT STABILIZED SAND (1 1/2 SACKS/TON)
(UNDER PAVEMENT OR LESS THAN 1' FROM PAVEMENT EDGE)
PLACED SAME DAY AS PIPE IS LAID.

"B" ON SITE SOIL BACKFILL TO BE PLACED IN 8"
LAYERS & COMPACTED TO 95% MAX DRY DENSITY.

"C" CEMENT STABILIZED SAND (1 1/2 SACKS/TON)
(UNDER PAVEMENT OR LESS THAN 1' FROM PAVEMENT EDGE)
PLACED SAME DAY AS PIPE IS LAID.

"C" ON SITE SOIL BACKFILL TO BE PLACED IN 8"
LAYERS & COMPACTED TO 95% MAX DRY DENSITY.

NOTES:
ALL EXTERIOR CRACKS SHALL BE
WRAPPED WITH EVERGRIP EX-WRAP
BY GULF STATES ASPHALT CO., INC.

RCP TRENCH EMBEDMENT AND BACKFILL

1

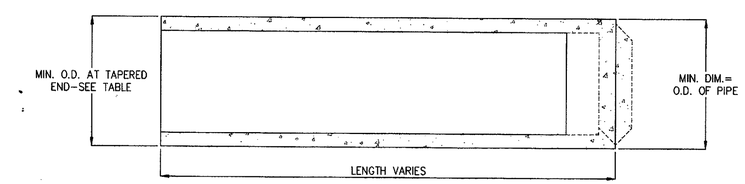

PLAN

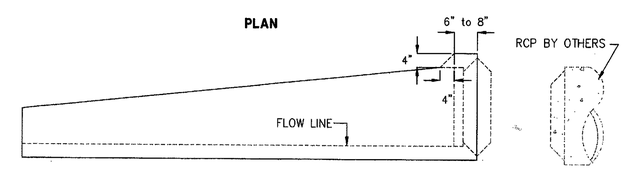

ELEVATION

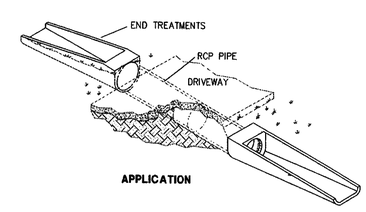

APPLICATION

PIPE I.D.	MIN. WALL THICK.	MIN. O.D.	SLOPE	MINIMUM LENGTH RUBBER GASKET	MINIMUM LENGTH TONGUE & GROOVE	MIN. O.D. @ TAPERED END
12"	2"	16"	5:1	–	4'-4"	16"
15"	2"	19"	6:1	–	6'-1"	19"
18"	2-1/2"	23"	4:1	5'-9"	–	21-1/2"
18"	2-1/2"	23"	4:1	–	5'-3"	21-1/2"
18"	2-1/2"	23"	6:1	8'-5"	–	21-1/2"
18"	2-1/2"	23"	6:1	–	7'-8"	21-1/2"
24"	3"	30"	4:1	8'-2"	–	27"
24"	3"	30"	4:1	–	7'-5"	27"
24"	3"	30"	6:1	12'-0"	–	27"
24"	3"	30"	6:1	–	11'-0"	27"
30"	3-1/2"	37"	4:1	9'-2"	9'-2"	31"
30"	3-1/2"	37"	6:1	13'-4"	13'-4"	31"
36"	4"	44"	4:1	10'-10"	10'-10"	36"
36"	4"	44"	6:1	15'-10"	15'-10"	36"
42"	4-1/2"	51"	4:1	12'-8"	12'-8"	41-1/2"
42"	4-1/2"	51"	6:1	18'-9"	18'-9"	41-1/2"

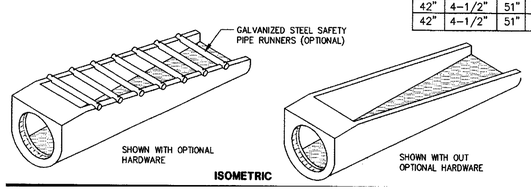

ISOMETRIC

© Park 2002

SAFETY END TREATMENT

2

GALVESTON COUNTY
BEACH PAVILION
CRYSTAL BEACH, TX 77650

Shelmark Project No : 17-217

SHELMARK ENGINEERING, L.L.C.
CIVIL | MARINE | PLANNING | STRUCTURAL
501 FM 517 ROAD EAST | DICKINSON, TEXAS 77539
TE FIRM NO. F-2119

STATE OF TEXAS
MARCUS J. MICHNA
84739
LICENSED
PROFESSIONAL ENGINEER
12-22-2017

DATE	REVISION

CONSTRUCTION DOCUMENTS

DATE ISSUED:
12/22/2017

C2.02

STORM SEWER DETAILS

COUNTY APPROVAL:
SIGNATURE _____ DATE_____

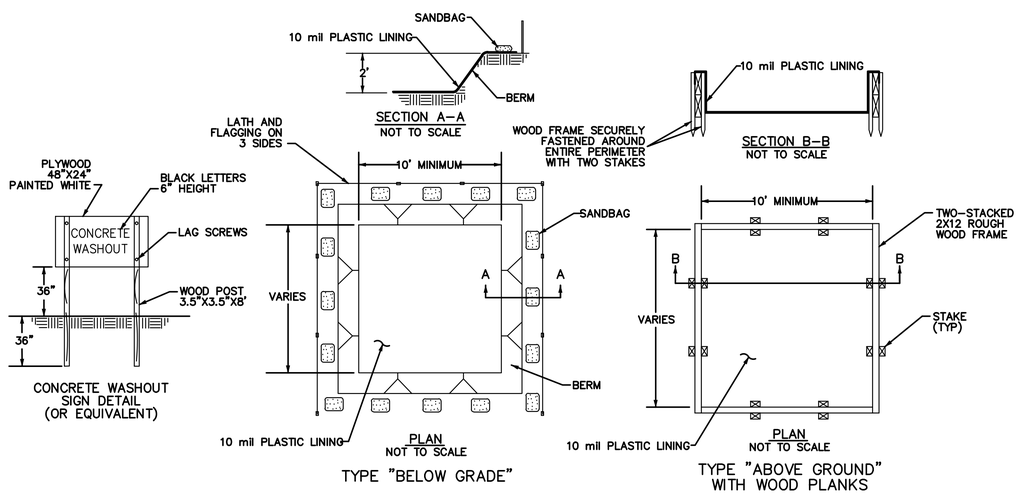

NOTES:

1. CONCRETE WASHOUT FACILITIES ARE TO BE LOCATED AT LEAST 50' FROM STORM DRAIN INLETS, OPEN DRAINAGE FACILITIES, OR WATER BODIES.
2. A CONCRETE WASHOUT SIGN SHALL BE INSTALLED WITHIN 30' OF THE CONCRETE WASHOUT FACILITY.
3. ONCE 75% OF THE ORIGINAL VOLUME OF THE WASHOUT PIT IS FILLED OR IF THE LINER IS TORN, THE MATERIAL MUST BE REMOVED AND PROPERLY DISPOSED OF ONCE IT IS COMPLETELY HARDENED. ONCE THE HARDENED CONCRETE IS REMOVED, THE LINER MUST BE REPLACED (IF TORN). A NEW PIT MUST BE CONSTRUCTED IF THE ORIGINAL STRUCTURE IS NO LONGER SUITABLE.
4. ONCE THE PIT IS NO LONGER NEEDED, ENSURE ALL WASHOUT MATERIAL HAS COMPLETELY HARDENED, THEN REMOVE AND PROPERLY DISPOSE OF ALL MATERIALS.

CONCRETE TRUCK WASHOUT 1

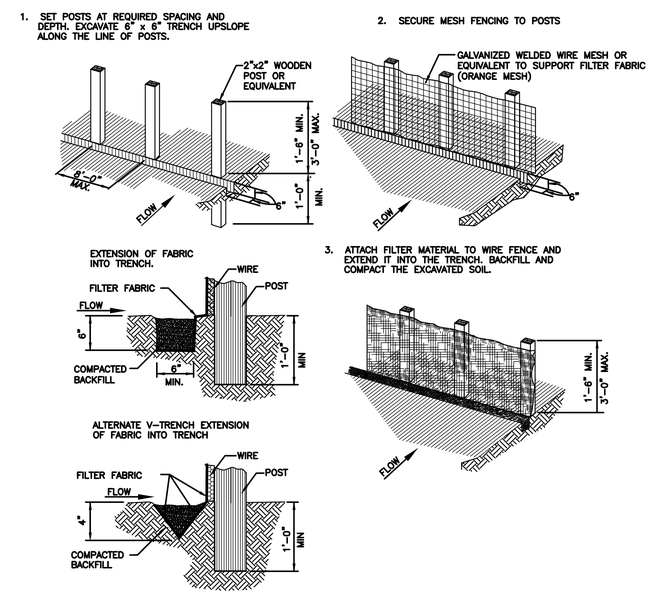

GENERAL NOTES:

1. SECURELY FASTEN MESH FENCING TO POSTS WITH STAPLES OR TIE WIRES.
2. SECURELY FASTEN FILTER FABRIC TO MESH FENCING.
3. WHEN TWO SECTIONS OF FILTER FABRIC ADJOIN EACH OTHER, OVERLAP 6 INCHES AT A POST, FOLD TOGETHER, AND ATTACH TO A POST.
4. REMOVE SEDIMENT DEPOSITS WHEN SILT REACHES ONE–THIRD OF THE HEIGHT OF THE FENCE IN DEPTH.

RFB
SYMBOL

REINFORCED FILTER FABRIC BARRIER 2

GALVESTON COUNTY
BEACH PAVILION
CRYSTAL BEACH, TX 77650

Shelmark Project No : 17–217

SHELMARK ENGINEERING, L.L.C.
CIVIL | MARINE | PLANNING | STRUCTURAL
501 FM 517 ROAD EAST | DICKINSON, TEXAS 77539
TX FIRM NO. F-2119

STATE OF TEXAS
MARCUS J. MICHNA
84739
LICENSED PROFESSIONAL ENGINEER
12-22-2017

DATE	REVISION

CONSTRUCTION DOCUMENTS

DATE ISSUED:
12/22/2017

C2.03

SWPPP DETAILS

COUNTY APPROVAL:
SIGNATURE _____ DATE_____

ABBREVIATIONS

&	And
∠	Angle
@	At
℄	Centerline
°	Degrees
Ø	Diameter
±	Plus or Minus
#	Pound or Number
Acous.	Acoustical
A.D.	Area Drain
Adj.	Adjustable
Aggr.	Aggregate
A.F.F.	Above Finished Floor
AL	Aluminum
Approx.	Approximate
Arch.	Architectureal
Asph	Asphalt
BD.	Board
Bit.	Bituminous
Bldg.	Building
Blk	Block
Blk'g	Blocking
Bm	Beam
Bot.	Bottom
B.O.	Bottom Of
Cab.	Cabinet
C.B.	Catch Basin
Cem.	Cement
Cer.	Ceramic
C.I.	Cast Iron
C.G.	Corner Guard
CJ	Control Joint
	Construction Joint
Clg.	Ceiling
Clo.	Closet
Clr.	Clear
C.O.	Cased Opening
Col.	Column
Conc.	Concrete
Conn.	Connection
Constr.	Construction
Cont.	Continuous
Corr.	Corridor
Ctsk.	Countersunk
Cntr.	Counter
Ctr.	Center
Cust.	Custodian
Dbl.	Double
Dept.	Department
D.F.	Drinking Fountain
Det.	Detail
Dia.	Diameter
Dim.	Dimension
Disp.	Dispenser
Dn.	Down
D.O.	Door Opening
Dr.	Door
Dwr.	Drawer
D.S.P.	Dry Stand Pipe
Dwg.	Drawing
E.	East
EA	Each
EJ	Expansion Joint
EL	Elevation
Elec.	Electrical
Elev.	Elevator
Emer.	Emergency
Encl.	Enclosure
E.A.	Electrical Power Board
EQ	Equal
Eqpt.	Equipment
EWC	Electrical Water Cooler
Ext'g	Existing
Exp.	Expansion
Expo.	Exposed
Ext.	Exterior

FA	Fire Alarm
FB	Flat Bar
FD	Floor Drain
Fnd.	Foundation
FE	Fire Extinguisher
FEC	Fire Extinguisher Cabinet
FFE	Finished Floor Elevation
FHC	Fire Hose Cabinet
Fin.	Finish
Fl.	Floor
Flash.	Flashing
Fluor.	Fluorescent
FOC	Face of Concrete
FOF	Face of Finish
FOS	Face of Stud
Fprp	Fire Proof
FS	Full Size
Ft.	Foot or Feet
Ftg.	Footing
Furr.	Furring
Fut.	Future
FV	Field Verify
Ga.	Gauge
Galv.	Galvanized
GB	Grab Bar
GL	Glass
Gnd.	Ground
Gr.	Grade
Gyp.	Gypsum
HB	Hose Bib
HC	Hollow Core
Hdwd.	Hardwood
HM	Hollow Metal
Horiz.	Horizontal
Hr.	Hour
Hgt.	Height
ID	Inside Diameter
Insl.	Insulation
Int.	Interior
Jan.	Janitor
Jt.	Joint
Kit.	Kitchen
Lab.	Laboratory
Lam.	Laminate
Lav.	Lavatory
Lkr.	Locker
Lt.	Light
Max.	Maximum
MC	Medicine Cabinet
Mech.	Mechanical
Memb.	Membrane
Mtl.	Metal
Mfr.	Manufacturer
Min.	Minimum
Mir.	Mirror
Misc.	Miscellaneous
MO	Masonry Opening
Mtd.	Mounted
Mul.	Mullion
N	North
NE	Northeast
NIC	Not in Contract
No. or #	Number
Nom.	Nominal
NTS	Not to Scale
NW	Northwest
OA	Overall
OC	On Center
OD	Outside Diameter
Off.	Office
Opng.	Opening
Opp.	Opposite

Prcst.	Precast
PL	Plate
P.Lam.	Plastic Laminate
Plas.	Plaster
Plwd.	Plywood
Pr.	Pair
Ptd.	Painted
PTD	Paper Towel Dispenser
PTD/R	Paper Towel Dispenser & Receptacle Combo
Ptn.	Partition
PTR	Paper Towel Receptacle
R	Riser
Rad.	Radius
RD	Roof Drain
Ref.	Reference
Refr	Refrigerator
Reinf.	Reinforced
Req.	Required
Resil.	Resilient
Rm.	Room
RO	Rough Opening
S	South
SC	Solid Core
SCD	Seat Cover Dispenser
Sched.	Schedule
SD	Soap Dispenser
SE	Southeast
Sect.	Section
Slf	Shelf
Shr.	Shower
Sht.	Sheet
Sim.	Similar
SND	Sanitary Napkin Dispenser
SNR	Sanitary Napkin Receptacle
Spec.	Specification
Sq.	Square
SS	Stainless Steel
S.sk.	Service Sink
Sta.	Station
Std.	Standard
Stl.	Steel
Stor.	Storage
Strl.	Structural
Susp.	Suspended
SW	Southwest
Sym.	Symmetrical
Trd.	Thread
TB	Towel Bar
TC	Top of Curb
Tel.	Telephone
Terr.	Terrazzo
T&G	Tongue and Groove
T	Thick
Th	Thick
TO	Top Of
TOH	Top of Header
TOP	Top of Pavement
TOS	Top of Steel
TOW	Top of Wall
TPD	Toilet Paper Dispenser
Typ.	Typical
Unf.	Unfinished
UNO	Unless Noted Otherwise
Ur.	Urinal
Vert.	Vertical
Vest.	Vestibule
W	West
W/	With
WC	Waster Closet
W/O	Without
Wp.	Waterproof
Wsct.	Wainscot
Wt.	Weight

SYMBOLS & LEGENDS

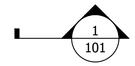

Section Mark Symbol:
Indicates Detail Number and Sheet Number

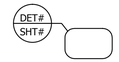

Detail Symbol:
Indicates section detail number and sheet number where it is located

Exterior Elevator Symbol:
Indicates elevation number and sheet number where it is located

Interior Elevation Symbol:
Indicates interior elevation number and sheet number where it is located.

Note Symbol:
Indicates numbered sheet specific notes by symbol

Wall Type Mark Symbol:
Indicates particular configuration of a wall. Refer to wall type sheet(s).

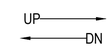

Stair Direction Symbol:
Indicates the direction of the stair, up or down.

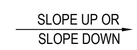

Slope Arrow Symbol:
Indicates the slope direction of a particular floor level plane.

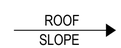

Roof Slope Arrow:
Indicates the roof slope direction.

Elevation Symbol:
Indicates a building level elevation

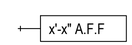

Ceiling Elevation Mark Symbol:
Indicates the ceiling elevation. Refer to Reflected Ceiling Plans.

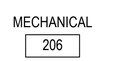

Room Label System:
Indicates room number. Refer to Room Finish Schedule

Door Symbol:
Indicates door number. Refer to Door Schedule

Window Symbol:
Indicates window number. Refer to Window Schedule.

Accessory Symbol:
Indicates the restroom's accessories. Refer to Finish Schedule.

GENERAL NOTES:

1. All materials and workmanship shall confirm to project documents, applicable requirements of the:
   - 2012 International Building Code
   - 2012 International Energy Code
   - 2012 International Fire Code 2009 International Fire Code
   - 2012 International Fuel and Gas Code
   - 2012 Mechanical Code
   - Flood Ordinance No. 02-085
   - National Electrical Code, 2014
   - 2012 American with Disabilities Act
   - Texas Accessibility Code
   - and all local amendments, ordinances, codes and requirements.
2. The General Contractor must inspect the site before beginning work and identify conflicts or inconsistencies between the contract documents and existing conditions and/or conditions that require deviation from constructing the work as indicated in the contact documents.
3. The General Contractor must comply with the rules of the City of Galveston for the construction, use of premises, access to the project site and trash removal.
4. The General Contractor shall be responsible for:

a. Dimensions which must be confirmed and correlated at the job site.

b. Fabrication processes and techniques of construction.

c. Coordinating the work, or other trades and the satisfactory performance of the work.

5. The documents indicate general and typical details of construction, similar details apply to similar conditions subject to review by the Architect/ Engineer.
6. Refer to Architectural Drawing for:

a. Building floor plans, elevations, sections, and details.

7. Refer to Structural Drawings for:

a. Foundation Plans and Dimensions

b. Framing Plans and Dimensions

c. Roof Framing Notes and Dimensions

d. Structural Details and Notes

8. All wood in contact with concrete, masonry, or exposed to weather shall be ACQ treated lumber. All fasteners in ACQ treat wood to be Stainless Steel.
9. Restroom walls to have moisture resistant gypsum board.
10. Mechanical Furr-downs, cabinets, etc. that abut rated wall/ceiling/floor assemblies must be installed after the fire rated gypsum board.
11. All electrical and plumbing penetrations in rated assemblies shall be fire stopped top, bottom, and sides with UL approved fire rated materials.
12. All Insulation shall have a flame spread rating and a smoke development rating as required by the International Building Code.
13. All veneered walls to comply with fastening requirements per the building Code being enforced by the Authority Having Jurisdiction on this project.
14. Fire Stopping and fire blocking are not shown. General Contractor shall fire stop and fire block as required by the Building Code.
15. Provide blocking for all millwork, light fixtures, accessories, and recessed fixtures.
16. All insulation, windows, plumbing fixtures, and other energy related items shall meet Energy Code Requirements.

GALVESTON COUNTY
BEACH PAVILION
CRYSTAL BEACH, TX 77650

BE–Arc LLC Project No : C–17–003.01

BRAX EASTERWOOD DESIGN
architecture • planning

BRAX EASTERWOOD
DESIGN
2728 AVENUE Q, SUITE 2
GALVESTON TEXAS 77550
PHONE 409–354–8976
EASTERWOOD@BEAIA.COM

ARCHITECT # 19694

SEAL

DATE	REVISION

CONTRACT DOCUMENTS

DATE ISSUED:
12/12/2017

COPYRIGHT 2017

G0.1

COUNTY APPROVAL:
SIGNATURE _____ DATE_____

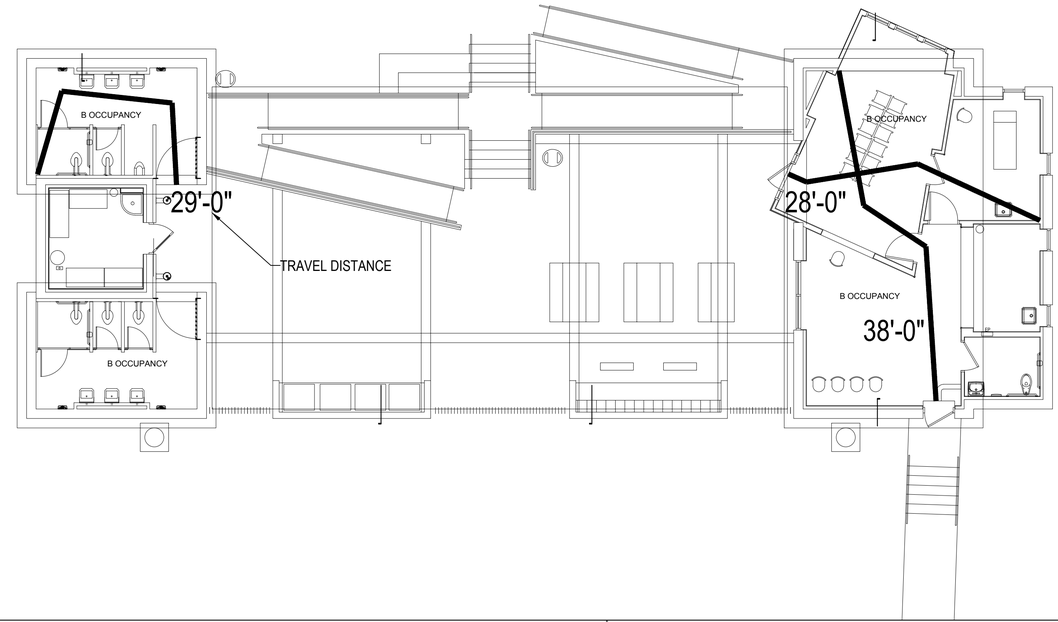

GALVESTON COUNTY BEACH PAVILION - CRYSTAL BEACH, TX - CODE ANALSIS

Code: 2006 International Building Code
2009 International Energy Conservation Code
2006 International Fire Code
2006 International Mechanical Code
2006 International Plumbing Code
Texas Accessibility Standard

1. Occupancy and Construction Type Classification – B each side of pavilion Type 3B construction.

BUILDING SPACE USE AREAS (PER TABLE 1004.1):

Reception and Service Pavilion
A -3 Waiting area Occupancy / Occupant Load (per 15 sf) 286 SF = 19
Less than 50 occupants – use B Occupancy

B- Service area Occupancy / Occupant Load (per 100 sf) 763 SF .= 8

Restrooms and Storage
B Restroom Occupancy / Occupant Load (per 100 sf) 431 SF = 4

S Storage Occupancy / Occupant Load 806 SQFT (per 300 sf) 169 SF = 1

Total Building First Floor Space Occupant Load: 32

Total First Floor Area: 1700 SF

Proposed areas comply with Table 503 of 2006 IBC

Building Type is Type-3B. Masonry construction and interior wood framing

	Occupancy	Construction	Max No. Stories	Max Area per Floor
Allowed	B	3B	3 Stories	19,000SF

**The space is planned to be not Sprinklered

3. Fire Resistance Requirements – Table 601 Type 3B

	Rating
Structural Frame	0 Hr.
Bearing Walls (Ext)	2 Hr.
Bearing Walls (Int)	0 Hr.
Non-Bearing Walls (Ext)	0 Hr.
Non-Bearing Walls (Int)	0 Hr.
Floor	0 Hr.
Roof	0 Hr.

704.5 Fire Resistance Ratings – Exterior walls shall be fire-resistant rated in accordance with tables 601 and 602. The fire resistance rating of exterior walls with a fire separation distance of greater than 5 feet shall be rated for exposure to fire from the inside. The fire-resistance rating of exterior walls with a fire separation distance of 5 feet or less shall be rated for exposure to fire from both sides.

4. Exterior Wall Openings – Table 704.8
Existing building complies with Openings Permitted for non-sprinklered Building. All Openings Located on the North, South, and East.

** North Wall setback >30' from property line. Faces alley/street Openings allowed– Actual 6%
** East Wall setback 30' from property line. Faces alley/street Openings allowed– Actual 2%
** South Wall setback 30' from property line. Openings allowed– Actual 7%
** West Wall of Structure Setback 30' from property line. Unlimited Openings allowed – Actual 4%

5. Shaft and Vertical Exit Enclosures – Section 707, 708
No vertical exit enclosures

6. Required Separations - Table 508.4
No separations

7. Fire Resistant Requirements for Exterior Walls - Table 602

> 30'	0 Hr.
>10' - <30'	0 Hr.
>5' - <10'	1 Hr.
<5'	1 Hr.

Exterior Walls are 1 Hr based on construction type.

8. Occupant Load Analysis – Table 1004.1.1
See combined occupancy calculations listed above in 1.

9. Means of Egress – NFPA 101 and IBC Section 1009
Max. Travel Distance = B occupancy < 200 feet PER TABLE 1016.1 – Actual Max Travel Distance 70'
Min. Corridor Width 36 or .2" per occupant
Min. Egress Width per occupants – NFPA Table 7.3.2.1 and Section 1015

	Inches per Occupant	
Corridors/Doors	0.2	Non- Sprinklered

Corridors/Doors Width Required 32 x .2 = 6.4"

Number of Required Exits – Section 1015 and 1021

No Occupants	No Exits
<50	1
50-500	2
500-1000	3
>1000	4

Required Number of Exits 1 – Actual Provided 1

Maximum Dead End Corridor = 20 feet - Actual 0'. Rooms length < 2.5 times width.

GALVESTON COUNTY
BEACH PAVILION
CRYSTAL BEACH, TX 77650

BE–Arc LLC Project No : C–17–003.01

BRAX EASTERWOOD DESIGN
architecture + planning

BRAX EASTERWOOD
DESIGN
2728 AVENUE Q SUITE 2
GALVESTON TEXAS 77550
PHONE 409–534–8976
EASTERWOOD@BEAIA.COM

ARCHITECT # 19694

SEAL

DATE	REVISION

CONTRACT DOCUMENTS

DATE ISSUED:
12/12/2017

COPYRIGHT 2017

G0.2

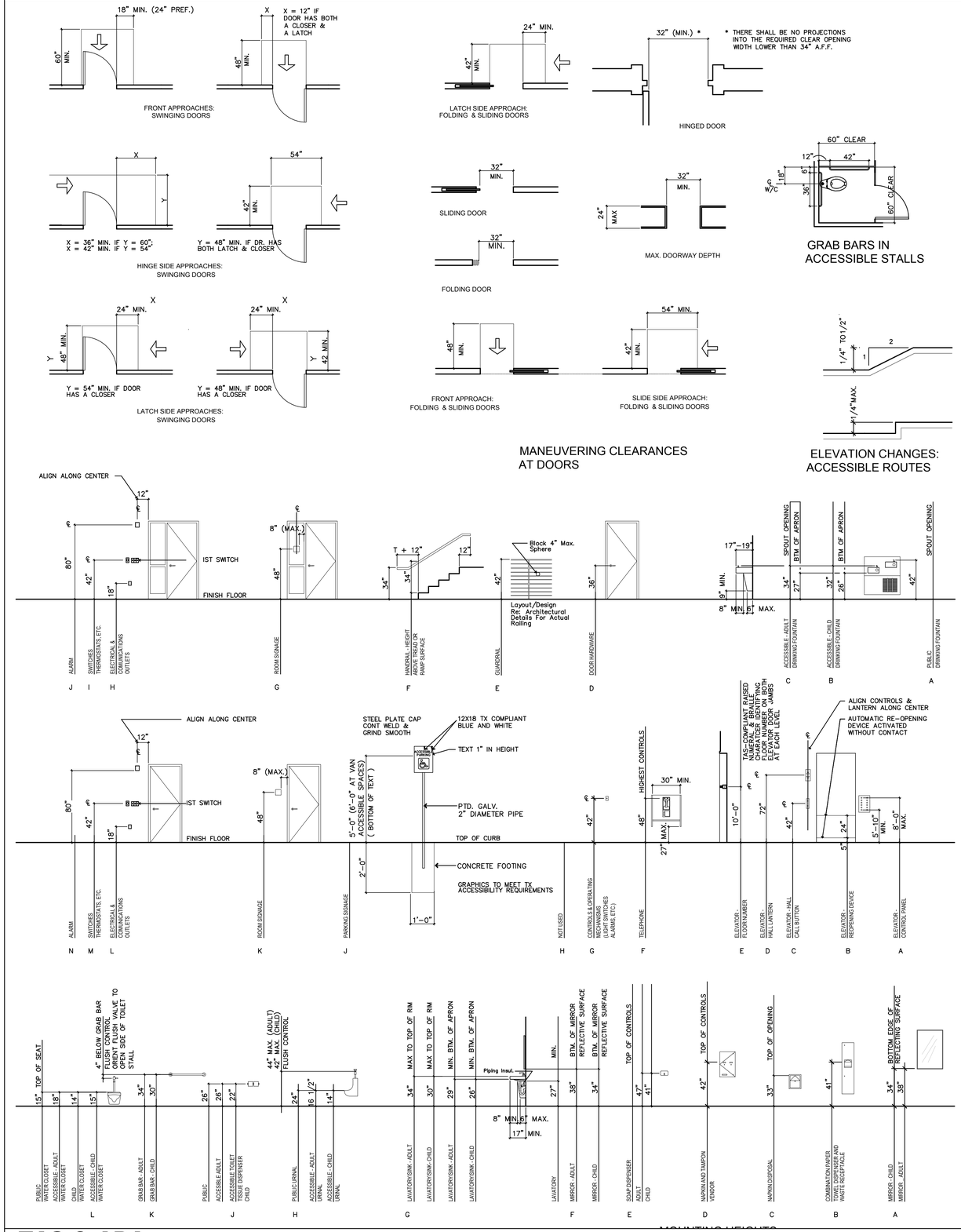

TAS & ADA

NTS

COUNTY APPROVAL:
SIGNATURE _____ DATE_____

TEXAS ACCESSIBILITY CODE REQUIREMENTS

General Notes:
1. Minimum clear width of accessible route: 36".
2. Running slope shall not exceed 1:20 (Cross slope shall not exceed 1:50).
3. 1/4" to 1/2" changes in level require edge to be beveled with a slope no greater than 1:2.
4. The highest operable part of controls, dispensers, receptacles and other operable equipment shall be placed not higher than 3' 5-1/2" and no lower than 1' 3-1/2" above finished floor. These requirements shall apply to controls and operating mechanisms which are expected to be operable by occupants, visitors, or other users of a building or facility and may include, but are not limited to, thermostats, light switches, alarm activating devices, ventilators and electrical outlets.
5. Provide solid blocking at all wall mounted accessories.
6. For areas where children are under High School age are the primary users, accessible mounting heights are different & should be adjusted accordingly.

Ground and Floor Surfaces:
1. Ground and floor surfaces along accessible routes and in accessible rooms and spaces including floors, walks, ramps, stairs, and curb ramps, shall be stable, firm and slip-resistant.

Ramps:
1. Maximum slope: 1:12.
2. Transitions shall be flush and free of abrupt changes.
3. Maximum slope of adjacent surfaces: 1:20.
4. Minimum clear width: 36".
5. Handrails required if rise exceeds 6" or run exceeds 72", except at curb ramps
6. Handrails shall be provided on both sides of ramps.
7. Inside rail on switchback or dogleg ramps shall be continuous.
8. Where not continuous, rails shall extend at least 12" beyond top and bottom of ramp, parallel to ground surface.
9. Height of handrails: 34" (34-36).
10. Clear floor space between rails and any wall shall be 1-1/2".
11. Gripping surfaces shall be uninterrupted by newel posts, other construction elements, or obstructions.
12. Ends shall be rounded, or returned smoothly to floor, wall or post.
13. Handrails shall not rotate in their fittings.
14. Diameter or width of gripping surface shall be 1-1/4" to 1-1/2", or shall provide an equivalent gripping surface.
15. Exterior curb ramps will have colored concrete to contrast with adjacent concrete color.
16. Exterior curb ramps will have grooves 1/4" deep, 1/4" to 3/4" wide, 3/4" to 2" apart, and arranged so that water will not accumulate and the surfaces are detectable underfoot.

Stairs:
1. All steps on a flight of stairs shall have uniform riser heights and tread widths. Minimum tread depth shall be 11" unless otherwise noted, measured from riser to riser.
2. Undersides of nosings shall not be abrupt. Radius of curvature at leading tread edge shall not exceed 1/2". Risers shall be sloped or underside of nosing shall have an angle not less than 60 degrees. Nosings shall project no more than 1-1/2".
3. Handrails are required at both sides of all stairs.
4. Inside rail on switchback or dogleg stairs shall be continuous.
5. Where not continuous, handrail extensions shall be provided as follows: Top of stair flights: Parallel to floor, 12" minimum beyond top riser nosing. Bottom of stair flights: Continue sloping for one tread width beyond bottom rise, plus 12" minimum parallel to floor.
6. Handrails height: 34" measured from stair nosing.
7. Clear floor space between rail and any wall shall be 1-1/2".
8. Gripping surfaces shall be interrupted by newel posts, other construction elements, or obstructions.
9. Ends shall be rounded, or returned smoothly to floor, wall, or post.
10. Handrails shall not rotate in their fittings.
11. Diameter or width of gripping surface shall be 1-1/4" to 1-1/2", or shall provide an equivalent gripping surface.

Doors:
Re: Clearance diagrams - this sheet.

1. Doorways shall provide a clear opening of 32" min. with the door open 90 degrees.
2. Openings more than 24" in depth shall provide a clear opening of 36" minimum.
3. Maximum threshold height: 1/2".
4. Door hardware: Handles, pulls, latches, locks and other operating devices shall have a shape that is easy to grasp with one hand and does not require tight grasping, tight pinching or twisting of the wrist to operate.
5. Lever-operated mechanisms, push-type mechanisms, and U-shaped handles are acceptable designs.
6. Hardware required for passage shall be mounted no higher than 41-1/2" above finished floor.
7. Door Closer: If a door has a closer, then the sweep period of the closer shall be adjusted so that from an open position of 70 degrees, the door will take at least 3 seconds to move to a point 3" from the latch, measured to the leading edge of the door.
8. Door opening Force: The maximum force for pushing or pulling open a door shall be as follows:
   a. Exterior hinged doors: 8.5 lb.
   b. Interior hinged doors: 5 lb.
   c. Sliding or folding: 5 lb.
   d. Fire doors: minimum opening force allowed by authorities having jurisdiction.
9. Automatic Doors and Power-Assisted Doors: If an automatic door is used, then it shall comply with ANSI/BHMAA156.10-1985. Slowly opening , low powered, automatic doors shall comply with ANSIA156.19-1984. Such doors shall not open to back check faster than 3 seconds and shall require not more than 15 lb to stop door movement. If a power-assisted door is used, its door opening force shall comply with forces listed above and its closing force shall comply with ANSIA156.19-1984

Water Closets:
1. Water closets shall be located 18" from a side wall or partition.
2. The height to the top of the toilet seat shall be 17" to 19" (Adult) 15" (Child).
3. For water closets located in toilet stalls, the following grab bars shall be provided.
   34" above the finish floor (Adult) 30" above the finish floor (Child):
   Side Wall: 42" long minimum, 12" from back wall.
   Back Wall: 36" long minimum, 12" minimum each side of water closet centerline.
4. Flush controls shall be 30" (Adult) 26" (Child) above the finish floor. Controls for flush valves shall be mounted on the wide side of toilet areas.
5. Toilet paper dispensers shall be installed on the side wall, below the grab bar, a maximum 36" from the rear wall.

Urinals:
1. Urinals shall be wall hung with an elongated rim.
2. Flush controls shall be 44" (Adult) 42" (Child) maximum above the finished floor.

Lavatories and Mirrors:
1. Hot water and drain pipes under lavatories shall be insulated or otherwise configured to protect against contact.
2. If medicine cabinets are provided, at least one shall be located with a usable shelf no higher than 41-1/2" above the floor.
3. Max. force allowed for operation of sink and lavatory faucets is 5 Lbf.

Grab Bars:
1. Diameter or width of gripping surface shall be 1-1/4" to 1-1/2", or the shape shall provide an equivalent gripping surface.
2. The space between grab bars and adjacent walls shall be 1-1/2".
3. Grab bars shall not rotate within their fittings.
4. Grab bars and adjacent wall surfaces shall be free of sharp or abrasive surfaces.
5. Edges shall have a radius of 1/8" minimum.

Alarms:
1. Visual alarm signal appliances shall be placed 80 inches above the highest floor level within the space, or 6" below the ceiling, whichever is lower.

Signage:
1. Signs which designate permanent rooms and spaces shall comply with the requirements listed below for:
   Where permanent identification is provided for rooms and spaces, signs shall be installed on the wall adjacent to the latch side of the door.
   Where there is no wall space to the latch side of the door, including at double-leaf doors, signs shall be placed on the nearest adjacent wall.
2. Character Proportion. Letters and numbers on signs shall have a width-to-height ratio between 3:5 and 1:1 and a stroke-width-to-height ratio between 1:5 and 1:10 using upper-case "X" for measurements. Lower case letters are permitted.
3. Raised and Brailled Characters and Pictorial Symbol Signs (Pictograms). Letters and numerals shall be raised 1/32 in, upper case, sans serif or simple serif type and shall be accompanied with Grade 2 Braille. Raised characters shall be at least 5/8 in (16mm) high, but no higher than 2 in (50mm). Pictograms shall be accompanied by the equivalent verbal description placed directly below the pictogram. The border dimension of the pictogram shall be 6 in (152mm) minimum in height.
4. Finish and Contrast. The characters and background of signs shall be eggshell, matte, or other non-glare finish. Characters and symbols shall contrast with their background - either light characters on a dark background or dark characters on a light background.

Wheelchair Lift:
1. Controls and operating mechanisms shall be located so that either a forward or side approach reach is possible from either direction of travel and shall be mounted between at least 28" and 48" above the platform floor.
2. One handrail shall be provided.
3. Wheelstops and guardrails shall be provided to prevent wheel chairs from rolling or slipping off platform edge.

GALVESTON COUNTY BEACH PAVILION CRYSTAL BEACH, TX 77650

BE-Arc LLC Project No : C-17-003.01

BRAX EASTERWOOD DESIGN
architecture + planning

BRAX EASTERWOOD
DESIGN
2728 AVENUE Q SUITE 2
GALVESTON TEXAS 77550
PHONE 409-354-8976
EASTERWOOD@BEAIA.COM

ARCHITECT # 19694

SEAL

DATE	REVISION

CONTRACT DOCUMENTS

DATE ISSUED:
12/12/2017

COPYRIGHT 2017

G0.3

TAS AND ADA

COUNTY APPROVAL:
SIGNATURE _____ DATE_____

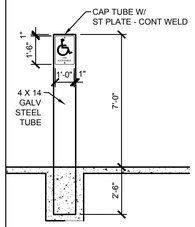

1 SIGN DETAIL
Scale: 1/4" = 1'-0"

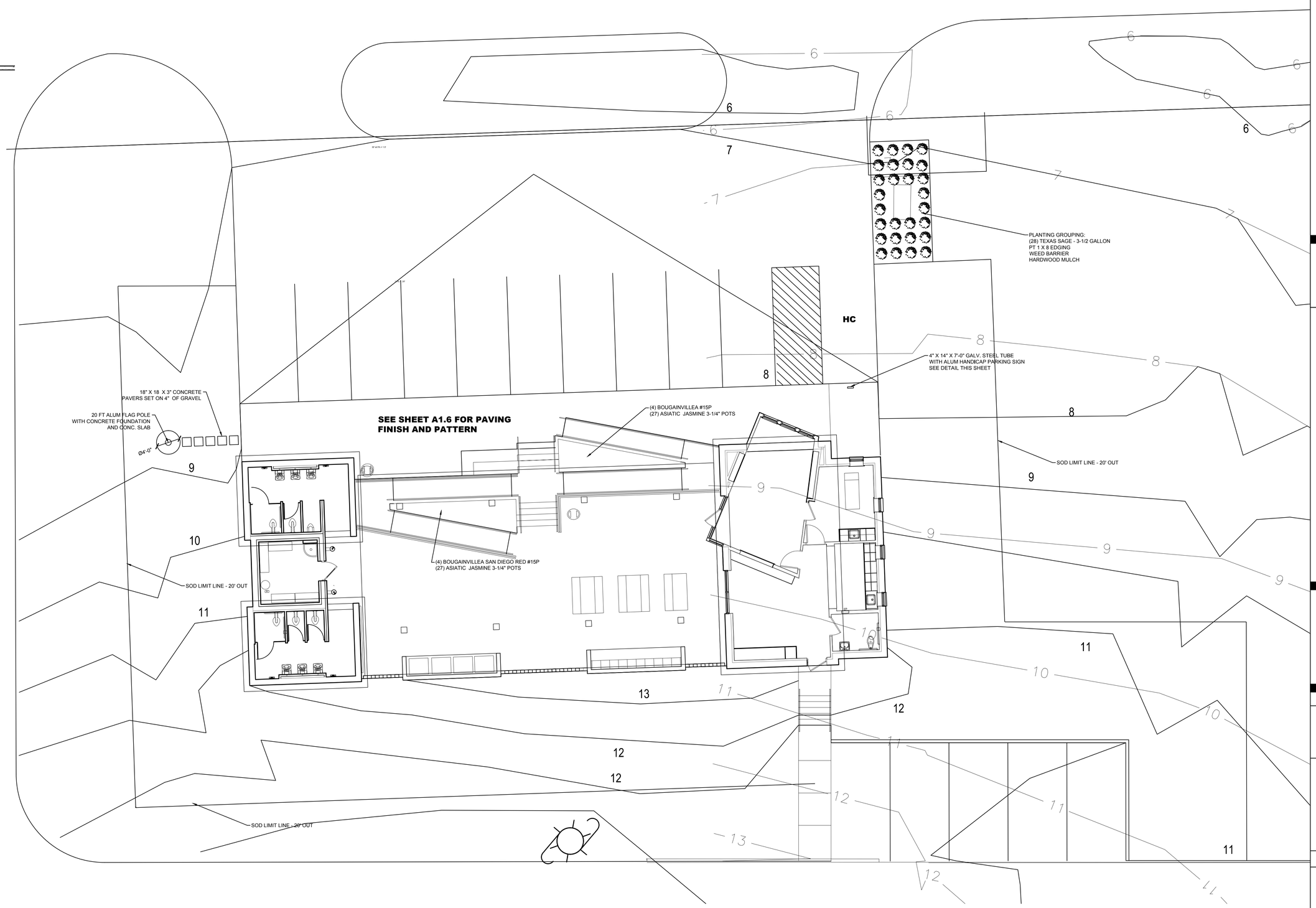

SITE PLAN 1/8" = 1'-0" **1**

GALVESTON COUNTY
BEACH PAVILION
CRYSTAL BEACH, TX 77650

BE–Arc LLC Project No : C–17–003.01

BRAX EASTERWOOD DESIGN
architecture + planning

BRAX EASTERWOOD
DESIGN
2728 AVENUE Q SUITE 2
GALVESTON TEXAS 77550
PHONE 409–354–8976
EASTERWOOD@BEAIA.COM

ARCHITECT # 19694

SEAL

DATE	REVISION

CONTRACT DOCUMENTS

DATE ISSUED:
12/12/2017

COPYRIGHT 2017

A0.1

SITE PLAN

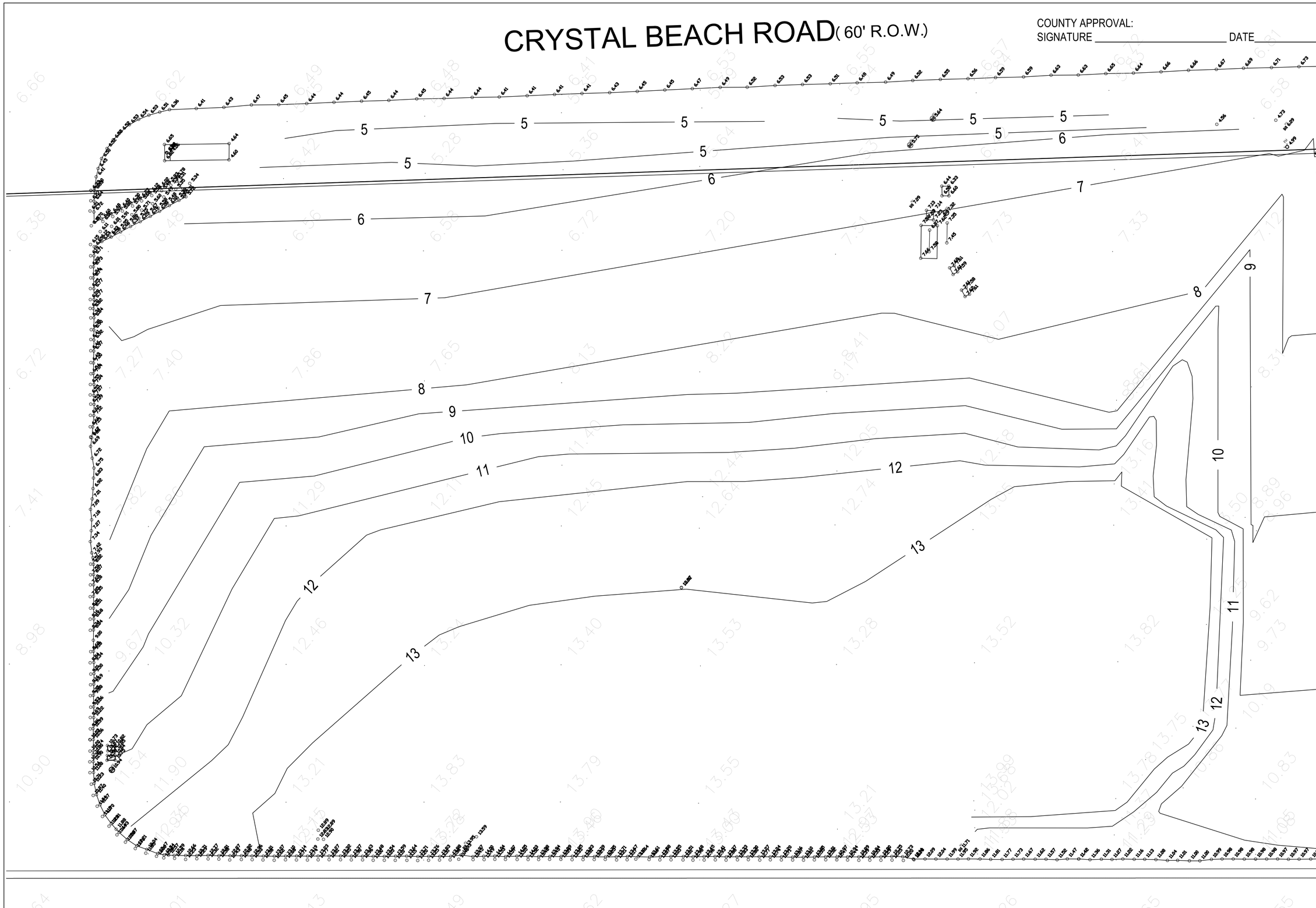

EXISTING CONTOURS

1/8" = 1'-0" | 1

GALVESTON COUNTY
BEACH PAVILION
CRYSTAL BEACH, TX 77650

BE-Arc LLC Project No : C-17-003.01

BRAX EASTERWOOD DESIGN
architecture + planning

BRAX EASTERWOOD
DESIGN
2728 AVENUE Q, SUITE 2
GALVESTON TEXAS 77550
PHONE 409-354-8976
EASTERWOOD@BEAIA.COM

ARCHITECT # 19694

SEAL

DATE	REVISION

CONTRACT DOCUMENTS

DATE ISSUED:
12/12/2017

COPYRIGHT 2017

A0.2

EXISTING CONTOURS

COUNTY APPROVAL:
SIGNATURE _____ DATE_____

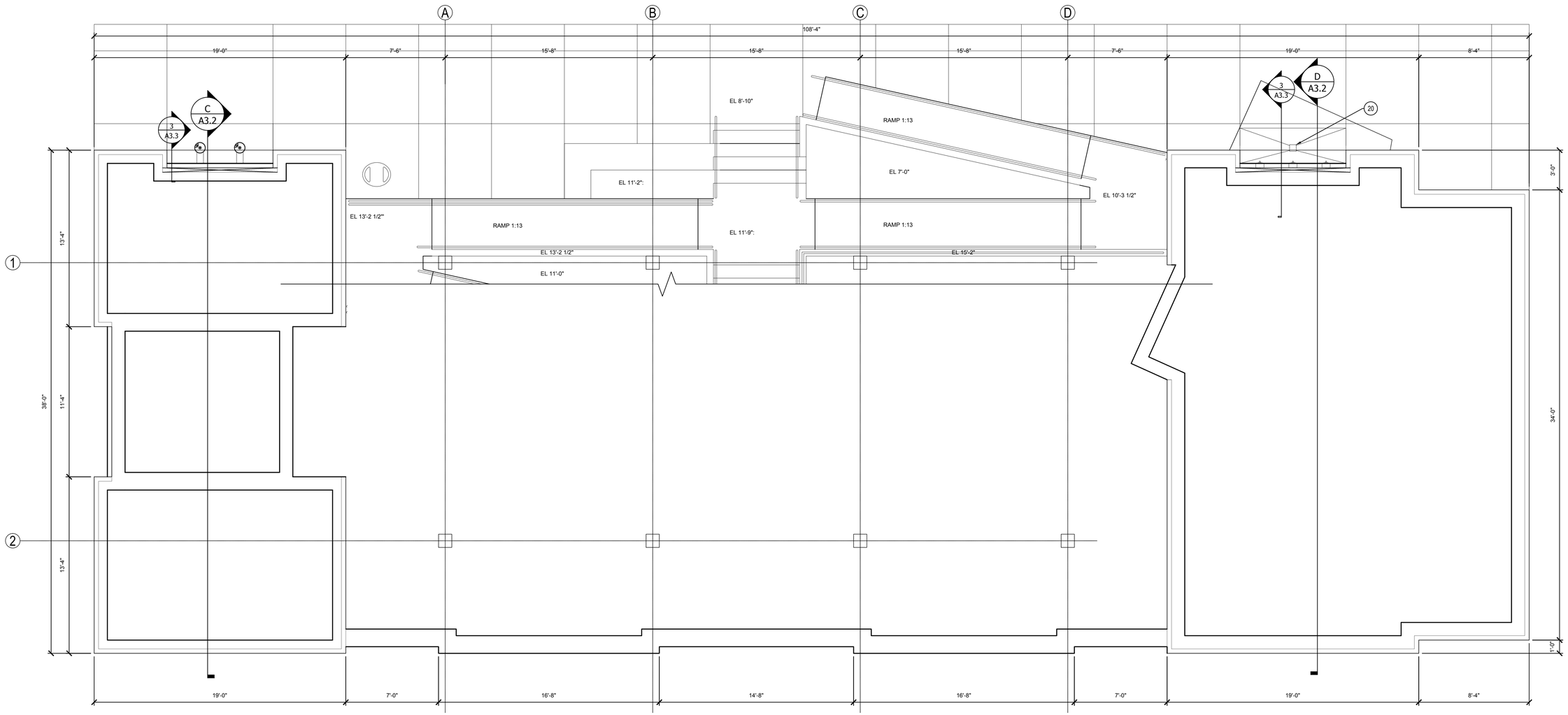

KEY NOTES:
20. FLOOR DRAIN WITH TRAP - ZURN FR05NIA3S-C

N

LOWER LEVEL FLOOR PLAN

1/4" = 1'-0" | 1

GALVESTON COUNTY
BEACH PAVILION
CRYSTAL BEACH, TX 77650

BE–Arc LLC Project No : C–17–003.01

BRAX EASTERWOOD DESIGN
architecture + planning

BRAX EASTERWOOD
DESIGN
2728 AVENUE Q SUITE 2
GALVESTON TEXAS 77550
PHONE 409-354-8976
EASTERWOOD@BEAIA.COM

ARCHITECT # 19694

SEAL

DATE	REVISION

CONTRACT DOCUMENTS

DATE ISSUED:
12/12/2017

COPYRIGHT 2017

A1.0

FLOOR PLAN

COUNTY APPROVAL:
SIGNATURE _____ DATE_____

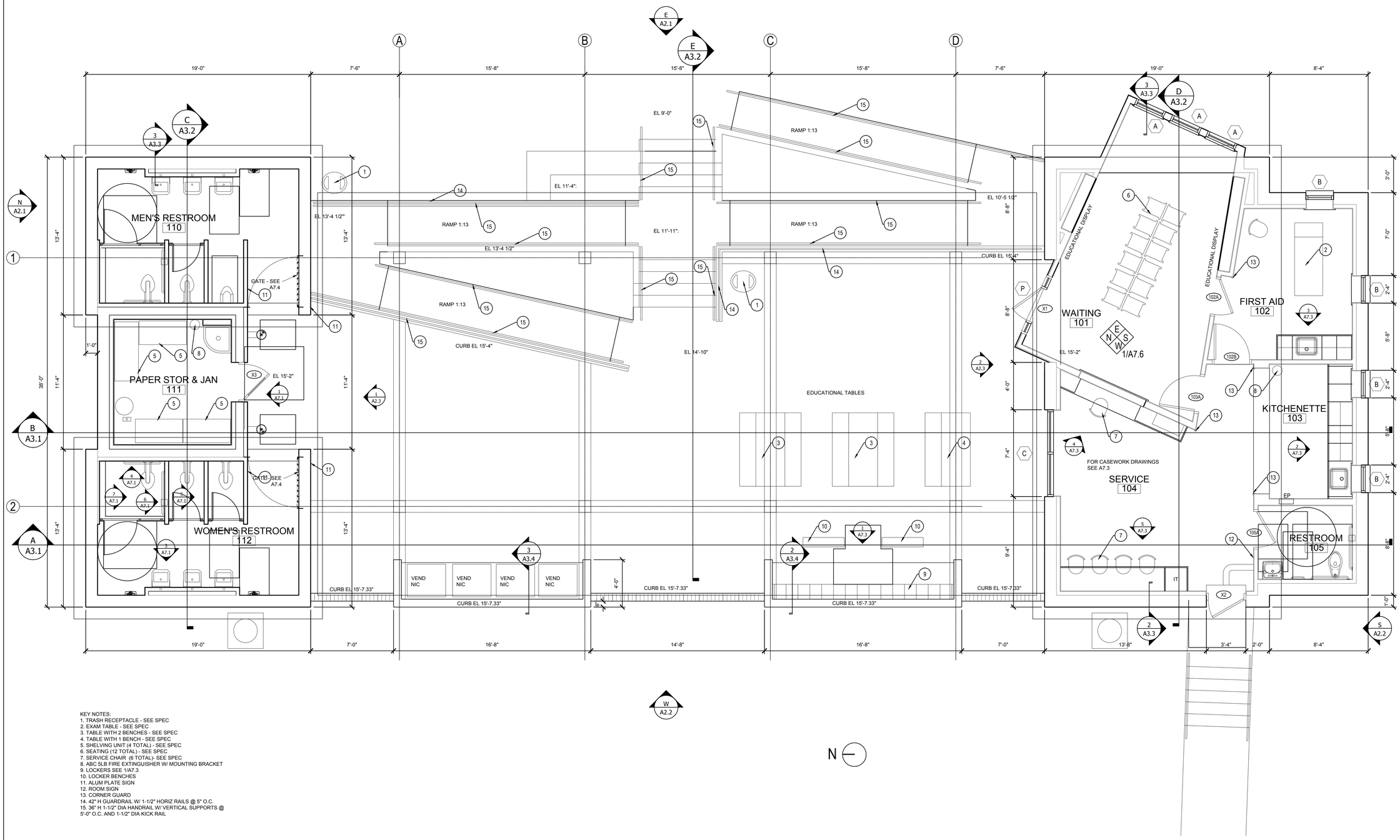

KEY NOTES:
1. TRASH RECEPTACLE - SEE SPEC
2. EXAM TABLE - SEE SPEC
3. TABLE WITH 2 BENCHES - SEE SPEC
4. TABLE WITH 1 BENCH - SEE SPEC
5. SHELVING UNIT (4 TOTAL) - SEE SPEC
6. SEATING (12 TOTAL) - SEE SPEC
7. SERVICE CHAIR (6 TOTAL)- SEE SPEC
8. ABC 5LB FIRE EXTINGUISHER W/ MOUNTING BRACKET
9. LOCKERS SEE 1/A7.3
10. LOCKER BENCHES
11. ALUM PLATE SIGN
12. ROOM SIGN
13. CORNER GUARD
14. 42" H GUARDRAIL W/ 1-1/2" HORIZ RAILS @ 5" O.C.
15. 36" H 1-1/2" DIA HANDRAIL W/ VERTICAL SUPPORTS @ 5'-0" O.C. AND 1-1/2" DIA KICK RAIL

UPPER LEVEL FLOOR PLAN

1/4" = 1'-0" | 1 | FLOOR PLAN

GALVESTON COUNTY
BEACH PAVILION
CRYSTAL BEACH, TX 77650

BE–Arc LLC Project No : C–17–003.01

BRAX EASTERWOOD DESIGN
architecture • planning

BRAX EASTERWOOD
DESIGN
2728 AVENUE Q SUITE 2
GALVESTON TEXAS 77550
PHONE 409–354–8976
EASTERWOOD@BEAIA.COM

ARCHITECT # 19694

SEAL

DATE	REVISION

CONTRACT DOCUMENTS

DATE ISSUED:
12/12/2017

COPYRIGHT 2017

A1.1

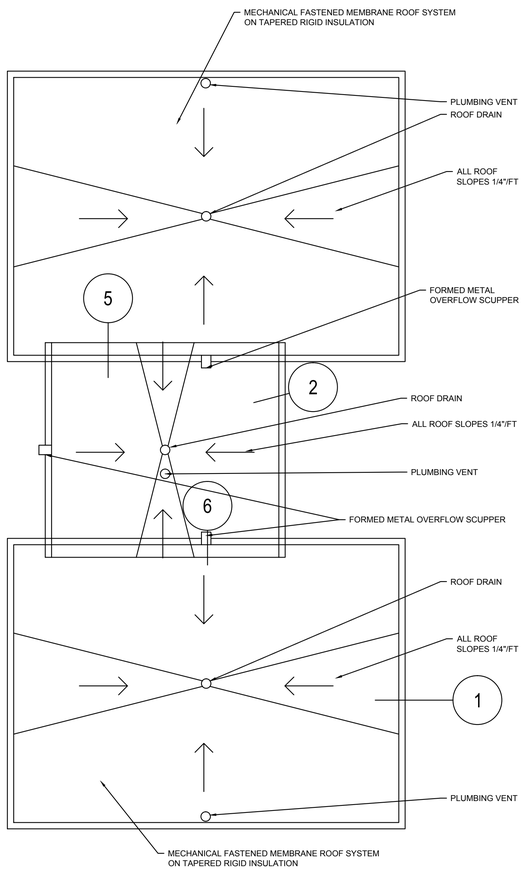

ROOF PLAN

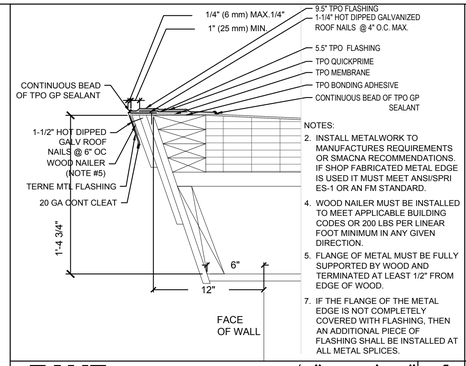

NOTES:

2. INSTALL METALWORK TO MANUFACTURES REQUIREMENTS OR SMACNA RECOMMENDATIONS. IF SHOP FABRICATED METAL EDGE IS USED IT MUST MEET ANSI/SPRI ES-1 OR AN FM STANDARD.
4. WOOD NAILER MUST BE INSTALLED TO MEET APPLICABLE BUILDING CODES OR 200 LBS PER LINEAR FOOT MINIMUM IN ANY GIVEN DIRECTION.
5. FLANGE OF METAL MUST BE FULLY SUPPORTED BY WOOD AND TERMINATED AT LEAST 1/2" FROM EDGE OF WOOD.
7. IF THE FLANGE OF THE METAL EDGE IS NOT COMPLETELY COVERED WITH FLASHING, THEN AN ADDITIONAL PIECE OF FLASHING SHALL BE INSTALLED AT ALL METAL SPLICES.

EAVE 1-1/2" = 1'-0" 1

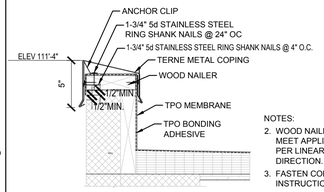

NOTES:

2. WOOD NAILER MUST BE INSTALLED TO MEET APPLICABLE BUILDING CODES OR 200 PER LINEAR FOOT LBS IN ANY GIVEN DIRECTION.
3. FASTEN COPING CLEAT AS PER SUPPLIED INSTRUCTIONS AND FASTENERS.
4. WHEN REINFORCEMENT OF TPO INSTRUCTIONS. MEMBRANE IS EXPOSED, REFER TO UT-LS-14 FOR CUT EDGE SEALANT APPLICATION.

COPING 1-1/2" = 1'-0" 2

NOTES:

2. WOOD NAILER MUST BE INSTALLED TO MEET APPLICABLE BUILDING CODES OR 200 PER LINEAR FOOT LBS IN ANY GIVEN DIRECTION.
3. FASTEN COPING CLEAT AS PER SUPPLIED INSTRUCTIONS AND FASTENERS.
4. WHEN REINFORCEMENT OF TPO INSTRUCTIONS. MEMBRANE IS EXPOSED, REFER TO UT-LS-14 FOR CUT EDGE SEALANT APPLICATION.

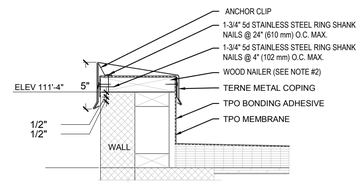

COPING 1-1/2" = 1'-0" 3

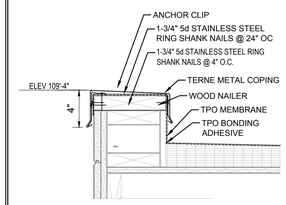

NOTES:

2. WOOD NAILER MUST BE INSTALLED TO MEET APPLICABLE BUILDING CODES OR 200 PER LINEAR FOOT LBS IN ANY GIVEN DIRECTION.
3. FASTEN COPING CLEAT AS PER SUPPLIED INSTRUCTIONS AND FASTENERS.
4. WHEN REINFORCEMENT OF TPO INSTRUCTIONS. MEMBRANE IS EXPOSED, REFER TO UT-LS-14 FOR CUT EDGE SEALANT APPLICATION.

COPING 1-1/2" = 1'-0" 4

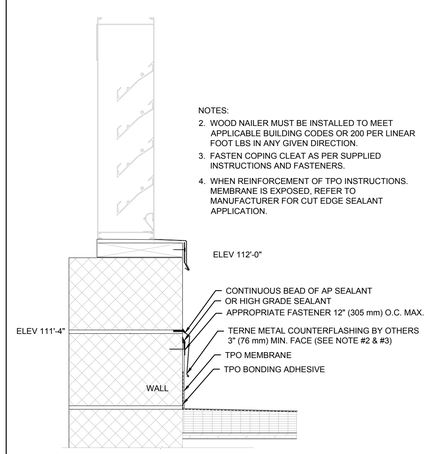

NOTES:

2. WOOD NAILER MUST BE INSTALLED TO MEET APPLICABLE BUILDING CODES OR 200 PER LINEAR FOOT LBS IN ANY GIVEN DIRECTION.
3. FASTEN COPING CLEAT AS PER SUPPLIED INSTRUCTIONS AND FASTENERS.
4. WHEN REINFORCEMENT OF TPO INSTRUCTIONS. MEMBRANE IS EXPOSED, REFER TO MANUFACTURER FOR CUT EDGE SEALANT APPLICATION.

WALL 1-1/2" = 1'-0" 5

NOTES:

2. INSTALL METALWORK TO MANUFACTURES REQUIREMENTS OR SMACNA RECOMMENDATIONS. IF SHOP FABRICATED METAL EDGE IS USED IT MUST MEET ANSI/SPRI ES-1 OR AN FM STANDARD.
3. GP SEALANT IS REQUIRED ALONG FLASHING WHEN ROOF SLOPE IS 1" PER FOOT OR GREATER.
4. WOOD NAILER MUST BE INSTALLED TO MEET APPLICABLE BUILDING CODES OR 200 LBS PER LINEAR FOOT MINIMUM IN ANY GIVEN DIRECTION.
5. FLANGE OF METAL MUST BE FULLY SUPPORTED BY WOOD AND TERMINATED AT LEAST 1/2" FROM EDGE OF WOOD.
7. IF THE FLANGE OF THE METAL EDGE IS NOT COMPLETELY COVERED WITH FLASHING, THEN AN ADDITIONAL PIECE OF FLASHING SHALL BE INSTALLED AT ALL METAL SPLICES.

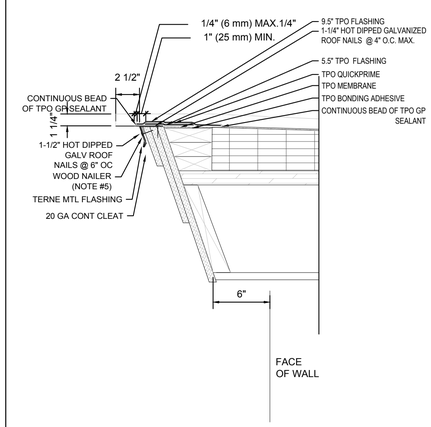

SCUPPER 1-1/2" = 1'-0" 6

COUNTY APPROVAL:
SIGNATURE _____ DATE_____

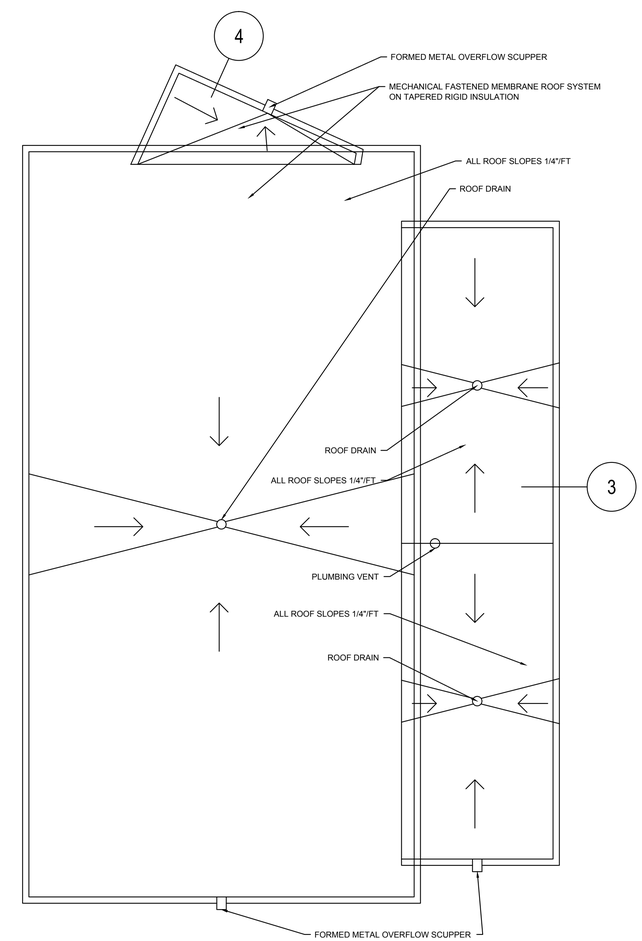

1/4" = 1'-0" 1

ROOF PLAN

GALVESTON COUNTY
BEACH PAVILION
CRYSTAL BEACH, TX 77650

BE–Arc LLC Project No : C–17–003.01

BRAX EASTERWOOD DESIGN
architecture + planning

BRAX EASTERWOOD
DESIGN
2728 AVENUE Q SUITE 2
GALVESTON TEXAS 77550
PHONE 409–354–8976
EASTERWOOD@BEAIA.COM

ARCHITECT # 19694

SEAL

DATE	REVISION

CONTRACT DOCUMENTS

DATE ISSUED:
12/12/2017

COPYRIGHT 2017

A1.3

COUNTY APPROVAL:
SIGNATURE _____ DATE_____

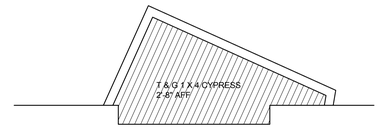

EXTERIOR CEILING UNDER BAY WINDOW

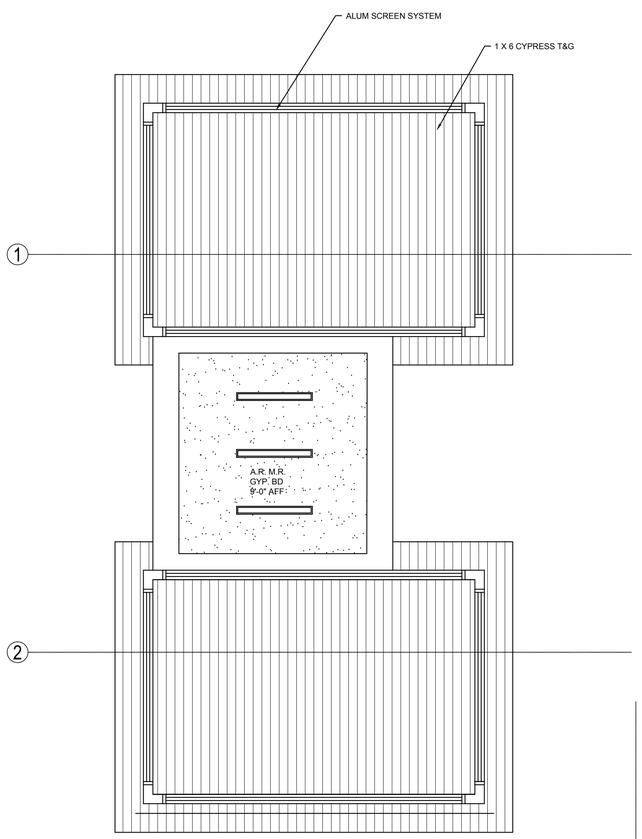

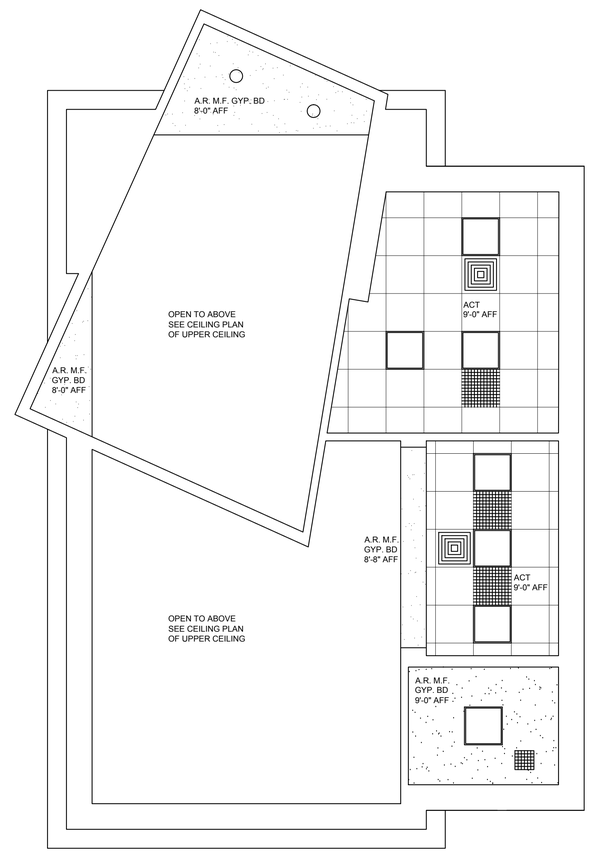

LOWER CEILING PLAN

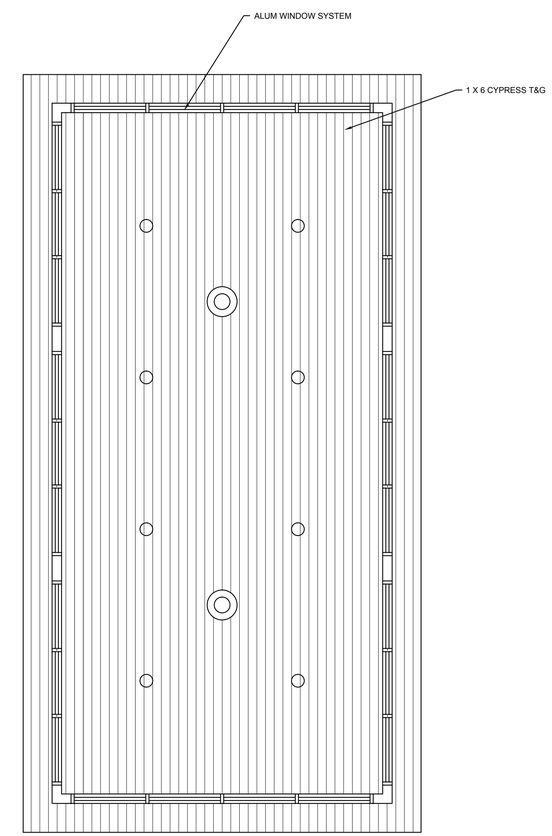

UPPER CEILING PLAN

REFLECTED CEILING PLAN

1/4" = 1'-0" | 1

GALVESTON COUNTY
BEACH PAVILION
CRYSTAL BEACH, TX 77650

BE-Arc LLC Project No : C-17-003.01

BRAX EASTERWOOD DESIGN
architecture + planning

BRAX EASTERWOOD
DESIGN
2728 AVENUE Q, SUITE 2
GALVESTON TEXAS 77550
PHONE 409-354-8976
EASTERWOOD@BEAIA.COM

ARCHITECT # 19694

SEAL

DATE	REVISION

CONTRACT DOCUMENTS

DATE ISSUED:
12/12/2017

COPYRIGHT 2017

A1.4

REFLECTED CEILING PLAN

COUNTY APPROVAL:
SIGNATURE _____ DATE_____

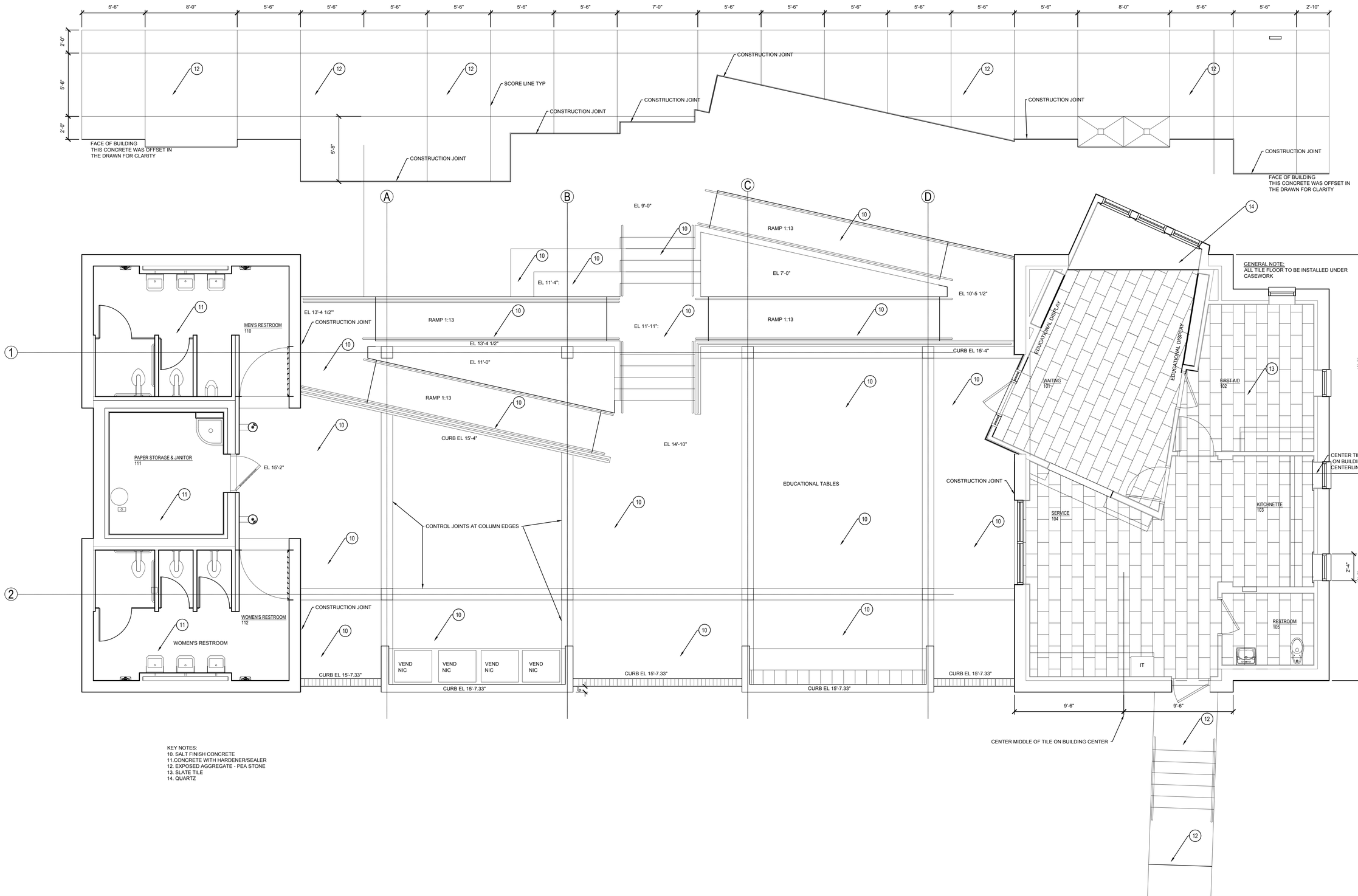

KEY NOTES:
10. SALT FINISH CONCRETE
11.CONCRETE WITH HARDENER/SEALER
12. EXPOSED AGGREGATE - PEA STONE
13. SLATE TILE
14. QUARTZ

FLOOR PATTERN - FLOOR PLAN

1/4" = 1'-0" | 1

FLOOR PLAN

GALVESTON COUNTY
BEACH PAVILION
CRYSTAL BEACH, TX 77650

BE–Arc LLC Project No : C–17–003.01

BRAX EASTERWOOD DESIGN
architecture + planning

BRAX EASTERWOOD
DESIGN
2728 AVENUE Q SUITE 2
GALVESTON TEXAS 77550
PHONE 409-354-8976
EASTERWOOD@BEAIA.COM

ARCHITECT # 19694

SEAL

DATE	REVISION

CONTRACT DOCUMENTS

DATE ISSUED:
12/12/2017

COPYRIGHT 2017

A1.6

COUNTY APPROVAL:
SIGNATURE _____ DATE_____

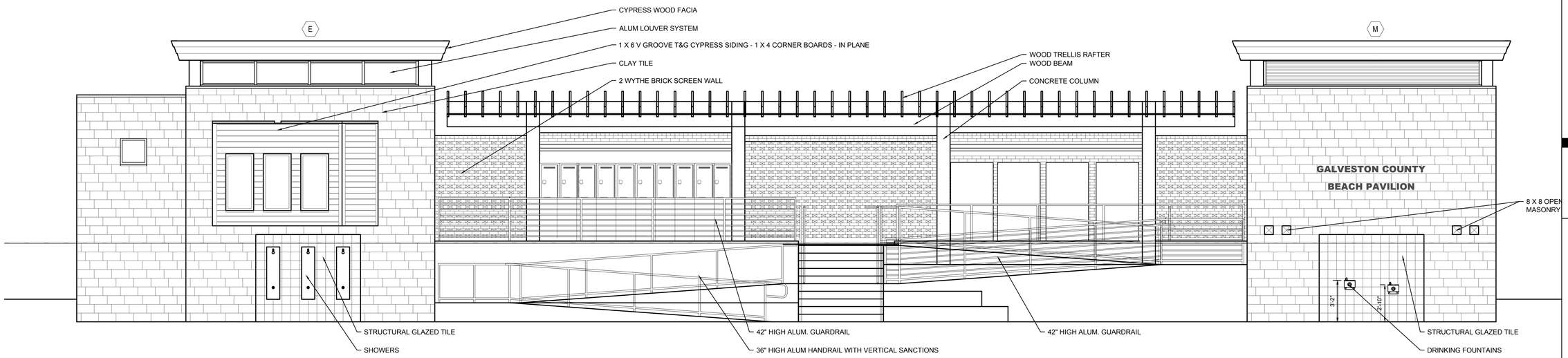

EAST ELEVATION

1/4" = 1'-0" **E**

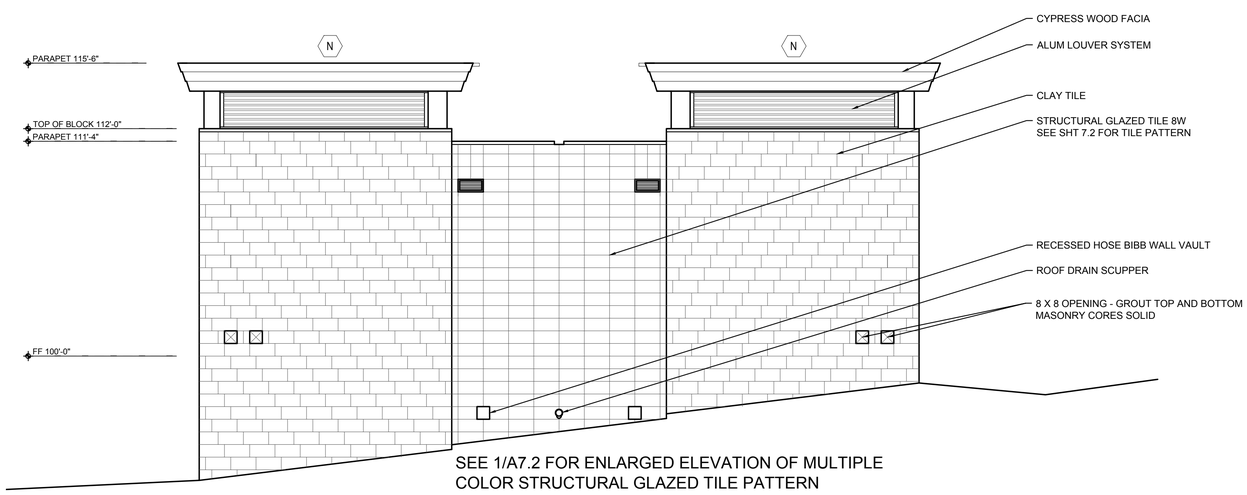

SEE 1/A7.2 FOR ENLARGED ELEVATION OF MULTIPLE COLOR STRUCTURAL GLAZED TILE PATTERN

NORTH ELEVATION

1/4" = 1'-0" **N**

1 EXTERIOR SIGNAGE
Scale: 1/2" = 1'-0"

GALVESTON COUNTY
BEACH PAVILION
CRYSTAL BEACH, TX 77650

BE–Arc LLC Project No : C–17–003.01

BRAX EASTERWOOD DESIGN
architecture + planning

BRAX EASTERWOOD
DESIGN
2728 AVENUE Q SUITE 2
GALVESTON TEXAS 77550
PHONE 409–354–6976
EASTERWOOD@BEAIA.COM

ARCHITECT # 19694

SEAL

DATE	REVISION

CONTRACT DOCUMENTS

DATE ISSUED:
12/12/2017

COPYRIGHT 2017

A2.1

ELEVATIONS

COUNTY APPROVAL:
SIGNATURE _____ DATE_____

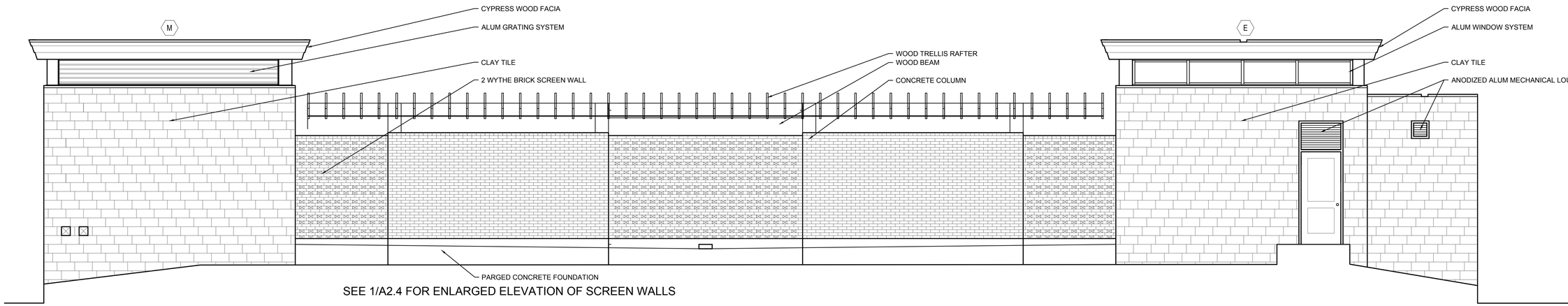

SEE 1/A2.4 FOR ENLARGED ELEVATION OF SCREEN WALLS

WEST ELEVATION

1/4" = 1'-0" | W

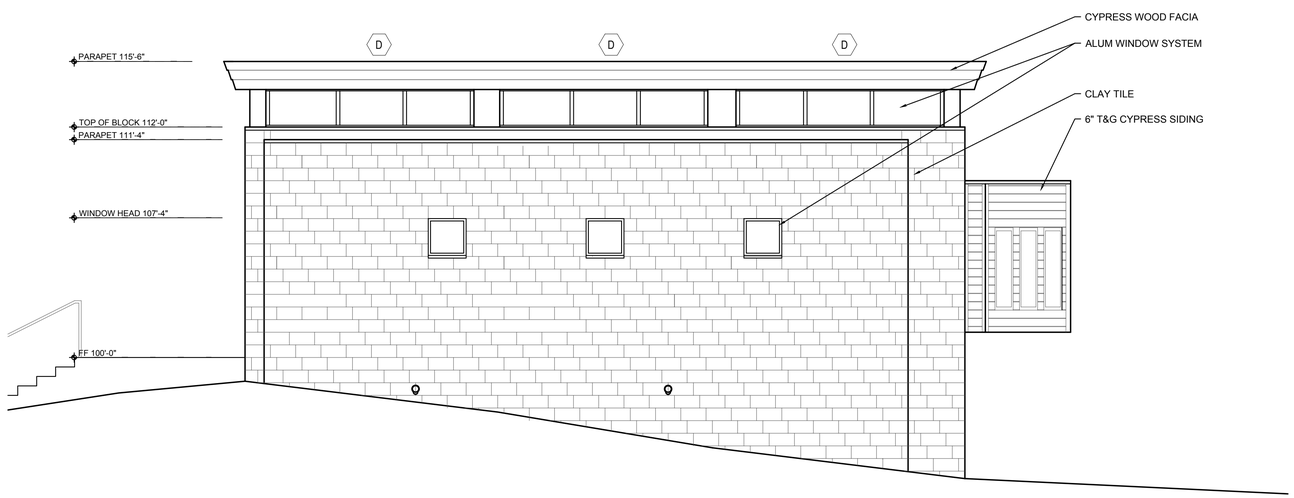

SOUTH ELEVATION

1/4" = 1'-0" | S

GALVESTON COUNTY
BEACH PAVILION
CRYSTAL BEACH, TX 77650

BE-Arc LLC Project No : C-17-003.01

BRAX EASTERWOOD DESIGN
architecture + planning

BRAX EASTERWOOD
DESIGN
2728 AVENUE Q SUITE 2
GALVESTON TEXAS 77550
PHONE 409-354-8976
EASTERWOOD@BEAIA.COM

ARCHITECT # 19694

SEAL

DATE	REVISION

CONTRACT DOCUMENTS

DATE ISSUED:
12/12/2017

COPYRIGHT 2017

A2.2

ELEVATIONS

COUNTY APPROVAL:
SIGNATURE _____ DATE_____

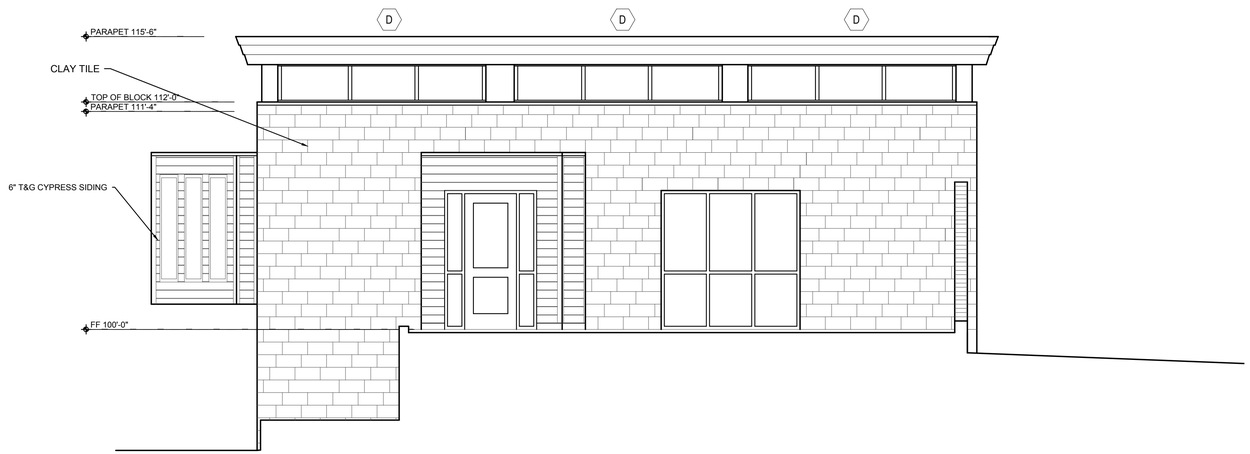

NORTH ELEVATION OF VISTOR'S CENTER

1/4" = 1'-0" | 2

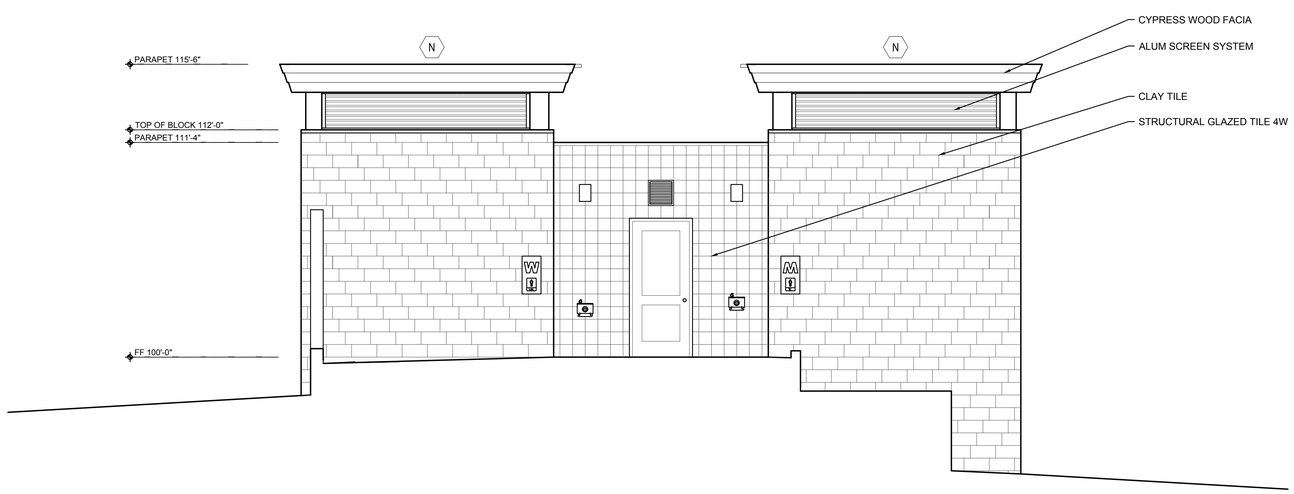

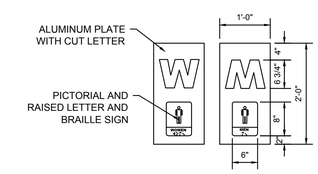

- ALUMINIUM PLATE SIGNAGE
Scale: 3/4" = 1'-0"

SOUTH ELEVATION OF RESTROOM

1/4" = 1'-0" | 1

GALVESTON COUNTY
BEACH PAVILION
CRYSTAL BEACH, TX 77650

BE–Arc LLC Project No : C–17–003.01

BRAX EASTERWOOD DESIGN
architecture + planning

BRAX EASTERWOOD
DESIGN
2728 AVENUE Q SUITE 2
GALVESTON TEXAS 77550
PHONE 409–354–8976
EASTERWOOD@BEAIA.COM

ARCHITECT # 19694

SEAL

DATE	REVISION

CONTRACT DOCUMENTS

DATE ISSUED:
12/12/2017

COPYRIGHT 2017

A2.3

ELEVATIONS

COUNTY APPROVAL:
SIGNATURE _____ DATE_____

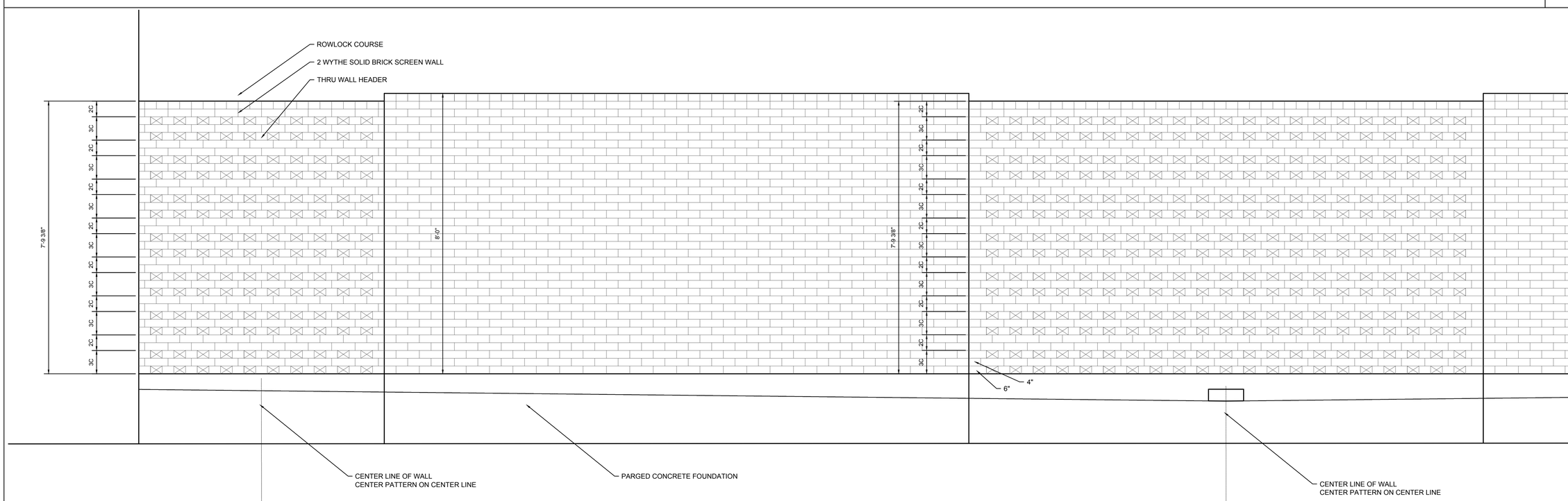

PARTIAL ELEVATION OF SCREEN WALL

3/4" = 1'-0" | 1

GALVESTON COUNTY
BEACH PAVILION
CRYSTAL BEACH, TX 77650

BE-Arc LLC Project No : C-17-003.01

BRAX EASTERWOOD DESIGN
architecture + planning

BRAX EASTERWOOD
DESIGN
2728 AVENUE Q SUITE 2
GALVESTON TEXAS 77550
PHONE 409-354-8976
EASTERWOOD@BEAIA.COM

ARCHITECT # 19694

SEAL

DATE	REVISION

CONTRACT DOCUMENTS

DATE ISSUED:
12/12/2017

COPYRIGHT 2017

A2.4

ELEVATIONS

COUNTY APPROVAL:
SIGNATURE _____ DATE_____

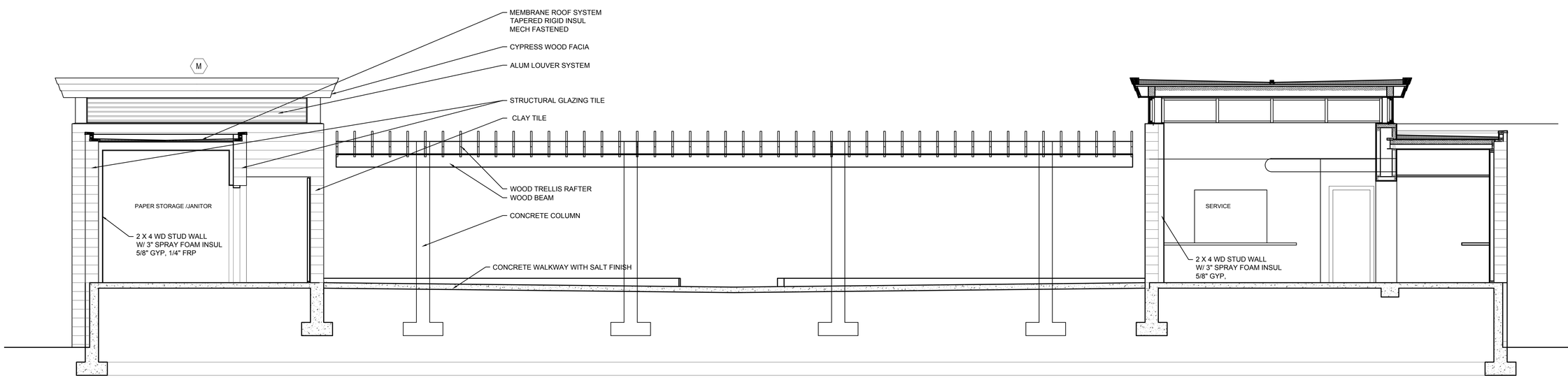

BUILDING SECTION 1/4" = 1'-0" **B**

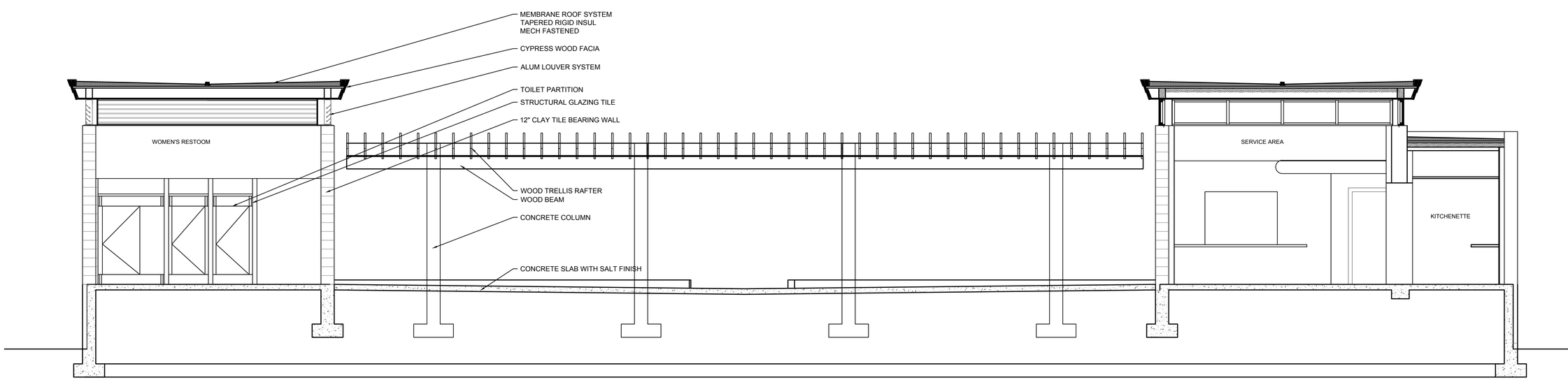

BUILDING SECTION 1/4" = 1'-0" **A**

GALVESTON COUNTY
BEACH PAVILION
CRYSTAL BEACH, TX 77650

BE-Arc LLC Project No : C-17-003.01

BRAX EASTERWOOD DESIGN
architecture + planning

BRAX EASTERWOOD
DESIGN
2728 AVENUE Q SUITE 2
GALVESTON TEXAS 77550
PHONE 409-354-8976
EASTERWOOD@BEAIA.COM

ARCHITECT # 19694

SEAL

DATE	REVISION

CONTRACT DOCUMENTS

DATE ISSUED:
12/12/2017

COPYRIGHT 2017

A3.1

SECTIONS

COUNTY APPROVAL:
SIGNATURE _____ DATE_____

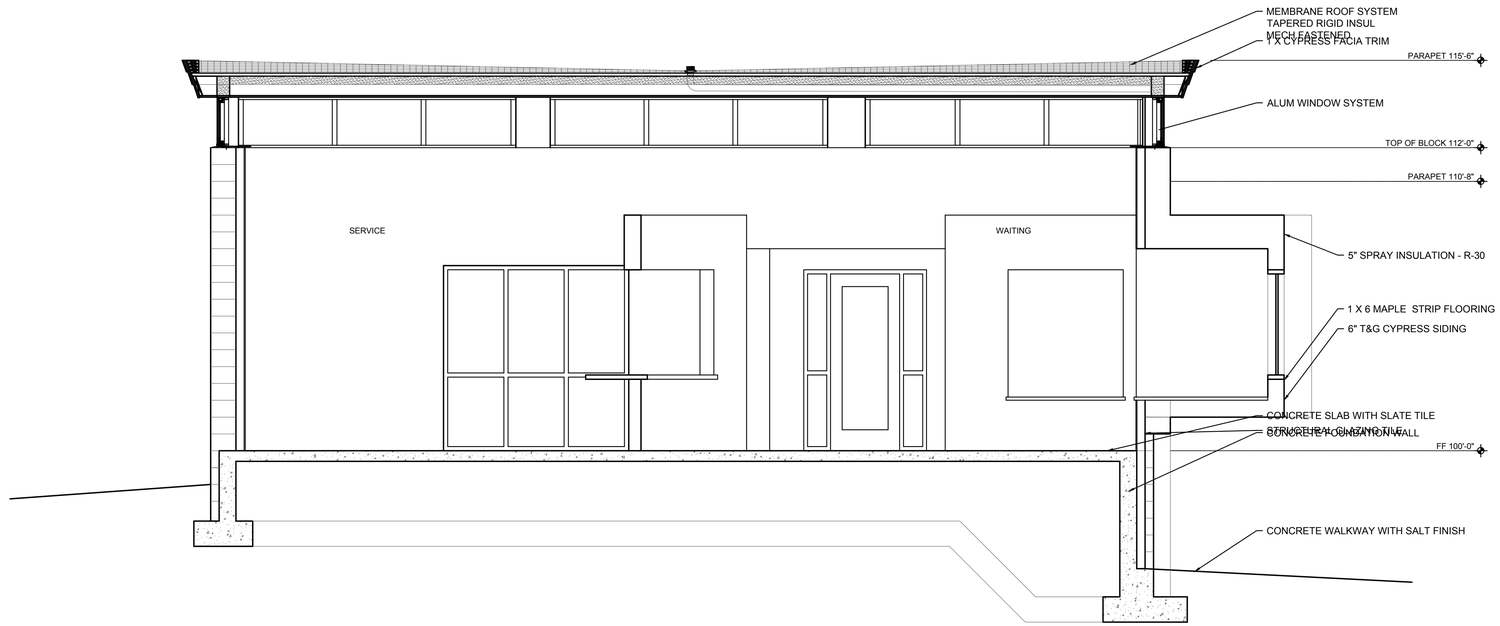

BUILDING SECTION 3/8" = 1'-0" **D**

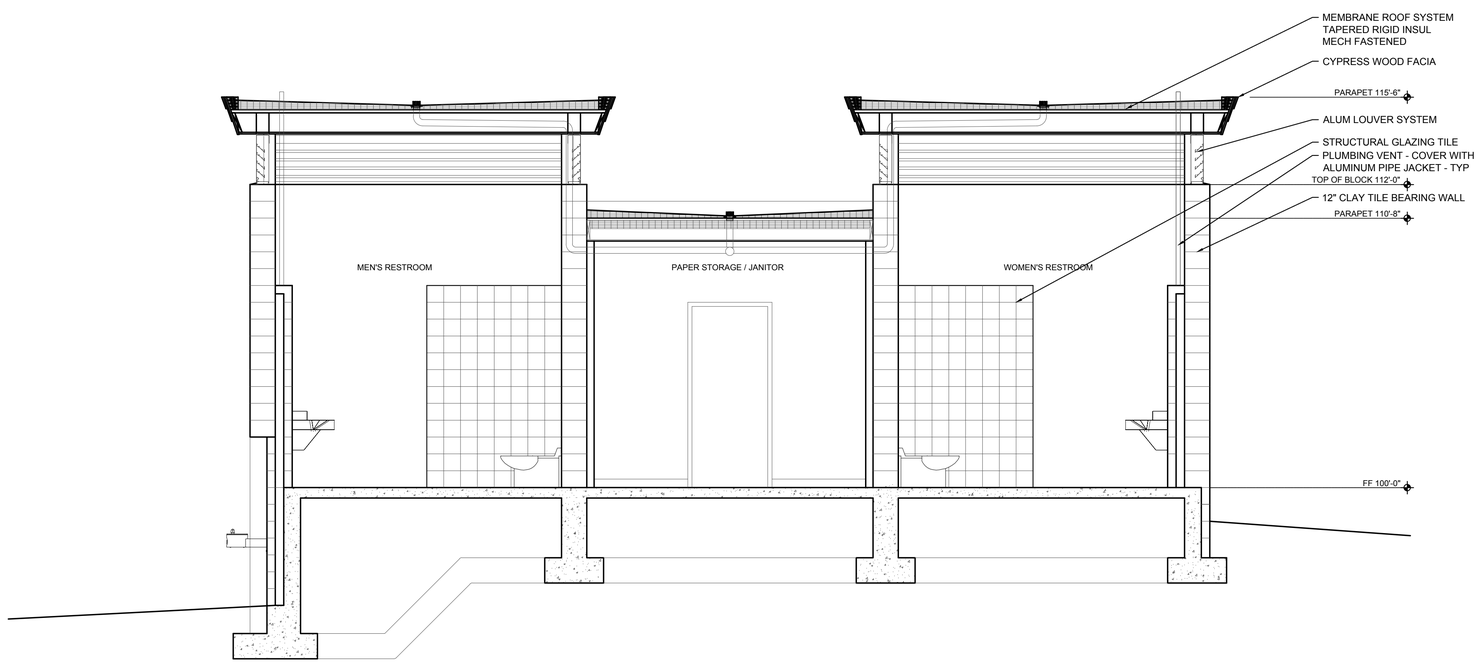

BUILDING SECTION 3/8" = 1'-0" **C**

GALVESTON COUNTY
BEACH PAVILION
CRYSTAL BEACH, TX 77650

BE-Arc LLC Project No : C-17-003.01

BRAX EASTERWOOD DESIGN
architecture + planning

BRAX EASTERWOOD
DESIGN
2728 AVENUE Q SUITE 2
GALVESTON TEXAS 77550
PHONE 409-354-6976
EASTERWOOD@BEAIA.COM

ARCHITECT # 19694

SEAL

DATE	REVISION

CONTRACT DOCUMENTS

DATE ISSUED:
12/12/2017

COPYRIGHT 2017

A3.2

SECTIONS

COUNTY APPROVAL:
SIGNATURE _____ DATE_____

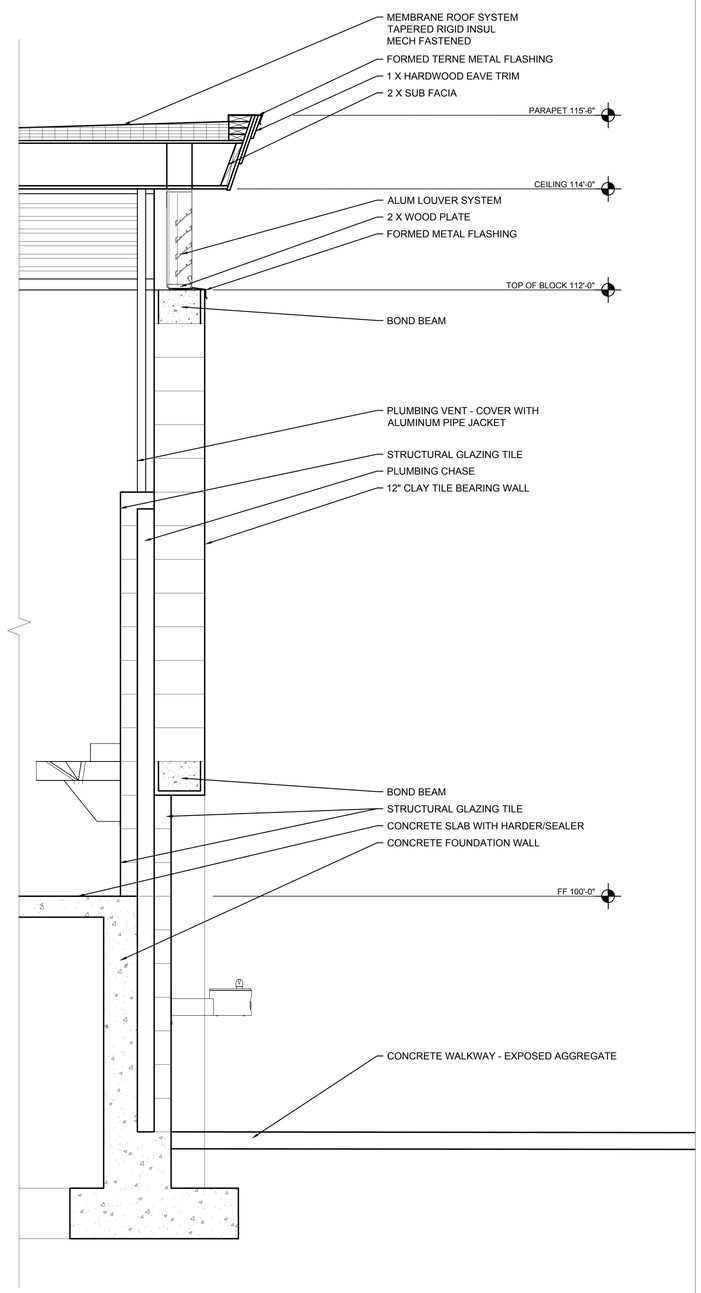

WALL SECTION 3/4" = 1'-0" **3**

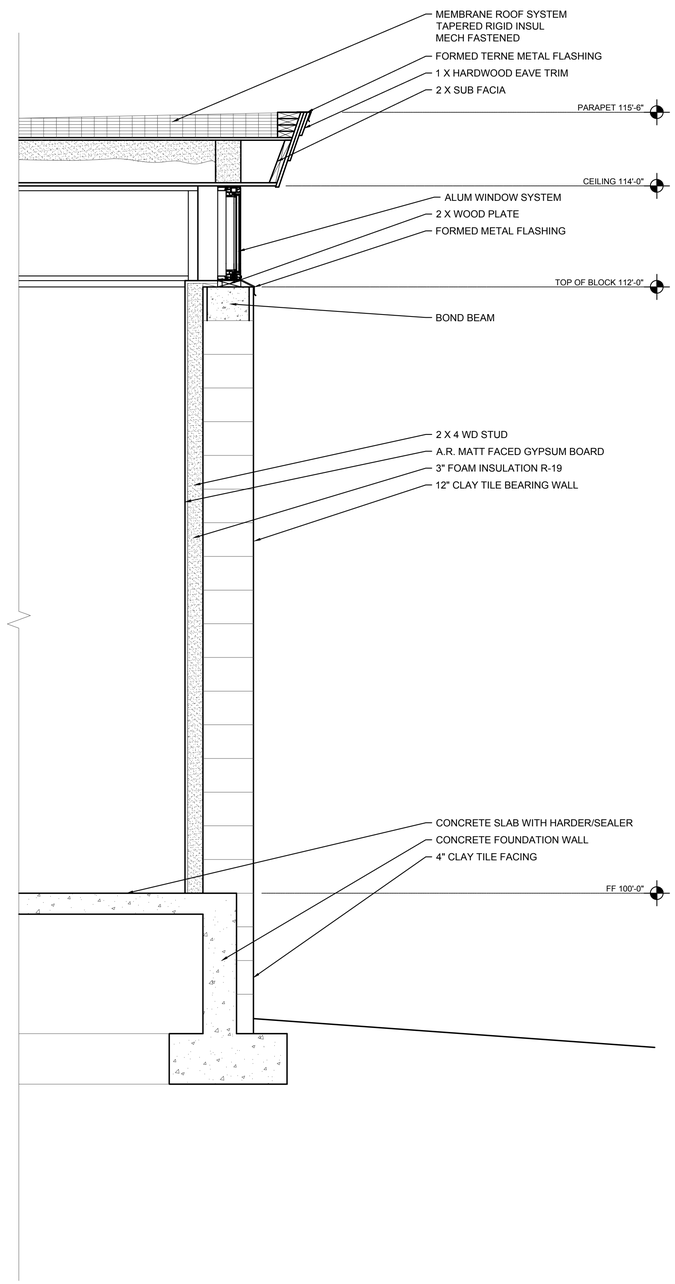

WALL SECTION 3/4" = 1'-0" **2**

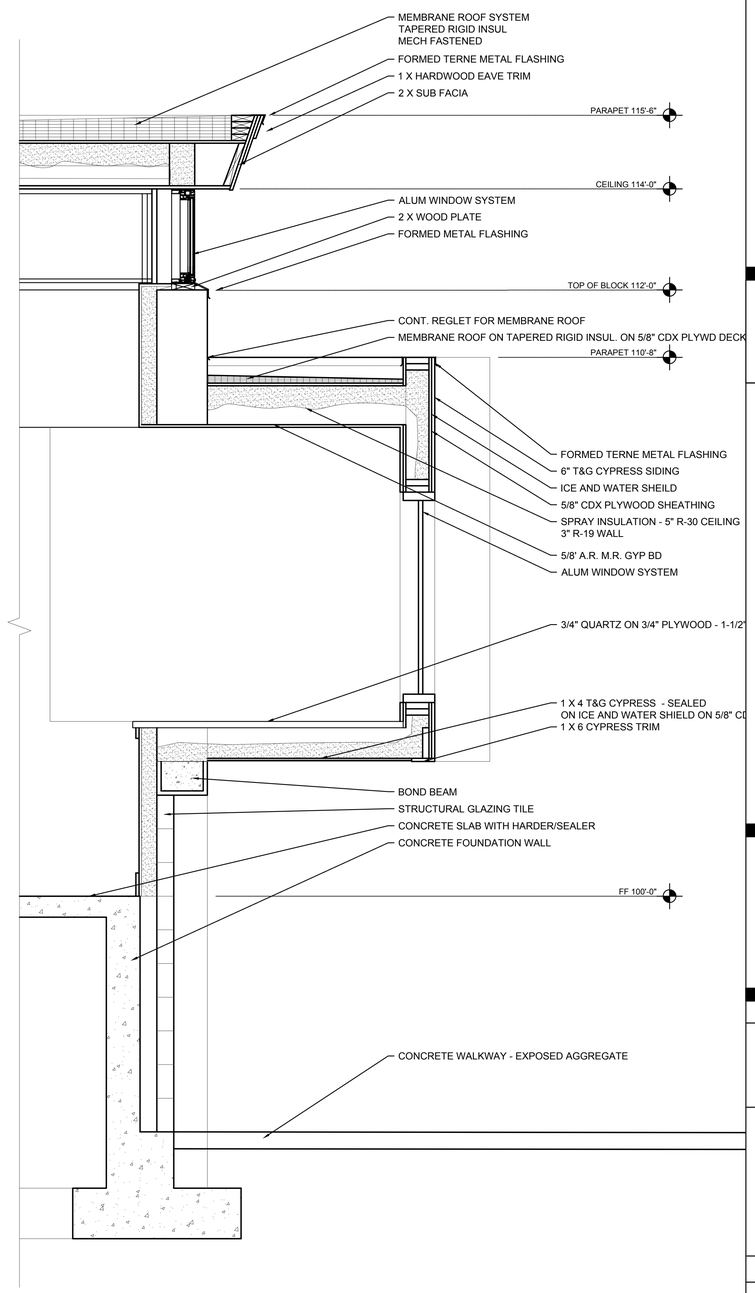

WALL SECTION 3/4" = 1'-0" **1**

GALVESTON COUNTY
BEACH PAVILION
CRYSTAL BEACH, TX 77650

BE–Arc LLC Project No : C–17–003.01

BRAX EASTERWOOD DESIGN
architecture + planning

BRAX EASTERWOOD
DESIGN
2728 AVENUE Q SUITE 2
GALVESTON TEXAS 77550
PHONE 409-354-8976
EASTERWOOD@BEAIA.COM

ARCHITECT # 19694

SEAL

DATE	REVISION

CONTRACT DOCUMENTS

DATE ISSUED:
12/12/2017

COPYRIGHT 2017

A3.3

SECTIONS

COUNTY APPROVAL:
SIGNATURE _____ DATE_____

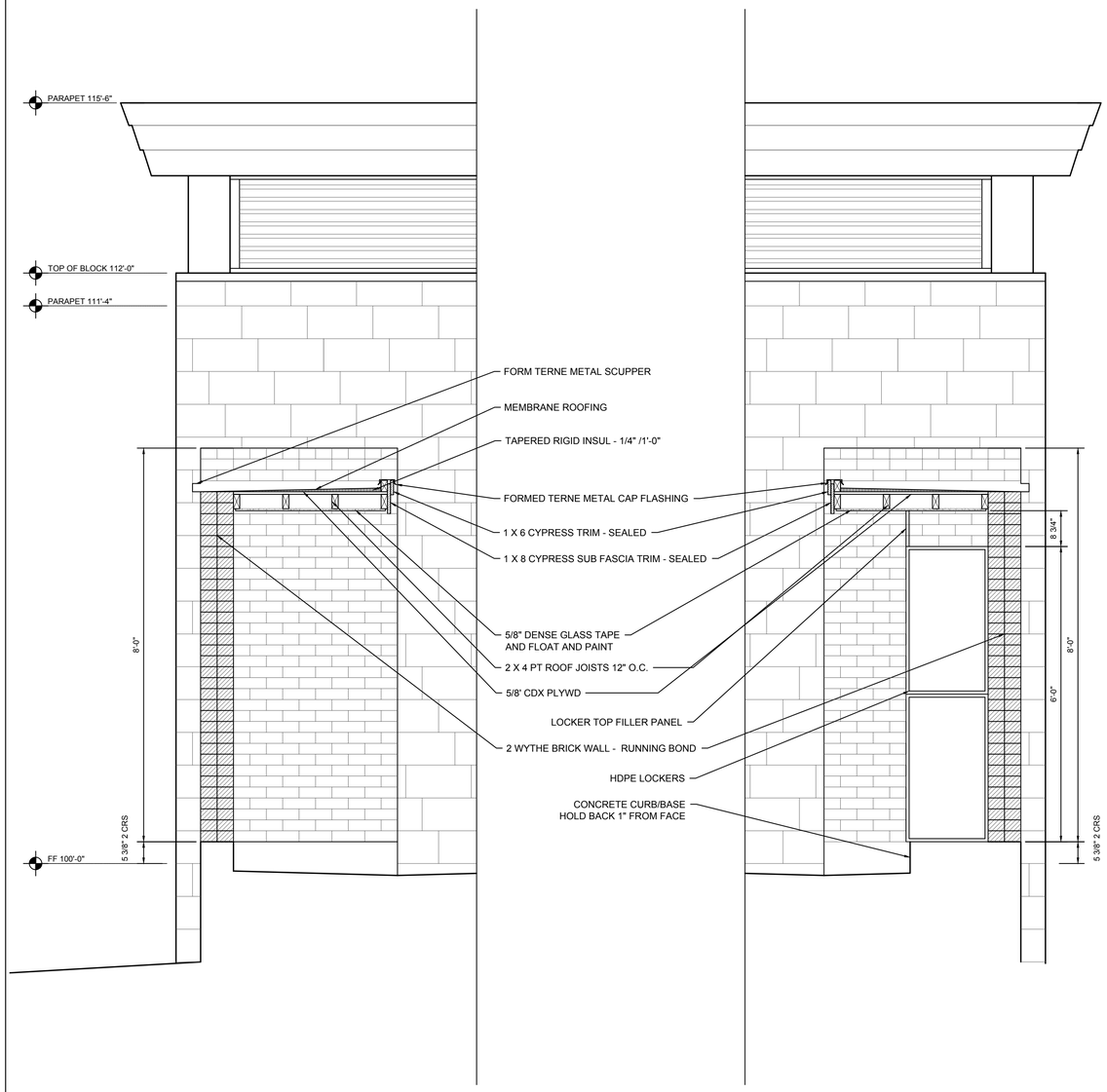

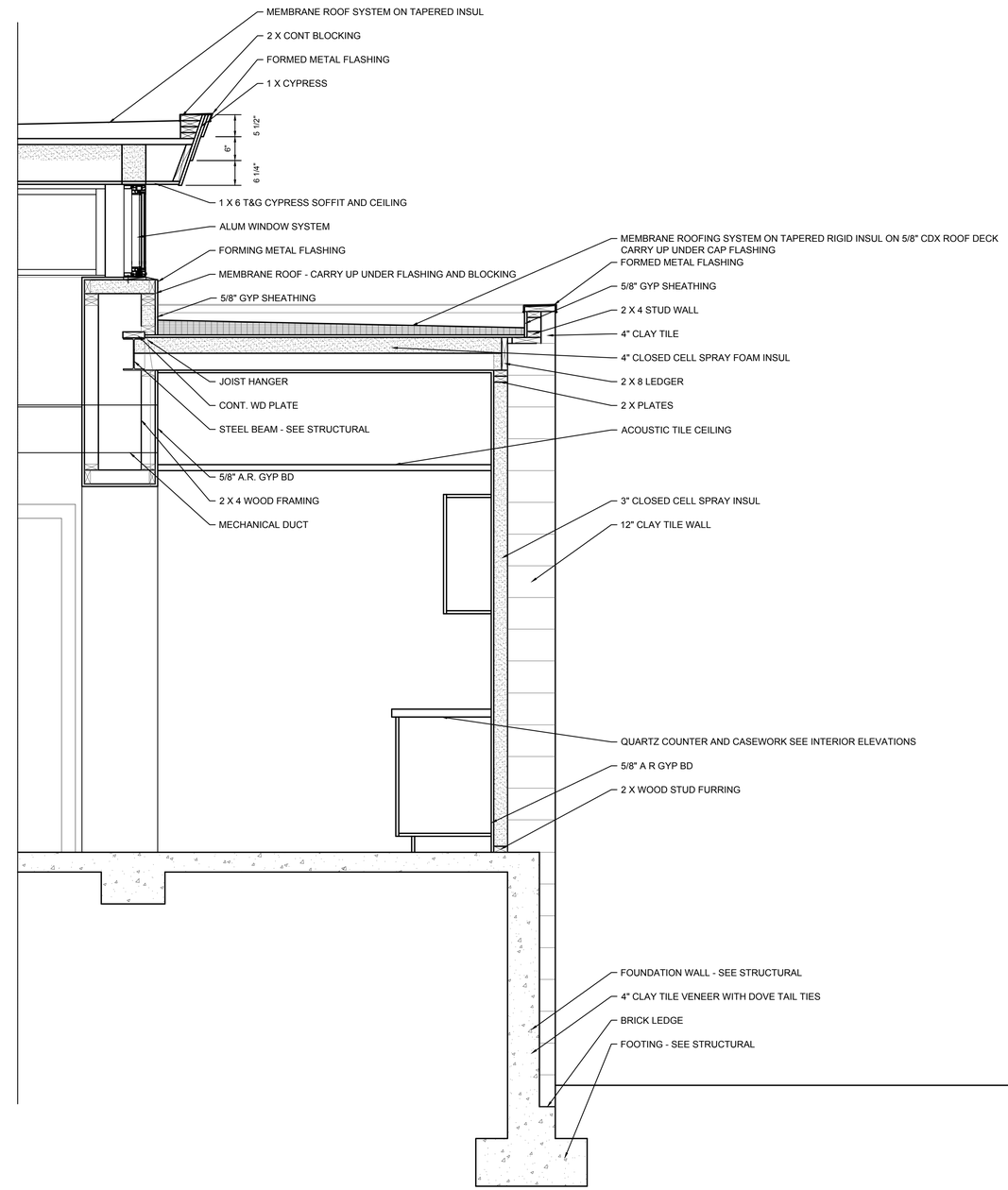

WALL SECTION 3/4" = 1'-0" | **3**

WALL SECTION 3/4" = 1'-0" | **2**

WALL SECTION 3/4" = 1'-0" | **1**

GALVESTON COUNTY BEACH PAVILION CRYSTAL BEACH, TX 77650

BE–Arc LLC Project No : C–17–003.01

BRAX EASTERWOOD DESIGN
architecture + planning

BRAX EASTERWOOD
DESIGN
2728 AVENUE Q SUITE 2
GALVESTON TEXAS 77550
PHONE 409–354–8976
EASTERWOOD@BEAIA.COM

ARCHITECT # 19694

SEAL

DATE	REVISION

CONTRACT DOCUMENTS

DATE ISSUED:
12/12/2017

COPYRIGHT 2017

A3.4

SECTIONS

COUNTY APPROVAL:
SIGNATURE _____ DATE_____

ROOM FINISH SCHEDULE

NUMBER	ROOM NAME	WALLS – NORTH: PAINTED M.R. GWB	STRUCTURAL GLAZED TILE	CLAY TILE	WOOD PANEL WAINSCOAT	FIBERGLASS REINFORCED PANEL	PAINTED A.R. GWB	EAST: PAINTED M.R. GWB	STRUCTURAL GLAZED TILE	CLAY TILE	WOOD PANEL WAINSCOAT	FIBERGLASS REINFORCED PANEL	PAINTED A.R. GWB	SOUTH: PAINTED M.R. GWB	STRUCTURAL GLAZED TILE	CLAY TILE	WOOD PANEL WAINSCOAT	FIBERGLASS REINFORCED PANEL	PAINTED A.R. GWB	WEST: PAINTED M.R. GWB	STRUCTURAL GLAZED TILE	CLAY TILE	WOOD PANEL WAINSCOAT	FIBERGLASS REINFORCED PANEL	PAINTED A.R. GWB	FLOOR MATERIAL: SEALED CONCRETE	SLATE	-	-	BASE MATERIAL: SEALED WOOD - CYPRESS	RUBBER	NONE	CEILING MATERIAL: A.R. GWB	1 X 4 CYPRESS T & G WOOD	M.R. GYP ON CEILING	ACT	NOTES:
101	WAITING				X		X				X		X				X		X				X		X		X			X				X			
102	FIRST AID						X						X						X						X		X			X						X	
103	KITCHENETTE						X						X						X						X		X			X						X	
104	SERVICE						X						X						X						X		X			X				X			
105	RESTROOM	X						X						X						X							X			X					X		
110	MEN'S RESTROOM		X	X					X	X						X					X	X				X						X		X			
111	PAPER STORAGE/ JANITOR					X						X						X						X		X					X				X		
112	WOMEN'S RESTROOM		X	X					X	X						X					X	X				X						X		X			

Door Schedule

	Room	Door: Rating	Elevation	Width	Height	Thickness	Material	Frame: Elevation	Material	Details: Head	Jamb	Sill	Notes
101A	FIRST AID		A	3'-0"	7'-0"	1-3/4"	WD	A	AL	1	2	11	
101B	FIRST AID		A	3'-0"	7'-0"	1-3/4"	WD	A	AL	1	2	11	
103A	SERVICE		A	3'-0"	7'-0"	1-3/4"	WD	A	AL	1	2	11	
105A	RESTROOM		A	3'-0"	7'-0"	1-3/4"	WD	A	AL	1	2	11	
X1	WAITING		A	3'-0"	7'-0"	1-3/4"	AL	B	AL	3 SIM	3	10	
X2	SERVICE EAST		B	3'-0"	7'-0"	1-3/4"	AL	C	AL	8 SIM	7	10	
X3	PAPER STORAGE		B	3'-0"	7'-2"	1-3/4"	AL	C	AL	8	6	10	

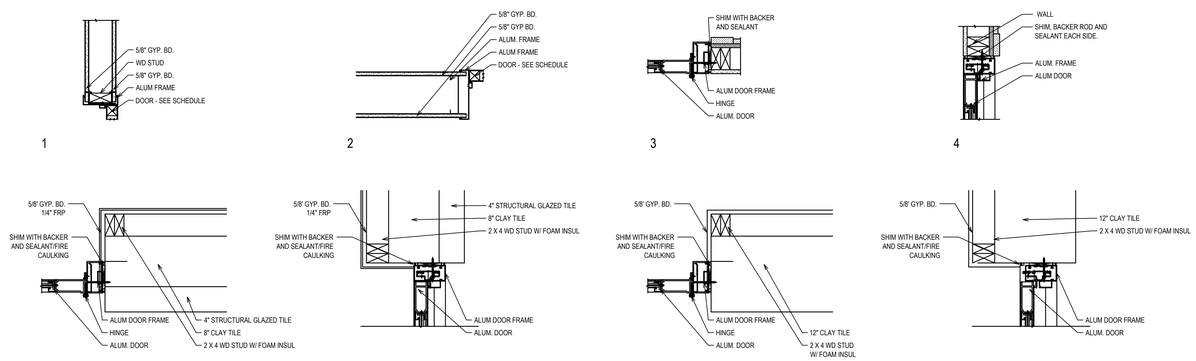

DOOR DETAILS

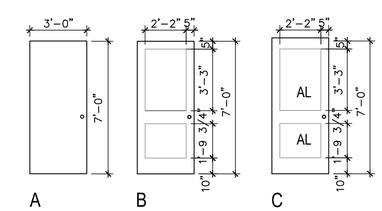

DOOR ELEVATIONS

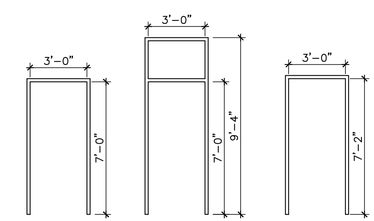

FRAME ELEVATIONS

GALVESTON COUNTY
BEACH PAVILION
CRYSTAL BEACH, TX 77650

BE–Arc LLC Project No : C–17–003.01

BRAX EASTERWOOD DESIGN
architecture + planning

BRAX EASTERWOOD
DESIGN
2728 AVENUE Q SUITE 2
GALVESTON TEXAS 77550
PHONE 409–354–8976
EASTERWOOD@BEAIA.COM

ARCHITECT # 19694

SEAL

DATE	REVISION

CONTRACT DOCUMENTS

DATE ISSUED:
12/12/2017

COPYRIGHT 2017

A6.1

WINDOW SCHEDULE

EXTERIOR						
TYPE	HEIGHT	WIDTH	MATERIAL	DETAIL	SILL HEIGHT	NOTES
A	4'-4"	2'-8"	AL	2/3/4	2'-10" AB 100'	
B	1'-11"	1'-11 1/4"	AL	2/3/4 SIM.	5'-4-1/2" AB 100'	
C	1'-11"	1'-11 1/4"	AL	2/3/4	0'-4" AB 100'	
D	1'-11"	11'-8"	AL	2/3/4 SIM.	12'-0 5/8" AB 100'	
E	1'-11"	17'-4"	AL	2/3/4	12'-0 5/8" AB 100'	
M	1'-11 3/8"	17'-4 11/16"	AL	2/3/4 SIM.	12'-0 5/8" AB 100'	ALUM SCREEN LOUVER
N	1'-11 3/8"	11'-8 11/16"	AL	2/3/4	12'-0 5/8" AB 100'	ALUM SCREEN LOUVER
P	7'-2"	5'-4"	AL	2/3/4	0" AB 100'	

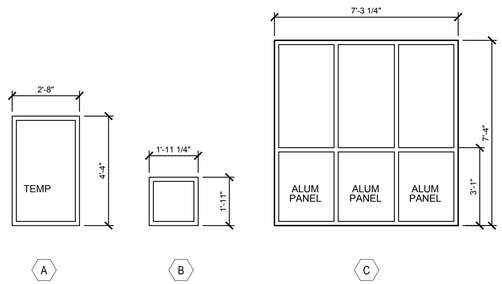

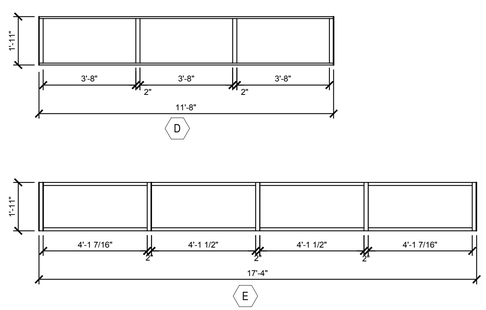

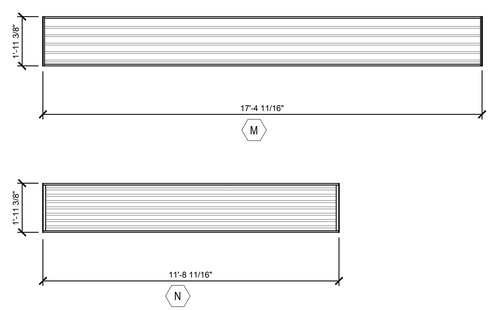

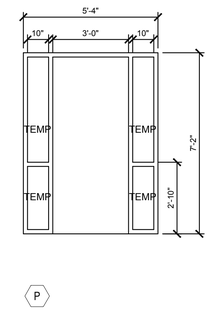

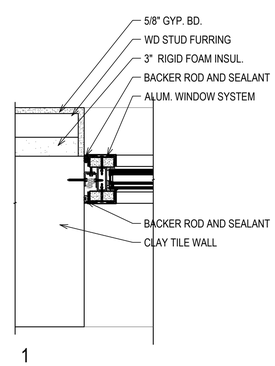

1

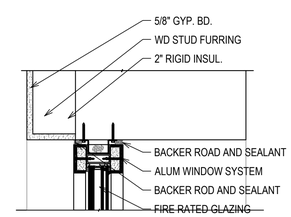

2

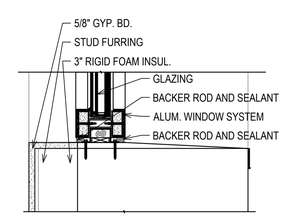

3

COUNTY APPROVAL:
SIGNATURE _____ DATE_____

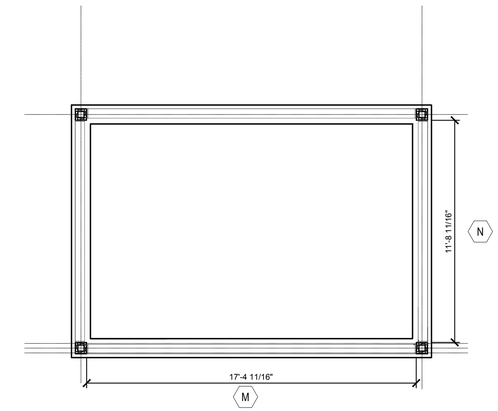

1 UPPER PLAN RESTROOM PAVILLION
Scale: 1/4" = 1'-0"

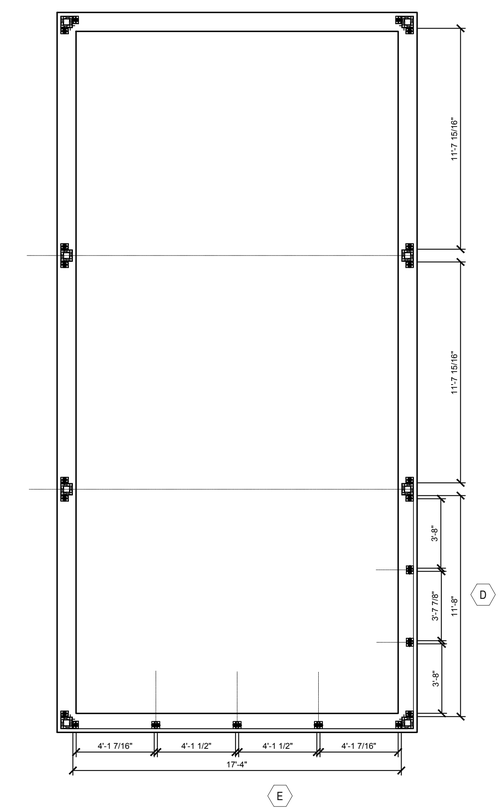

1 UPPER PLAN SERVICE PAVILLION
Scale: 1/4" = 1'-0"

GALVESTON COUNTY
BEACH PAVILION
CRYSTAL BEACH, TX 77650

BE–Arc LLC Project No : C–17–003.01

BRAX EASTERWOOD DESIGN
architecture + planning

BRAX EASTERWOOD
DESIGN
2728 AVENUE Q SUITE 2
GALVESTON TEXAS 77550
PHONE 409–354–8976
EASTERWOOD@BEAIA.COM

ARCHITECT # 19694

SEAL

DATE	REVISION

CONTRACT DOCUMENTS

DATE ISSUED:
12/12/2017

COPYRIGHT 2017

A6.2

WINDOW SCHEDULE - ENLARGED PLAN, ELEVATIONS, AND DETAILS

NTS

WINDOWS

COUNTY APPROVAL:
SIGNATURE _____ DATE_____

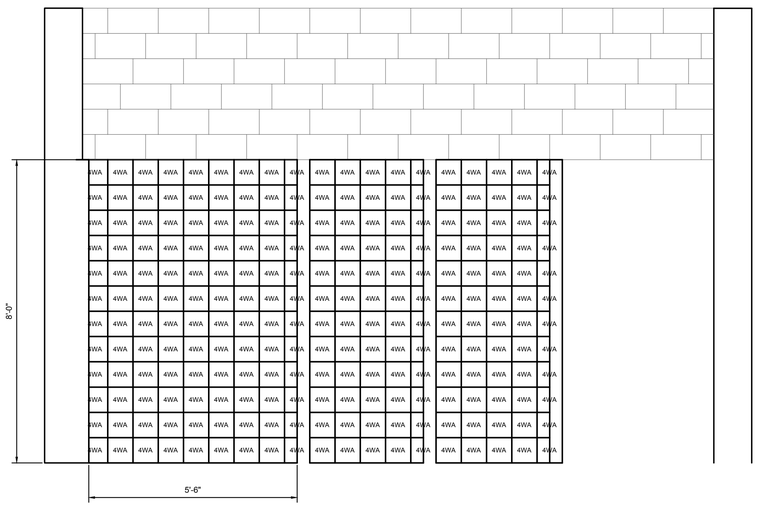

INTERIOR ELEVATIONS 1/2" = 1'-0" **4**

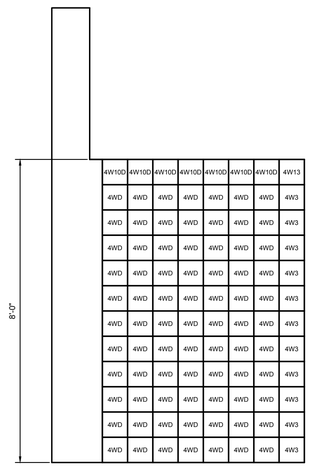

INT ELEVATIONS 1/2" = 1'-0" **5**

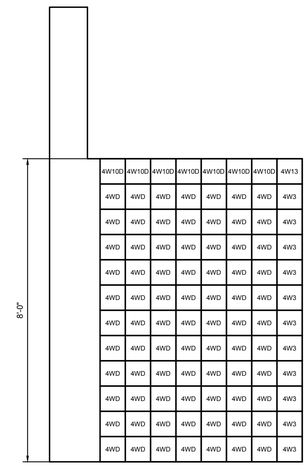

INT ELEVATIONS 1/2" = 1'-0" **6**

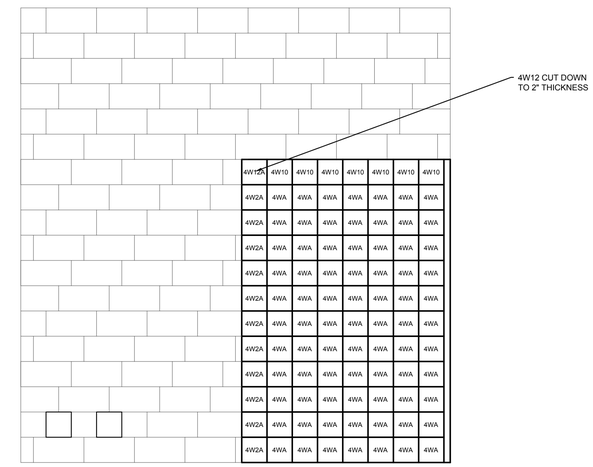

INT ELEVATIONS 1/2" = 1'-0" **7**

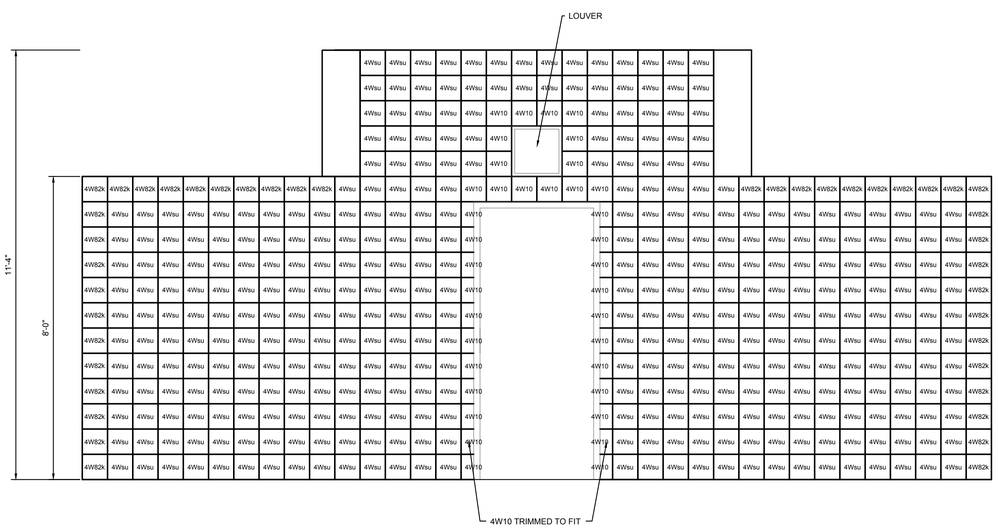

INT ELEV LOOKING NORTH 1/2" = 1'-0" **1**

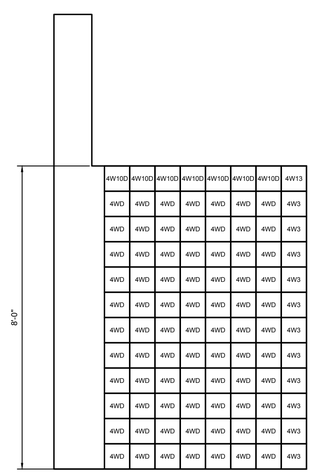

INT ELEV LOOKING SOUTH 1/2" = 1'-0" **2**

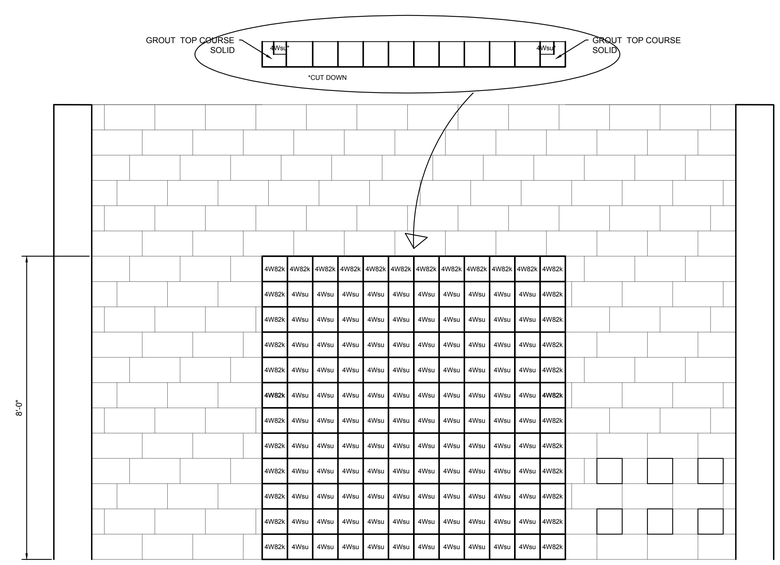

INTERIOR ELEVATIONS 1/2" = 1'-0" **3**

GALVESTON COUNTY BEACH PAVILION CRYSTAL BEACH, TX 77650

BE–Arc LLC Project No : C–17–003.01

BRAX EASTERWOOD DESIGN
architecture + planning

BRAX EASTERWOOD
DESIGN
2728 AVENUE Q SUITE 2
GALVESTON TEXAS 77550
PHONE 409–354–8976
EASTERWOOD@BEAIA.COM

ARCHITECT # 19694

SEAL

DATE	REVISION

CONTRACT DOCUMENTS

DATE ISSUED:
12/12/2017

COPYRIGHT 2017

A7.1

INTERIOR ELEVATIONS

COUNTY APPROVAL:
SIGNATURE _____ DATE_____

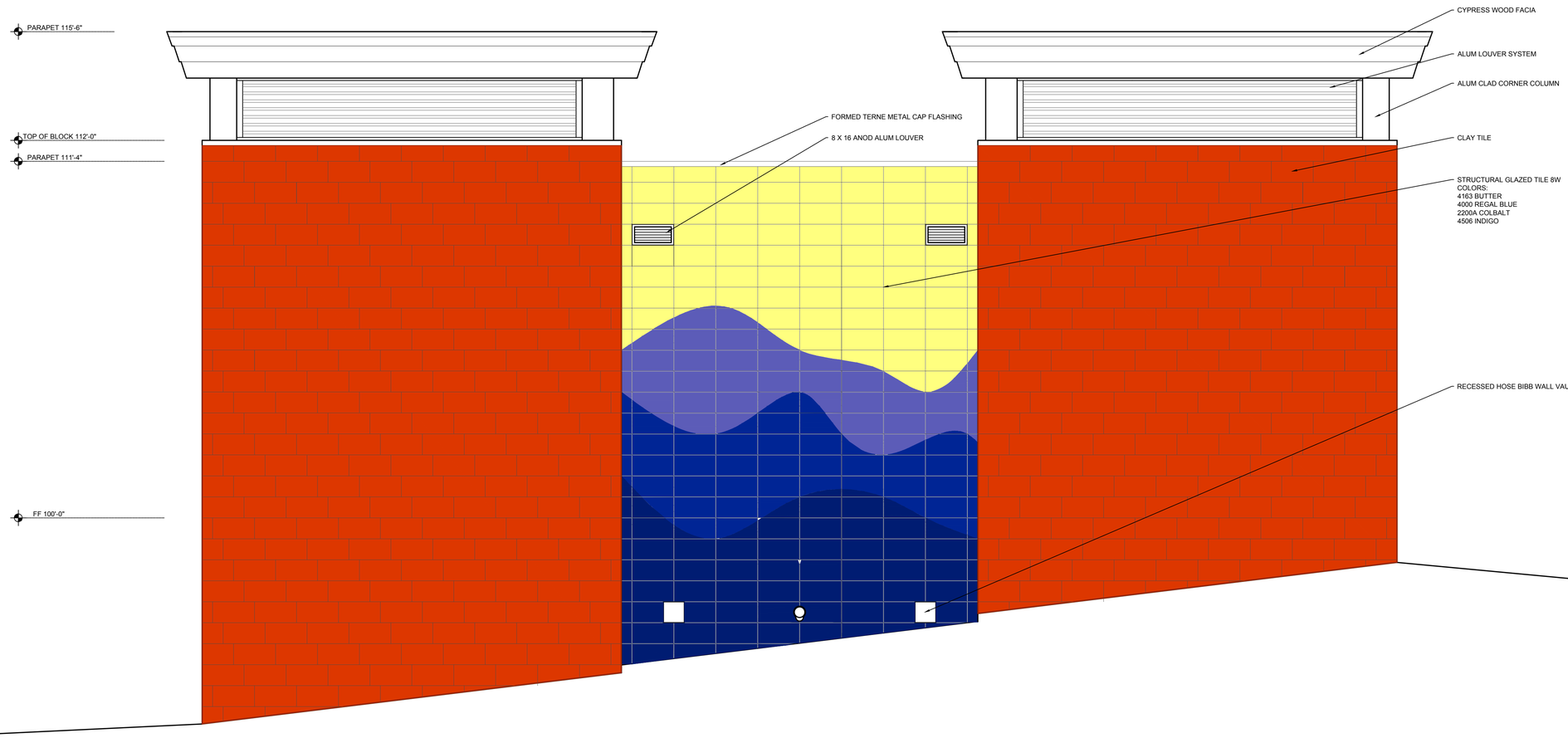

ENLARGED NORTH ELEVATION

1/2" = 1'-0" | 1

GALVESTON COUNTY
BEACH PAVILION
CRYSTAL BEACH, TX 77650

BE–Arc LLC Project No : C–17–003.01

BRAX EASTERWOOD DESIGN
architecture + planning

BRAX EASTERWOOD
DESIGN
2728 AVENUE Q SUITE 2
GALVESTON TEXAS 77550
PHONE 409–354–8976
EASTERWOOD@BEAIA.COM

ARCHITECT # 19694

SEAL

DATE	REVISION

CONTRACT DOCUMENTS

DATE ISSUED:
12/12/2017

COPYRIGHT 2017

A7.2

ENLARGED ELEVATION

COUNTY APPROVAL:
SIGNATURE _____ DATE_____

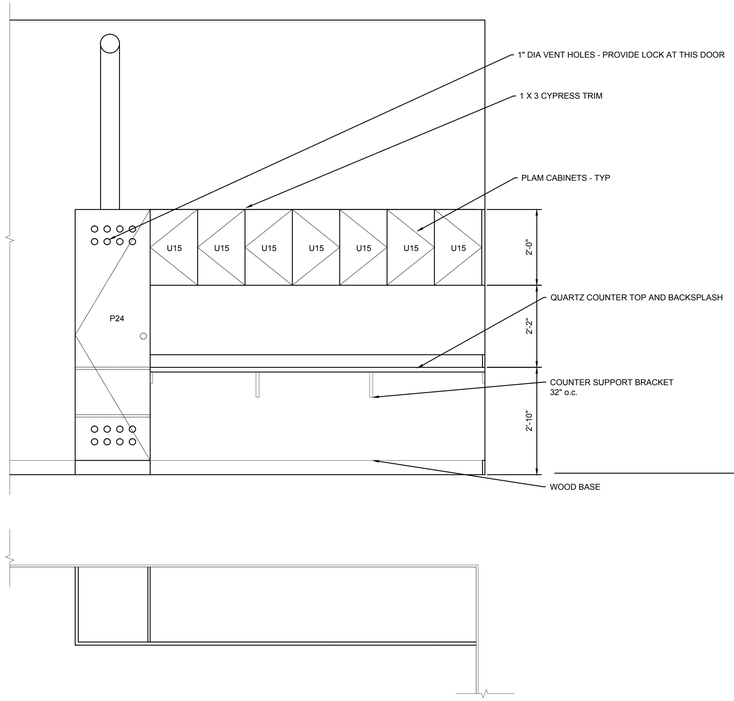

CASEWORK - SERVICE 104 1/2" = 1'-0" | 5

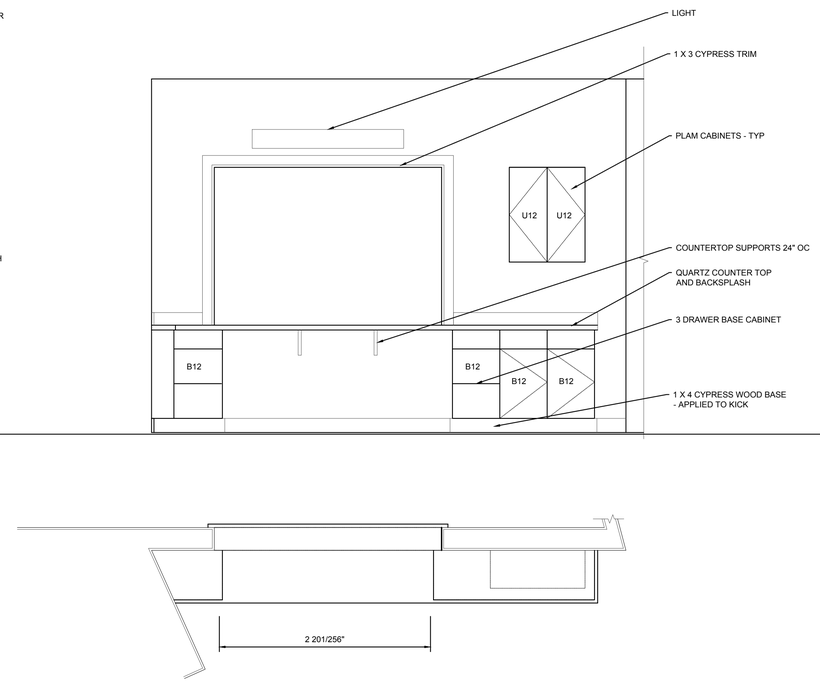

SERVICE COUNTER - SERVICE 104 1/2" = 1'-0" | 4

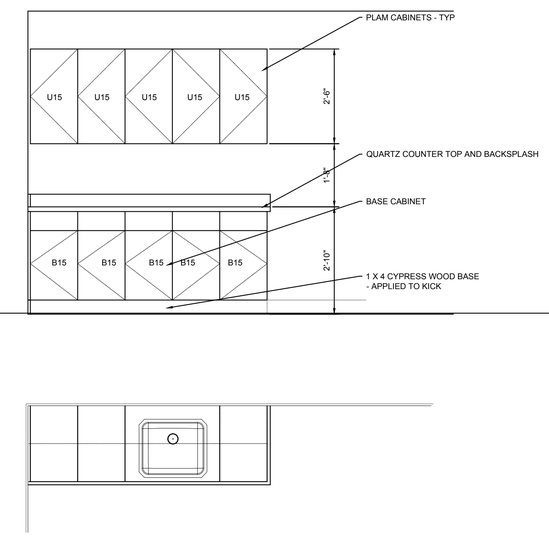

CASEWORK - FIRST AID 101 1/2" = 1'-0" | 3

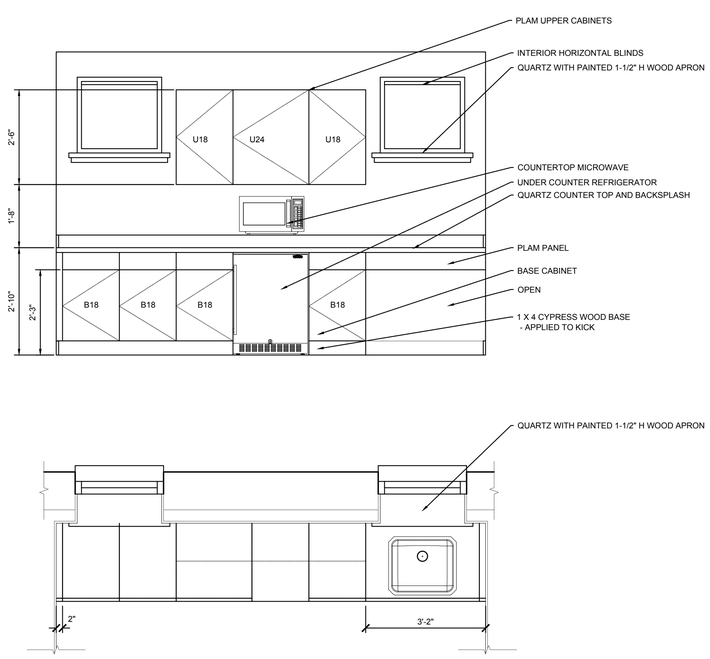

CASEWORK - KITCHENETTE 103 1/2" = 1'-0" | 2

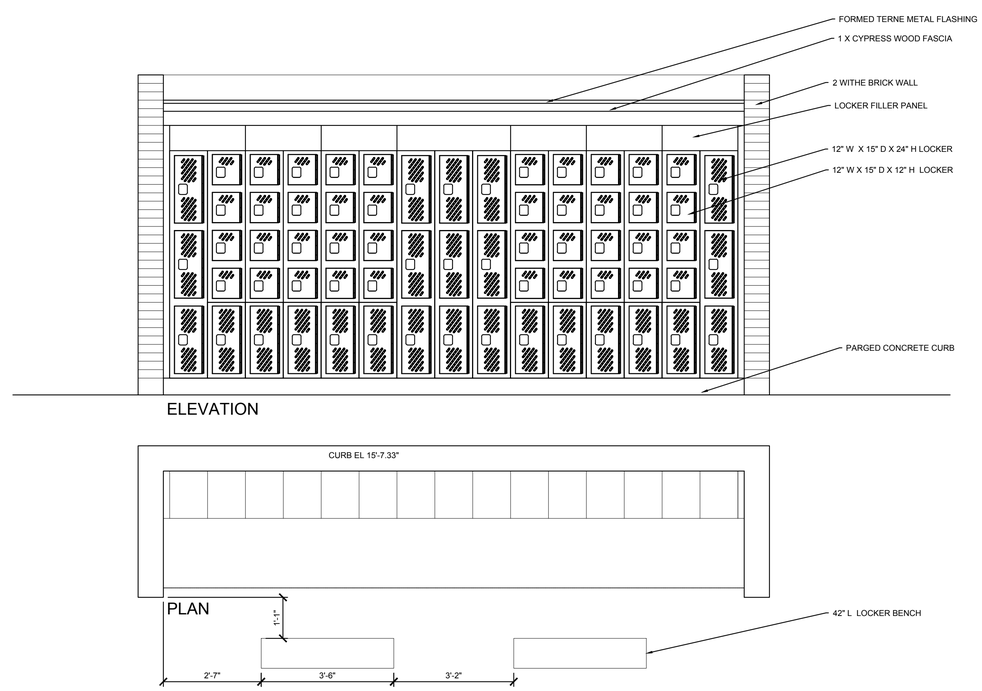

ENLARGED LOCKER PLAN AND ELEVATION 1/2" = 1'-0" | 1

GALVESTON COUNTY
BEACH PAVILION
CRYSTAL BEACH, TX 77650

BE–Arc LLC Project No : C–17–003.01

BRAX EASTERWOOD DESIGN
architecture + planning

BRAX EASTERWOOD
DESIGN
2728 AVENUE Q SUITE 2
GALVESTON TEXAS 77550
PHONE 409–354–8976
EASTERWOOD@BEAIA.COM

ARCHITECT # 19694

SEAL

DATE	REVISION

CONTRACT DOCUMENTS

DATE ISSUED:
12/12/2017

COPYRIGHT 2017

A7.3

CASEWORK

COUNTY APPROVAL:
SIGNATURE _____ DATE_____

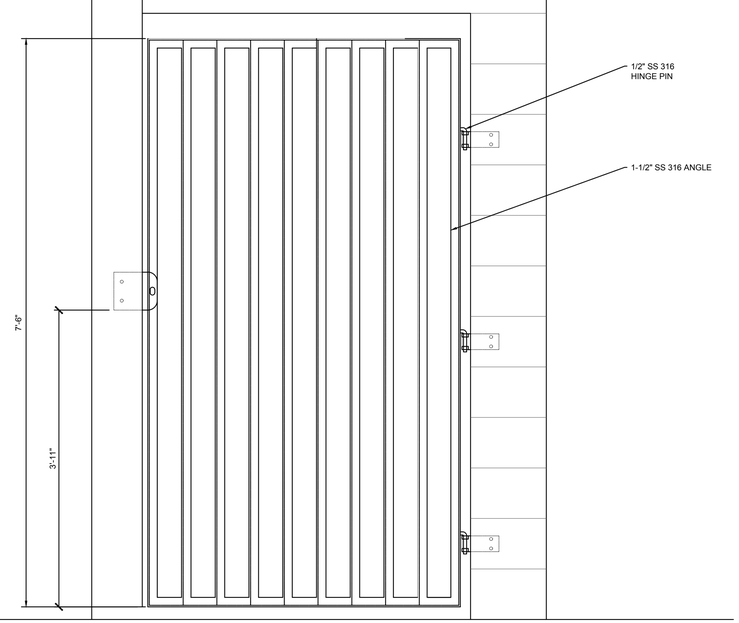

GATE ELEVATION 1" = 1'-0" **C**

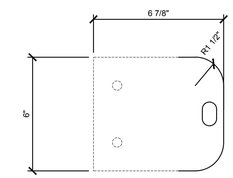

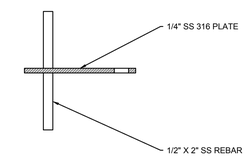

HASP PLATE ANCHOR 3" = 1'-0" **C**

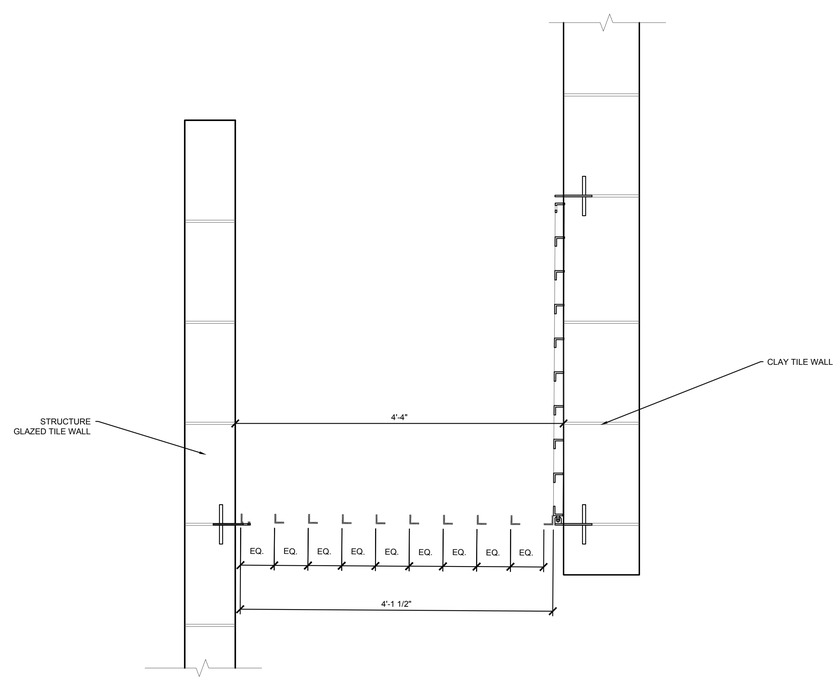

RESTROOM GATE PLAN 1" = 1'-0" **C**

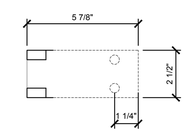

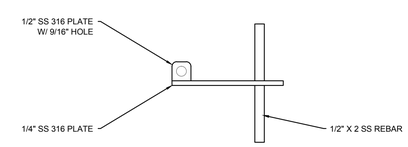

HINGE PLATE ANCHOR 3" = 1'-0" **D**

GALVESTON COUNTY
BEACH PAVILION
CRYSTAL BEACH, TX 77650

BE-Arc LLC Project No : C-17-003.01

BRAX EASTERWOOD DESIGN
architecture + planning

BRAX EASTERWOOD
DESIGN
2728 AVENUE Q SUITE 2
GALVESTON TEXAS 77550
PHONE 409-354-8976
EASTERWOOD@BEAIA.COM

ARCHITECT # 19694

SEAL

DATE	REVISION

CONTRACT DOCUMENTS

DATE ISSUED:
12/12/2017

COPYRIGHT 2017

A7.4

MISC METALS

LEGEND

GB36—36" GRAB BAR	SD—SOAP DISPENSER
GB48—48" GRAB BAR	TPH—TOILET PAPER HOLDER - JUMBO
MR1—MIRROR 18" X 36" SS	TPH—TOILET PAPER HOLDER
MR2—MIRROR 18" X 36	SND—SANITARY NAPKIN DISPOSAL
DRY—HAND DRYER	PTD—PAPER TOWEL DISPENSER

COUNTY APPROVAL:
SIGNATURE _____ DATE_____

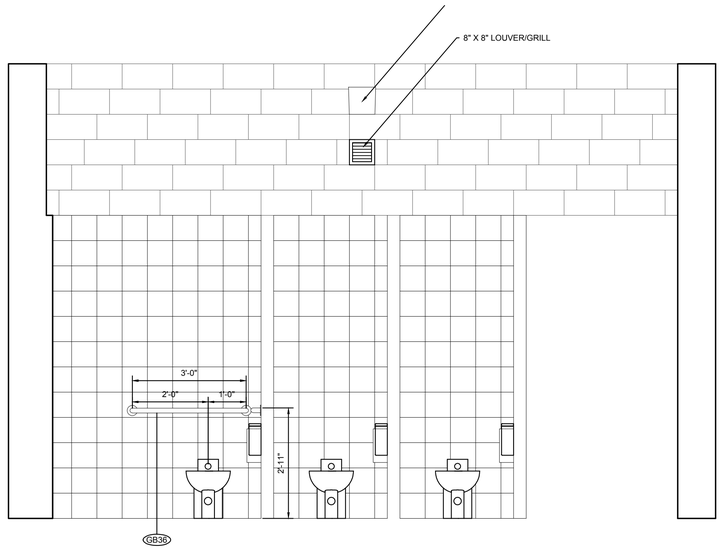

INTERIOR ELEVATIONS 1/2" = 1'-0" **4**

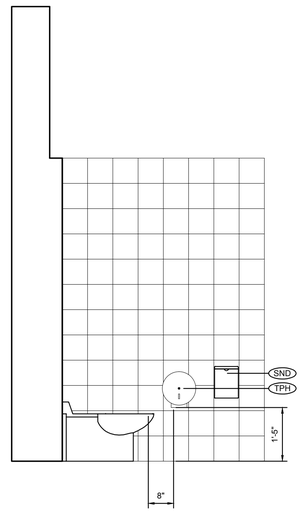

INT ELEV 1/2" = 1'-0" **5**

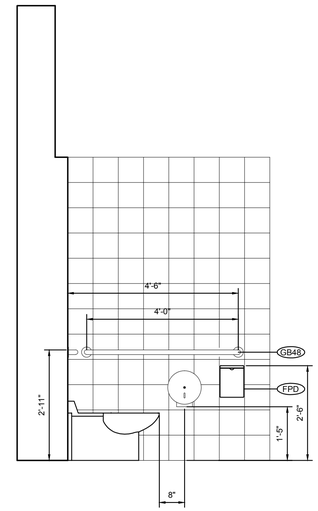

INT ELEV 1/2" = 1'-0" **6**

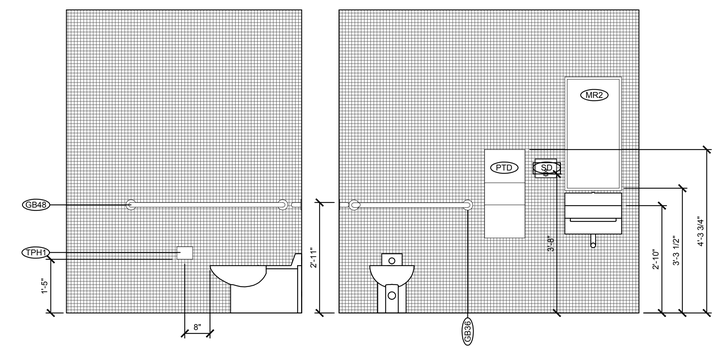

RESTROOM 105 ELEVATION 1/2" = 1'-0" **7**

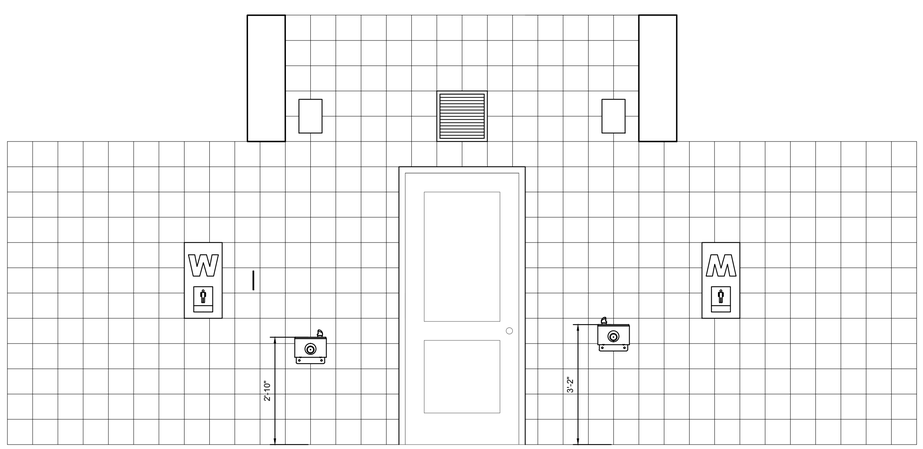

INT ELEV LOOKING NORTH 1/2" = 1'-0" **1**

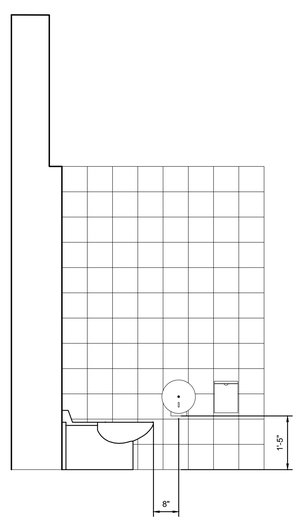

INT ELEV LOOKING SOUTH 1/2" = 1'-0" **2**

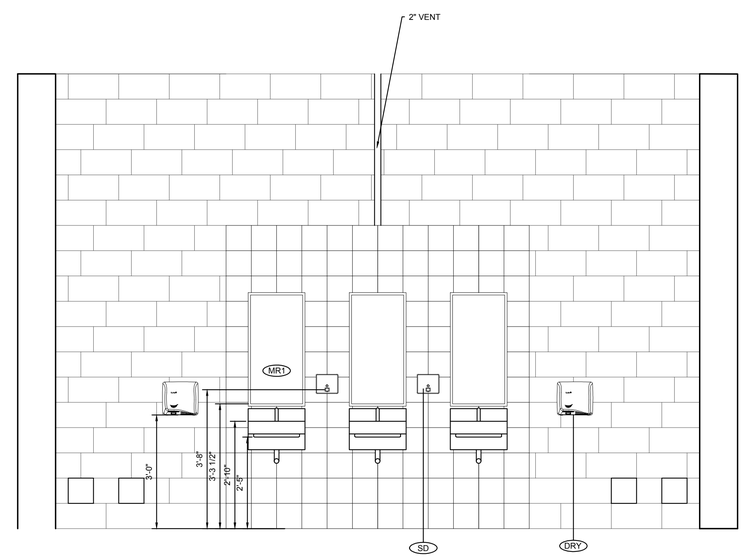

INTERIOR ELEVATIONS 1/2" = 1'-0" **3**

GALVESTON COUNTY
BEACH PAVILION
CRYSTAL BEACH, TX 77650

BE–Arc LLC Project No : C–17–003.01

BRAX EASTERWOOD DESIGN
architecture • planning

BRAX EASTERWOOD
DESIGN
2728 AVENUE Q SUITE 2
GALVESTON TEXAS 77550
PHONE 409–354–8976
EASTERWOOD@BEAIA.COM

ARCHITECT # 19694

SEAL

DATE	REVISION

CONTRACT DOCUMENTS

DATE ISSUED:
12/12/2017

COPYRIGHT 2017

A7.5

INTERIOR ELEVATIONS

COUNTY APPROVAL:
SIGNATURE _____ DATE_____

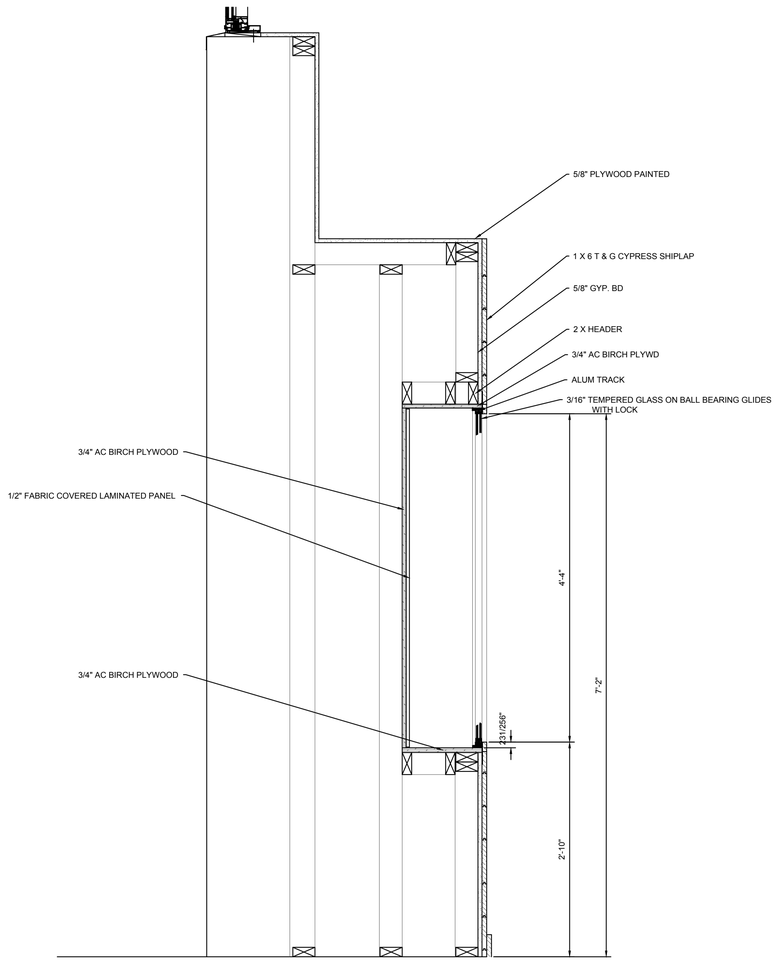

WALL SECTION THRU NORTH DISPLAY CABINET 1" = 1'-0" | 2

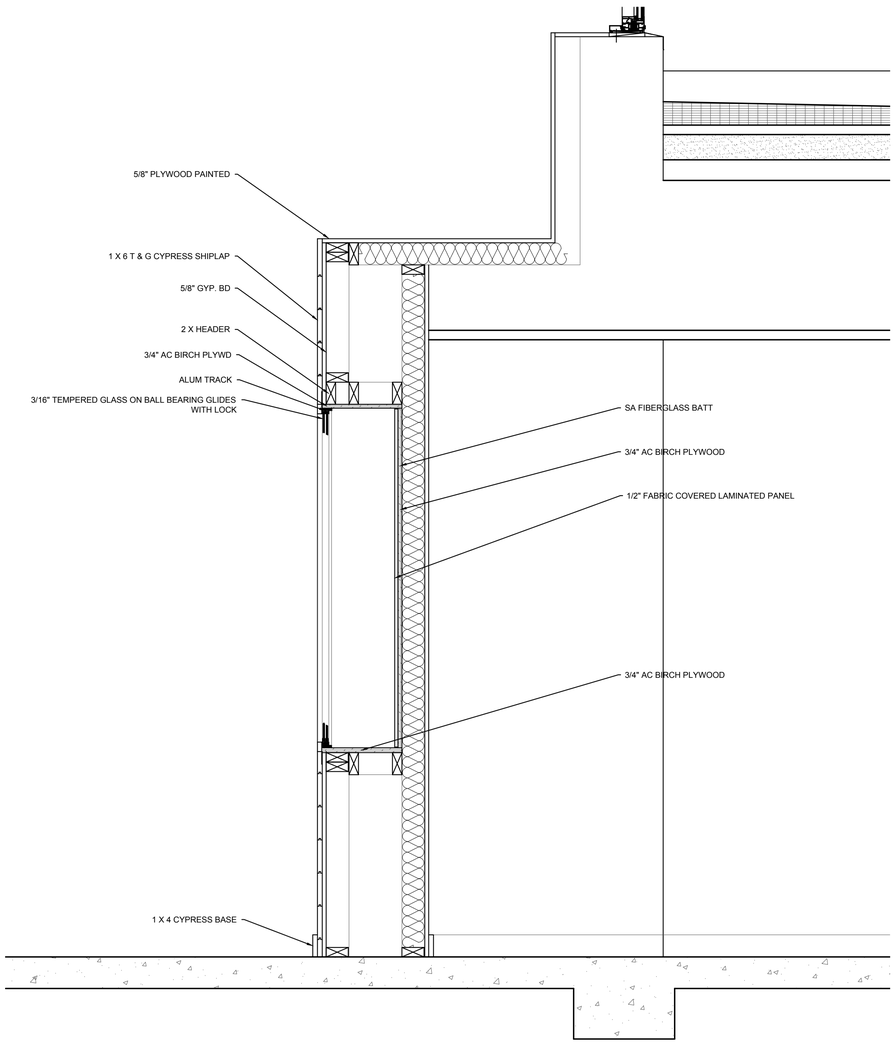

WALL SECTION THRU SOUTH DISPLAY CABINET 1" = 1'-0" | 3

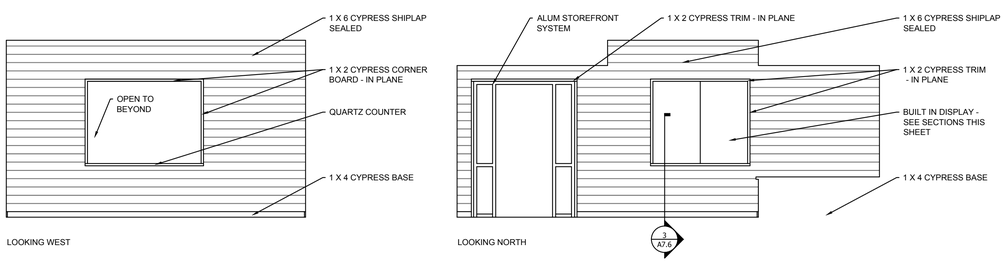

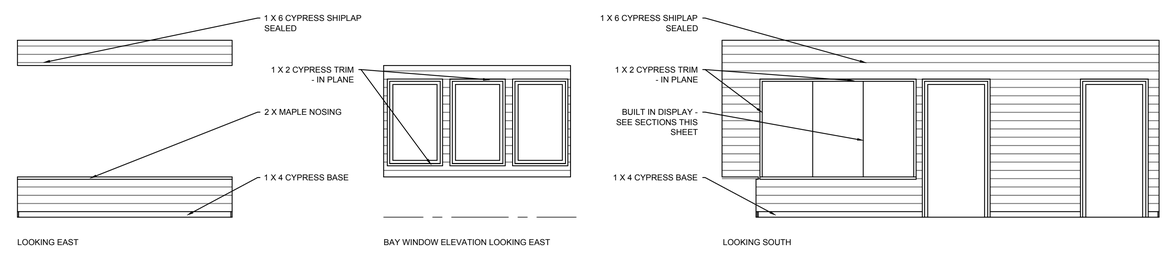

INT ELEVATION - WAITING 101 1/4" = 1'-0" | 1

GALVESTON COUNTY
BEACH PAVILION
CRYSTAL BEACH, TX 77650

BE–Arc LLC Project No : C–17–003.01

BRAX EASTERWOOD DESIGN
architecture + planning

BRAX EASTERWOOD
DESIGN
2728 AVENUE Q SUITE 2
GALVESTON TEXAS 77550
PHONE 409–354–8976
EASTERWOOD@BEAIA.COM

ARCHITECT # 19694

SEAL

DATE	REVISION

CONTRACT DOCUMENTS

DATE ISSUED:
12/12/2017

COPYRIGHT 2017

A7.6

INTERIOR ELEVATIONS

DESIGN DATA GOVERNING BUILDING CODE: IBC 2009

LIVE LOADS USED IN DESIGN:

1. OFFICES..... 100 PSF
2. MEETING/GATHERING..... 100 PSF
3. ROOF..... 20 PSF
4. CORRIDORS..... 100 PSF
5. MECHANICAL/STORAGE..... 100 PSF
6. ATTIC W/OUT STORAGE..... 10 PSF
7. EXTERIOR WALKWAYS..... 100 PSF
8. GUARDRAIL AND HANDRAIL
   - TOP RAIL..... 200 LBS
   - TOP RAIL..... 50 PLF
   - COMPONENTS..... 50 PSF
9. STAIRS..... 100 PSF
10. WIND-IBC
    - A. BASIC WIND SPEED (V 3s)..... 130 MPH
    - B. BUILDING CATEGORY..... TWO
    - C. IMPORTANCE FACTOR, IW..... 1.0
    - D. EXPOSURE CATEGORY..... C
    - E. ENCLOSURE CLASSIFICATION..... ENCLOSED
11. FLOOD LOADS-IBC
    - A. BASEFLOOD ELEVATION (NGVD 1929)..... 15.0'
    - B. DESIGN FLOOD ELEVATION (NGVD 1929).. 15.2'
    - C. FLOOD ZONE..... A15

PROJECT NOTES

A. GENERAL:

1. NOTES ON THIS PAGE SUPPLEMENT THE SPECIFICATIONS, REFER TO SPECIFICATIONS FOR ADDITIONAL REQUIREMENTS.
2. ENGINEERS APPROVAL MUST BE SECURED FOR ALL SUBSTITUTIONS.
3. CHECK ALL DIMENSIONS ON STRUCTURAL DRAWINGS AGAINST ARCHITECTURAL DRAWINGS.
4. VERIFY OPENINGS THROUGH FLOORS, ROOFS, AND WALLS WITH ARCHITECTURAL, MECHANICAL, CIVIL AND ELECTRICAL REQUIREMENTS.
5. ANY DISCREPANCY OF INFORMATION DESCRIBED ON THE STRUCTURAL DRAWINGS, SPECIFICATIONS, OR ANY INFORMATION SHOWN ON OTHER DRAWINGS MUST BE BROUGHT TO THE ATTENTION OF THE STRUCTURAL ENGINEER FOR CLARIFICATION AT OR PRIOR TO PRE-BID MEETING.
6. PRE-ENGINEERED SYSTEMS AND COMPONENTS SHALL BE INSTALLED ACCORDING TO THE MANUFACTURER'S RECOMMENDATIONS AND SPECIFICATIONS. SHOP DRAWINGS SHALL BE SUBMITTED TO THE STRUCTURAL ENGINEER FOR REVIEW PRIOR TO FABRICATION.
7. THE OWNER SHALL INDEMNIFY SHELMARK ENGINEERING, LLC. AGAINST ANY LIABILITY ASSOCIATED WITH THE UNAUTHORIZED REUSE OR MODIFICATION OF THE CONSTRUCTION DOCUMENTS, CALCULATIONS, OR OTHER INSTRUMENTS USED IN THE PRODUCTION OF THESE DRAWINGS AND WILL NOT BE ALLOWED FOR ANY USE WHATSOEVER, EXCEPT AS REQUIRED BY BUILDING OFFICIALS IN THEIR PROCESS OF ISSUING A BUILDING PERMIT.

B. SUBMITTALS:

1. FURNISH THREE SETS OF SHOP AND ERECTION DRAWINGS TO STRUCTURAL ENGINEER FOR REVIEW PRIOR TO FABRICATION. UNLESS THE STRUCTURAL ENGINEER PROVIDES WRITTEN EXCEPTION, THE TRANSFER OF REVIEWED SHOP DRAWINGS TO THE ARCHITECT WITHIN 10 WORKING DAYS OF RECEIPT BY THE STRUCTURAL ENGINEER'S OFFICE, SHALL BE CONSIDERED AS "REVIEWED IN A TIMELY MANNER". ONE SET OF REVIEWED SHOP DRAWINGS WILL BE RETAINED BY THE STRUCTURAL ENGINEER.
2. FURNISH TWO SETS OF CONCRETE MIX DESIGNS INCLUDING STRENGTH TEST DATA AND MANUFACTURER'S LITERATURE ON ADMIXTURES FOR REVIEW BY STRUCTURAL ENGINEER NO LATER THAN 2 WEEKS PRIOR TO ON-SITE USE OF THESE MATERIALS.
3. CONTRACT DOCUMENTS ARE NOT TO BE USED BY ANY CONTRACTOR, SUB-CONTRACTOR OR SUPPLIER AS PART OF THEIR SHOP DRAWING SUBMITTAL. ANY SHOP DRAWINGS SUBMITTED IN SUCH A MANNER WILL BE REJECTED AND RETURNED WITHOUT REVIEW.

CONSTRUCTION NOTES

A. STRUCTURAL STABILITY DURING CONSTRUCTION:

1. THE STRUCTURAL DRAWINGS REPRESENT THE COMPLETED STRUCTURE WITH ALL ELEMENTS PROPERLY INSTALLED IN THEIR FINAL POSITIONS.
2. THE CONTRACTOR SHALL BE RESPONSIBLE FOR ALL MEANS AND METHODS OF CONSTRUCTION, INCLUDING THE DESIGN, CONSTRUCTION, SEQUENCING AND MAINTENANCE OF ANY SHORING, BRACING, OR OTHER TEMPORARY SUPPORTS OR ERECTION DEVICES AS MAY BE REQUIRED TO PROPERLY BRACE, SUPPORT AND ERECT ANY ELEMENT DURING CONSTRUCTION.
3. DO NOT PLACE BACKFILL AGAINST FOUNDATION WALLS OR GRADE BEAMS UNTIL BRACING FLOORS ARE IN PLACE, OR OTHER TEMPORARY BRACING IS INSTALLED.
4. IT IS THE CONTRACTOR'S RESPONSIBILITY TO PAINT ALL SURFACES WHICH REQUIRE PROTECTION FROM THE ELEMENTS WITH THE APPROPRIATE PAINT INCLUDING NECESSARY PRIMER COATS AND BACK PRIMING WHERE NECESSARY.

B. SITE SAFETY

1. THE CONTRACTOR SHALL VERIFY ALL CONDITIONS TO HIS SATISFACTION BEFORE PROCEEDING WITH CONSTRUCTION. CONFIRM LOCATION OF ALL UNDERGROUND UTILITIES, CONDUIT, CABLE, PIPE LINES, GAS LINES, TELEPHONE AND POWERLINES. REVIEW SOIL TESTING REPORTS AND ENVIRONMENTAL REPORTS. IF A CONFLICT WITHIN THE PLANS IS DISCOVERED, THE CONTRACTOR IS TO NOTIFY THE ENGINEER BEFORE SUBMITTING BIDS. THE CONTRACTOR ACCEPTS RESPONSIBILITY FOR ANY CONSTRUCTION PROBLEM OR DEFECT CAUSED BY PROCEEDING WITH CONSTRUCTION WITHOUT NOTIFYING THE ENGINEER OF CONFLICTS WITHIN THE PLANS.
2. THE CONTRACTOR SHALL BE RESPONSIBLE FOR ALL SITE SAFETY AND CONFORMANCE TO ALL SAFETY REGULATIONS PRESCRIBED BY FEDERAL, STATE AND LOCAL AUTHORITIES, INCLUDING ADHERENCE TO ALL OSHA REQUIREMENTS IN EFFECT AT THE TIME OF CONSTRUCTION.
3. THE DESIGN, CONSTRUCTION AND MAINTENANCE OF ALL ERECTION OR TEMPORARY SAFETY DEVICES SHALL BE THE RESPONSIBILITY OF THE CONTRACTOR.
4. THE CONTRACTOR, SHALL IDENTIFY, AND BRING TO THE ATTENTION OF THE STRUCTURAL ENGINEER, ANY DETAIL OR CONDITION SHOWN ON THE DRAWING WHICH IS NOT IN COMPLIANCE WITH ANY FEDERAL, STATE, OR LOCAL REGULATIONS, SO THAT THE STRUCTURAL ENGINEER MAY PROVIDE CONFORMING MODIFICATIONS.

SITE SAFETY DURING TROPICAL EVENTS:

A. HURRICANE CONDITIONS OF READINESS: THE TEXAS COAST IS SUBJECT TO HURRICANE STORMS AT VARIOUS TIMES DURING THE YEAR. THE CONTRACTOR SHALL COMPLY WITH THE FOLLOWING REQUIREMENTS FOR HURRICANE READINESS UNLESS SPECIFICALLY DIRECTED OTHERWISE:

1. CONDITION FOUR: (SUSTAINED WIND OF 50 KNOTS OR GREATER EXPECTED WITHIN 72 HOURS) NORMAL DAILY JOB SITE CLEANUP AND GOOD HOUSEKEEPING PRACTICES. COLLECT AND STORE IN PILES OR CONTAINERS ALL SCRAP LUMBER, WASTE MATERIAL, AND RUBBISH FOR REMOVAL AND DISPOSAL AT THE CLOSE OF EACH WORKDAY. MAINTAIN THE CONSTRUCTION SITE AT THE CLOSE OF EACH WORKDAY. MAINTAIN THE CONSTRUCTION SITE INCLUDING STORAGE AREA, FREE OF ACCUMULATION OF DEBRIS. STACK FORM LUMBER IN NEAT PILES LESS THAN 4 FEET HIGH. REMOVE ALL DEBRIS, TRASH, OR OBJECTS THAT COULD BECOME MISSILE HAZARDS. CONTACT SHELMARK ENGINEERING FOR CONDITION OF READINESS UPDATES AND COMPLETION OF REQUIRED ACTION.

2. CONDITION THREE: (SUSTAINED WINDS OF 50 KNOTS OR GREATER EXPECTED WITHIN 48 HOURS)

   A. MAINTAIN "CONDITION FOUR" REQUIREMENTS AND COMMENCE SECURING OPERATIONS AS NECESSARY FOR "CONDITION ONE" WHICH CANNOT BE COMPLETED WITHIN 18 HOURS.

   B. CEASE ALL ROUTINE ACTIVITIES THAT MIGHT INTERFERE WITH SECURING OPERATIONS. COMMENCE SECURING AND STOW ALL GEAR AND PORTABLE EQUIPMENT. MAKE PREPARATIONS FOR SECURING BUILDINGS.

   C. REVIEW REQUIREMENT PERTAINING TO "CONDITION TWO" AND CONTINUE ACTION AS NECESSARY TO ATTAIN "CONDITION THREE" READINESS. CONTACT THE SHELMARK ENGINEERING FOR WEATHER AND CONDITION OF READINESS UPDATES AND COMPLETION OF REQUIRED ACTIONS. REMOVE ALL FLOATING PLANT EQUIPMENT FROM SITE.

3. CONDITION TWO: (SUSTAINED WINDS OF 50 KNOTS OR GREATER EXPECTED WITHIN 24 HOURS) CURTAIL OR CEASE ROUTINE ACTIVITIES UNTIL SECURING OPERATIONS IS COMPLETE. REINFORCE OR REMOVE FORMWORK AND SCAFFOLDING. SECURE MACHINERY, TOOLS, EQUIPMENT, MATERIALS, OR REMOVE FROM THE JOB SITE. EXPEND EVERY EFFORT TO CLEAR ALL MISSILE HAZARDS AND LOOSE EQUIPMENT FROM PROJECT SITE. SECURE THE JOB SITE AND LEAVE PREMISES.

4. CONDITION ONE: (SUSTAINED WINDS OF 50 KNOTS OR GREATER EXPECTED WITHIN 12 HOURS) SAME AS REQUIREMENTS PERTAINING TO "CONDITION TWO".

B. DUE TO THE POTENTIAL DAMAGES THAT WOULD RESULT FROM A HURRICANE OR STORM, EQUIPMENT SHALL BE REMOVED FROM THE SITE WITHIN 24 HOURS OF THE SETTING OF STORM CONDITION THREE.

C. THE CONTRACTOR'S SUPERINTENDENT AND QUALITY CONTROL CHIEF (CQC CHIEF) SHALL ATTEND A BRIEFING ON THE ESTABLISHMENT OF STORM CONDITIONS. COMPLIANCE WITH PROCEDURES ESTABLISHED AS A PART OF THE STORM CONDITION SETTINGS IS MANDATORY.

NON-STRUCTURAL BUILDING ELEMENTS:

A. NON-STRUCTURAL BUILDING ELEMENTS SUCH AS WINDOWS, DOORS, STOREFRONT, CURTAIN WALLS AND OTHER COMPONENTS AND CLADDING ARE TO BE DESIGNED BY THE SUPPLIER TO RESIST LATERAL LOADS AS SHOWN IN THE DESIGN DATA SECTION OF THESE NOTES. ALL CONNECTIONS AND ATTACHMENTS OF SUCH ELEMENTS TOT HE BUILDING STRUCTURE ARE THE RESPONSIBILITY OF THE SUPPLIER AND SHALL BE DESIGNED IN SUCH A MANNER THAT THE LOADS ARE TRANSFERRED TO THE STRUCTURAL FRAMING SYSTEM.

WINDSTORM CRITERIA:

A. ALL EXTERIOR WINDOWS, DOORS, GARAGE DOORS, AND SKYLIGHTS SHALL HAVE A CURRENT PRODUCT EVALUATION REPORT ON FILE WITH THE TEXAS DEPARTMENT OF INSURANCE.

B. SPECIAL WINDSTORM INSPECTIONS AS REQUIRED BY THE TEXAS DEPARTMENT OF INSURANCE SHALL BE PERFORMED BY A QUALIFIED WINDSTORM INSPECTOR. WRITTEN REPORTS SHALL BE PROVIDED TO THE STRUCTURAL ENGINEER.

C. THE STRUCTURAL ENGINEER OR THEIR ASSIGNED REPRESENTATIVE SHALL MAKE VISUAL OBSERVATIONS OF THE FOLLOWING ITEMS FOR GENERAL CONFORMANCE TO THE STRUCTURAL DESIGN. THE CONTRACTOR SHALL PROVIDE ADEQUATE NOTICE WHEN SUCH ITEMS HAVE BEEN INSTALLED TO THE EXTENT WHICH WILL ALLOW THE OBSERVATION.

1. SUBGRADE PREPARATION INCLUDING PROOF ROLLING
2. FIRST POUR OF CONCRETE FOOTINGS/BEAMS.
3. FIRST POUR OF CONCRETE WALL SYSTEM.
4. WINDOW / DOOR INSTALLATION. (CONTRACTOR SHALL PROVIDE TO SME DOCUMENTATION OF WINDOW MANUFACTURE, SERIES, MODEL AND SIZES FOR ALL LOCATIONS.)
5. EXTERIOR WALL CLADDING – INSPECTING PANEL SIZE, NAIL SIZE, NAIL SPACING AND INSTALLATION AS PER PLANS.
6. ROOF SYSTEM. INSPECTING SCREW SIZE AND PATTERN. (CONTRACTOR SHALL PROVIDE SME W/ DOCUMENTATION OF ROOFING MATERIAL BEFORE INSTALLATION).
7. FINAL FRAMING – INSPECTIONS INCLUDING SIDING AND EXTERIOR FINISHING.
8. MECHANICAL – INSPECTIONS PERTAINING TO PROPER ANCHORAGE OF MECHANICAL EQUIPMENT. (I.E. A/C UNIT).
9. PROTECTION OF EXTERIOR OPENINGS – STORM SHUTTER SYSTEM. (CONTRACTOR SHALL PROVIDE SME W/ DOCUMENTATION OF THE MANUFACTURER AND MODEL FOR THE STORM SHUTTER SYSTEM BEFORE INSTALLATION).

DEFERRED SUBMITTALS:

1. DEFERRED SUBMITTALS IN ACCORDANCE WITH IBC 107.3.4.2 AND SHALL FIRST BE SUBMITTED TO THE PROJECT ARCHITECT AND/OR ENGINEER OF RECORD FOR REVIEW AND COORDINATION. FOLLOWING THE COMPLETION OF THE REVIEW AND COORDINATION BY THE ARCHITECT/ENGINEER OF RECORD; A SUBMITTAL MAY THEN BE MADE TO THE CITY BUILDING DEPARTMENT FOR REVIEW AND APPROVAL, WHICH SHALL INCLUDE A LETTER STATING THIS REVIEW AND COORDINATION HAS BEEN PERFORMED AND COMPLETED, AND PLANS AND CALCULATIONS FOR THE DEFERRED ITEMS ARE FOUND TO BE ACCEPTABLE WITH NO EXCEPTIONS.
2. THE LIST SHOULD CONTAIN BUT NOT NECESSARILY BE LIMITED TO THE FOLLOWING ITEMS:

   A. N/A.

TESTING & QUALITY CONTROL

1. SOILS COMPACTION TESTS AND CONCRETE COMPRESSIVE STRENGTH TESTS SHOULD BE OBTAINED.
2. A PROFESSIONAL ENGINEER OR HIS REPRESENTATIVE MUST PERFORM CONSTRUCTION REVIEWS OF THE SUBGRADE PREPARATION AND SLAB PREPARATION.

CONCRETE

1. ALL CONCRETE SHALL BE NORMAL WEIGHT (NW) AGGREGATE UNLESS NOTED ON THE PLANS OR SCHEDULES.
2. CEMENT FOR ALL CONCRETE IN CONTACT WITH SOILS USE TYPE: I/II
3. CONCRETE SHALL CONFORM TO THE FOLLOWING TABLE:

USE	28 DAY STRENGTH	WEIGHT CLASS	SLUMP ±1"	MAX. AGG. SIZE	AIR
	PSI		INCHES	INCHES	%
FOOTINGS/PIER CAPS	4000	NW	4	1	0–2
WALLS AND COLUMNS	3000	NW	4	1	0–2
FLATWORK	3000	NW	4	1	0–2
ALL OTHER	3000	NW	5	1	0–2

CONCRETE REINFORCEMENT:

1. DETAIL BARS IN ACCORDANCE WITH "ACI DETAILING MANUAL", PUBLICATION SP-66, AND "BUILDING CODE REQUIREMENTS FOR STRUCTURAL CONCRETE, "ACI 318, LATEST EDITIONS, PROVIDE DETAILS INDICATING REINFORCING CONTINUITY AT CONSTRUCTION JOINTS.
2. REINFORCEMENT PROTECTION
   - CONCRETE PLACED AGAINST EARTH.....3"
   - CONCRETE PLACED IN FORMS BUT EXPOSED TO WEATHER OR EARTH:
   - BARS #5 AND SMALLER.....1-1/2"
   - BARS #6 AND LARGER.....2"
   - COLUMNS, GIRDERS, BEAMS.....1-1/2"
   - SLABS OR WALLS NOT EXPOSED TO WEATHER OR EARTH.....1"
3. SPLICES IN REINFORCEMENT ARE NOT PERMITTED EXCEPT AS DETAILED OR AUTHORIZED BY STRUCTURAL ENGINEER.
4. LAP ALL CONTINUOUS REINFORCING BARS 36 DIAMETERS AT SPLICES, TEES, AND CORNERS.
5. SPLICE CONTINUOUS TOP BARS AT MIDSPAN, SPLICE CONTINUOUS BOTTOM BARS OVER THE SUPPORT.
6. PROVIDE ACCESSORIES NECESSARY TO PROPERLY SUPPORT REINFORCING AT POSITIONS SHOWN ON PLANS AND DETAILS.
7. ENSURE HORIZONTAL CONTINUITY IN WALLS, FOOTINGS AND GRADE BEAMS, BY PROVIDING CORNER BARS AT ALL CORNERS AND INTERSECTIONS, CORNER BARS SHALL MATCH SIZE AND SPACING OF HORIZONTAL REINFORCING AND EXTEND A MINIMUM OF 36 BAR DIAMETERS BEYOND THE CORNER.
8. PLACE 2-#5 (1 EACH FACE) WITH 2'-0" PROJECTION AROUND OPENINGS THROUGH FLOOR TOPPING SLABS, UNLESS NOTED.
9. WIRE FABRIC REINFORCEMENT SHALL LAP ONE FULL MESH AT SPLICES AND BE WIRED TOGETHER.
10. WELDING OF REINFORCING SHALL NOT BE PERMITTED UNLESS SPECIFICALLY CALLED FOR OR APPROVED BY THE STRUCTURAL ENGINEER.
11. DO NOT RE-BEND ANY BARS WITH A YIELD STRESS GREATER THAN 40 KSI. THE USE OF HEAT TO FACILITATE BENDING OF REINFORCING BARS WILL NOT BE PERMITTED.
12. RUSTED REINFORCEMENT WILL NOT BE REJECTED PROVIDED THE MINIMUM DIMENSIONS AND CROSS SECTIONAL AREA OF A HARD WIRE BRUSH SPECIMEN MEET THE PHYSICAL REQUIREMENTS FOR THE SIZE AND GRADE OF THE STEEL SPECIFIED.
13. CONCRETE REINFORCING SHALL CONFORM TO THE FOLLOWING TABLE:

USE	ASTM	YIELD, KSI	NOTES
MILD REINFORCING	A615	60	
COLUMN TIES	A615	60	#3 BARS 40 KSI
BEAM STIRRUPS	A615	60	#3 BARS 40 KSI
WELDABLE	A706	60	

COUNTY APPROVAL:
SIGNATURE _____ DATE_____

FOUNDATION NOTES:

1. THE SOILS ARE ASSUMED TO BE LEVEL ON THIS SITE AND WITHIN 25' OF THE SITE.
2. DO NOT PLANT TREES CLOSER THAN 20 FEET TO THE SLAB. REMOVE ALL EXISTING TREE TRUNK/ROOTS AND REPLACE WITH COMPACTED FILL.
3. TO BRING TO FINISH GRADE SELECT STRUCTURAL FILL SHALL BE PROVIDED UNDERNEATH THE SLAB AREA. THE FILL SHALL CONSIST OF OFF-SITE INORGANIC SILTY CLAYS OR SANDY CLAYS WITH LIQUID LIMIT LESS THAN 40 AND A PLASTICITY INDEX (PI) BETWEEN 10 END 20 PLACED IN LIFTS NOT EXCEEDING 8-INCHES. THE TOP 1 TO 2-INCHES UNDER THE SLAB CAN BE BANK SAND FOR LEVELING PURPOSES.
4. THE ADDITIONAL FILL AND THE TOP 8-INCHES OF THE NATURAL SOIL, AFTER SCARIFYING THE TOP 6-INCHES, SHALL BE COMPACTED TO 95% STANDARD PROCTOR DENSITY PER ASTM D-698 AT A MOISTURE CONTENT WITHIN -1 TO +3% OF OPTIMUM.
5. SITE SHALL BE GRADED AND MAINTAINED TO PERMIT POSITIVE DRAINAGE AWAY FROM THE FOUNDATION.
6. ALL MIXING, TRANSPORTATION, PLACING, AND CURING OF CONCRETE SHALL COMPLY WITH ACI 318-02.
7. ALL FOUNDATION CONCRETE SHALL BE NORMAL WEIGHT AND SHALL HAVE A COMPRESSIVE STRENGTH OF 4,000 PSI AT 28 DAYS WITH A 4-INCH TO 5-INCH SLUMP FOR THE SLAB.
8. REINFORCING BARS WITH A SIZE GREATER THAN #3 SHALL CONFORM TO ASTM A-615 GRADE 60. LAP CONTINUOUS BARS 36 BAR DIAMETERS AT SPLICES.
9. SUPPORT SLAB REINFORCEMENT WITH PLASTIC CHAIRS AT 24" O.C.E.W. MAXIMUM OR CONCRETE BRICKS @ 3'-0" O.C.E.W. MAXIMUM. ADDITIONAL CHAIR/SUPPORTS MAY BE REQUIRED AT DISCRETION ON ENGINEER
10. PROVIDE (4) #5 X 4'-0" REBAR (2 TOP AND 2 BOTTOM) IN EXTERIOR FACE OF GRADE BEAMS AT CORNERS. PROVIDE (4) #5 X 4'-0" REBAR (2 TOP AND 2 BOTTOM) WHERE INTERIOR BEAMS DEAD END INTO ANOTHER BEAM. WHEN THE GRADE BEAM DEPTH EXCEEDS 30-INCHES PROVIDE (2) #5 BARS AT THE CENTER AND EVERY 12-INCHES THEREAFTER.
11. DAMP PROOF SLAB WITH A MINIMUM OF 6 MIL. POLYETHYLENE SHEATHING. LAP JOINTS 6-INCHES AND SEAL WITH TAPE. TURN UP AT WALLS.
12. PROVIDE THE FOLLOWING COVER FOR REINFORCEMENT:

    CONCRETE CAST AGAINST AND PERMANENTLY EXPOSED TO THE EARTH:.....3"
    CONCRETE EXPOSED TO EARTH OR WEATHER:.....1-1/2"
    CONCRETE NOT EXPOSED TO WEATHER OR IN CONTACT WITH THE GROUND:...3/4"
13. PIPING AND ELECTRICAL SHALL BE UNDER THE SLAB AND SLEEVED THROUGH ALL GRADE BEAMS.
14. STIRRUPS SHALL BE NO. 3 BARS SPACED PER PLANS. ALTERNATE METHODS MUST BE PRE-APPROVED BY ENGINEER.
15. STIRRUP DEPTH TO BE BEAM DEPTH (BELOW DROPS) LESS 7" (UNLESS NOTED OTHERWISE).
16. MOISTURE LOSS IN THE SOILS SHALL BE MINIMIZED.
17. PROVIDE CRACK CONTROL JOINTS AT 25 FEET CENTERS EACH WAY AT ALL SLAB AREAS WHICH WILL BE VISIBLE. SAWCUT CONTROL JOINTS WITHIN 24 HOURS AFTER HARD TROWELING.
18. SOILS COMPACTION TESTS AND CONCRETE COMPRESSIVE STRENGTH TESTS SHOULD BE OBTAINED. A PROFESSIONAL ENGINEER OR HIS REPRESENTATIVE MUST PERFORM CONSTRUCTION REVIEWS OF THE FOOTING INSTALLATION AND SLAB PREPARATION.
19. FOOTINGS SHALL BEAR ON EXISTING SOILS WHICH MEET SELECT FILL CLASSIFICATIONS. IF QUESTIONABLE SOIL IS ENCOUNTERED, THE STRUCTURAL ENGINEER SHALL BE NOTIFIED IMMEDIATELY. RE: REPORT NO. 1708/1200 BY COASTAL TESTING LABORATORIES, INC. ALL RECOMMENDATIONS THEREIN THAT RELATE TO THE WORK SHOWN ON THESE DRAWINGS MUST BE FOLLOWED.

DESIGN WIND PRESSURES (PSF)

COMPONENT	EFFECTIVE AREA	DESIGN PRESSURE (PSF)
DOOR 3068	20 SF	+40 / -42
WINDOW TYPE A	10 SF	+40 / -55
WINDOW TYPE B	10 SF	+40 / -55
UPPER WINDOW	20 SF	+40 / -52
ALUMINUM STOREFRONT	20 SF	+40 / -52
LOUVERS (IMPACT)	20 SF	+40 / -52

NOTE: ALL GLAZED AND NON-GLAZED OPENINGS SHALL BE IMPACT RATED AS PER TEXAS DEPARTMENT OF INSURANCE RECOMMENDATIONS.

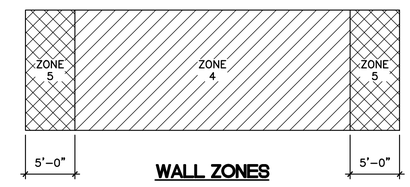

WALL ZONES

GALVESTON COUNTY
BEACH PAVILION
CRYSTAL BEACH, TX 77650

Shelmark Project No : 17-217

SHELMARK ENGINEERING, L.L.C.
CIVIL | MARINE | PLANNING | STRUCTURAL
801 FM 517 ROAD EAST | DICKINSON, TEXAS 77539
TX FIRM NO. F-2113

STATE OF TEXAS
MARCUS J. MICHNA
84739
LICENSED PROFESSIONAL ENGINEER
12-22-2017

DATE	REVISION

CONSTRUCTION DOCUMENTS

DATE ISSUED:
12/22/2017

S0.01

GENERAL NOTES

MASONRY NOTES:

1. ALL MASONRY MATERIALS AND CONSTRUCTION SHALL COMPLY WITH THE RECOMMENDATIONS OF THE BRICK INSTITUTE OF AMERICA (BIA) AND NATIONAL CONCRETE MASONRY ASSOCIATION (NCMA) AND MINIMUM REQUIREMENTS ESTABLISHED BY LOCAL BUILDING CODE.
2. ALL CONCRETE MASONRY UNITS (CMU) SHALL BE ASTM C-91 TYPE M UNLESS OTHERWISE SPECIFIED BY APPLICABLE BUILDING CODE.
3. CONTROL JOINTS SHALL BE SPACED PER PLANS AND SPECIFICATIONS OR AT A MAXIMUM SPACING OF 40'-0" CENTERS, UNLESS SPECIFICALLY APPROVED OTHERWISE BY ENGINEER.
4. MORTAR: EXCEPT AS OTHERWISE SET FORTH HEREIN ALL MORTARS AND THE MATERIALS THEREIN SHALL CONFORM TO THE STANDARD SPECIFICATIONS FOR MORTAR OF MASONRY UNITS, ASTM C270.

   A) MORTAR USED TO BOND UNIT MASONRY SHALL BE OF TYPE M, S, OR N, AND SHALL COMPLY WITH THE PROPERTY SPECIFICATIONS SET FORTH BELOW:

MORTAR STRENGTH PROPERTY SPECIFICATIONS

TYPE	MINIMUM AVERAGE STRENGTH (PSI)
M	2500
S	1800
N	750

   B) THE TYPE OF MORTAR BASED ON CONSIDERATION OF THE LOCATION OF THE UNIT MASONRY CONSTRUCTION SHALL BE AS FOLLOWS:

USE OF LOCATION	TYPE OF MORTAR
BELOW GRADE FOUNDATION AND WALLS	M
RETAINING WALLS	M
FIRE RESISTIVE WALLS RATED 2 HOURS OR MORE	M
EXTERIOR WALLS AND LOAD BEARING WALLS	M
PARTITIONS	M
SOLID MASONRY UNITS	ONE CLASSIFICATION LESS THAN THE ABOVE
MORTAR OR GROUT UNDER CONCENTRATED LOADS	M

5. ALL REINFORCED MASONRY WALLS WITH OPENINGS UP TO 4'-0" WIDE, SHALL HAVE ONE BAR (MINIMUM) AT EACH SIDE OF OPENINGS. FOR OPENINGS LARGER THAN 4'-0" WIDE PROVIDE 2 BARS AT EACH SIDE OF OPENINGS. FILL ALL REINFORCED CELLS WITH 2500 P.S.I. GROUT. REINFORCING AT EDGES OF OPENINGS TO MATCH TYPICAL MASONRY REINFORCING SIZE (UNLESS NOTED OTHERWISE) AND EXTEND TO TOP OF WALL.
6. SPECIAL INSPECTIONS ARE REQUIRED IN ACCORDANCE WITH IBC 2009 1704.5.2.
7. PROVIDE TRUSS TYPE HORIZONTAL REINFORCING AT 16" O.C. FOR ALL CMU WALLS UNLESS NOTED OTHERWISE.
8. GROUT SOLID ALL REINFORCED CELLS AND BOND BEAMS WITH 2500 PSI GROUT.
9. ALL REINFORCED MASONRY WALL CORNERS AND INTERSECTIONS SHALL HAVE ONE VERTICAL BAR (MINIMUM). FILL REINFORCED CELL (S) WITH 2500 P.S.I. GROUT. REINFORCING SHALL MATCH TYPICAL MASONRY REINFORCING SIZE (UNLESS NOTED OTHERWISE) AND EXTEND TO TOP OF WALL.
10. PROVIDE ONE VERTICAL BAR (MIN.) FIRST CELL EACH SIDE OF CONTROL JOINTS. FILL CELL WITH 2500 P.S.I. GROUT.

STRUCTURAL STEEL:

A. CONNECTIONS:

1. UNLESS SPECIFICALLY NOTED ON THE DRAWINGS, ALL STEEL DETAILS AND CONNECTIONS SHALL CONFORM TO THE STANDARDS OF A.I.S.C. AND SHALL DEVELOP ONE-HALF THE SHEAR CAPACITY OF THE MEMBER.
2. CONNECTIONS SHALL USE A MINIMUM OF 3/4" DIA A325 BOLTS (OR WELDED EQUIVALENT) UNLESS OTHERWISE NOTED. EACH CONNECTION SHALL HAVE A MINIMUM OF TWO BOLTS.
3. BOLTS MAY BE INSTALLED SNUG TIGHT AS DEFINED BY AISC, WITH THE FOLLOWING EXCEPTIONS WHICH MUST BE TENSIONED TO THE VALUES IN TABLE 4 OF "RCSC SPECIFICATIONS FOR STRUCTURAL JOINTS USING A325 OR A490 BOLTS".

   A. WHERE NOTED AS "SC" ON THE DRAWINGS.

B. WELDS:

1. MINIMUM WELDS: AISC SPECIFICATION, NOT LESS THAN 1/4" FILLET, CONTINUOUS UNLESS OTHERWISE NOTED.
2. ALL GROOVE WELDS TO BE FULL PENETRATION UNLESS NOTED.
3. WELDERS SHALL HAVE CURRENT EVIDENCE OF PASSING THE APPROPRIATE A.W.S. QUALIFICATION TESTS.

C. FIELD MODIFICATIONS:

1. NO BEAM, COLUMN, BRACE, CONNECTION, BASE PLATE OR ANCHOR BOLT MAY BE FIELD MODIFIED WITHOUT PRIOR APPROVAL OF THE STRUCTURAL ENGINEER.

D. DESIGNED, FABRICATED, AND ERECTED IN ACCORDANCE WITH AMERICAN INSTITUTE OF STEEL CONSTRUCTION, MANUAL OF STEEL CONSTRUCTION, ALLOWABLE STRESS DESIGN, LATEST EDITION.

E. SPLICING OF STRUCTURAL STEEL WHERE NOT DETAILED IS PROHIBITED WITHOUT PRIOR APPROVAL OF STRUCTURAL ENGINEER.

F. ALL STEEL MEMBERS AND CONNECTIONS SHALL RECEIVE ONE SHOP COAT OF IRON OXIDE CORROSION INHIBITIVE PRIMER PER METAL BUILDING MANUFACTURER RECOMMENDATIONS.

SHAPE	ASTM	MIN. YIELD STRENGTH, KSI	NOTES
WF BEAMS	A992	50	BEAMS AND COLUMNS
ROLLED SHAPES	A36	36	ANGLES AND CHANNELS
PIPE	A53	35	
TUBE	A500 GRADE B	46	
PLATES	A36	36	
MISC.	A36	36	
BOLTS	A325		
ANCHOR RODS	F1554	36	UNLESS NOTED OTHERWISE

WOOD FRAMING SPECIFICATIONS

1. WOOD FRAMING SIZES, VERTICAL FRAMING, HORIZONTAL FRAMING, FIRESTOPS, ANCHORAGE, FURRING AND CONNECTORS NOT SHOWN ON DOCUMENTS SHALL BE PER LOCAL BUILDING CODE MINIMUM REQUIREMENTS.
2. A) PLYWOOD ROOF SHEATHING SHALL BE 5/8" THICK STANDARD C.D. EXPOSURE 1, PANEL INDEX 19/32 CONFORMING TO U.S. PS-1 AND STAMPED WITH DFPA GRADE-TRADMARK.

   B) PLYWOOD PANELS SHALL BE NAILED TO SUPPORTS WITH 8d COMMON NAILS, OR EQUIVALENT FASTENERS.

   C) NAIL SPACING SHALL BE SIX INCHES ON CENTER AT PANEL EDGES AND 12 INCHES ON CENTER AT INTERMEDIATE SUPPORTS.
3. ALL STRUCTURAL LUMBER SHALL BE S.Y.P. OF THE FOLLOWING MINIMUM GRADES AND ALLOWABLE STRESSES OR EQUIVALENT AS PER NATIONAL FOREST PRODUCTS ASSOCIATION.

STUDS	STANDARD STUD
JOISTS	STRUCT. GRADE NO. 2
BEAM 2"-4" THICK	STRUCT. GRADE NO. 2
POSTS	STRUCT. GRADE NO. 2
PLATE STOCK	STRUCT. GRADE NO. 3

   - ALL FLOOR JOIST BRIDGING TO BE LOCAL CODES OR AS SHOWN.
   - GLU-LAM MEMBERS SHALL BE COMBINATION 24F WITH Fb = 2400 PSI.
   - PSL. MEMBERS SHALL MIN. Fb = 2900 PSI. & MIN. Fv = 290 PSI.
4. ALL LUMBER SHALL BE STAMPED WITH THE GRADE MARK OF AN APPROVED TESTING AGENCY.
5. ALL WOOD IN CONTACT WITH CONCRETE OR EXPOSED TO WEATHER SHALL BE TREATED LUMBER.
6. FRAMED OPENINGS: DOUBLE STUD FOR OPENING LESS THAN 4' WIDE TRIPLE STUD FOR OPENING 4' WIDE OR MORE.
7. THE NUMBER OF WALL STUDS AT BEARING POINTS OF 2X MEMBER BEAMS SHALL EXCEED THE NUMBER OF MEMBERS IN THE BEAM BY ONE. THE CENTERLINE OF THE BEAM SHALL BE THE CENTERLINE OF THE SUPPORTING WALL STUDS. (UNLESS NOTED OTHERWISE ON PLAN.)
8. ALL FLUSH BEAMS AND JOISTS TO BE SUPPORTED BY APPROVED HANGER.
9. ═══ = INDICATES BEARING WALLS.
10. ━ • ━ = INDICATES WOOD BEAM
11. ⊏ = HANGER
13. CEILING JOIST FRAMING TO BE AS SHOWN ON PLANS.
14. ROOF RAFTERS SHALL BE 2X8 AT 16" O.C. MAX. ALLOWABLE RAFTER SPAN 12'-10". UNLESS NOTED OTHERWISE.

TIMBER NOTES:

1. ALL TIMBER SHALL BE SOUTHERN YELLOW PINE #2 KILN DRIED.
2. ALL STRUCTURAL COMPOSITE LUMBER SHALL BE SOUTHERN PINE OR EQUAL W/ AN ALLOWABLE BENDING STRESS OF 2400 PSI.
3. ALL STRUCTURAL COMPOSITE LUMBER SHALL MEET THE AITC VOLUNTARY PRODUCT STANDARD PS 556-73.
4. ALL STRUCTURAL COMPOSITE LUMBER SHALL BE PRESERVATIVE TREATED IN ACCORDANCE WITH C15-98.
5. ALL FIRST FLOOR FRAMING SHALL BE PRESSURE TREATED TIMBER.
6. FASTENERS AND CONNECTORS FOR PRESERVATIVE-TREATED WOOD.

   6.1. FASTENERS, INCLUDING NUTS AND WASHERS, IN CONTACT WITH PRESERVATIVE-TREATED WOOD SHALL BE OF HOT-DIPPED ZINC-COATED GALVANIZED (HDG) STEEL, STAINLESS STEEL (TYPE 304 OR 316), SILICON BRONZE OR COPPER. FASTENERS OTHER THAN NAILS, TIMBER RIVETS, WOOD SCREWS AND LAG SCREWS SHALL BE PERMITTED TO BE OF MECHANICALLY DEPOSITED ZINC-COATED STEEL WITH COATING WEIGHTS IN ACCORDANCE WITH ASTM B-695, CLASS 55 MINIMUM.

   6.2. CONNECTORS THAT ARE USED IN EXTERIOR APPLICATIONS AND IN CONTACT WITH PRESERVATIVE-TREATED WOOD SHALL HAVE COATING TYPES AND WEIGHTS IN ACCORDANCE WITH THE TREATED WOOD OR CONNECTOR MANUFACTURER'S RECOMMENDATIONS. IN THE ABSENCE OF MANUFACTURER'S RECOMMENDATIONS, A MINIMUM OF ASTM A653, TYPE G185 ZINC-COATED GALVANIZED STEEL, OR EQUIVALENT, SHALL BE USED.

   6.3. FASTENINGS FOR WOOD FOUNDATIONS. FASTENINGS, INCLUDING NUTS AND WASHERS, FOR WOOD FOUNDATIONS SHALL BE OF TYPE 304 OR 316 STAINLESS STEEL. EXCEPTION: WHEN FRAMING LUMBER IS TREATED WITH CHROMATED COPPER ARSENATE (CCA) AND THE MOISTURE CONTENT OF THE FRAMING REMAINS AT 19 PERCENT OR LESS (SUCH AS STUDS, BLOCKING, AND TOP PLATES OF EXTERIOR AND INTERIOR BASEMENT WALLS), HOT-DIPPED GALVANIZED (ZINC-COATED) STEEL FASTENERS CONFORMING TO THE REQUIREMENTS OF ASTM A153 SHALL BE PERMITTED IN LUMBER-TO-LUMBER CONNECTIONS.

   6.4. ALL HDG FASTENERS, CONNECTORS, AND ANCHOR RODS SHALL BE TOUCHED UP AS REQUIRED WITH AN APPROVED COLD GALVANIZED COMPOUND CONFORMING TO ASTM A-780.

7. **DO NOT BORE HOLES THROUGH ANY STRUCTURAL BEAMS, GLU-LAMS, OR PRE-ENGINEERED TRUSS.**

STUD SCHEDULE

1 STORY	EXTERIOR	INTERIOR
1ST FLOOR	2 X 4 AT 16" O.C.	2 X 4 AT 16" O.C. (U.N.O.)

NOTES:

1. REFER TO "WOOD FRAMING NOTES" SECTION OF STRUCTURAL SPECIFICATION FOR MATERIAL AND LUMBER GRADE.
2. STUD HEIGHT CAN BE MEASURED FROM FOUNDATION TO EITHER ROOF OR INTERMEDIATE SUPPORT FROM EITHER STAIR LANDING OR OTHER MEMBER THAT IS MECHANICAL TIED TO FLOOR DIAGRAM.
3. WALL STUDS SHALL BE SOUTHERN YELLOW PINE NO. 2 DENSE.

EPOXY ANCHORS/ADHESIVE

1. INJECTABLE ADHESIVE SHALL BE DESIGNED TO ACCEPT STATIC MIXING NOZZLE WHICH THOROUGHLY

   BLENDS COMPONENT A AND COMPONENT B AND ALLOWS INJECTION DIRECTLY INTO DRILLED HOLE.

   ONLY INJECTION TOOLS AND STATIC MIXING NOZZLES AS RECOMMENDED BY MANUFACTURER SHALL

   BE USED. MANUFACTURE'S INSTRUCTIONS SHALL BE FOLLOWED. INJECTION ADHESIVE SHALL BE FORMULATED TO INCLUDE RESIN AND HARDENER TO PROVIDE OPTIONAL CURING SPEED AS WELL AS HIGH STRENGTH AND STIFFNESS. TYPICAL CURING TIME AT 68°F (20°C) SHALL BE APPROXIMATELY 30 MINUTES.
2. INJECTION ADHESIVE SHALL BE HIT-HY 200 MAX-SD, AS FURNISHED BY HILTI.
3. DRILL HOLES WITH ROTARY IMPACT HAMMER DRILLS USING CARBIDE TIPPED BITS, DRILL BITS SHALL BE OF DIAMETERS AS SPECIFIED BY THE ANCHOR MANUFACTURER. UNLESS OTHERWISE SHOWN ON THE DRAWINGS, ALL HOLES SHALL BE DRILLED PERPENDICULAR TO THE CONCRETE SURFACE.
4. PERFORM ANCHOR INSTALLATION IN ACCORDANCE WITH MANUFACTURER INSTRUCTIONS.
5. CLEAN ALL HOLES PER MANUFACTURER INSTRUCTIONS TO REMOVE LOOSE MATERIAL AND DRILLING DUST PRIOR TO INSTALLATION OF ADHESIVE. INJECT ADHESIVE INTO HOLES PROCEEDING FROM THE BOTTOM OF THE HOLE AND PROGRESSING TOWARD THE SURFACE IN SUCH A MANNER AS TO AVOID INTRODUCTION OF AIR POCKETS IN THE ADHESIVE. FOLLOW MANUFACTURER RECOMMENDATIONS TO ENSURE PROPER MIXING OF ADHESIVE COMPONENTS. SUFFICIENT ADHESIVE SHALL BE INJECTED IN THE HOLE TO ENSURE THAT THE ANNULAR GAP IS FILLED TO THE SURFACE. REMOVE EXCESS ADHESIVE FROM THE SURFACE. SHIM ANCHORS WITH SUITABLE DEVICE TO CENTER THE ANCHOR IN THE HOLE. DO NOT DISTURB OR LOAD ANCHORS BEFORE MANUFACTURER SPECIFIED CURE TIME HAS ELAPSED.
6. OBSERVE MANUFACTURER RECOMMENDATIONS WITH RESPECT TO INSTALLATION TEMPERATURES OF CARTRIDGE INJECTION ADHESIVE ANCHORS AND CAPSULE ANCHORS.
7. REMOVE AND REPLACE MISPLACED OR MALFUNCTIONING ANCHORS. FILL EMPTY ANCHOR HOLES AND PATCH FAILED ANCHOR LOCATIONS WITH HIGH-STRENGTH NON-SHRINK, NON METALLIC GROUT.
8. ANCHORS, BOLTS, NUTS, AND WASHERS: BOLTS AND STUDS, NUTS, AND WASHERS SHALL CONFORM TO ASTM A307, GRADE A, AND ASTM A449, ASTM A563, AND ASTM F436, F1554 GR. 55, AS APPLICABLE. HOT-DIP GALVANIZED BOLTS AND STUDS INCLUDING ASSOCIATED NUTS AND WASHERS IN ACCORDANCE WITH ASTM A153.

DECKING AND SHEATHING

1. DECKING FOR ROOF SHALL BE 5/8" THICK CDX PLYWOOD EXPOSURE 1 WITH AN APR RATING OF 40/20. DECKING APPLIED OVER 8.25" STRUCTURAL INSULATED PANELS (S.I.P.).
2. DECKING FOR FLOORS SHALL BE 1 1/8" THICK T&G APA RATED PLYWOOD STANDARD C-D INTERIOR WITH EXTERIOR GLUE OR ORIENTED STRAND BOARD (OSB) (STURDY FLOOR) WITH PANEL SPAN RATING OF 48/24. INSTALL DECKING WITH FACE GRAIN ACROSS SUPPORT.
3. GYPSUM WALLBOARD FOR SHEARWALLS SHALL BE 5/8" THICK AND FREE FROM IMPERFECTIONS AND CONFORM TO ASTM C79 SPECIFICATIONS AND AS SHOWN ON ARCHITECTURAL DRAWINGS.
4. EXTERIOR WALL SHEATHING SHALL BE 5/8" CDX PLYWOOD. (U.N.O.)

WIRE NAILS

1. NAILING INSTALLATION AND MATERIALS ARE TO BE IN COMPLIANCE WITH A.I.T.C., NDS, AND APPLICABLE BUILDING CODE REQUIREMENTS.
2. GUN NAILS MAY BE USED IN LIEU OF HAND NAILING GUN NAIL SIZES SHALL BE AS FOLLOWS:

PENNY WEIGHT	GUN NAIL DIAMETER
8d	0.113"
10d	0.123"
12d	0.123"
16d	0.133"

3. NAILS SHALL HAVE A MINIMUM PENETRATION OF 6 TIMES THE WIRE DIAMETER UNLESS OTHERWISE NOTED ON PLANS.
4. EDGE DISTANCE FOR ALL NAILS SHALL BE MINIMUM OF 2 TIMES THE WIRE DIAMETER UNLESS OTHERWISE NOTED ON PLANS.
5. ALL NAILS SHOWN IN NAILING SCHEDULE SHALL BE COMMON.
6. ALL NAILS SHALL BE CORROSION RESISTANT.

COUNTY APPROVAL:
SIGNATURE _____ DATE_____

GALVESTON COUNTY
BEACH PAVILION
CRYSTAL BEACH, TX 77650

Shelmark Project No : 17-217

SHELMARK ENGINEERING, L.L.C.
CIVIL | MARINE | PLANNING | STRUCTURAL
501 FM 517 ROAD EAST | DICKINSON, TEXAS 77539
TX FIRM NO. F-2113

STATE OF TEXAS
MARCUS J. MICHNA
84739
LICENSED PROFESSIONAL ENGINEER
12-22-17

DATE	REVISION

CONSTRUCTION DOCUMENTS

DATE ISSUED:
12/22/2017

S0.02

GENERAL NOTES

COUNTY APPROVAL:
SIGNATURE _____ DATE_____

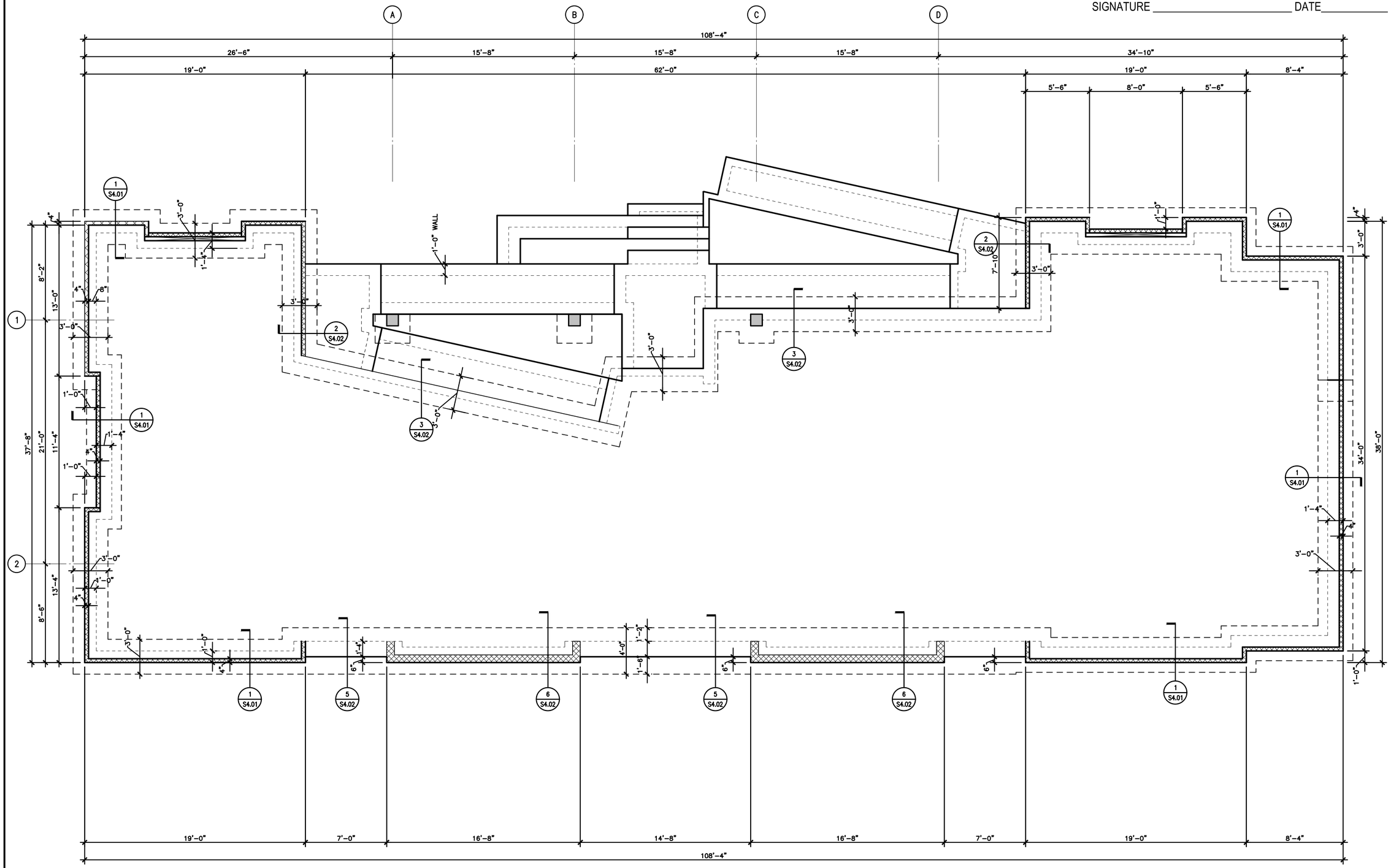

FOUNDATION STEM WALL / FOOTING PLAN

SCALE: 1/4"=1'-0"

GALVESTON COUNTY BEACH PAVILION CRYSTAL BEACH, TX 77650

Shelmark Project No : 17-217

SHELMARK ENGINEERING, L.L.C.
CIVIL | MARINE | PLANNING | STRUCTURAL
921 FM 517 ROAD EAST | DICKINSON, TEXAS 77539
TX FIRM NO. F-2113

STATE OF TEXAS
MARCUS J. MICHNA
84739
LICENSED
PROFESSIONAL ENGINEER
12-22-2017

DATE	REVISION

CONSTRUCTION DOCUMENTS

DATE ISSUED:
12/22/2017

S1.01

FOUNDATION STEM WALL FOOTING PLAN

COUNTY APPROVAL:
SIGNATURE _____ DATE_____

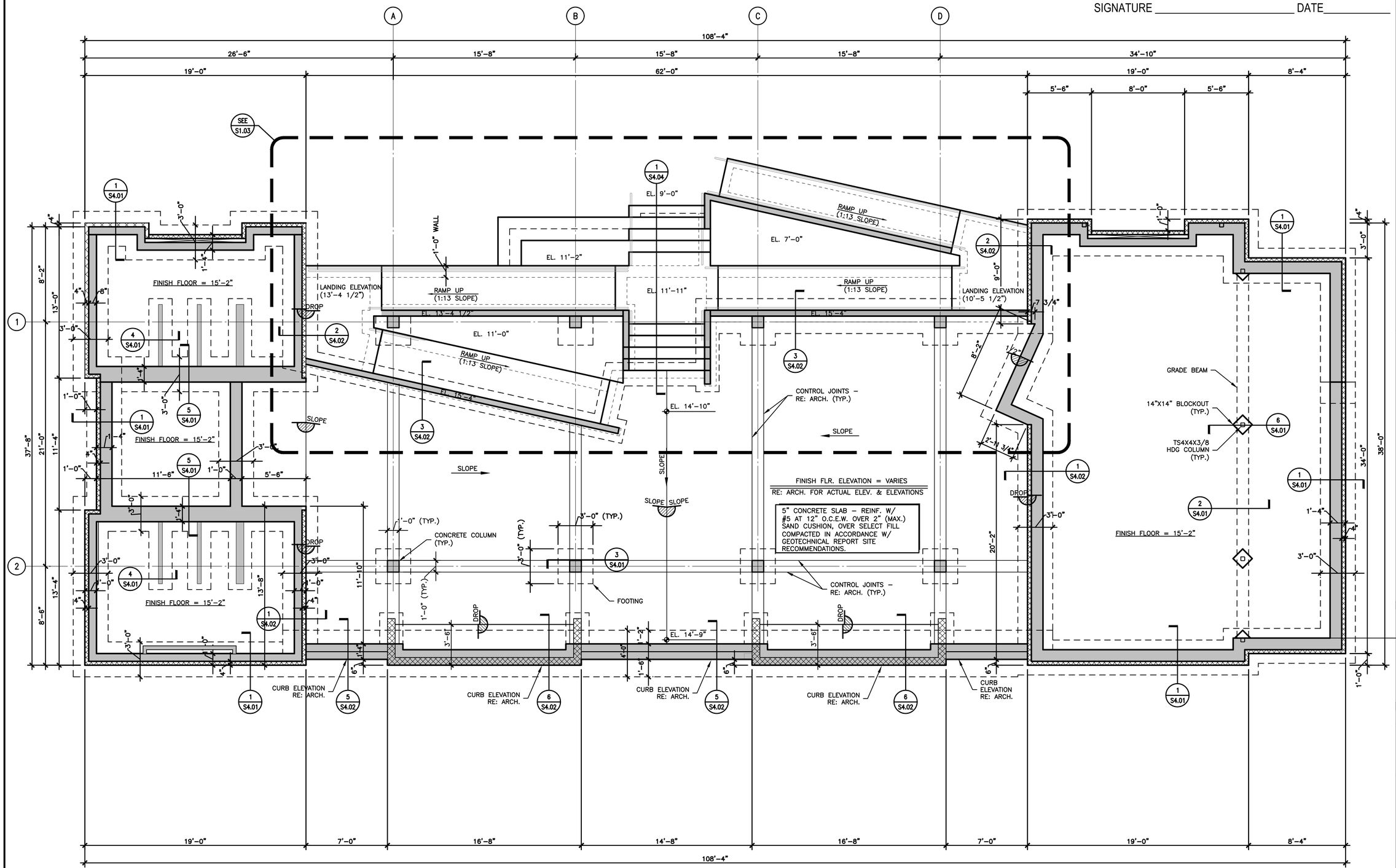

FOUNDATION PLAN

SCALE: 1/4"=1'-0"

GALVESTON COUNTY BEACH PAVILION CRYSTAL BEACH, TX 77650

Shelmark Project No : 17-217

SHELMARK ENGINEERING, L.L.C.
CIVIL | MARINE | PLANBING | STRUCTURAL
921 FM 517 ROAD EAST | DICKINSON, TEXAS 77539
TX FIRM NO. F-2113

STATE OF TEXAS
MARCUS J. MICHNA
84739
LICENSED PROFESSIONAL ENGINEER
12-22-2017

DATE	REVISION

CONSTRUCTION DOCUMENTS

DATE ISSUED:
12/22/2017

S1.02

FOUNDATION PLAN

COUNTY APPROVAL:
SIGNATURE _____ DATE_____

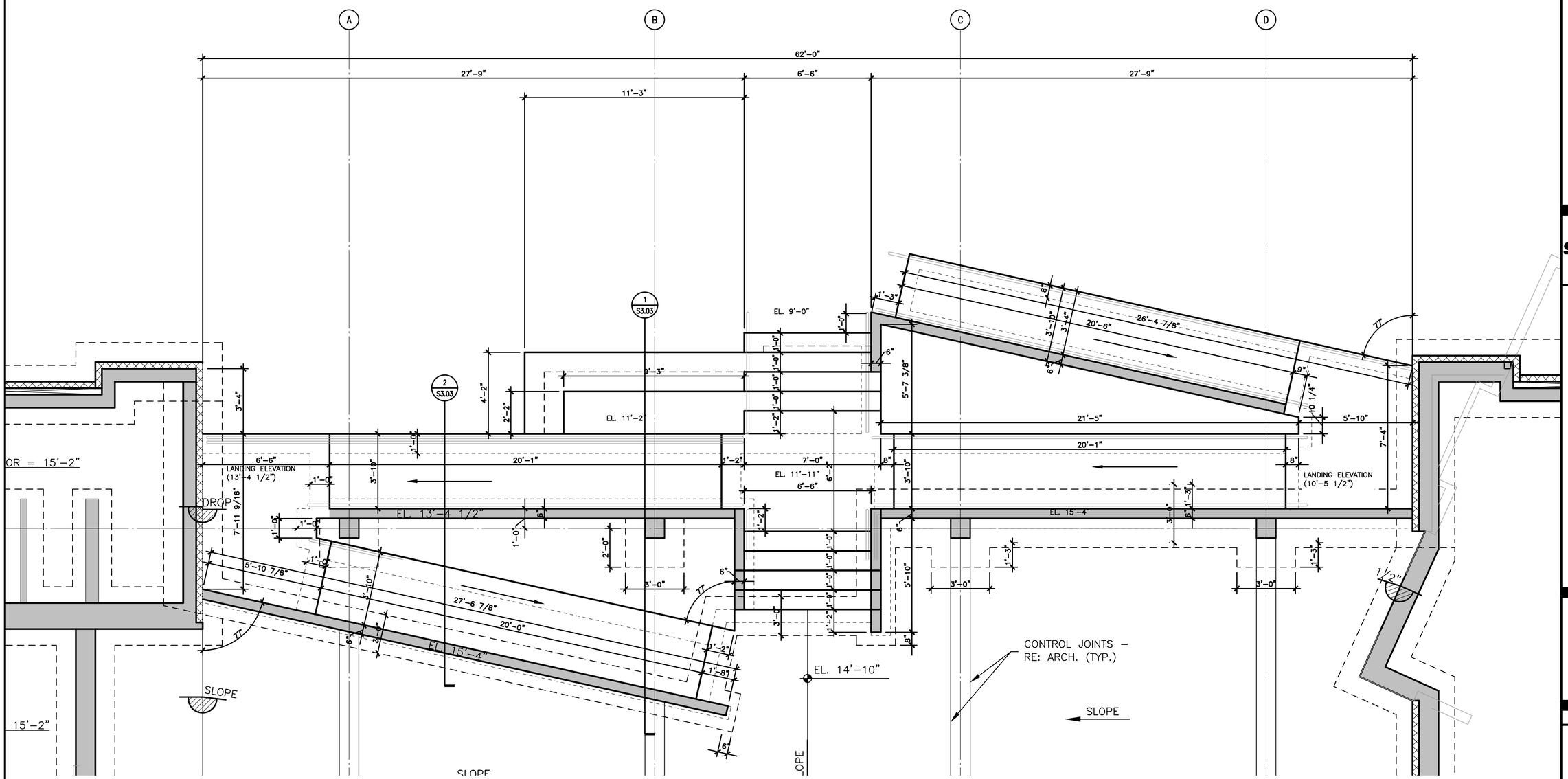

ENLARGED RAMP / STAIR FOUNDATION PLAN

SCALE: 3/8"=1'-0"

GALVESTON COUNTY BEACH PAVILION CRYSTAL BEACH, TX 77650

Shelmark Project No : 17-217

SHELMARK ENGINEERING, L.L.C.
CIVIL | MARINE | PLANNING | STRUCTURAL
921 FM 517 ROAD EAST | DICKINSON, TEXAS 77539
TX FIRM NO. F-2113

STATE OF TEXAS
MARCUS J. MICHNA
84739
LICENSED PROFESSIONAL ENGINEER
12-22-2017

DATE	REVISION

CONSTRUCTION DOCUMENTS

DATE ISSUED:
12/22/2017

S1.03

ENLARGED RAMP-STAIR FOUNDATION PLAN

COUNTY APPROVAL:
SIGNATURE _____ DATE_____

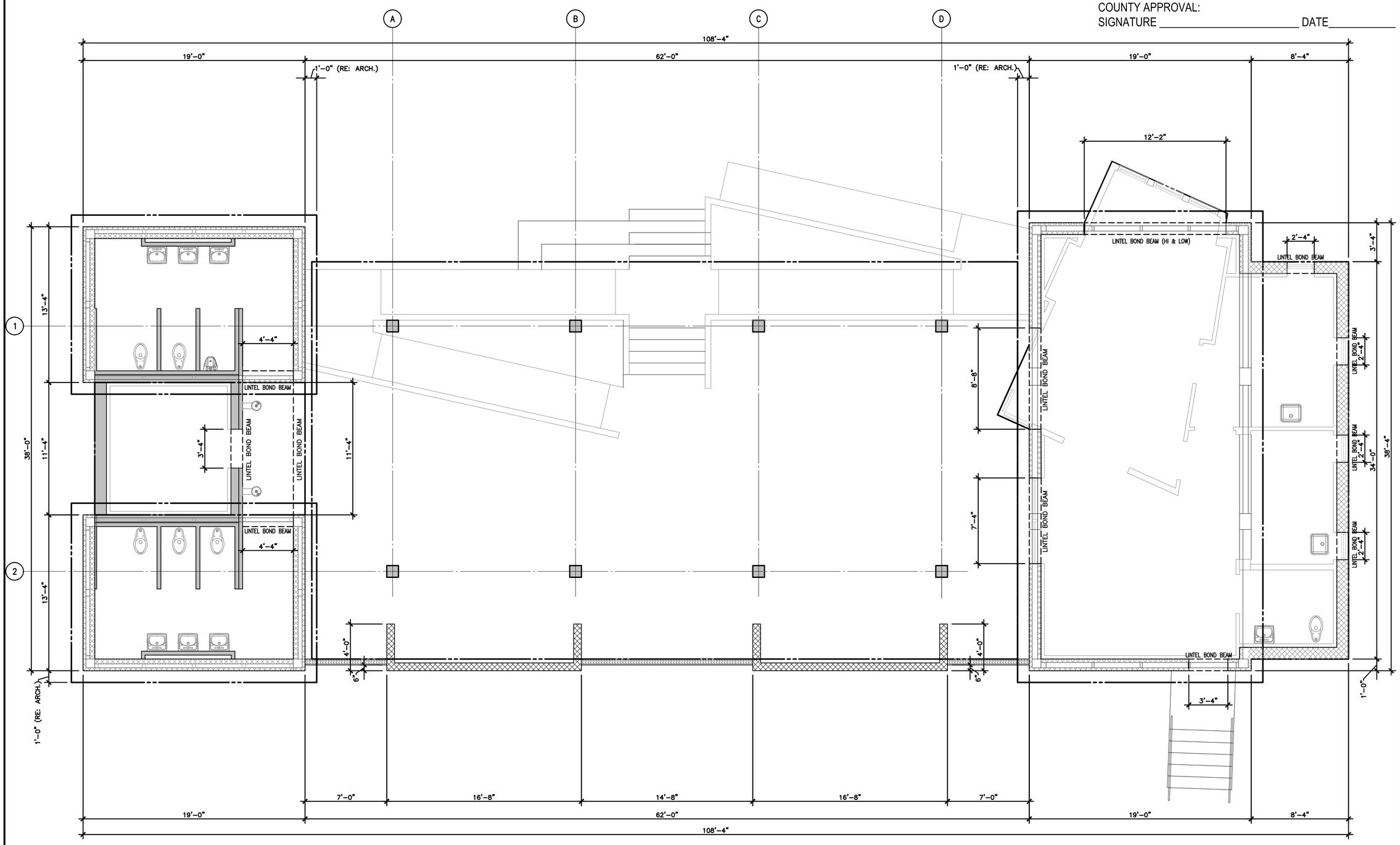

WALL LAYOUT

SCALE: 1/4"=1'-0"

GALVESTON COUNTY BEACH PAVILION CRYSTAL BEACH, TX 77650

Shelmark Project No : 17-217

SHELMARK ENGINEERING, L.L.C.
CIVIL | MARINE | PLANNING | STRUCTURAL
921 FM 517 ROAD EAST | DICKINSON, TEXAS 77539
TX FIRM NO. F-2113

STATE OF TEXAS
MARCUS J. MICHNA
84739
LICENSED
PROFESSIONAL ENGINEER
12-22-2017

DATE	REVISION

CONSTRUCTION DOCUMENTS

DATE ISSUED:
12/22/2017

S2.01

WALL LAYOUT

COUNTY APPROVAL:
SIGNATURE _____ DATE_____

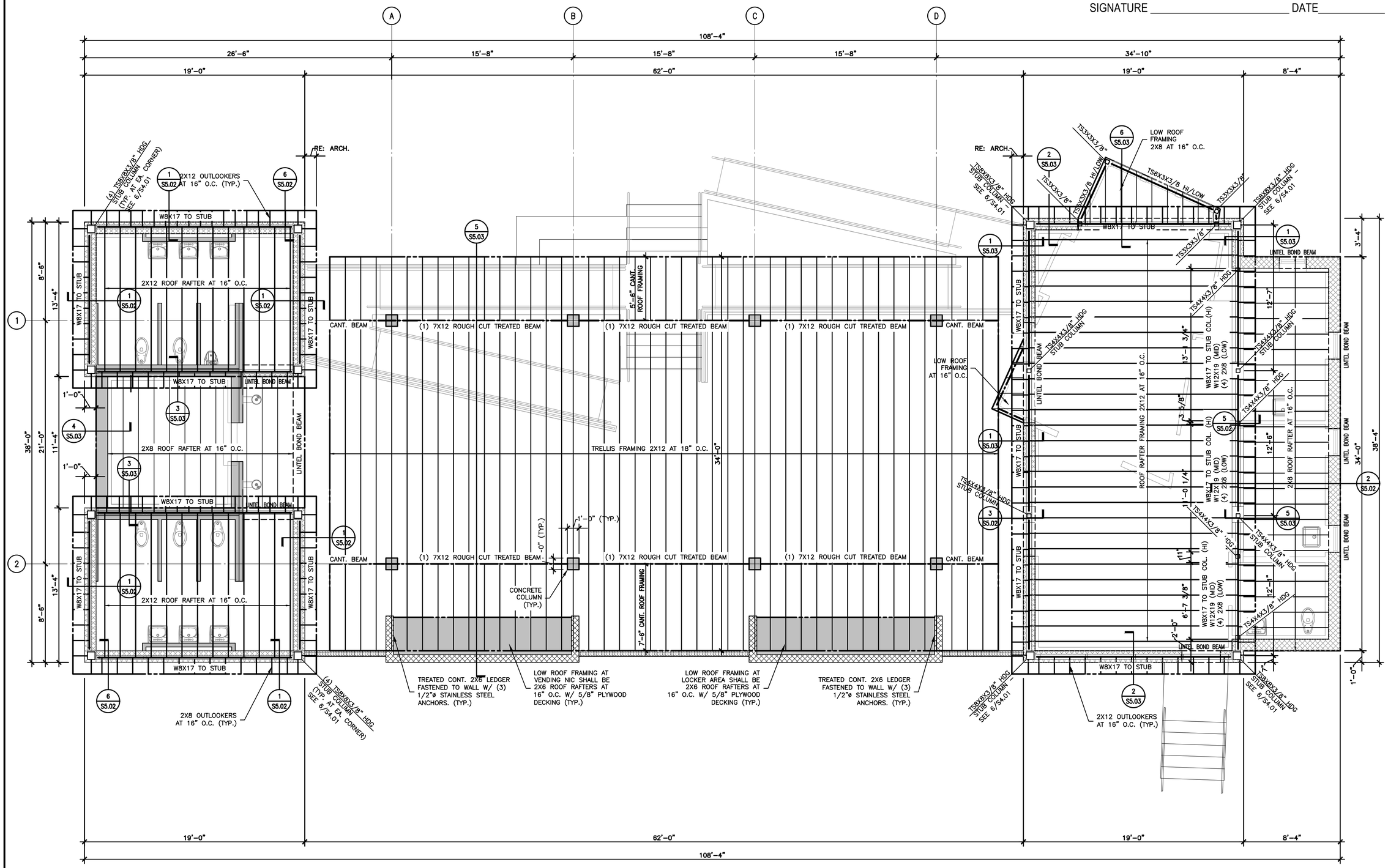

ROOF FRAMING PLAN

SCALE: 1/4"=1'-0"

GALVESTON COUNTY BEACH PAVILION CRYSTAL BEACH, TX 77650

Shelmark Project No : 17-217

SHELMARK ENGINEERING, L.L.C.
CIVIL | MARINE | PLANNING | STRUCTURAL
921 FM 517 ROAD EAST | DICKINSON, TEXAS 77539
TX FIRM NO. F-2113

STATE OF TEXAS
MARCUS J. MICHNA
84739
LICENSED PROFESSIONAL ENGINEER
12-22-2017

DATE	REVISION

CONSTRUCTION DOCUMENTS

DATE ISSUED:
12/22/2017

S3.01

ROOF FRAMING PLAN

COUNTY APPROVAL:
SIGNATURE _____ DATE_____

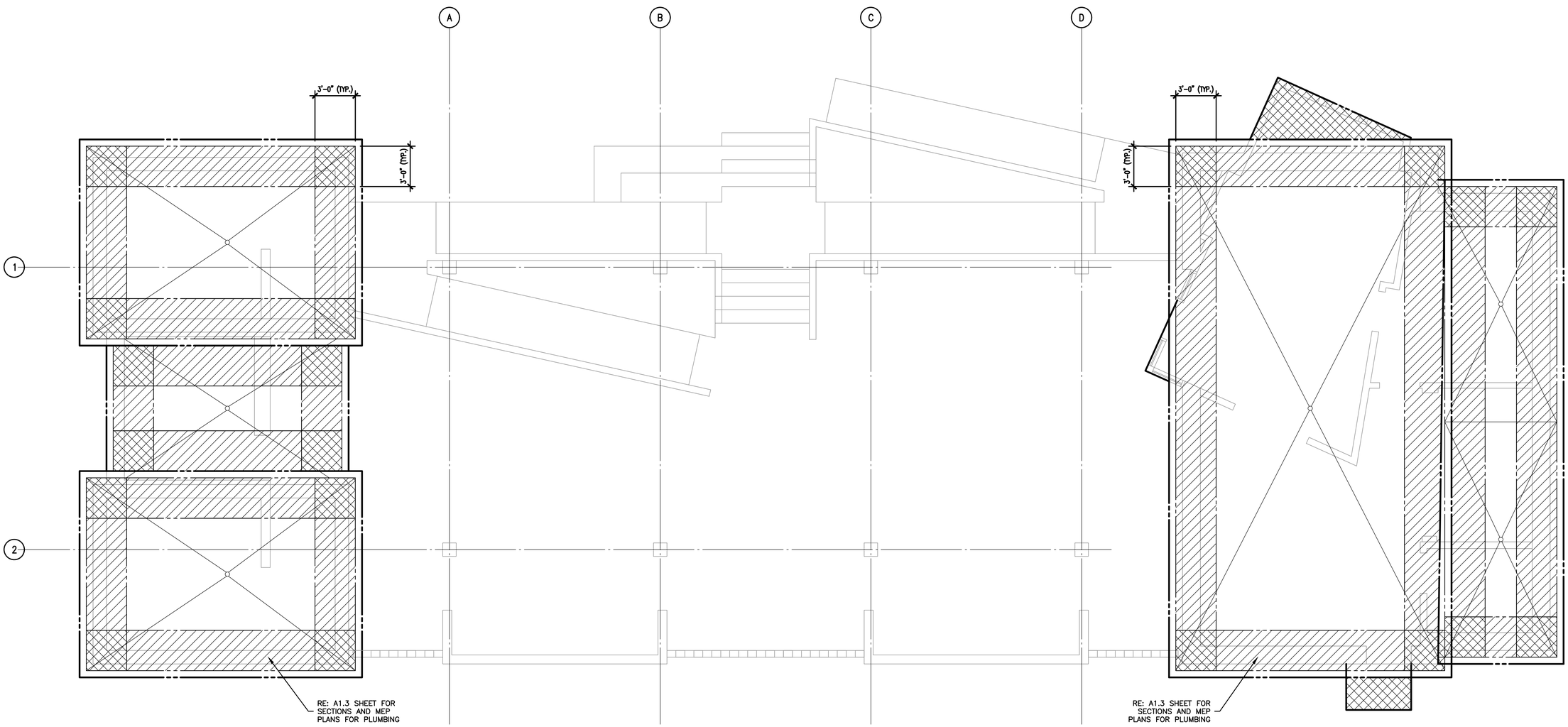

DESIGN WIND PRESSURES		
PRESSURE ZONE	EFFECTIVE AREA 10 S.F.	DESIGN PRESSURE (PSF)
ZONE 1		+16.4 / −40.2 PSF
ZONE 2		+16.4 / −67.3 PSF
ZONE 3		+16.4 / −101.4 PSF

ROOF PLAN
SCALE: 1/4"=1'-0"

GALVESTON COUNTY BEACH PAVILION CRYSTAL BEACH, TX 77650

Shelmark Project No : 17-217

SHELMARK ENGINEERING, L.L.C.
CIVIL | MARINE | PLANNING | STRUCTURAL
921 FM 517 ROAD EAST | DICKINSON, TEXAS 77539
TX FIRM NO. F-2113

STATE OF TEXAS
MARCUS J. MICHNA
84739
LICENSED
PROFESSIONAL ENGINEER
12-22-2017

DATE	REVISION

CONSTRUCTION DOCUMENTS

DATE ISSUED:
12/22/2017

S3.02

ROOF DESIGN PRESSURE PLAN

COUNTY APPROVAL:
SIGNATURE _____ DATE_____

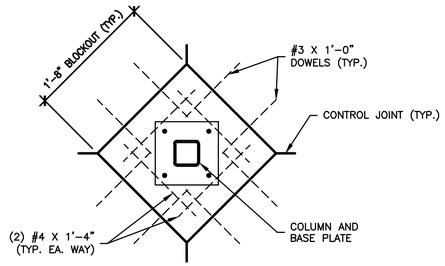

A TYP. BLOCKOUT DETAIL

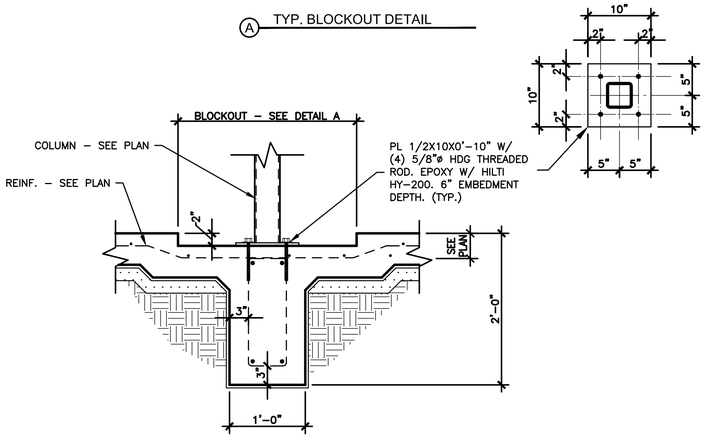

6 SECTION at GRADE BEAM

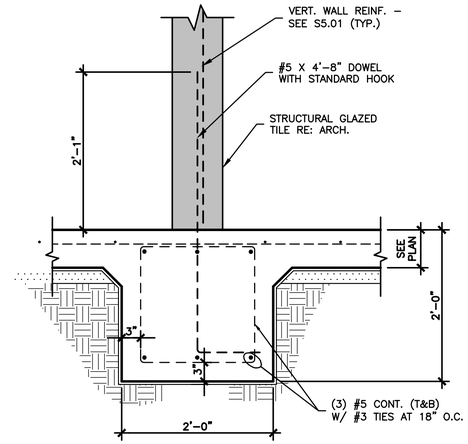

4 SECTION at GRADE BEAM

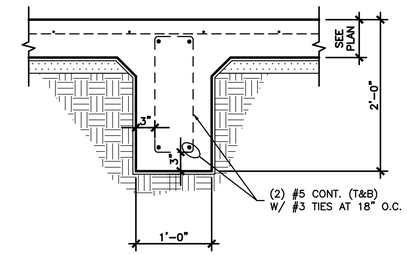

2 SECTION at GRADE BEAM

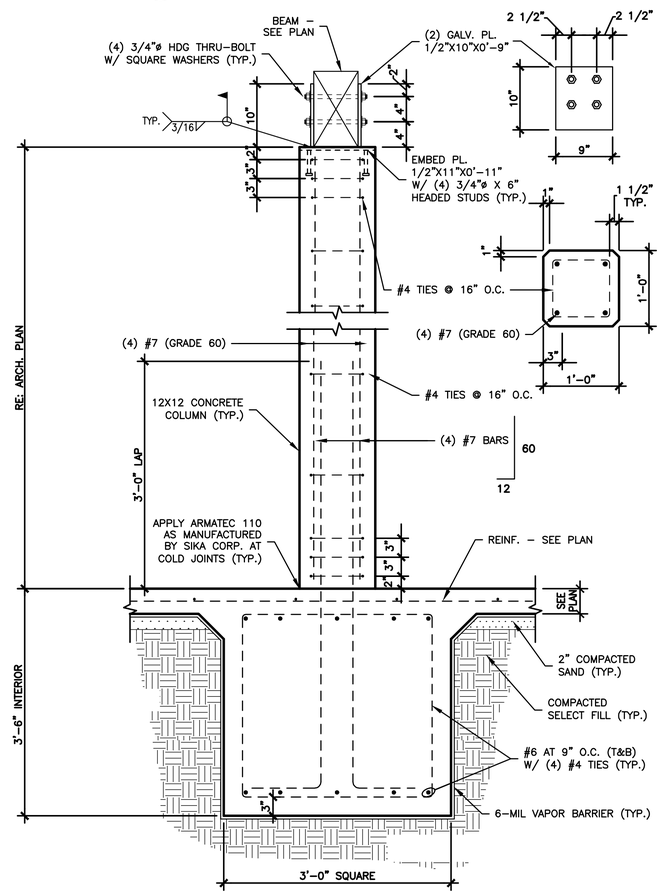

3 SECTION at FOOTING

FOUNDATION DETAILS

SCALE: 1"=1'-0" (U.N.O.)

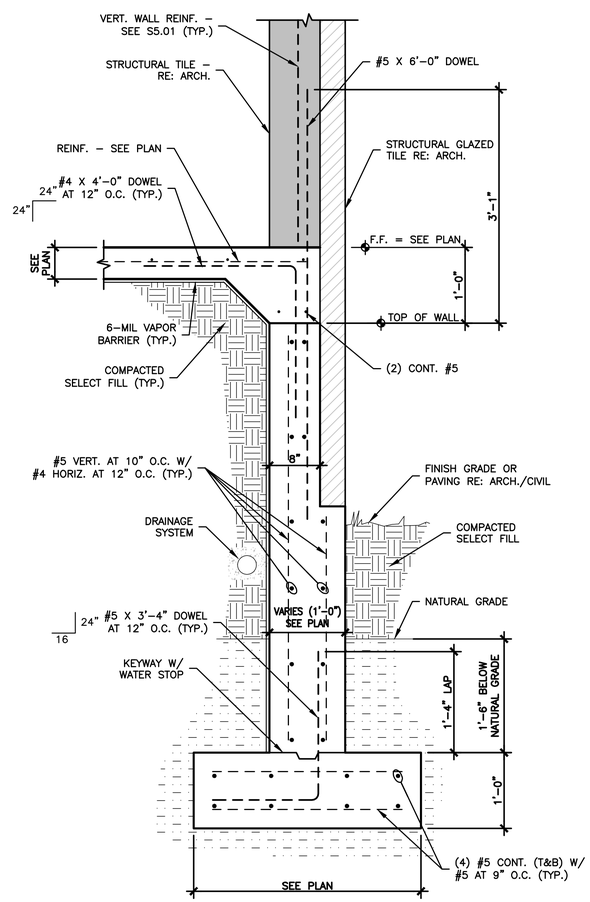

1 SECTION at STEM WALL AND FOOTING

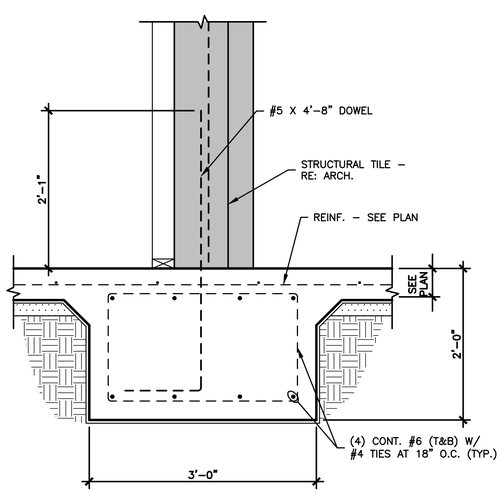

5 SECTION at GRADE BEAM

GALVESTON COUNTY
BEACH PAVILION
CRYSTAL BEACH, TX 77650

Shelmark Project No : 17-217

SHELMARK ENGINEERING, L.L.C.
CIVIL | MARINE | PLANNING | STRUCTURAL
921 FM 517 ROAD EAST | DICKINSON, TEXAS 77539
TX FIRM NO. F-2113

STATE OF TEXAS
MARCUS J. MICHNA
84739
LICENSED PROFESSIONAL ENGINEER
12-22-2017

DATE	REVISION

CONSTRUCTION DOCUMENTS

DATE ISSUED:
12/22/2017

S4.01

FOUNDATION DETAILS

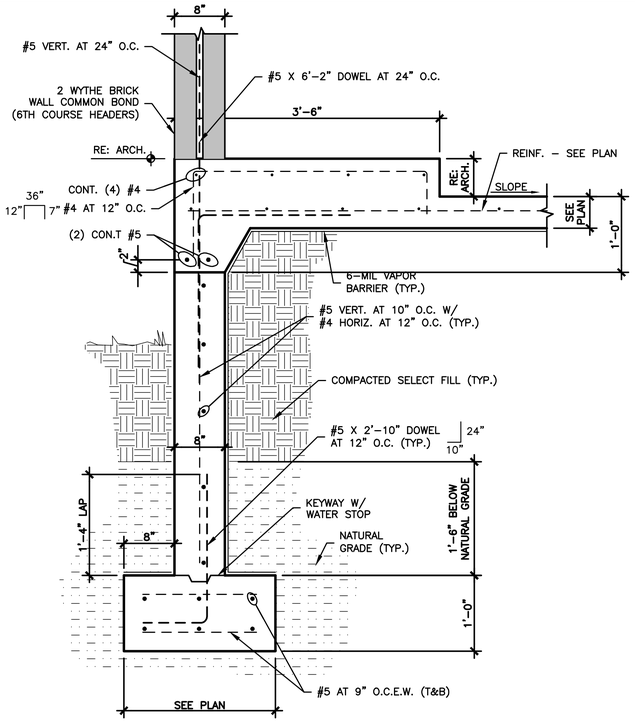

6 SECTION at STEM WALL AND FOOTING

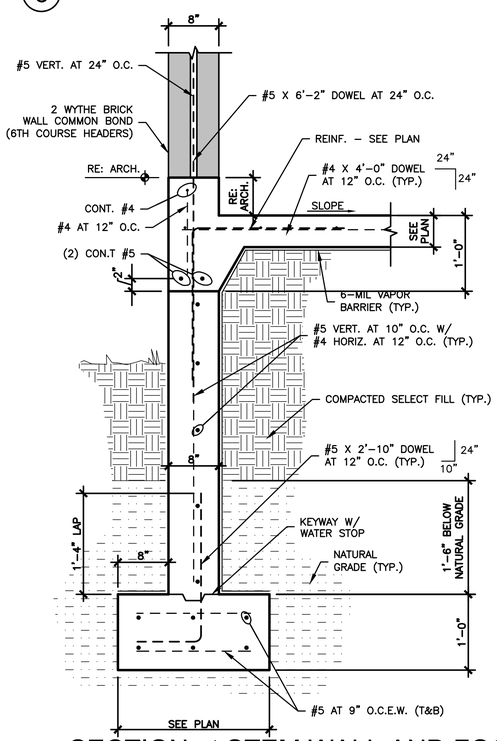

5 SECTION at STEM WALL AND FOOTING

NOTE:
PROVIDE CONTROL JOINTS (C.J.) IN SLAB SO THAT NO DISTANCE IS GREATER THAN 20 FEET AND THE SQUARE FOOTAGE IS LESS THAN 400 SQ. FT. CONSTRUCTION JOINTS MAY BE PLACED AT CONTRACTORS DISCRETION.

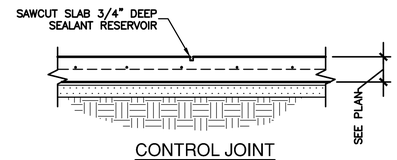

CONTROL JOINT

4 SLAB JOINT DETAIL

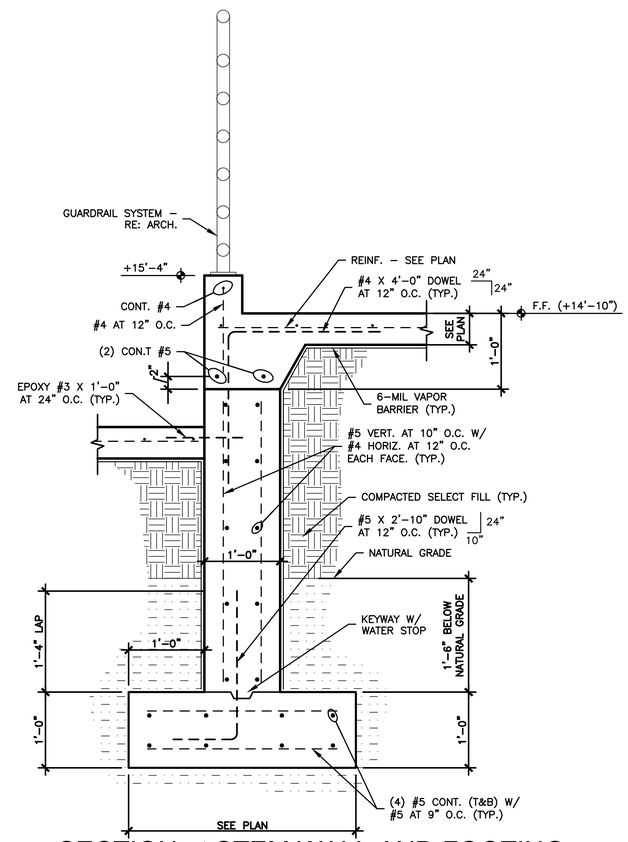

3 SECTION at STEM WALL AND FOOTING

FOUNDATION DETAILS

SCALE: 1"=1'-0" (U.N.O.)

COUNTY APPROVAL:
SIGNATURE _____ DATE_____

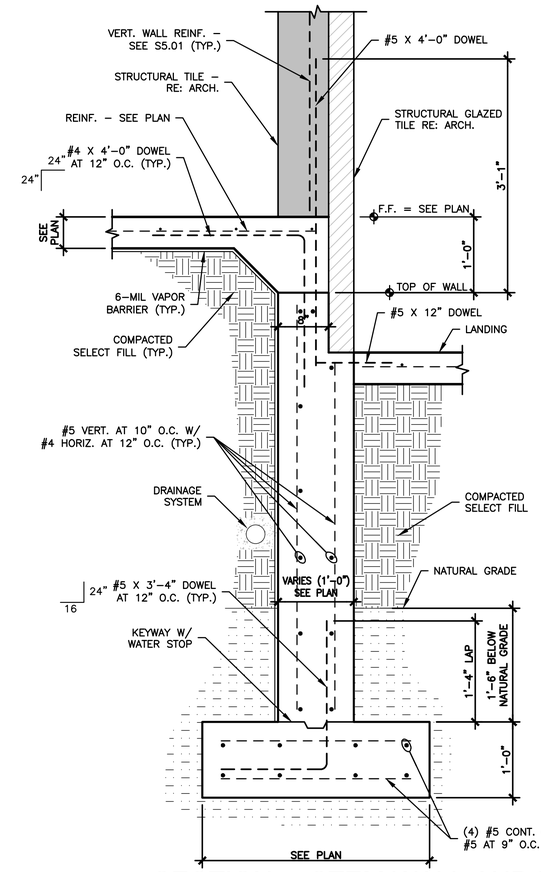

2 SECTION at STEM WALL AND FOOTING

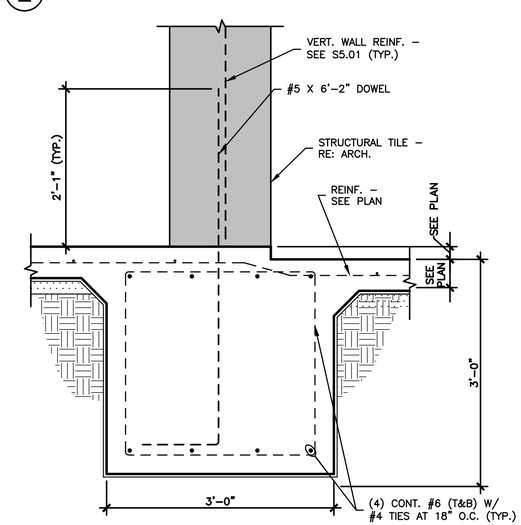

1 SECTION at GRADE BEAM

GALVESTON COUNTY
BEACH PAVILION
CRYSTAL BEACH, TX 77650

Shelmark Project No : 17-217

SHELMARK ENGINEERING, L.L.C.
CIVIL | MARINE | PLANNING | STRUCTURAL
921 FM 517 ROAD EAST | DICKINSON, TEXAS 77539
TX FIRM NO. F-2113

STATE OF TEXAS
MARCUS J. MICHNA
84739
LICENSED PROFESSIONAL ENGINEER
12-22-2017

DATE	REVISION

CONSTRUCTION DOCUMENTS

DATE ISSUED:
12/22/2017

S4.02

FOUNDATION DETAILS

COUNTY APPROVAL:
SIGNATURE _____ DATE_____

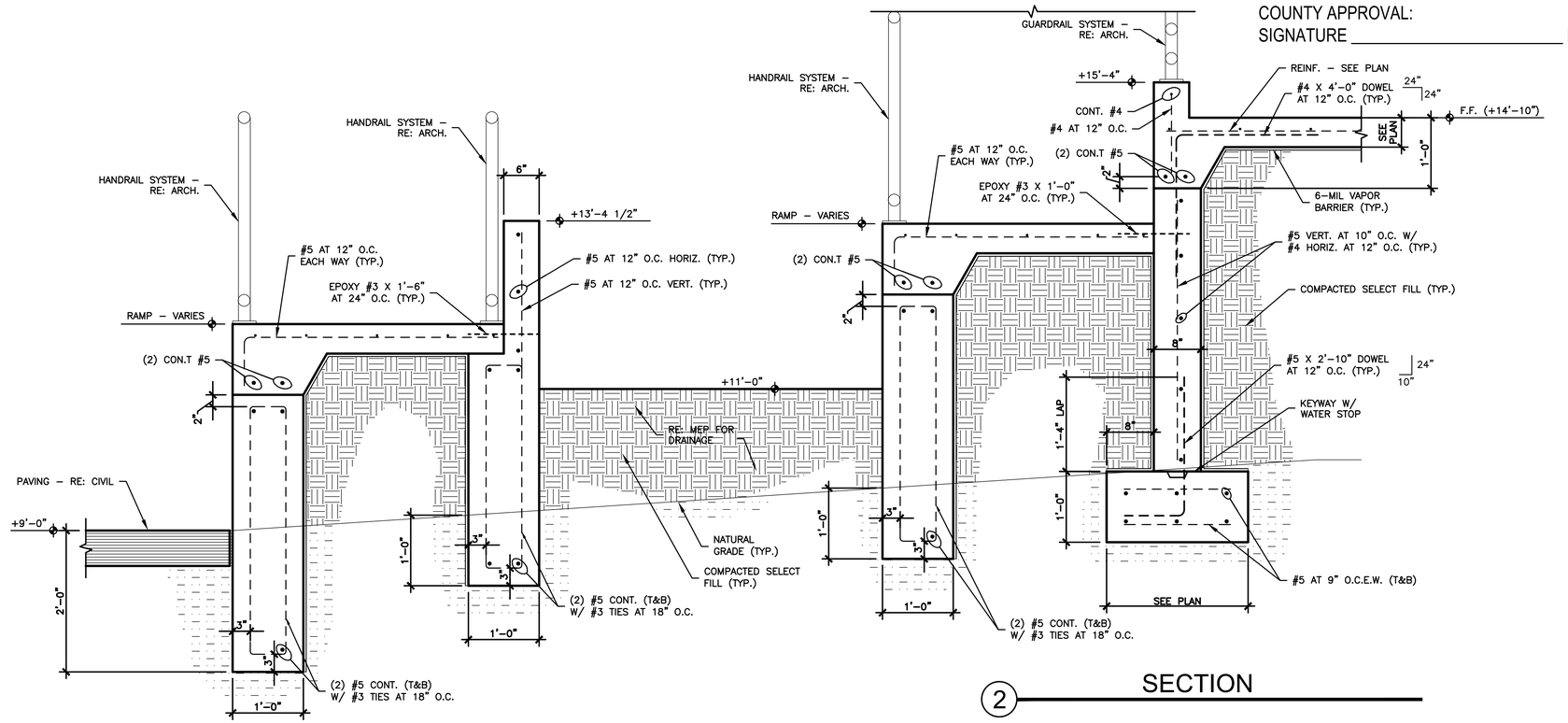

2 SECTION

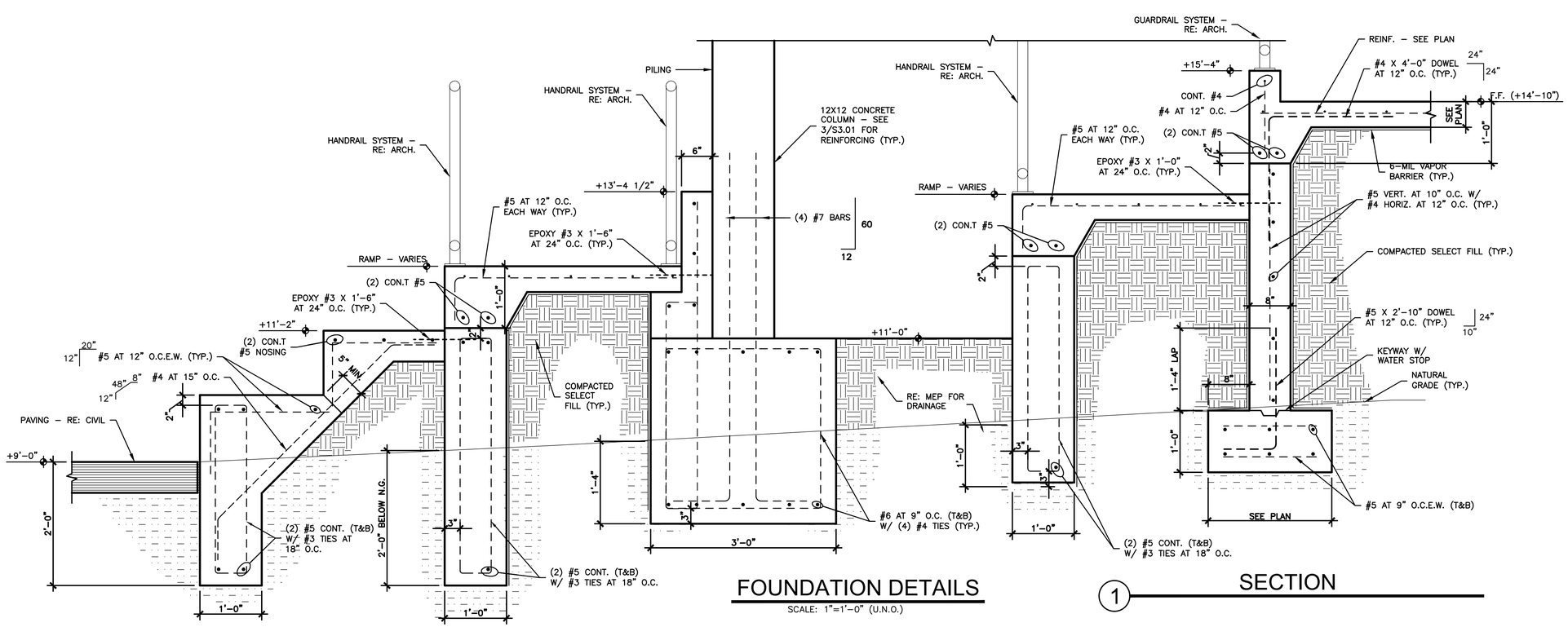

FOUNDATION DETAILS

SCALE: 1"=1'–0" (U.N.O.)

1 SECTION

GALVESTON COUNTY
BEACH PAVILION
CRYSTAL BEACH, TX 77650

Shelmark Project No : 17–217

SHELMARK ENGINEERING, L.L.C.
CIVIL | MARINE | PLANNING | STRUCTURAL
921 FM 517 ROAD EAST | DICKINSON, TEXAS 77539
TX FIRM NO. F-2113

STATE OF TEXAS
MARCUS J. MICHNA
84739
LICENSED PROFESSIONAL ENGINEER
12-22-2017

DATE	REVISION

CONSTRUCTION DOCUMENTS

DATE ISSUED:
12/22/2017

S4.03

FOUNDATION DETAILS

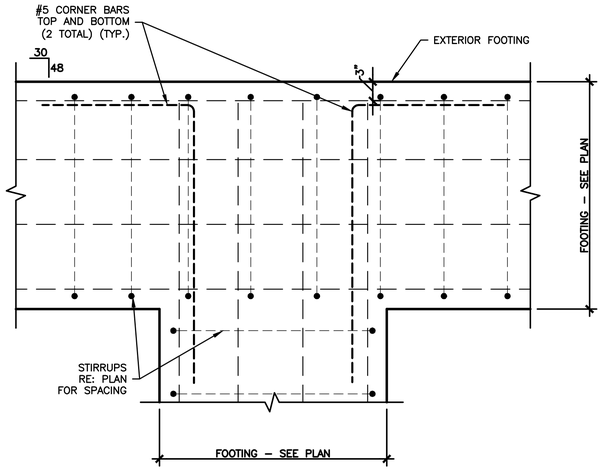

4 FOOTING REINFORCEMENT DETAIL

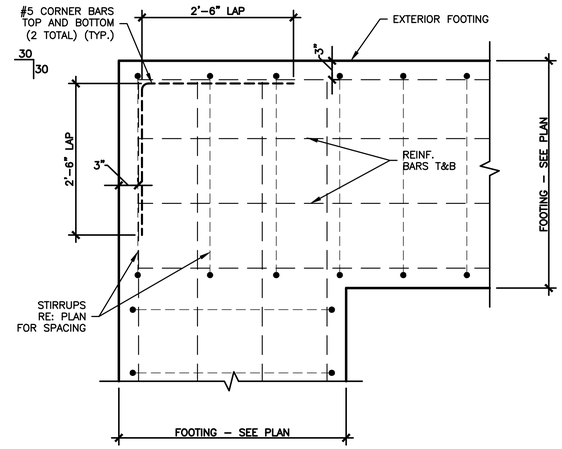

3 FOOTING REINFORCEMENT DETAIL

COUNTY APPROVAL:
SIGNATURE _____ DATE_____

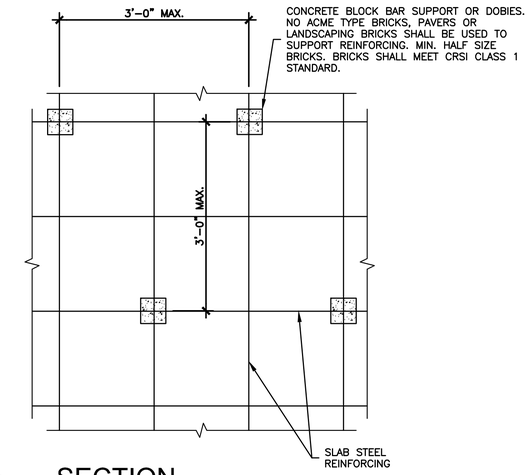

2 SECTION

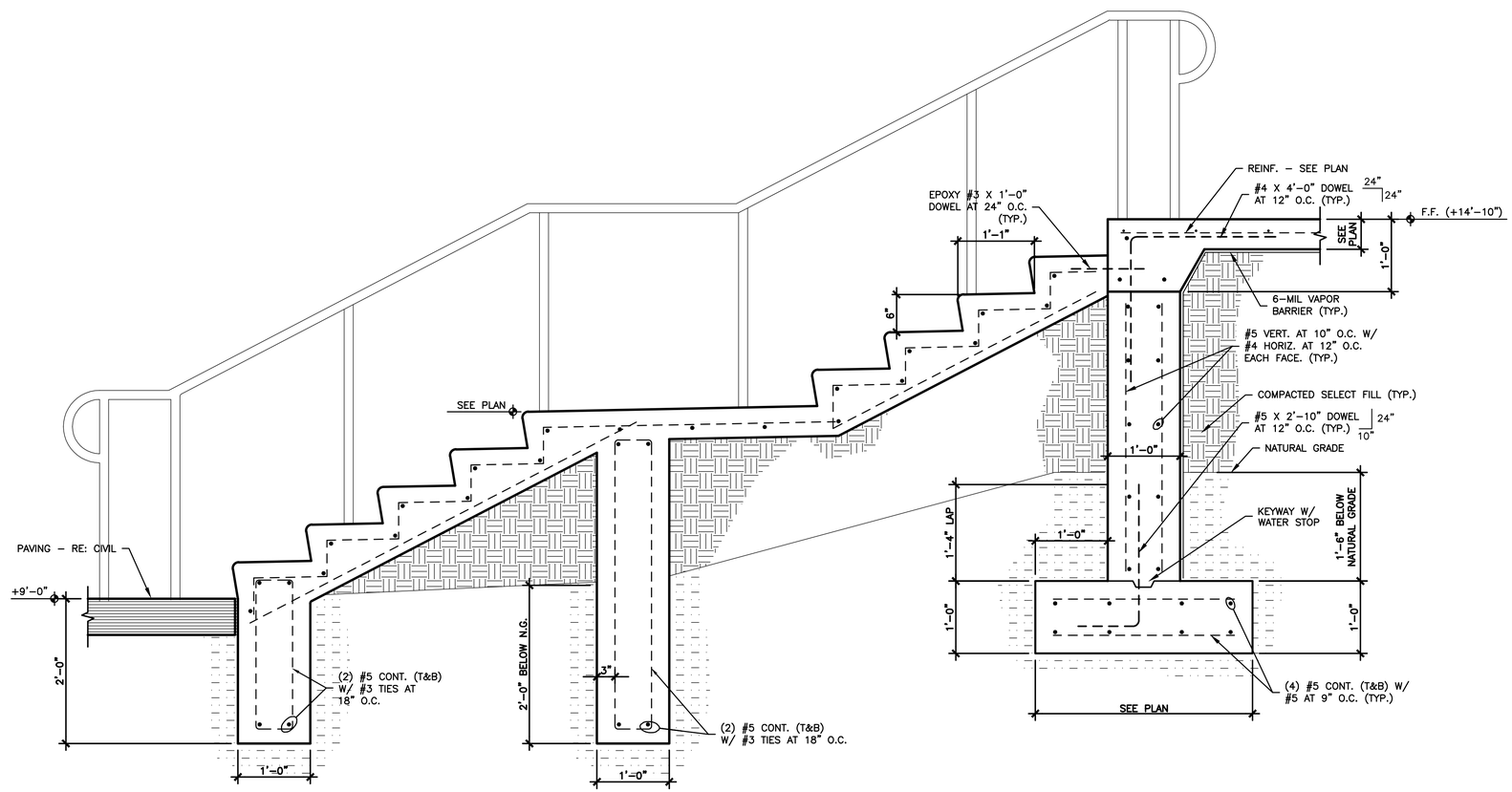

1 SECTION at STAIRS

FOUNDATION DETAILS

SCALE: 1"=1'–0" (U.N.O.)

GALVESTON COUNTY
BEACH PAVILION
CRYSTAL BEACH, TX 77650

Shelmark Project No : 17–217

SHELMARK ENGINEERING, L.L.C.
CIVIL | MARINE | PLANNING | STRUCTURAL
921 FM 517 ROAD EAST | DICKINSON, TEXAS 77539
TX FIRM NO. F-2113

STATE OF TEXAS
MARCUS J. MICHNA
84739
LICENSED
PROFESSIONAL ENGINEER
12-22-2017

DATE	REVISION

CONSTRUCTION DOCUMENTS

DATE ISSUED:
12/22/2017

S4.04

FOUNDATION DETAILS

COUNTY APPROVAL:
SIGNATURE _____ DATE_____

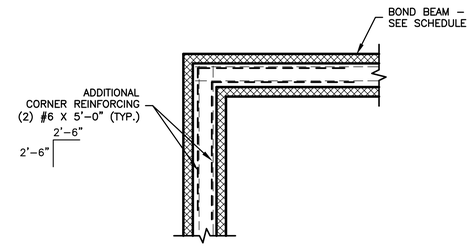

2 BOND BEAM CORNER DETAIL

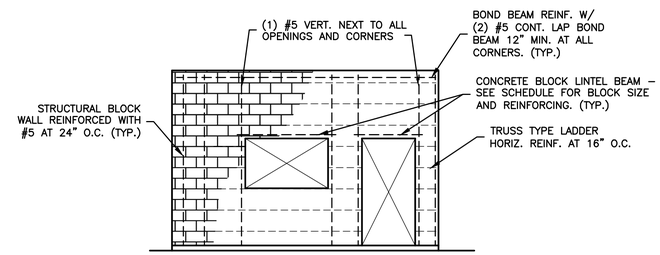

NOTE FOR STRUCTURAL BLOCK WALL:

1. ALL MASONRY GROUT SHALL BE PER TABLE 1; ALL MORTAR PER TABLE 2.
2. FILL ALL REINFORCED CELLS WITH GROUT.
3. EXTEND LINTEL BEAM 8" BEYOND OPENING.
4. COMPRESSIVE STRENGTH OF MASONRY SHALL BE 1500 PSI AT 28 DAYS.

CONCRETE BLOCK LINTEL SCHEDULE

WALL THICKNESS \ MAXIMUM SPAN	4'–6"	9'–0"	12'–9"
4"	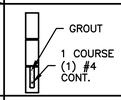	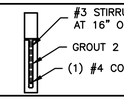	N/A
6" 8" & 12"	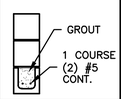	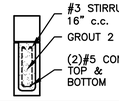	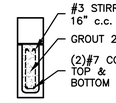

TABLE 1. GROUT PROPORTIONS BY VOLUME

TYPE	PARTS BY VOLUME OF PORTALND CEMENT OR PORTLAND BLAST–FURNACE SLAG CEMENT	PARTS BY VOLUME OF HYDRATED LIME OR LIME PUTTY	AGGREGATE MEASURED IN A DAMP, LOOSE CONDITION	
			FINE	COARSE
FINE GROUT (<4" WIDE CAVITY)	1	0 TO 1/10	2 1/4 TO 3 TIMES THE SUM OF THE VOLUMES OF THE CEMENTITIOUS MATERIAL	
COARSE GROUT (>4" WIDE CAVITY)	1	0 TO 1/10	2 1/4 TO 3 TIMES THE SUM OF THE VOLUMES OF THE CEMENTITIOUS MATERIAL	1 TO 2 TIMES THE SUM OF THE VOLUMES OF THE CEMENTITIOUS MATERIAL

TABLE 2. MORTAR PROPORTIONS BY VOLUME

MATERIAL	TYPE	PORTLAND CEMENT OR CEMENT BLEND	MASONRY CEMENT	HYDRATED LIME OR LIME PUTTY	AGGREGATE RATIO (MEASURED IN DAMP, LOOSE CONDITION)
CEMENT–LIME	S	1	—	OVER 1/4 TO 1/2	NOT LESS THAN 2 1/4 AND NOT MORE THAN 3 TIMES THE SUM OF THE SEPARATE VOLUMES OF CEMENTITIOUS MATERIAL
MASONRY/ CEMENT	S	1/2	1	—	

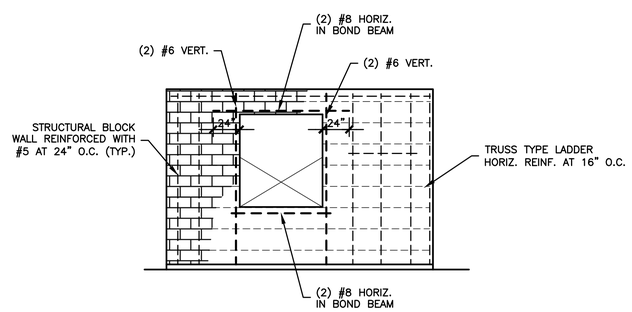

3 BLOCK WALL AT WAITING ROOM

1 BLOCK WALL SCHEDULE

GALVESTON COUNTY BEACH PAVILION CRYSTAL BEACH, TX 77650

Shelmark Project No : 17–217

SHELMARK ENGINEERING, L.L.C.
CIVIL | MARINE | PLANNING | STRUCTURAL
921 FM 517 ROAD EAST | DICKINSON, TEXAS 77539
TX FIRM NO. F-2113

STATE OF TEXAS
MARCUS J. MICHNA
84739
LICENSED
PROFESSIONAL ENGINEER
12-22-2017

DATE	REVISION

CONSTRUCTION DOCUMENTS

DATE ISSUED:
12/22/2017

S5.01

BLOCK WALL DETAILS

COUNTY APPROVAL:
SIGNATURE _____ DATE_____

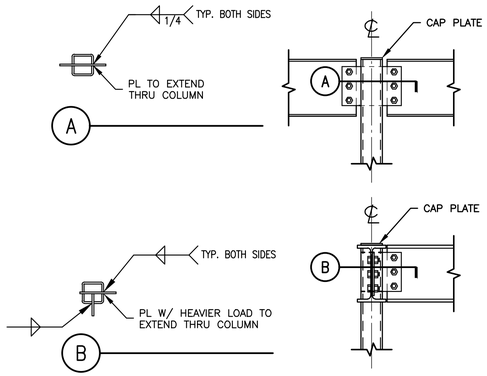

7 SIMPLE BEAM TO COL. CONNECTIONS

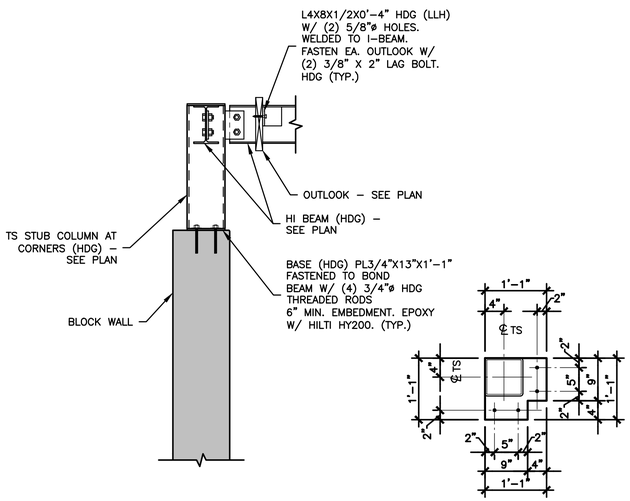

6 SECTION

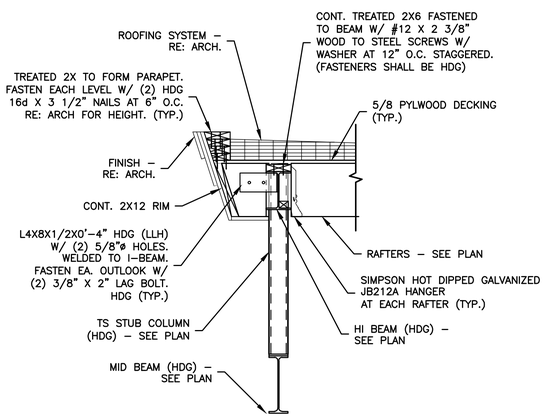

5 SECTION

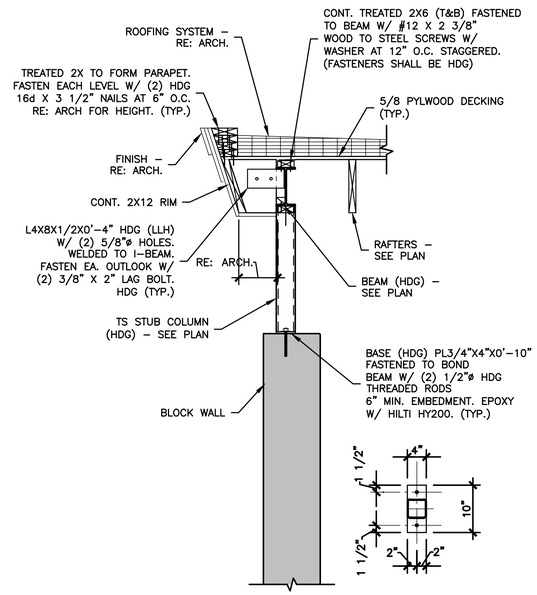

4 SECTION

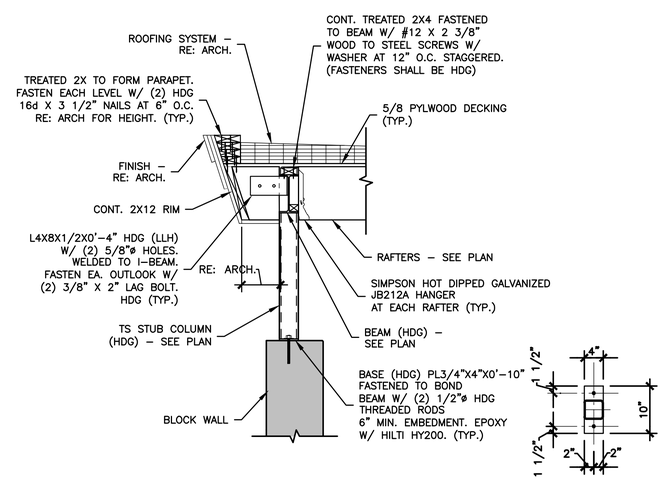

3 SECTION

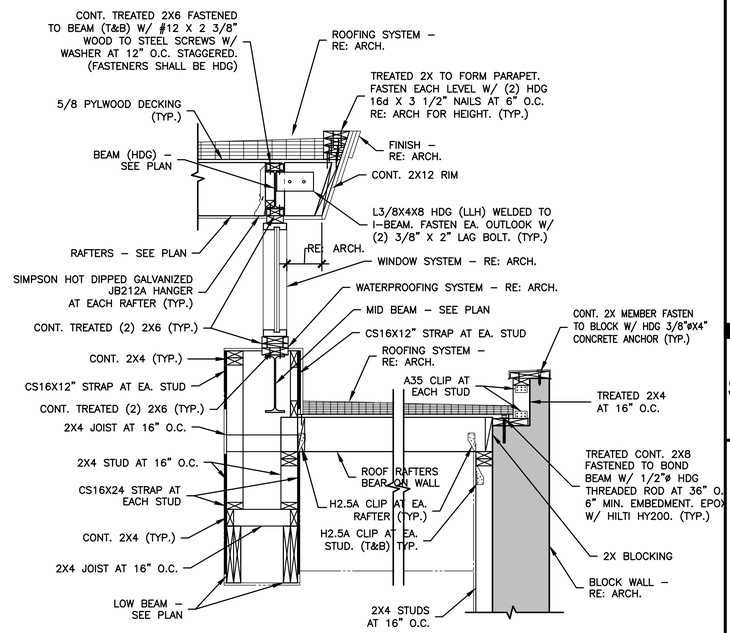

2 SECTION

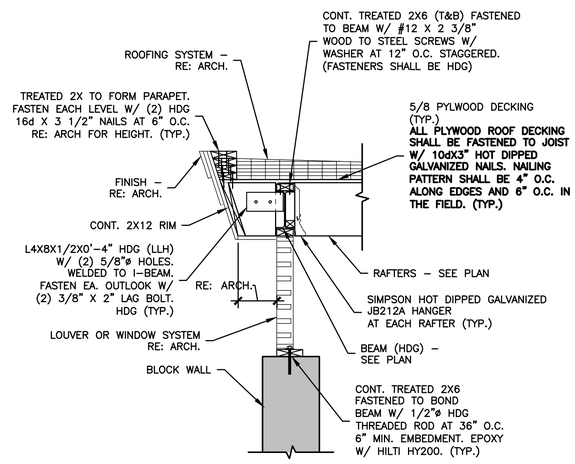

1 SECTION

GALVESTON COUNTY
BEACH PAVILION
CRYSTAL BEACH, TX 77650

Shelmark Project No : 17-217

SHELMARK ENGINEERING, L.L.C.
CIVIL | MARINE | PLANNING | STRUCTURAL
921 FM 517 ROAD EAST | DICKINSON, TEXAS 77539
TX FIRM NO. F-2113

STATE OF TEXAS
MARCUS J. MICHNA
84739
LICENSED
PROFESSIONAL ENGINEER
12-22-2017

DATE	REVISION

CONSTRUCTION DOCUMENTS

DATE ISSUED:
12/22/2017

S5.02

FRAMING DETAILS

COUNTY APPROVAL:
SIGNATURE _____ DATE_____

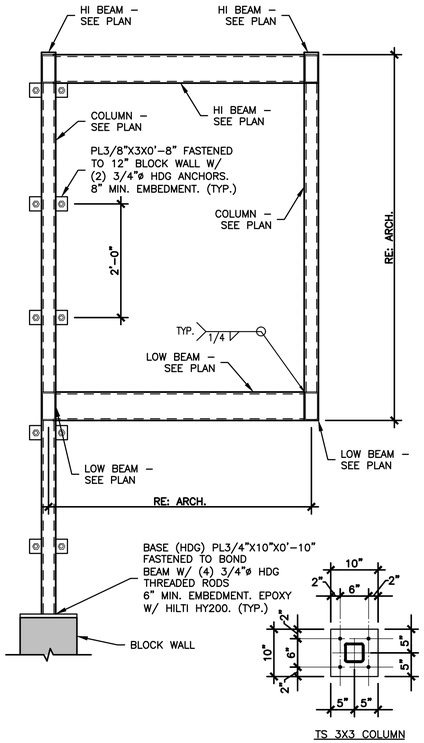

6 SECTION

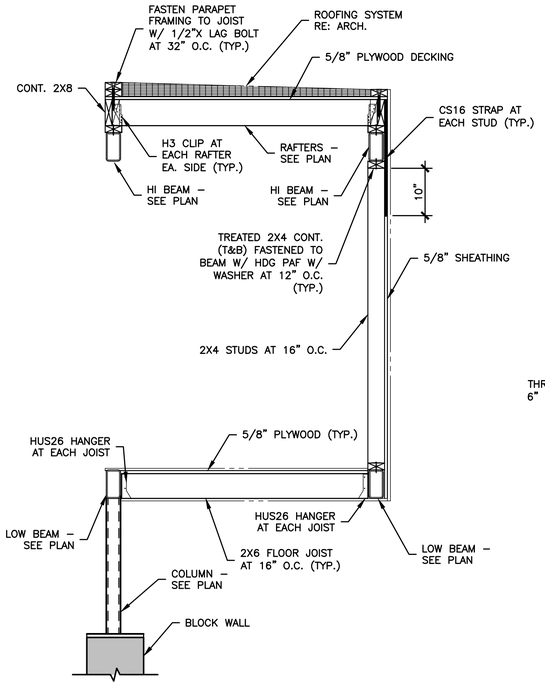

4 SECTION

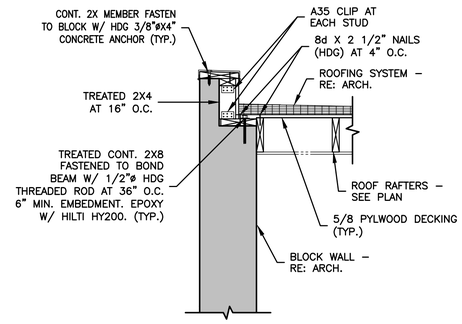

2 SECTION

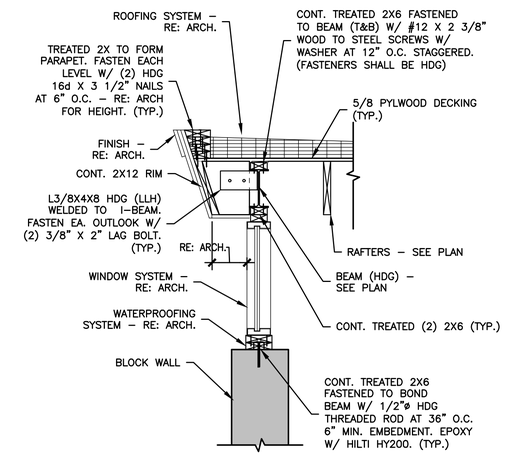

1 SECTION

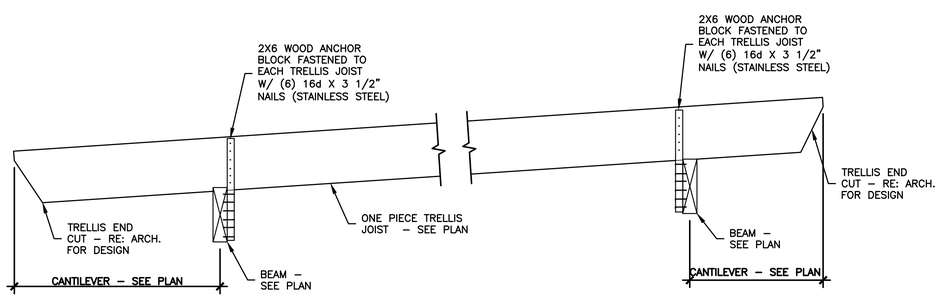

5 SECTION

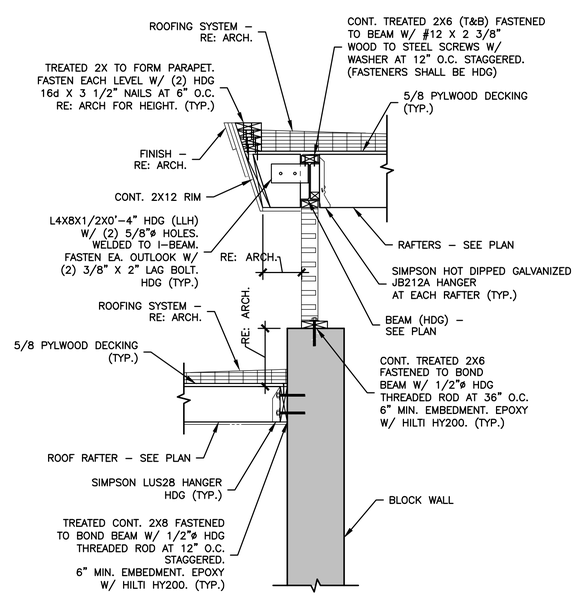

3 SECTION

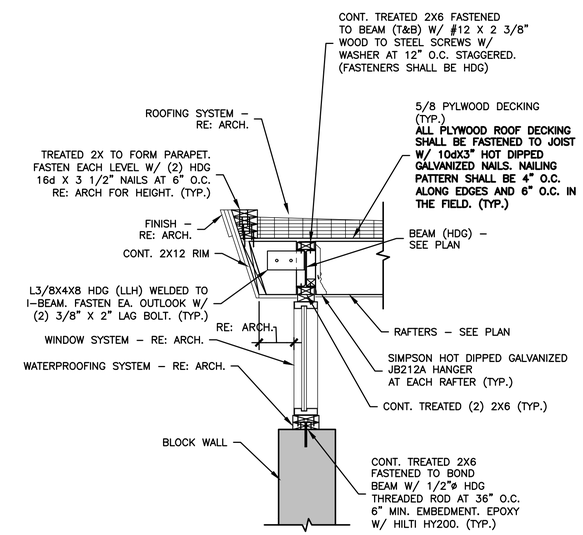

GALVESTON COUNTY BEACH PAVILION CRYSTAL BEACH, TX 77650

Shelmark Project No : 17–217

SHELMARK ENGINEERING, L.L.C.
CIVIL | MARINE | PLANNING | STRUCTURAL
921 FM 517 ROAD EAST | DICKINSON, TEXAS 77539
TX FIRM NO. F-2113

STATE OF TEXAS
MARCUS J. MICHNA
84739
LICENSED PROFESSIONAL ENGINEER
12-22-2017

DATE	REVISION

CONSTRUCTION DOCUMENTS

DATE ISSUED:
12/22/2017

S5.03

FRAMING DETAILS

COUNTY APPROVAL:
SIGNATURE _____ DATE_____

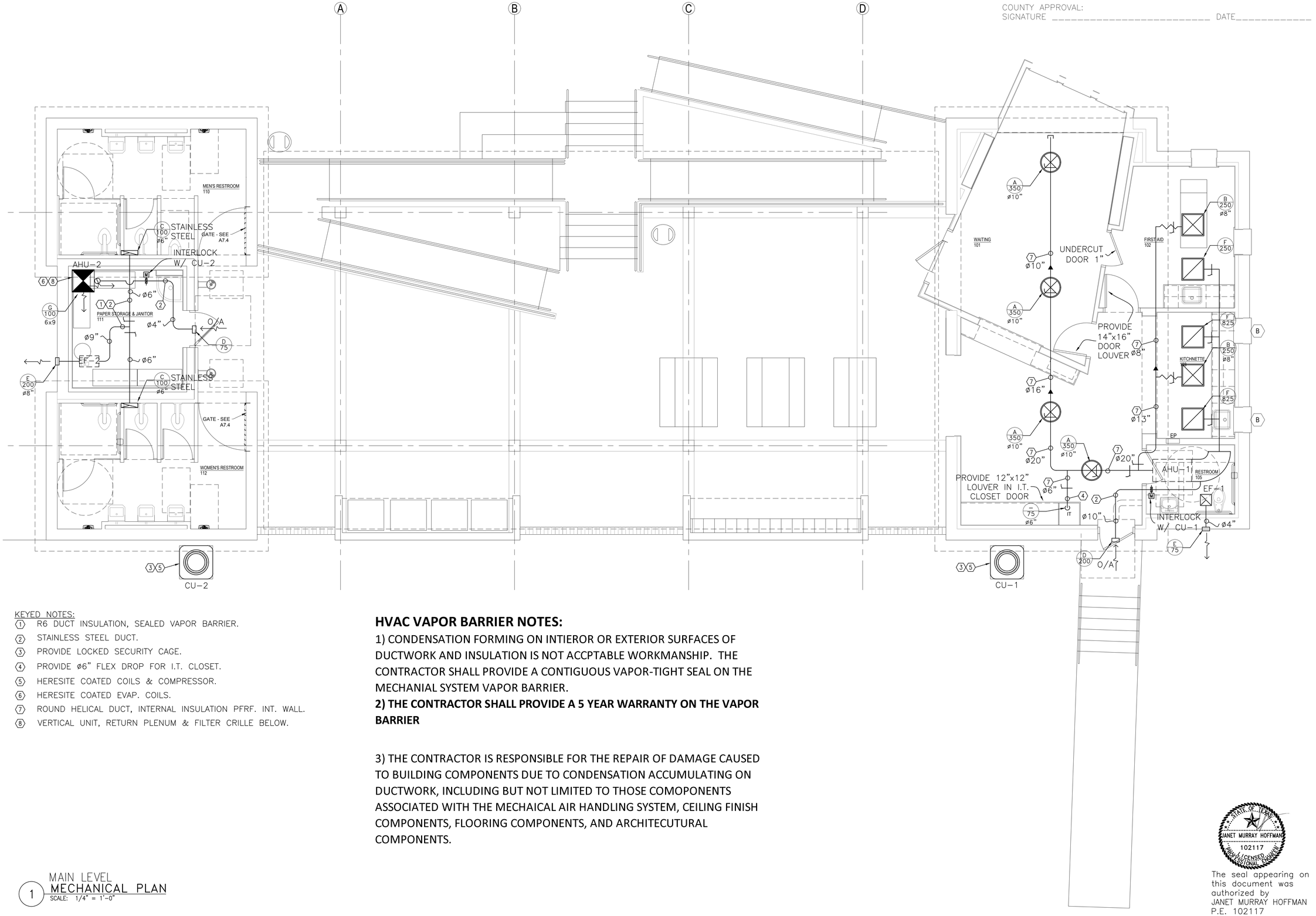

KEYED NOTES:

1. R6 DUCT INSULATION, SEALED VAPOR BARRIER.
2. STAINLESS STEEL DUCT.
3. PROVIDE LOCKED SECURITY CAGE.
4. PROVIDE ø6" FLEX DROP FOR I.T. CLOSET.
5. HERESITE COATED COILS & COMPRESSOR.
6. HERESITE COATED EVAP. COILS.
7. ROUND HELICAL DUCT, INTERNAL INSULATION PFRF. INT. WALL.
8. VERTICAL UNIT, RETURN PLENUM & FILTER CRILLE BELOW.

HVAC VAPOR BARRIER NOTES:

1) CONDENSATION FORMING ON INTIEROR OR EXTERIOR SURFACES OF DUCTWORK AND INSULATION IS NOT ACCPTABLE WORKMANSHIP. THE CONTRACTOR SHALL PROVIDE A CONTIGUOUS VAPOR-TIGHT SEAL ON THE MECHANIAL SYSTEM VAPOR BARRIER.

2) THE CONTRACTOR SHALL PROVIDE A 5 YEAR WARRANTY ON THE VAPOR BARRIER

3) THE CONTRACTOR IS RESPONSIBLE FOR THE REPAIR OF DAMAGE CAUSED TO BUILDING COMPONENTS DUE TO CONDENSATION ACCUMULATING ON DUCTWORK, INCLUDING BUT NOT LIMITED TO THOSE COMOPONENTS ASSOCIATED WITH THE MECHAICAL AIR HANDLING SYSTEM, CEILING FINISH COMPONENTS, FLOORING COMPONENTS, AND ARCHITECUTURAL COMPONENTS.

1 MAIN LEVEL
MECHANICAL PLAN
SCALE: 1/4" = 1'-0"

STATE OF TEXAS
JANET MURRAY HOFFMAN
102117
LICENSED
PROFESSIONAL ENGINEER

The seal appearing on this document was authorized by JANET MURRAY HOFFMAN P.E. 102117 12/7/2017

GALVESTON COUNTY
BEACH PAVILION
CRYSTAL BEACH, TX 77650

BE-Arc LLC Project No : C-13-007.01

bis Engineering
REG # F-11156
P.O. Box 1375
Galveston, Texas 77555
PH 409.621.5740
THIS PRINT IS THE PROPERTY OF BIS ENGINEERING IT MAY NOT BE TRACED OR REPRODUCED IN WHOLE OR IN PART WITHOUT IT BE SUBMITTED WITHOUT PRIOR WRITTEN CONSENT FROM BIS ENGINEERING.

BRAX EASTERWOOD
DESIGN
2728 AVENUE Q SUITE 2
GALVESTON TEXAS 77550
PHONE 409-354-8976
EASTERWOOD@BEAIA.COM

FOR PERMIT

DATE	REVISION

DESIGN DEVELOPMENT

DATE ISSUED:
12/7/2017

COPYRIGHT 2017

M1.0

COUNTY APPROVAL:
SIGNATURE _____ DATE_____

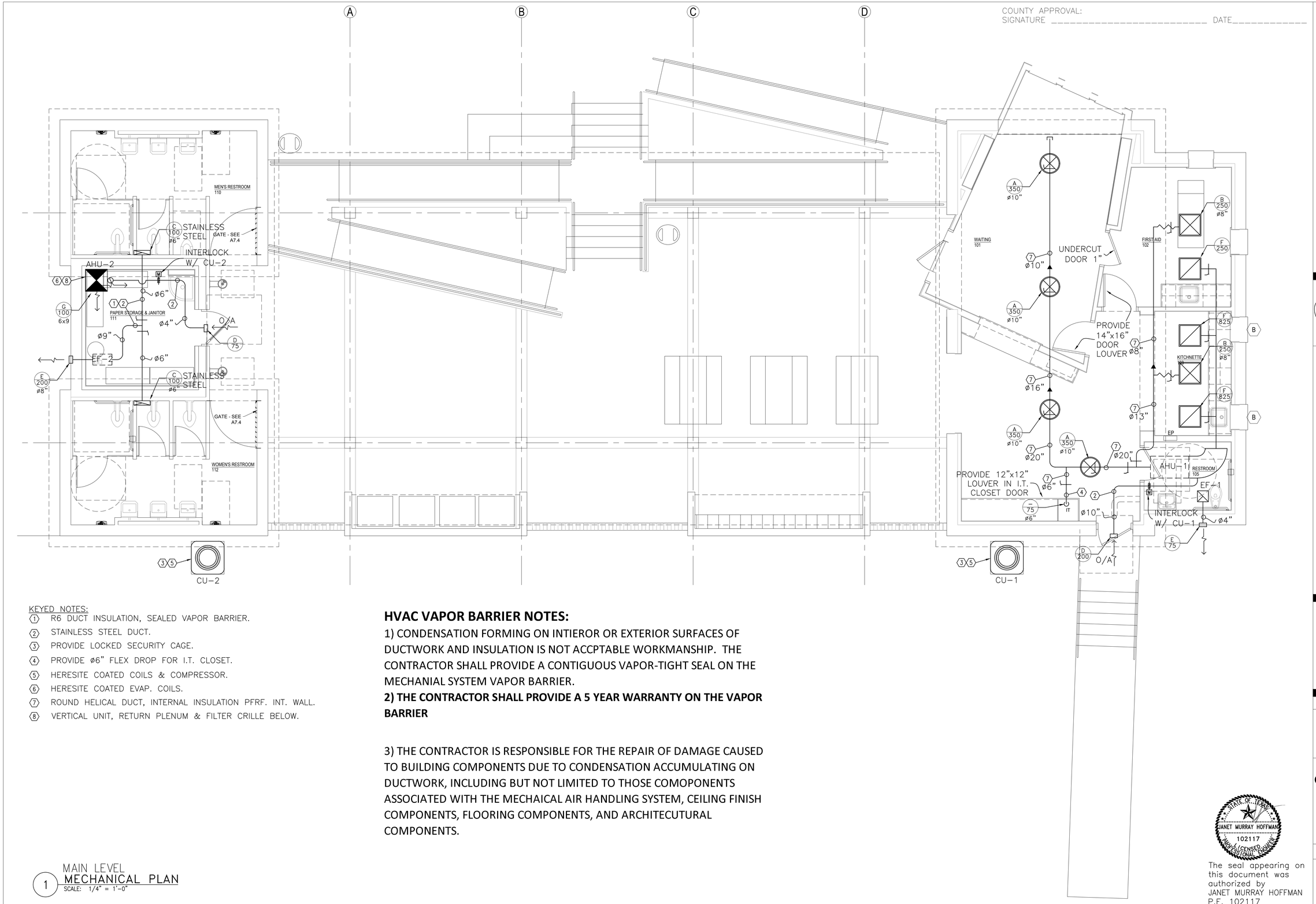

KEYED NOTES:

1. R6 DUCT INSULATION, SEALED VAPOR BARRIER.
2. STAINLESS STEEL DUCT.
3. PROVIDE LOCKED SECURITY CAGE.
4. PROVIDE ø6" FLEX DROP FOR I.T. CLOSET.
5. HERESITE COATED COILS & COMPRESSOR.
6. HERESITE COATED EVAP. COILS.
7. ROUND HELICAL DUCT, INTERNAL INSULATION PFRF. INT. WALL.
8. VERTICAL UNIT, RETURN PLENUM & FILTER CRILLE BELOW.

HVAC VAPOR BARRIER NOTES:

1) CONDENSATION FORMING ON INTIEROR OR EXTERIOR SURFACES OF DUCTWORK AND INSULATION IS NOT ACCPTABLE WORKMANSHIP. THE CONTRACTOR SHALL PROVIDE A CONTIGUOUS VAPOR-TIGHT SEAL ON THE MECHANIAL SYSTEM VAPOR BARRIER.

2) THE CONTRACTOR SHALL PROVIDE A 5 YEAR WARRANTY ON THE VAPOR BARRIER

3) THE CONTRACTOR IS RESPONSIBLE FOR THE REPAIR OF DAMAGE CAUSED TO BUILDING COMPONENTS DUE TO CONDENSATION ACCUMULATING ON DUCTWORK, INCLUDING BUT NOT LIMITED TO THOSE COMOPONENTS ASSOCIATED WITH THE MECHAICAL AIR HANDLING SYSTEM, CEILING FINISH COMPONENTS, FLOORING COMPONENTS, AND ARCHITECUTURAL COMPONENTS.

1 MAIN LEVEL
MECHANICAL PLAN
SCALE: 1/4" = 1'-0"

STATE OF TEXAS
JANET MURRAY HOFFMAN
102117
LICENSED
PROFESSIONAL ENGINEER

The seal appearing on this document was authorized by JANET MURRAY HOFFMAN P.E. 102117 12/7/2017

GALVESTON COUNTY
BEACH PAVILION
CRYSTAL BEACH, TX 77650

BE-Arc LLC Project No : C-13-007.01

bis Engineering
REG # F-11156
P.O. Box 1375
Galveston, TX 77553
PH 409.621.5740
THIS PRINT IS THE PROPERTY OF BIS ENGINEERING IT MAY NOT BE TRACED OR REPRODUCED IN ANY FORM OR MANNER WHATSOEVER, NOR LOANED TO ANY PERSON OR FIRM WITHOUT WRITTEN CONSENT FROM BIS ENGINEERING.

BRAX EASTERWOOD
DESIGN
2728 AVENUE Q SUITE 2
GALVESTON TEXAS 77550
PHONE 409-354-8976
EASTERWOOD@BEAIA.COM

FOR PERMIT

DATE	REVISION

CONSTRUCTION DOCUMENTS

DATE ISSUED:
12/7/2017

COPYRIGHT 2017

M1.0

COUNTY APPROVAL:
SIGNATURE ______________________________ DATE____________

DUCTWORK SYMBOLS LEGEND

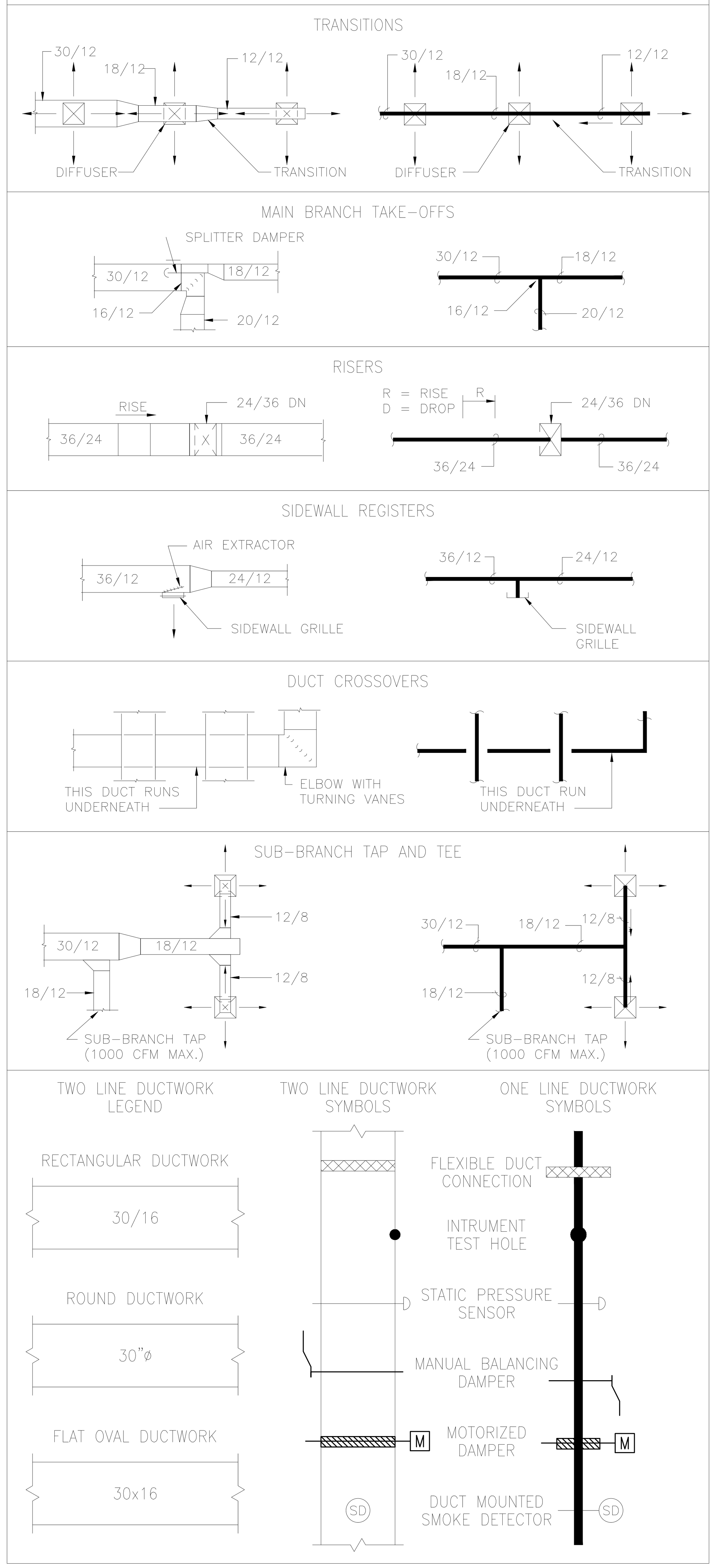

DUCT LINER AND INSULATION

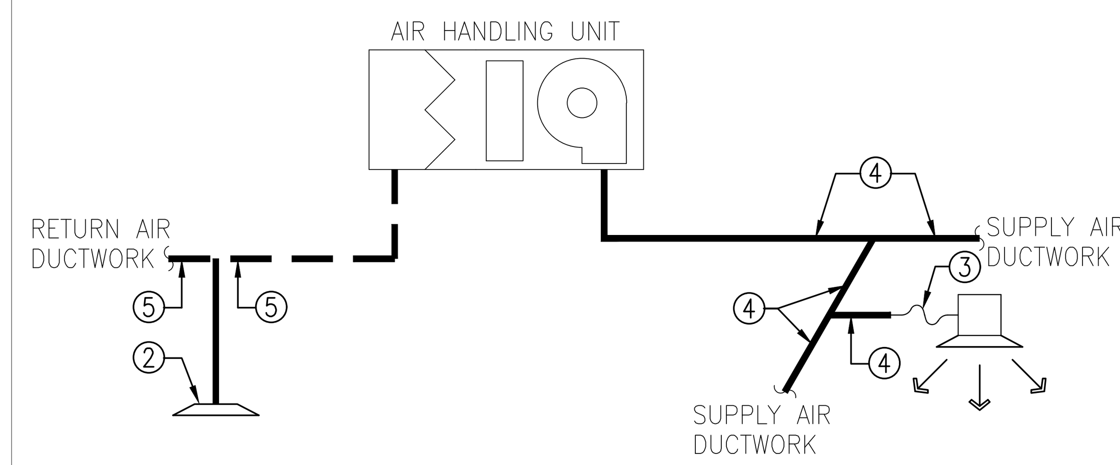

AIR HANDLING UNIT

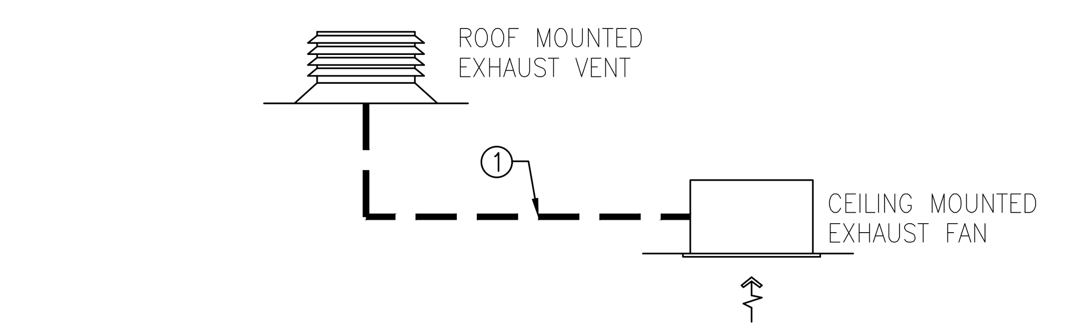

EXHAUST AIR SYSTEMS

NOTES

1. SHEETMETAL DUCTWORK WITH EXTERNAL DUCTWORK INSULATION AS SPECIFIED.
2. EXTERNAL INSULATION (MIN. R-8) ON BACK PAN OF RETURN AIR GRILLE.
3. FLEXIBLE DUCTWORK WITH EXTERNAL DUCTWORK INSULATION.
4. SHEETMETAL DUCTWORK WITH EXTERNAL DUCTWORK INSULATION, (R-8) 1" THICK 1-1/2 LB LINER WITH FOIL REINFORCED KRAFT VPOR BARRIER FACING. REFER TO SPECIFICATIONS.
5. SHEETMETAL DUCTWORK WITH EXTERNAL DUCTWORK INSULATION, (R-8) 1" THICK 1-1/2 LB LINER WITH FOIL REINFORCED KRAFT VPOR BARRIER FACING. REFER TO SPECIFICATIONS.

GRILLE SIZING SCHEDULE

STANDARD GRILLE

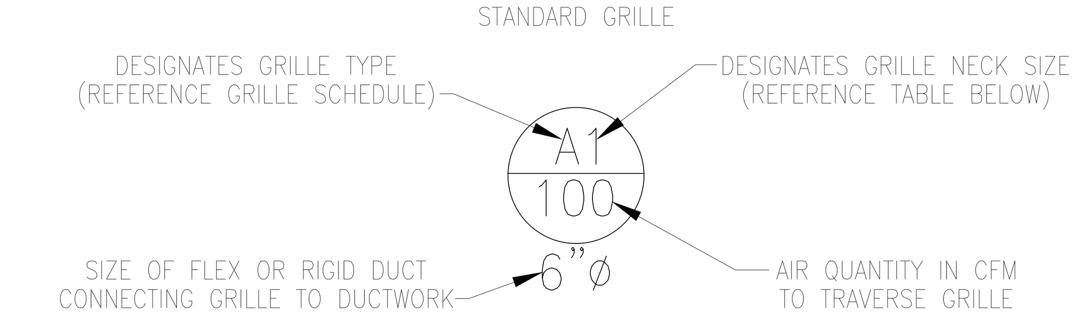

ALL GRILLES SHOWN SHALL BE FOUR-WAY THROW UNLESS OTHERWISE SHOWN.

GRILLE SIZE DESIGNATION	GRILLE NECK SIZE	GRILLE SIZE DESIGNATION	GRILLE NECK SIZE
1	6" x 6"	7	15" x 15"
2	8" x 8"	8	16" x 16"
3	9" x 9"	9	18" x 18"
4	10" x 10"	10	20" x 20"
5	12" x 12"	11	22" x 22"
6	14" x 14"	12	24" x 24"

FANS

MARK	LOCATION	CFM	MAXIMUM RPM	EXT. STATIC PRESSURE (IN. W.C.)	HORSE POWER	CURRENT CHARAC.	LOCALLY SWITCHED BY	INTERLOCKED WITH	FAN TYPE	MANUFACTURER	MODEL NUMBER	REMARKS
EF-1	BATHROOMS	50	–	–	50 W	120/1/60	BATH LIGHT	–	–	GREENHECK	–	–

GENERAL NOTES:
1. EXTERNAL STATIC PRESSURE INCLUDES LOSSES DUE TO DUCTWORK, AIR DEVICES, DAMPERS, AND DUCT MOUNTED HOT WATER COILS WHERE APPLICABLE. DIRTY FILTER AND UNIT CASING MUST BE ADDED TO EXTERNAL STATIC PRESSURE TO OBTAIN TOTAL PRESSURE LOSS. INCREASE HORSEPOWER AS REQUIRED TO MEET YOUR TOTAL PRESSURE LOSS. COORDINATE WITH ELECTRICIAN.
2. MINIMUM RECOMMENDED CLEARANCE AROUND UNIT IS 12 INCHES ON NON-SERVICE SIDES AND 30 INCHES ON SERVICE SIDES. MAINTAIN MINIMUM CLEARANCE AS REQUIRED TO OPEN ACCESS AND CONTROL DOORS ON UNIT FOR SERVICE, MAINTENANCE, AND INSPECTION. MAINTAIN MINIMUM ELECTRICAL CLEARANCE AS REQUIRED BY NEC.
3. FAN SHALL BE CENTRIFUGAL, BELT DRIVEN TYPE UNLESS OTHERWISE SCHEDULED.

REMARKS:
1. CENTRIFUGAL CEILING MOUNTED EXHAUST FAN.
2. PROVIDE WITH BACKDRAFT DAMPER.
3. PROVIDE WITH WHITE FINISH.
4. INTERLOCK WITH ROOFTOP UNIT RTU-2.

GRILLE

MARK	SERVICE	TYPE	DAMPER	CONSTRUCTION MATERIAL	FINISH COLOR	MANUFACTURER	MODEL NUMBER	REMARKS
B	SUPPLY AIR	DIFFUSER	VOLUME	ALUM.	OFF WHITE	TITUS	PAS	24" X 24" MODULE FACE, SQUARE CEILING, ROUND NECK, OBD, INSULATED
F	RETURN AIR	GRILLE	–	ALUM.	OFF WHITE	TITUS	PAR	24" X 24" MODULE, PERFORATED, FILTER
C	SUPPLY AIR	DIFFUSER	VOLUME	ALUM.	OFF WHITE	–	–	WALL INLET LOUVER CORROSION RESISTANT
D	SUPPLY AIR	DIFFUSER	VOLUME	ALUM.	OFF WHITE	–	–	WALL INLET LOUVER W/ BACKDRAFT DAMPER CORROSION RESISTANT
E	EXHAUST	LOUVER	–	ALUM.	OFF WHITE	–	–	WALL EXHAUST LOUVER W/ BACKDRAFT DAMPER CORRISION RESISTANT
A	SUPPLY AIR	DIFFUSER	VOLUME	ALUM.	OFF WHITE	METAL AIRE	3100	CIRCULAR CEILING DIFFUSED, OBD
G	SUPPLY AIR	DIFFUSER	VOLUME	ALUM.	OFF WHITE	H & G	–	WALL DIFFUSED, 1-WAY, OBD

GENERAL NOTES:
1. N/A

REMARKS:
1. N/A

SYMBOL LEGEND

SYMBOL	DESCRIPTION (DISREGARD ITEMS NOT SHOWN ON PLANS)	SYMBOL	DESCRIPTION (DISREGARD ITEMS NOT SHOWN ON PLANS)
GENERAL		SENSORS	
#	KEY NOTE TAG	T	THERMOSTAT AND TEMPERATURE SENSOR
#	NOTE SPECIFIC TO DETAIL TAG	H	HUMIDISTAT
#	REVISION TAG	S	SMOKE DETECTOR
	NEW EQUIPMENT	AIR DEVICES	
DUCTWORK			GRILLE SIZE TAG (REFER TO GRILLE SIZE LEGEND)
	SUPPLY AIR DUCTWORK		SUPPLY AIR GRILLE WITH FOUR-WAY THROW
	RETURN AIR AND OUTSIDE AIR DUCTWORK		RETURN AIR GRILLE WITH SOUND BOOT
	EXHAUST AIR DUCTWORK		EXHAUST AIR GRILLE
	FLEXIBLE DUCTWORK	PIPING	
	SUPPLY AIR DUCTWORK THROUGH HORIZONTAL PARTITION	—D—	CONDENSATE DRAIN LINE
	RETURN AIR AND OUTSIDE AIR DUCTWORK THROUGH HORIZONTAL PARTITION		
	EXHAUST AIR DUCTWORK THROUGH HORIZONTAL PARTITION		
	FIRE DAMPER (VERTICAL)		
	MANUAL BALANCING DAMPER (SEE DAMPER SCHEDULE)		
M	MOTORIZED DAMPER (SEE DAMPER SCHEDULE)		

1. CODES, RULES AND REGULATIONS - DESIGN OF SYSTEM
   A) ALL WORK AND MATERIALS SHALL BE IN FULL ACCORDANCE WITH ALL APPLICABLE FEDERAL, STATE, AND LOCAL LAWS, ORDINANCES AND CODES. 2009 IBC, 2009 IMC, 2008 NEC.
   B) WHEN THE DRAWINGS CALL FOR MATERIALS OR CONSTRUCTION OF A BETTER QUALITY OR LARGER SIZES THAN REQUIRED BY THE ABOVE MENTIONED CODES AND RULES, WORK SHALL BE AS SPECIFIED OR SHOWN RATHER THAN AS REQUIRED BY CODE. ALL ITEMS OR FEATURES OF THE MECHANICAL SYSTEMS REQUIRED BY CODE SHALL BE INCLUDED, EVEN THOUGH NOT SPECIFIED HEREIN.
   C) INSTALLATION OF THE SYSTEMS SHALL BE IN ACCORDANCE WITH THE ABOVE MENTIONED CODES AND REGULATIONS AND ALSO SHALL CONFORM TO GOOD, ACCEPTED MECHANICAL PRACTICES.
2. PROVIDE AND INSTALL VOLUME DAMPERS IN ALL BRANCH DUCTS.
3. FLEXIBLE DUCTS TO BE GLASS-FLEX 6'-0", MAXIMUM IN LENGTH, WHERE APPLICABLE.
4. COORDINATE EXACT LOCATION OF ALL AIR OUTLETS AND INLETS (DIFFUSERS, REGISTERS AND GRILLES) WITH APPROPRIATE ARCHITECTURAL PLAN, AND VERIFY THEIR LOCATION WITH ARCHITECT ON THE JOB SITE BEFORE INSTALLATION. COLOR AS DIRECTED BY OWNER.
5. AUTOMATIC TEMPERATURE CONTROL DEVICE FOR REGULATION OF SPACE TEMPERATURE SHALL BE CAPABLE OF BEING SET FROM 55 TO 85°F, AND HAVE THE ABILITY TO OPERATE THE HEATING AND COOLING IN SEQUENCE. CONTROL SHALL BE ADJUSTABLE TO PROVIDE A RANGE OF UP TO 5°F BETWEEN FULL HEATING AND FULL COOLING AND HAVE CAPABILITY OF TERMINATING ALL HEATING AT A TEMPERATURE NO MORE THAN 70°F, AND COOLING AT A TEMPERATURE NOT LESS THAN 78°F.
6. APPLIANCES DESIGNED TO BE FIXED IN POSITION SHALL BE FASTENED IN PLACE.
7. A MAINTENANCE LABEL SHALL BE AFFIXED TO MECHANICAL EQUIPMENT AND A MAINTENANCE MANUAL SHALL BE PROVIDED FOR THE OWNERS USE.
8. PROVIDE ACCESS PANEL FOR ALL CONCEALED EQUIPMENT AND VOLUME DAMPERS.
9. ALL DUCT SIZES SHOWN ON THE FLOOR PLANS ARE CLEAR INSIDE DIMENSIONS.
10. THE MECHANICAL CONTRACTOR SHALL SECURE AND PAY FOR ALL REQUIRED PERMITS AND FEES.
11. SYSTEM SHALL BE EQUIPPED WITH AN AUTOMATIC SHUT-OFF. THE SMOKE DETECTOR SHALL BE INSTALLED IN THE MAIN SUPPLY AIR DUCT DOWNSTREAM OF THE FILTERS OR THEY MAY BE INSTALLED IN EACH ROOM OR SPACE SERVED BY THE SUPPLY AIR DUCT. DETECTORS SHALL ALSO BE INSTALLED IN THE MAIN RETURN DUCT (IF REQ'D. BY THE LOCAL CODE) AHEAD OF OSA INTAKE. SEE CODE FOR EXEMPTIONS AND LOCAL AUTHORITY FOR CODE INTERPRETATION, OR AS INDICATED ON PLAN.
12. ALL EQUIPMENT AND APPLIANCES ARE LISTED PRODUCTS, AND WILL BE INSTALLED ACCORDING TO THEIR LISTING, AND ALL LISTING INFORMATION WILL BE AVAILABLE FOR INSPECTION.
13. ALL DUCTWORK SHEETMETAL FABRICATION AND INSTALLATION SHALL COMPLY WITH LATEST EDITION OF SMACNA STANDARDS.
14. COORDINATE IN THE FIELD THE EXACT LOCATION OF ALL CEILING MOUNTED GRILLES AND DIFFUSERS WITH LIGHT FIXTURES
15. ALL BRACKETS, CLAMPS, AND HANGERS SHALL BE HOT DIPPED GALVANIZED. COAT ALL CUT ENDS AND WELDS WITH "ZRC" COLD GALVANIZING COMPOUND.
16. REFRIGERANT IS R-410A
17. SIZE REFRIGERANT LINES PER MANUFACTURER'S RECOMMENDATIONS.
18. PROVIDE 1 1/2" INSULATION ON REFRIGERANT LINES.
19. PROVIDE SEVEN (7) DAY PROGRAMMABLE THERMOSTATS.
20. ALL SUPPLY AND RETURN AIR DUCTS AND PLENUMS SHALL BE INSULATED WITH A MINIMUM OF R-8 INSULATION (2").
21. INSULATE CONDENSATE PIPE WITH 1 1/2" UV RESISTANT INSULATION AND WEATHERPROOF TAPE. PROVIDE DRIP LOOPS ON THE EXTERIOR WIRES, CONDUIT, AND LINES TO PREVENT WATER INFILTRATION TO INTERIOR SPACES.
22. SPLITTER OR BALANCING DAMPERS WHERE SHOWN, SHALL BE OF SUFFICIENT GAUGE TO PREVENT BUCKLING OR VIBRATING AND SHALL BE OPERATED BY A QUADRANT DAMPER ADJUSTER WITH LOCKING FEATURES WHICH WILL HOLD DAMPER SECURELY IN POSITION AT DESIRED SETTING.
23. DUCT CONNECTIONS TO EQUIPMENT SHALL BE MADE THROUGH AIRTIGHT CANVAS OR OTHER APPROVED FLEXIBLE CONNECTIONS.
24. PROVIDE CERTIFIED TEST AND BALANCE OF HVAC SYSTEM (AND EXHAUST SYSTEM WHERE APPLICABLE) NO LATER THAN THE DAY C.O. INSPECTION TO TENANT FOR APPROVAL BY LANDLORD. CONTRACTOR MUST USE LANDLORDS DESIGNATED CONTRACTOR FOR THIS.
25. UNLESS SPECIFICALLY NOTED IN THE ARCHITECTURAL OR MECH.. DRAWINGS, ALL DUCTWORK SHALL BE INSTALLED AS HIGH AS POSSIBLE WITHIN THE PREMISES. ALL DUCT WORK EQUIPMENT AND OTHER ACCESSORIES IN PUBLIC OR SALES AREAS SHALL BE CONCEALED.
26. ALL H.V.A.C EQUIPMENT & DUCTS SHALL BE PROVIDED WITH VIBRATION ISOLATORS, SOUND TRAPS, DUCT LINING, ACOUSTICAL HOUSINGS, ACOUSTICAL LOUVERS ETC. AS APPROPRIATE.
27. ALL ROOF CUTS, PATCHING AND REPAIR SHALL BE COORDINATED WITH THE LANDLORD AND PERFORMED BY THE LANDLORDS ROOFING CONTRACTOR AT TENANTS EXPENSE.
28. CONTRACTOR SHALL REPORT ANY DISCREPANCIES FOUND BETWEEN THESE DRAWINGS AND ACTUAL FIELD CONDITIONS TO THE ARCHITECT AND OWNER.
29. CONTRACTOR SHALL BE RESPONSIBLE FOR COORDINATION WITH CEILING INSTALLER FOR PROPER LOCATION OF ACCESS PANELS FOR EASE OF MAINTENANCE INCLUDING CHANGING OF FILTERS.

STATE OF TEXAS
JANET MURRAY HOFFMAN
102117
LICENSED PROFESSIONAL ENGINEER

The seal appearing on this document was authorized by JANET MURRAY HOFFMAN P.E. 102117 12/7/2017

GALVESTON COUNTY
BEACH PAVILION
CRYSTAL BEACH, TX 77650
BE-Arc LLC Project No : C-13-007.01

Ibis Engineering
REG # F-11156
P.O. Box 55171
Galveston, Texas 77555
PH 409.621.6740
THIS PRINT IS THE PROPERTY OF IBIS ENGINEERING IT MUST NOT BE TRACED OR REPRODUCED IN ANY MANNER NOR SHALL IT BE SUBMITTED WITHOUT PRIOR WRITTEN CONSENT FROM IBIS ENGINEERING.

BRAX EASTERWOOD
DESIGN
2728 AVENUE Q SUITE 2
GALVESTON TEXAS 77550
PHONE 409-354-8976
EASTERWOOD@BEAIA.COM

FOR PERMIT

DATE	REVISION

DESIGN DEVELOPMENT

DATE ISSUED:
12/7/2017

COPYRIGHT 2017

M2.0

MECHANICAL SPECIFICATIONS

SINGLE-WALL RECTANGULAR DUCTS AND FITTINGS

A. GENERAL FABRICATION REQUIREMENTS: COMPLY WITH SMACNA'S "HVAC DUCT CONSTRUCTION STANDARDS – METAL AND FLEXIBLE" BASED ON REQUIRED STATIC–PRESSURE CLASS UNLESS OTHERWISE INDICATED.

B. TRANSVERSE JOINTS: SELECT JOINT TYPES AND FABRICATE ACCORDING TO SMACNA'S "HVAC DUCT CONSTRUCTION STANDARDS – METAL AND FLEXIBLE," FIGURE 2–1, "RECTANGULAR DUCT /TRANSVERSE JOINTS," FOR STATIC–PRESSURE CLASS, APPLICABLE SEALING REQUIREMENTS, MATERIALS INVOLVED, DUCT–SUPPORT INTERVALS, AND OTHER PROVISIONS IN SMACNA'S "HVAC DUCT CONSTRUCTION STANDARDS – METAL AND FLEXIBLE."

C. LONGITUDINAL SEAMS: SELECT SEAM TYPES AND FABRICATE ACCORDING TO SMACNA'S "HVAC DUCT CONSTRUCTION STANDARDS – METAL AND FLEXIBLE," FIGURE 2–2, "RECTANGULAR DUCT /LONGITUDINAL SEAMS," FOR STATIC–PRESSURE CLASS, APPLICABLE SEALING REQUIREMENTS, MATERIALS INVOLVED, DUCT–SUPPORT INTERVALS, AND OTHER PROVISIONS IN SMACNA'S "HVAC DUCT CONSTRUCTION STANDARDS – METAL AND FLEXIBLE."

D. ELBOWS, TRANSITIONS, OFFSETS, BRANCH CONNECTIONS, AND OTHER DUCT CONSTRUCTION: SELECT TYPES AND FABRICATE ACCORDING TO SMACNA'S "HVAC DUCT CONSTRUCTION STANDARDS – METAL AND FLEXIBLE," CHAPTER 4, "FITTINGS AND OTHER CONSTRUCTION," FOR STATIC–PRESSURE CLASS, APPLICABLE SEALING REQUIREMENTS, MATERIALS INVOLVED, DUCT –SUPPORT INTERVALS, AND OTHER PROVISIONS IN SMACNA'S "HVAC DUCT CONSTRUCTION STANDARDS – METAL AND FLEXIBLE."

SINGLE-WALL ROUND AND FLAT-QVAL DUCTS AN) FITTINGS

A. GENERAL FABRICATION REQUIREMENTS: COMPLY WITH SMACNA'S "HVAC DUCT CONSTRUCTION STANDARDS – METAL AND FLEXIBLE," CHAPTER 3, "ROUND, OVAL, AND FLEXIBLE DUCT," BASED ON INDICATED STATIC–PRESSURE CLASS UNLESS OTHERWISE INDICATED.

B. FLAT–OVAL DUCTS: INDICATED DIMENSIONS ARE THE DUCT WIDTH (MAJOR DIMENSION) AND DIAMETER OF THE ROUND SIDES CONNECTING THE FLAT PORTIONS OF THE DUCT (MINOR DIMENSION).

C. TRANSVERSE JOINTS: SELECT JOINT TYPES AND FABRICATE ACCORDING TO SMACNA'S "HVAC DUCT CONSTRUCTION STANDARDS – METAL AND FLEXIBLE," FIGURE 3–1, "ROUND DUCT TRANSVERSE JOINTS," FOR STATIC–PRESSURE CLASS, APPLICABLE SEALING REQUIREMENTS, MATERIALS INVOLVED, DUCT–SUPPORT INTERVALS, AND OTHER PROVISIONS IN SMACNA'S "HVAC DUCT CONSTRUCTION STANDARDS – METAL AND FLEXIBLE."

D. LONGITUDINAL SEAMS: SELECT SEAM TYPES AND FABRICATE ACCORDING TO SMACNA'S "HVAC DUCT CONSTRUCTION STANDARDS – METAL AND FLEXIBLE," FIGURE 3–2, "ROUND DUCT LONGITUDINAL SEAMS," FOR STATIC–PRESSURE CLASS, APPLICABLE SEALING REQUIREMENTS, MATERIALS INVOLVED, DUCT–SUPPORT INTERVALS, AND OTHER PROVISIONS IN SMACNA'S "HVAC DUCT CONSTRUCTION STANDARDS – METAL AND FLEXIBLE."

E. TEES AND LATERALS: SELECT TYPES AND FABRICATE ACCORDING TO SMACNA'S "HVAC DUCT CONSTRUCTION STANDARDS – METAL AND FLEXIBLE," FIGURE 3–5, "go DEGREE TEES AND LATERALS," AND FIGURE 3–6, "CONICAL TEES," FOR STATIC–PRESSURE CLASS, APPLICABLE SEALING REQUIREMENTS, MATERIALS INVOLVED, DUCT–SUPPORT INTERVALS, AND OTHER PROVISIONS IN SMACNA'S "HVAC DUCT CONSTRUCTION STANDARDS – METAL AND FLEXIBLE."

SHEET METAL DUCTWORK

A. GENERAL MATERIAL REQUIREMENTS: COMPLY WITH SMACNA'S "HVAC DUCT CONSTRUCTION STANDARDS – METAL AND FLEXIBLE" FOR ACCEPTABLE MATERIALS, MATERIAL THICKNESSES, AND DUCT CONSTRUCTION METHODS UNLESS OTHERWISE INDICATED. SHEET METAL MATERIALS SHALL BE FREE OF PITTING, SEAM MARKS, ROLLER MARKS, STAINS, DISCOLORATIONS, AND OTHER IMPERFECTIONS.

B. GALVANIZED SHEET STEEL: COMPLY WITH ASTM A 653/A 653M.

C. SUPPLY AND RETURN DUCTWORK SHALL BE EXTERNALLY INSULA TED 'MTH EXTERNAL BLANKET INSULATION. DUCTWORK SHALL BE INTERNALLY LINED ONLY WHERE SPECIFICALLY INDICATED.

D. DUCTWORK SHALL BE SEALED AS REQUIRED BY THE AUTHORITIES HAVING JURISDICTION AND AS REQUIRED TO LIMIT LEAKAGE. LEAKAGE IN EXCESS OF 5% SHALL NOT BE ACCEPTABLE.

E. DUCT DIMENSIONS ARE INSIDE CLEAR DIMENSIONS.

F. THE INTERIOR SURFACE OF ALL DUCTWORK SHALL BE SMOOTH WITH NO SHEETMETAL OR OTHER PARTS PROJECTING INTO THE AIR STREAM. ALL SEAMS AND JOINTS SHALL BE EXTERNAL. THE INSIDE OF ALL DUCTWORK SHALL BE THOROUGHLY CLEANED AND ALL FANS OPERATED TO REMOVE ANY DEBRIS PRIOR TO CONNECTION OF AIR DISTRIBUTION DEVICES.

G. ALL DUCTWORK DIMENSIONS ON THE DRAWINGS ARE CLEAR INSIDE

H. INSTALL ALL DUCTWORK TIGHT TO STRUCTURE UNLESS OTHERWISE NOTED. THE MECHANICAL CONTRACTOR SHALL COORDINATE WITH ALL OTHER TRADES PRIOR TO THE CONSTRUCTION OR INSTALLATION OF DUCTWORK.

I. ALL TRANSVERSE JOINTS SHALL BE SEALED WITH A WATER BASE ADHESIVE SEALER DESIGNED FOR USE IN MEDIUM VELOCITY DUCT SYSTEMS. SEALER SHALL BE EFFECTIVE AGAINST BOTH NEGATIVE AND POSITIVE PRESSURE LOSSES. SEALER SHALL HAVE A FLAME SPREAD RATING OF 25 OR LESS AND A SMOKE DEVELOPED RATING OF 50 OR LESS. APPLY UN–THINNED WITH BRUSH, TROWEL OR CAULKING GUN AS PER THE MANUFACTURER'S RECOMMENDATIONS AND ALLOW TO DRY FOR A MINIMUM OF 48 HOURS BEFORE AIR IS APPLIED TO THE SYSTEM. SEALER SHALL BE "IRON GRIP WATER BASE DUCT SEALANT #601" AS MANUFACTURED BY HARDCAST, INC., UNI–GRIP AS MANUFACTURED BY UNITED MCGILL, OR AN APPROVED EQUAL.

J. ALL ROUND TAKE–OFFS SHALL BE MADE WITH A DAMPER EXTRACTOR SPIN–IN COLLAR. SPIN–INS SHALL BE INSTALLED WITH THEIR DAMPER AXIS PARALLEL TO AIR FLOW.

K. ALL DUCTWORK SUPPORTS SHALL BE PER TABLE 5–1 OF THE SMACNA MANUAL WITH ALL SUPPORTS DIRECTLY ANCHORED TO THE BUILDING STRUCTURE. SUPPORTS SHALL BE ON MAXIMUM 8'–0" CENTERS WITH ADDITIONAL SUPPORTS AS REQUIRED TO PREVENT SAGGING.

L. FLEXIBLE DUCT FABRIC CONNECTIONS SHALL BE INSTALLED ON THE INLET AND OUTLET CONNECTIONS TO ALL POWERED AIR MOVING EQUIPMENT WHICH IS NOT CONNECTED WITH FLEXIBLE DUCT. A MINIMUM OF 1" OF SLACK SHALL BE ALLOWED IN ALL FLEXIBLE CONNECTIONS TO INSURE VIBRATION ISOLATION. FLEXIBLE FABRIC SHALL BE A MINIMUM OF 3 INCHES WIDE WITH "GRIP–LOC" SEAM TO 24 GAUGE GALVANIZED METAL SIDE CONNECTORS A MINIMUM OF 3 INCHES WIDE EACH. FLEXIBLE CONNECTION ARE TO FABRICATED WITH ELGEN "ZIPPERLOCK" #ZLN–4 NEOPRENE COATED 30 OZ. FIBERGLASS WITH 24 GAUGE GALVANIZED IRON SIDE CONNECTORS, OR DURO DYNE EXCELON "METAL–FAB" VINYL COATED 22 OZ. NYLON WITH 24 GAUGE GALVANIZED IRON SIDE CONNECTORS OR "APPROVED EQUAL".

M. INSTALL MANUAL SPLITTER DAMPERS IN BRANCH TAKE–OFFS WHERE SHOWN. SPLITTER DAMPERS SHALL BE MINIMUM 16 GAUGE GALVANIZED SHEET METAL AND SHALL BE 3/4 OF THE WIDTH OF THE SMALLEST TAKE–OFF BUT NO LESS THAN 6" LONG. DAMPERS SHALL HAVE 1/8" OF CLEARANCE TO THE DUCT IN WHICH THEY ARE INSTALLED. SPLITTER DAMPERS SHALL BE CONTROLLED BY ONE OR MORE CONTROL RODS IN ACCORDANCE WITH FIG. 2–5 OF THE SMACNA MANUAL. WHERE SPLITTERS ARE IN CONCEALED INACCESSIBLE LOCATIONS, SUBMIT PROPOSED CONTROL ROD DETAILS FOR APPROVAL.

N. DUCTWORK WHICH IS EXPOSED TO WEATHER SHALL HAVE SOLDERED JOINTS AND SEAMS AND SHALL BE PAINTED WITH A SUITABLE EPOXY COATING.

FLEXIBLE DUCIWORK

A. FLEXIBLE DUCT SHALL BE USED FOR CONNECTIONS TO AIR DISTRIBUTION DEVICES WHERE SHOWN ON THE DRA'MNGS OR SPECIFIED HEREIN. MAXIMUM LENGTH SHALL BE 8'–0" FOR AIR DISTRIBUTION DEVICE CONNECTIONS. WHERE LONGER RUNS ARE REQUIRED, PROVIDE RIGID DUCTWORK.

B. INSULATED FLEXIBLE DUCT SHALL BE A FACTORY FABRICATED ASSEMBLY CONSISTING OF A GALVANIZED STEEL OR SPIRAL ALUMINUM HELIX. STAINLESS INNER LINER SHALL BE COMPOSED OF 3–PLY ALUMINUM FOIL OR HEAVILY COATED FIBERGLASS WITH A MAXIMUM THERMAL CONDUCTANCE OF .23 BTU/HR/SF /'F. THE ASSEMBLY SHALL BE SHEATHED IN A REINFORCED METALIZED VAPOR BARRIER OUTER JACKET.

C. THE FLEXIBLE DUCT ASSEMBLY SHALL BE SUITABLE FOR A MINIMUM OF 6" W.C. WORKING PRESSURE AND SHALL BE LISTED CLASS I BY THE UNDERWRITERS LABORATORY AT A FLAME SPREAD OF NOT OVER 25 AND A SMOKE DEVELOPED RATE OF NOT OVER 50. DUCTS SHALL ALSO COMPLY WITH NFPA STANDARD 90A.

D. FLEXIBLE DUCTS SHALL BE SUPPORTED IN SUCH A MANNER TO PREVENT SAGS AND KINKS. BENDS IN ANY LENGTH OF FLEXIBLE DUCT SHALL NOT EXCEED 90' FOR AIR DISTRIBUTION DEVICE CONNECTIONS.

E. ALL JOINTS AND CONNECTIONS SHALL BE MADE WITH 1/2'' WIDE STAINLESS STEEL DUCT CLAMPS OR 100% NYLON SELF–LOCKING CLAMPS MANUFACTURED BY PANDUIT CORPORATION OR AN APPROVED EQUAL.

F. IF IT COMPLIES WITH THESE SPECIFICATIONS, FLEXIBLE DUCTWORK OF THE FOLLOWING TYPES WILL BE ACCEPTABLE:

FLEXMASTER TYPE 8M OR APPROVED EQUAL (EQUIVALENT TO R6).

CONTROLS

PROVIDE ALL TEMPERATURE CONTROLS MODIFICATIONS REQUIRED FOR A COMPLETE AND FUNCTIONING CONTROLS SYSTEM. ALL CONTROLS SHALL MATCH BUILDING STANDARD.

CHILLED WATER/ CONDENSATE PIPING

A. CONDENSATE–DRAIN PIPING: TYPE M (C) DRAWN–TEMPER COPPER TUBING, WROUGHT –COPPER FITTINGS, AND SOLDERED JOINTS.

B. CONDENSATE AND EQUIPMENT DRAIN WATER BELOW 60 DEG F (16 DEG C):

1. ALL PIPE SIZES: INSULATION SHALL BE ONE OF THE FOLLOWING: MINERAL–FIBER, PREFORMED PIPE INSULATION, TYPE 1: 1 INCH (25 MM) THICK.

DUCT LINER

A. FIBROUS–GLASS DUCT LINER: COMPLY WITH ASTM C 1071, NFPA 90A, OR NFPA 90B; AND WITH NAIMA AH124, "FIBROUS GLASS DUCT LINER STANDARD."

B. MAXIMUM THERMAL CONDUCTIVITY: TYPE I, FLEXIBLE: 0.27 BTU X IN./H X SQ. FT. X DEG F (0.039 W/M X K) AT 75 DEG F (24 DEG C) MEAN TEMPERATURE. R6 EQUIVALENT. TYPE II, RIGID: 0.23 BTU X IN./H X SQ. FT. X DEG F (0.033 W/M X K) – R6 EQUIVALENT. ANTIMICROBIAL EROSION–RESISTANT COATING: APPLY TO THE SURFACE OF THE LINER THAT WILL FORM THE INTERIOR SURFACE OF THE DUCT TO ACT AS A MOISTURE REPELLENT AND EROSION–RESISTANT COATING. ANTIMICROBIAL COMPOUND SHALL BE TESTED FOR EFFICACY BY AN NRTL AND REGISTERED BY THE EPA FOR USE IN HVAC SYSTEMS. WATER–BASED LINER ADHESIVE: COMPLY WITH NFPA 9DA OR NFPA 9DB AND WITH ASTM C 916. FOR INDOOR APPLICATIONS, USE ADHESIVE THAT HAS A VOC CONTENT OF 80 G/L OR LESS WHEN CALCULATED ACCORDING TO 40 CFR 59, SUBPART D (EPA METHOD 24).

C. SHOP APPLICATION OF DUCT LINER: COMPLY WITH SMACNA'S "HVAC DUCT CONSTRUCTION STANDARDS – METAL AND FLEXIBLE," FIGURE 7–11, "FLEXIBLE DUCT LINER INSTALLATION." ADHERE A SINGLE LAYER OF INDICA TED THICKNESS OF DUCT LINER WITH 100 PERCENT ADHESIVE COVERAGE AT LINER CONTACT SURFACE AREA. ATTAINING INDICATED THICKNESS WITH MULTIPLE LAYERS OF DUCT LINER IS PROHIBITED.

DUCT INSULATION

A. MINERAL–FIBER BLANKET INSULATION: MINERAL OR GLASS FIBERS BONDED WITH A THERMOSETTING RESIN. COMPLY WITH ASTM C 553, TYPE II AND ASTIM C 1290, TYPE III WITH FACTORY–APPLIED FSK JACKET. EQUIVALENT TO R–6. PRODUCTS: SUBJECT TO COMPLIANCE WITH REQUIREMENTS, PROVIDE ONE OF THE FOLLOWING:

1. CERTAINTEED CORP.; SOFTTOUCH DUCT WRAP.
2. JOHNS MANVILLE; MICROLITE.
3. KNAUF INSULATION; FRIENDLY FEEL DUCT WRAP.
4. MANSON INSULATION INC.; ALLEY WRAP.
5. OWENS CORNING; SOFTR ALL–SERVICE DUCT WRAP.

B. MINERAL –FIBER ADHESIVE: COMPLY WITH MIL –A–3316C, CLASS 2, GRADE A. PRODUCTS: SUBJECT TO COMPLIANCE WITH REQUIREMENTS, PROVIDE ONE OF THE FOLLOWING:

1. CHILDERS BRAND, SPECIALTY CONSTRUCTION BRANDS, INC., A BUSINESS OF H. B. FULLER COMPANY; CP–127.
2. EAGLE BRIDGES – MARATHON INDUSTRIES; 225.
3. FOSTER BRAND, SPECIALTY CONSTRUCTION BRANDS, INC., A BUSINESS OF H. B. FULLER COMPANY; 85–60/85–70.
4. MON–ECO INDUSTRIES, INC.; 22–25.

FOR INDOOR APPLICATIONS, USE ADHESIVE THAT HAS A VOC CONTENT OF 80 G/L OR LESS WHEN CALCULATED ACCORDING TO 40 CFR 59, SUBPART D (EPA METHOD 24).

CASJ ADHESIVE, AND FSK JACKET ADHESIVE: COMPLY WITH MIL–A–3316C, CLASS 2, GRADE A FOR BONDING INSULATION JACKET LAP SEAMS AND JOINTS. PRODUCTS: SUBJECT TO COMPLIANCE WITH REQUIREMENTS, PROVIDE ONE OF THE FOLLOWING:

1. CHILDERS BRAND, SPECIALTY CONSTRUCTION BRANDS, INC., A BUSINESS OF H. B. FULLER COMPANY; CP–82.
2. EAGLE BRIDGES – MARATHON INDUSTRIES; 225.
3. FOSTER BRAND, SPECIALTY CONSTRUCTION BRANDS, INC., A BUSINESS OF H. B. FULLER COMPANY; 85–50.
4. MON–ECO INDUSTRIES, INC.; 22–25.

FOR INDOOR APPLICATIONS, USE ADHESIVE THAT HAS A VOC CONTENT OF 50 G/L OR LESS WHEN CALCULATED ACCORDING TO 40 CFR 59, SUBPART D (EPA METHOD 24).

DMASTICS

MATERIALS SHALL BE COMPATIBLE WITH INSULATION MATERIALS, JACKETS, AND SUBSTRATES; COMPLY WITH MIL–PRF–19565C, TYPE II.

1. FOR INDOOR APPLICATIONS, USE MASTICS THAT HAVE A VOC CONTENT OF 50 G/L OR LESS WHEN CALCULATED ACCORDING TO 40 CFR 59, SUBPART D (EPA METHOD 24).

EVAPOR–BARRIER MASTIC: WATER BASED; SUITABLE FOR INDOOR USE ON BELOW AMBIENT SERVICES. PRODUCTS: SUBJECT TO COMPLIANCE WITH REQUIREMENTS, PROVIDE ONE OF THE FOLLOWING:

1. FOSTER BRAND, SPECIALTY CONSTRUCTION BRANDS, INC., A BUSINESS OF H. B. FULLER COMPANY; 30–80/30–90.
2. VIMASCO CORPORATION; 7 49.

WATER–VAPOR PERMANENT: ASTM E 96/E 96M, PROCEDURE B, 0.013 PERM (0.009 METRIC PERM) AT 43–MIL (1.09–MM) DRY FILM THICKNESS. SERVICE TEMPERATURE RANGE: MINUS 20 TO PLUS 180 DEG F (MINUS 29 TO PLUS 82 DEG C). SOLIDS CONTENT: ASTM D 1644, 58 PERCENT BY VOLUME AND 70 PERCENT BY WEIGHT. COLOR: WHITE.

F SEALANTS

FSX AND METAL JACKET FLASHING SEALANTS: PRODUCTS: SUBJECT TO COMPLIANCE WITH REQUIREMENTS, PROVIDE ONE OF THE FOLLOWING:

1. CHILDERS BRAND, SPECIALTY CONSTRUCTION BRANDS, INC., A BUSINESS OF H. B. FULLER COMPANY; CP–76.
2. EAGLE BRIDGES – MARATHON INDUSTRIES; 405.
3. FOSTER BRAND, SPECIALTY CONSTRUCTION BRANDS, INC., A BUSINESS OF H. B. FULLER COMPANY; 95–44.
4. MON–ECO INDUSTRIES, INC.; 44–05. MATERIALS SHALL BE COMPATIBLE WITH INSULATION MATERIALS, JACKETS, AND SUBSTRATES. FIRE– AND WATER–RESISTANT, FLEXIBLE, ELASTOMERIC SEALANT. SERVICE TEMPERATURE RANGE: MINUS 40 TO PLUS 250 DEG F (MINUS 40 TO PLUS 121 DEG C).

COLOR: ALUMINUM.

FOR INDOOR APPLICATIONS, USE SEALANTS THAT HAVE A VOC CONTENT OF 420 G/L OR LESS WHEN CALCULATED ACCORDING TO 40 CFR 59, SUBPART D (EPA METHOD 24).

GFSK TAPE: FOIL–FACE, VAPOR–RETARDER TAPE MATCHING FACTORY–APPLIED JACKET WITH

ACRYLIC ADHESIVE; COMPLYING WITH ASTIM C 1136. PRODUCTS: SUBJECT TO COMPLIANCE WITH REQUIREMENTS, PROVIDE ONE OF THE FOLLOWING:

1. ABI, IDEAL TAPE DIVISION; 491 AWF FSK.
2. AVERY DENNISON CORPORATION, SPECIALTY TAPES DIVISION; FASSON 0827.
3. COMPAC CORPORATION; 110 AND 111.
4. VENTURE TAPE; 1525 CW NT, 1528 CW, AND 1528 CW/SQ.

WIDTH: 3 INCHES (75 MM).

THICKNESS: 6.5 MILS (0.16 MM).

ADHESION: 90 OUNCES FORCE/INCH (1.0 N/MM) IN WIDTH.

ELONGATION: 2 PERCENT.

TENSILE STRENGTH: 40 LBF /INCH (7.2 N/MM) IN WIDTH.

FSK TAPE DISKS AND SQUARES: PRECUT DISKS OR SQUARES OF FSK TAPE.

I. 1–SECUREMENTS

BANDS:

PRODUCTS: SUBJECT TO COMPLIANCE WITH REQUIREMENTS, PROVIDE ONE OF THE FOLLOWING:

1. ITW INSULATION SYSTEMS; GERRARD STRAPPING AND SEALS.
2. RPR PRODUCTS, INC.; INSUL–MATE STRAPPING, SEALS, AND SPRINGS. ALUMINUM: ASTM B 209 (ASTIM B 209M), ALLOY 3003, 3005, 3105, OR 5005; TEMPER H–14, 0.020 INCH (0.51 MM) THICK, 1/2 INCH (13 MM) WIDE WITH WING SEAL OR CLOSED SEAL.

COUNTY APPROVAL:
SIGNATURE ____________________________ DATE_____________

I. INSULATION PINS AND HANGERS:

CAPACITOR–DISCHARGE–WELD PINS: COPPER– OR ZINC–COATED STEEL PIN, FULLY ANNEALED FOR CAPACITOR–DISCHARGE WELDING, 0.106–INCH– (2.6–MM–) DIAMETER SHANK, LENGTH TO SUIT DEPTH OF INSULATION INDICATED. PRODUCTS: SUBJECT TO COMPLIANCE WITH REQUIREMENTS, PROVIDE ONE OF THE FOLLOWING:

1. AGM INDUSTRIES, INC.; CWP–1.
2. GEMCO; CD.
3. MIDWEST FASTENERS, INC.; CD.
4. NELSON STUD WELDING; TPA, TPC, AND TPS.

JINSTALLATION OF MINERAL–FIBER INSULATION:

BLANKET INSULATION INSTALLATION ON DUCTS AND PLENUMS: SECURE 'MTH ADHESIVE AND INSULATION PINS. APPLY ADHESIVES ACCORDING TO MANUFACTURER'S RECOMMENDED COVERAGE RATES PER UNIT AREA, FOR 100 PERCENT COVERAGE OF DUCT AND PLENUM SURFACES. APPLY ADHESIVE TO ENTIRE CIRCUMFERENCE OF DUCTS AND TO ALL SURFACES OF FITTINGS AND TRANSITIONS. INSTALL EITHER CAPACITOR–DISCHARGE–WELD PINS AND SPEED WASHERS OR CUPPED–HEAD, CAPACITOR–DISCHARGE–WELD PINS ON SIDES AND BOTTOM OF HORIZONTAL DUCTS AND SIDES OF VERTICAL DUCTS AS FOLLOWS:

1. ON DUCT SIDES WITH DIMENSIONS 18 INCHES (450 MM) AND SMALLER, PLACE PINS ALONG LONGITUDINAL CENTERLINE OF DUCT. SPACE 3 INCHES (75 MM) MAXIMUM FROM INSULATION END JOINTS, AND 16 INCHES (400 MM) O.C.
2. ON DUCT SIDES 'MTH DIMENSIONS LARGER THAN 18 INCHES (450 MM), PLACE PINS 16 INCHES (400 MM) D.C. EACH WAY, AND 3 INCHES (75 MM) MAXIMUM FROM INSULATION JOINTS. INSTALL ADDITIONAL PINS TO HOLD INSULATION TIGHTLY AGAINST SURFACE AT CROSS BRACING.
3. PINS MAY BE OMITTED FROM TOP SURFACE OF HORIZONTAL, RECTANGULAR DUCTS AND PLENUMS.
4. DO NOT OVERCOMPRESS INSULATION DURING INSTALLATION.
5. IMPALE INSULATION OVER PINS AND ATTACH SPEED WASHERS.
6. CUT EXCESS PORTION OF PINS EXTENDING BEYOND SPEED WASHERS OR BEND PARALLEL WITH INSULATION SURFACE. COVER EXPOSED PINS AND WASHERS WITH TAPE MATCHING INSULATION FACING.

FOR DUCTS AND PLENUMS WITH SURFACE TEMPERATURES BELOW AMBIENT, INSTALL A CONTINUOUS UNBROKEN VAPOR BARRIER. CREATE A FACING LAP FOR LONGITUDINAL SEAMS AND END JOINTS WITH INSULATION BY REMOVING 2 INCHES (50 MM) FROM ONE EDGE AND ONE END OF INSULATION SEGMENT. SECURE LAPS TO ADJACENT INSULATION SECTION WITH 1/2–INCH (13–MM) OUTWARD–CLINCHING STAPLES, 1 INCH (25 MM) D.C. INSTALL VAPOR BARRIER CONSISTING OF FACTORY– OR FIELD–APPLIED JACKET, ADHESIVE, VAPOR–BARRIER MASTIC, AND SEALANT AT JOINTS, SEAMS, AND PROTRUSIONS.

1. REPAIR PUNCTURES, TEARS, AND PENETRATIONS WITH TAPE OR MASTIC TO MAINTAIN VAPOR–BARRIER SEAL.
2. INSTALL VAPOR STOPS FOR DUCTWORK AND PLENUMS OPERATING BELOW 50 DEG F (1 DEG C) AT 18–FOOT (5.5–M) INTERVALS. VAPOR STOPS SHALL CONSIST OF VAPOR–BARRIER MASTIC APPLIED IN A Z–SHAPED PATTERN OVER INSULATION FACE, ALONG BUTT END OF INSULATION, AND OVER THE SURFACE. COVER INSULATION FACE AND SURFACE TO BE INSULATED A WIDTH EQUAL TO TWO TIMES THE INSULATION THICKNESS, BUT NOT LESS THAN 3 INCHES (75 MM).

OVERLAP UNFACED BLANKETS A MINIMUM OF 2 INCHES (50 MM) ON LONGITUDINAL SEAMS END JOINTS. AT END JOINTS, SECURE WITH STEEL BANDS SPACED A MAXIMUM OF 18 INCHES (450 MM) O.C. INSTALL INSULATION ON RECTANGULAR DUCT ELBOWS AND TRANSITIONS WITH A FULL INSULATION SECTION FOR EACH SURFACE. INSTALL INSULATION ON ROUND AND FLAT–OVAL DUCT ELBOWS WITH INDIVIDUALLY MITERED GORES CUT TO FIT THE ELBOW. INSULATE DUCT STIFFENERS, HANGERS, AND FLANGES THAT PROTRUDE BEYOND INSULATION SURFACE WITH 6–INCH– (150–MM–) WIDE STRIPS OF SAME MATERIAL USED TO INSULATE DUCT. SECURE ON ALTERNATING SIDES OF STIFFENER, HANGER, AND FLANGE WITH PINS SPACED 6 INCHES (150 MM) D.C.

STATE OF TEXAS
JANET MURRAY HOFFMAN
102117
LICENSED PROFESSIONAL ENGINEER

The seal appearing on this document was authorized by
JANET MURRAY HOFFMAN
P.E. 102117
12/7/2017

GALVESTON COUNTY
BEACH PAVILION
CRYSTAL BEACH, TX 77650

BE–Arc LLC Project No : C–13–007.01

Ibis Engineering
REG # F-11156
P.O. Box 55171
Galveston, Texas 77555
PH 409.621.6740

THIS PRINT IS THE PROPERTY OF IBIS ENGINEERING IT MUST NOT BE TRACED OR REPRODUCED IN ANY MANNER NOR SHALL IT BE SUBMITTED WITHOUT PRIOR WRITTEN CONSENT FROM IBIS ENGINEERING.

B R A X E A S T E R W O O D
D E S I G N
2728 AVENUE Q SUITE 2
GALVESTON TEXAS 77550
PHONE 409–354–8976
EASTERWOOD@BEAIA.COM

FOR PERMIT

DATE	REVISION

DESIGN DEVELOPMENT

DATE ISSUED:
12/7/2017

COPYRIGHT 2017

M3.0

COUNTY APPROVAL:
SIGNATURE _____ DATE_____

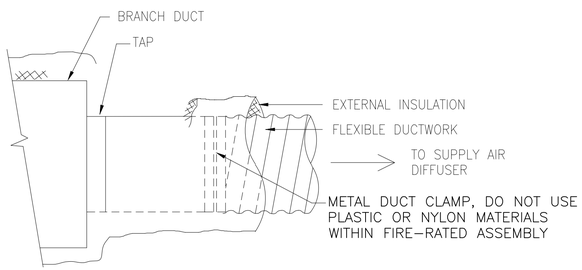

FLEXIBLE DUCT TAP
SCALE: NONE

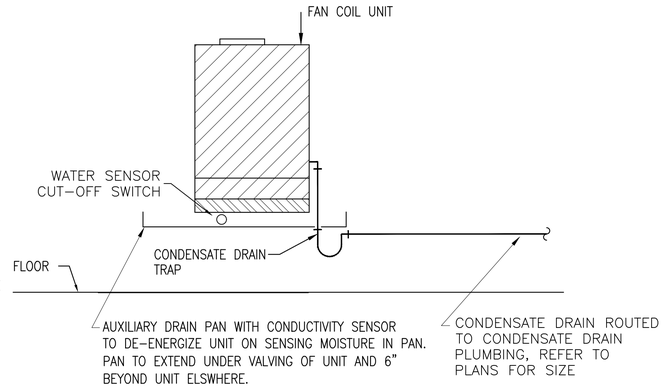

CONDENSATE DRAIN
SCALE: NONE

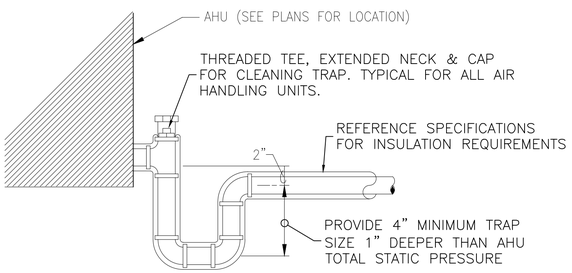

5 CONDENSATE DRAIN PIPING AT FCU
SCALE: NONE

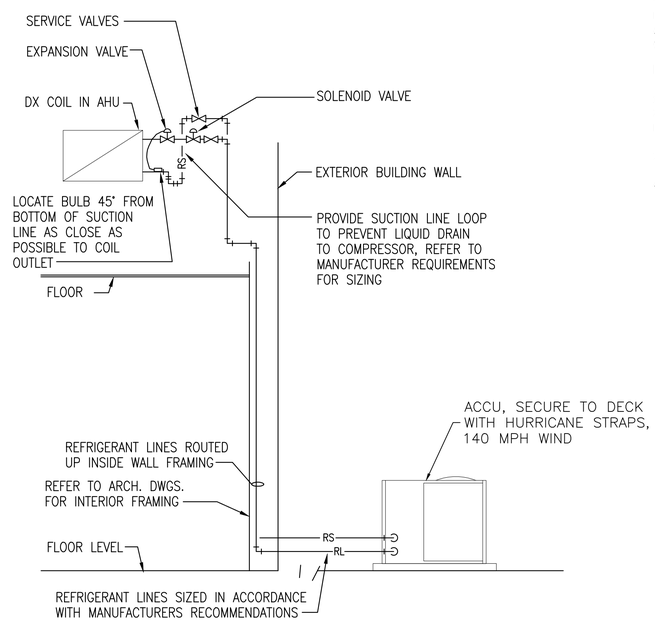

REFRIGERANT PIPING DETAIL
SCALE: NONE

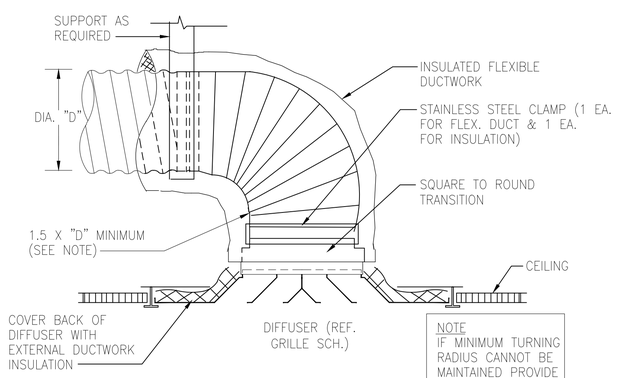

1 FLEX DUCT DETAIL
Scale: N.T.S.

SCHEDULE OF EXHAUST FANS

UNIT DESIGNATION		EF-1	EF-2
LOCATION		CEILING	CEILING
SERVICE		OFFICE BATH.	PUBLIC BATH
FAN TYPE		CENTRIFUGAL	CENTRIFUGAL
DRIVE TYPE		DIRECT	DIRECT
AIR VOLUME CFM		94	300
EXT. STATIC PRESSURE- IN W. G.		0.5	0.5
FAN RPM		950	1,350
MOTOR HP.		80W	144 W
	VOLTS	120	120
	PHASE	1	1
	HZ	60	60
CONTROL SEQUENCE TYPE			
ACCESSORIES *		BD	BD
MANUFACTURER / SERIES BASIS FOR DESIGN		GREENHECK SP-B110	GREENHECK CSP-A390
REMARKS / NOTES			

* BS - BIRDSCREEN; BD - BACKDRAFT DAMPER; MBO - MOTORIZED BACKDRAFT DAMPER; SC - SOUND ATTENUATING CURB; SI - INLET SCREEN; WH - WEATHERPROOF MOTOR HEAD: WC - WALL COLLAR;

NOTES

1. FAN TO BE CONTROLLED BY TIME CLOCK.
2. PROVIDE WITH FACTORY FURNISHED, UNIT MOUNTED DISCONNECT SWITCH.

3. INTERLOCK WITH AHU-1

4. PROVIDE GREASE BOX

SCHEDULE OF SPLIT SYSTEMS W/ ELECTRIC HEAT

UNIT DESIGNATION		AHU - 1	CU-1	AHU-2	CU-2
SERVICE		Office		Store Room	
LOCATION		CEILING HUNG	OUTSIDE	FLOOR MOUNT	OUTSIDE
ROOM DESIGN TEMPERATURE F° D. B.		78/ 55% RH		78/55% RH	
	TOTAL AIR VOLUME /CFM	2000		300	
	OUTSIDE AIR VOLUME / CFM (SUMMER &WINTER)	200		75	
	FAN TYPE	BELT		BELT	
	FAN SPEED MAXIMUM R. P. M.	965		965	
	EXT. STATIC PRESS. INCL. FILTERS IN W.G.***	1.0		1.0	
	MAXIMUM FAN MOTOR H. P.	1		0.5	
	TOTAL AIR VOLUME /CFM	2000		300	
	ENTERING AIR TEMP. F° - D. B. / W. B.	82.4/73.8		82.6/74	
	LEAVING AIR TEMP. F° - D. B. / W. B.	54.7/52.7		54.7/52.7	
	TOTAL SENSIBLE HEAT MBh **	23.9		18.4	
	GRAND TOTAL HEAT MBh	55.4		3.1	
	TOTAL AIR VOLUME /CFM	2000		300	
	ENTERING AIR TEMPERATURE F°	54.8		68.3	
	INPUT - KW	8		5	
	CONTROL STEPS	2 STAGES		1 STAGES	
	UNIT VOLTAGE / PHASE	208/3	208/3	208/1	208/1
	MCA / MOCP				
	UNIT TYPE	SPLIT		SPLIT	
	DUCT LOCATION	HORIZ. SUPPLY, HORIZ. RETURN		VERT. SUPPLY, VERT. RET.	
	OUTDOOR AIR DB TEMP. F° (SUMMER / WINTER)		89/37		89/37
	EER		11.5		16
MANUFACTURER MODEL		CARRIER FX4DNB061T008	CARRIER CA16NA060	MITSUBISHI PVA-A12	MITSUBISHI PUZ-A12
REMARKS / NOTES		3,4,5	1,2	3,4,5	1,2

* DIVISION 15 CONTRACTOR SHALL BE RESPONSIBLE FOR COORDINATING CIRCUIT BREAKER SIZE WITH DIVISION 16 CONTRACTOR

** SCHEDULED SENSIBLE HEAT DOES NOT INCLUDE MOTOR HEAT.

*** EXTERNAL STATIC PRESSURE INCLUDES FILTER RESISTANCE.

NOTES

1. PROVIDE HURRICANE TIE-DOWN AND MOUNTING
2. PROVIDE FOR LOW AMBIENT OPERATION, VSD
3. PROVIDE DUCT MOUNTED SMOKE DETECTORS FOR UNITS MEETING OR EXCEEDING 2000 CFM
4. MECHANICAL CONTRACTOR SHALL PROVIDE ALL NECESSARY STEP-DOWN TRANSFORMERS FOR LOW VOLTAGE CONTROLS WIRING. ELECTRICAL CONTRACTOR SHALL PROVIDE NECESSARY POWER TO TRANSFORMER.
5. PROVIDE AUTOMATIC OUTSIDE AIR DAMPENER CONTROLLER AND INTERLOCK WITH CU.

STATE OF TEXAS
JANET MURRAY HOFFMAN
102117
PROFESSIONAL ENGINEER

The seal appearing on this document was authorized by JANET MURRAY HOFFMAN P.E. 102117 12/7/2017

GALVESTON COUNTY
BEACH PAVILION
CRYSTAL BEACH, TX 77650

BE–Arc LLC Project No : C–13–007.01

bis Engineering
REG # F-11156
P.O. Box 1573
Galveston, Texas 77555
PH 409.621.5740
THIS PRINT IS THE PROPERTY OF BIS ENGINEERING IT MAY NOT BE TRACED, OR REPRODUCED, IN WHOLE OR IN PART, IT IS SUBMITTED WITHOUT PRIOR WRITTEN CONSENT FROM BIS ENGINEERING.

BRAX EASTERWOOD
DESIGN
2728 AVENUE Q SUITE 2
GALVESTON TEXAS 77550
PHONE 409–354–8976
EASTERWOOD@EAIA.COM

FOR PERMIT

DATE	REVISION

DESIGN DEVELOPMENT

DATE ISSUED:
12/7/2017

COPYRIGHT 2017

M4.0

COUNTY APPROVAL:
SIGNATURE _____ DATE _____

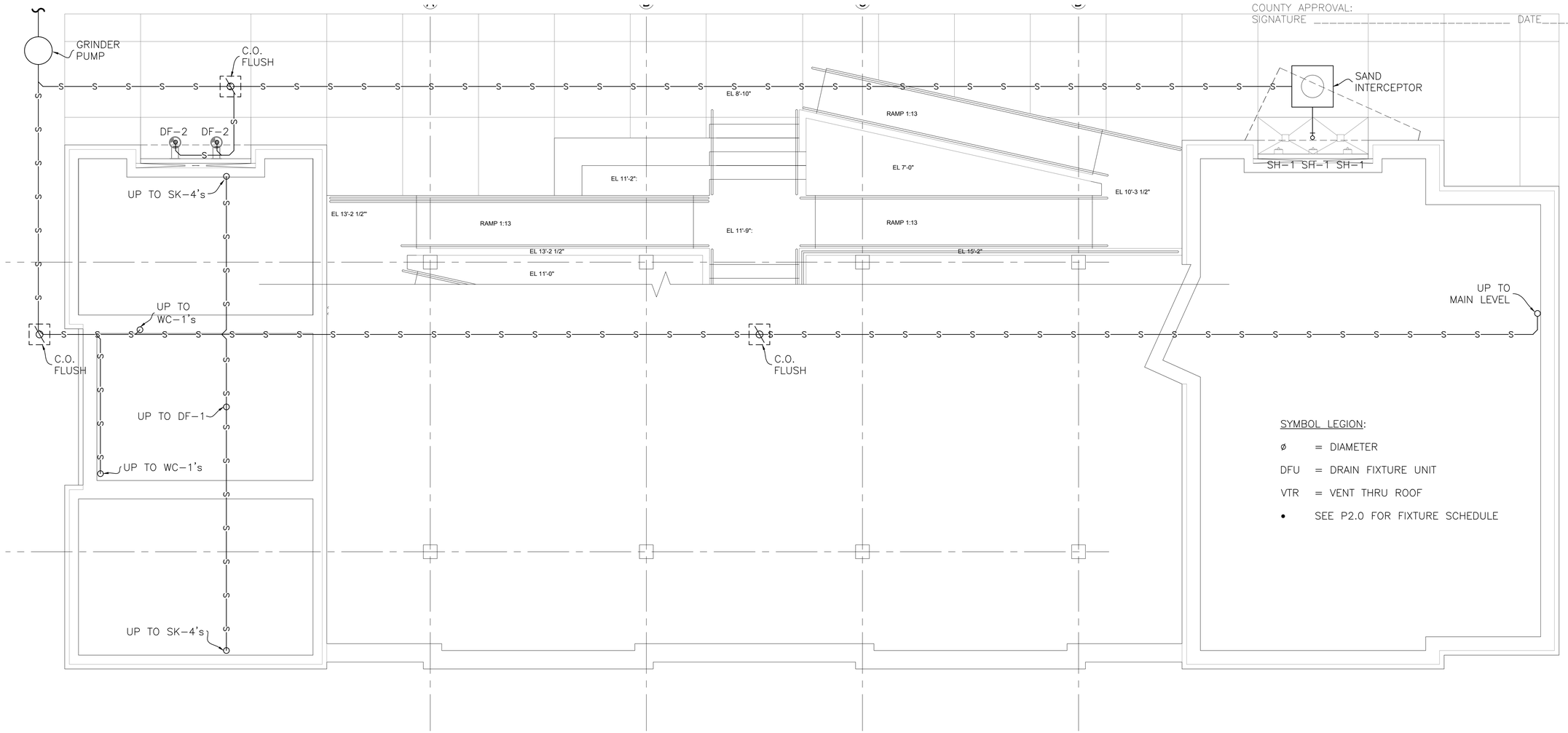

SYMBOL LEGION:

ø = DIAMETER

DFU = DRAIN FIXTURE UNIT

VTR = VENT THRU ROOF

• SEE P2.0 FOR FIXTURE SCHEDULE

1 LOWER LEVEL PLUMBING PLAN
SCALE: 1/4" = 1'-0"

STATE OF TEXAS
NORMAN S. HOFFMAN
95483
LICENSED PROFESSIONAL ENGINEER

The seal appearing on this document was authorized by NORMAN HOFFMAN P.E. 95483 12/7/2017

GALVESTON COUNTY
BEACH PAVILION
CRYSTAL BEACH, TX 77650

BE-Arc LLC Project No : C-13-007.01

bis Engineering
REG # F-11156
P.O. Box 1373
Galveston, TX 77555
PH 409.621.5740
THIS PRINT IS THE PROPERTY OF BIS ENGINEERING IT MAYS NOT BE TRACED, OR REPRODUCED IN WHOLE OR IN PART OR BE SUBMITTED WITHOUT PRIOR WRITTEN CONSENT FROM BIS ENGINEERING.

BRAX EASTERWOOD
DESIGN
2728 AVENUE Q SUITE 2
GALVESTON TEXAS 77550
PHONE 409-354-8976
EASTERWOOD@BEAIA.COM

FOR PERMIT

DATE	REVISION

DESIGN DEVELOPMENT

DATE ISSUED:
12/7/2017

COPYRIGHT 2017

P1.0

COUNTY APPROVAL:
SIGNATURE _____ DATE_____

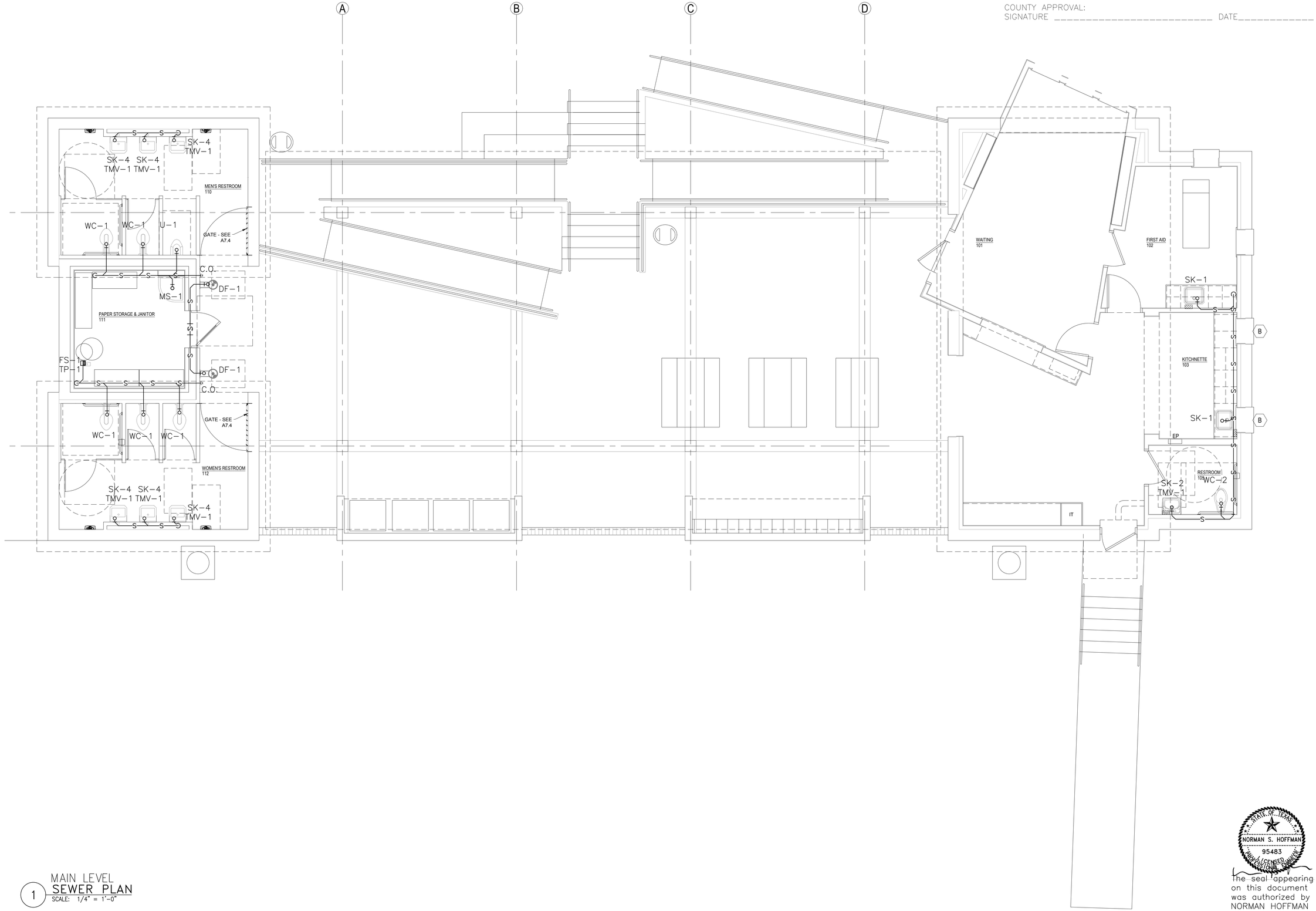

1 MAIN LEVEL
SEWER PLAN
SCALE: 1/4" = 1'-0"

The seal appearing on this document was authorized by NORMAN HOFFMAN P.E. 95483 12/7/2017

STATE OF TEXAS
NORMAN S. HOFFMAN
95483
LICENSED
PROFESSIONAL ENGINEER

GALVESTON COUNTY
BEACH PAVILION
CRYSTAL BEACH, TX 77650

BE-Arc LLC Project No : C-13-007.01

bis Engineering
REG # F-11156
P.O. Box 1373
Galveston, TX 77555
PH 409.621.6740
THIS PRINT IS THE PROPERTY OF BIS ENGINEERING IT MAY NOT BE TRACED, OR REPRODUCED IN WHOLE OR IN PART IT BE SUBMITTED WITHOUT PRIOR WRITTEN CONSENT FROM BIS ENGINEERING.

BRAX EASTERWOOD
DESIGN
2728 AVENUE Q SUITE 2
GALVESTON TEXAS 77550
PHONE 409-354-8976
EASTERWOOD@BEAIA.COM

FOR PERMIT

DATE	REVISION

DESIGN DEVELOPMENT

DATE ISSUED:
12/7/2017

COPYRIGHT 2017

P1.1

COUNTY APPROVAL:
SIGNATURE _____ DATE_____

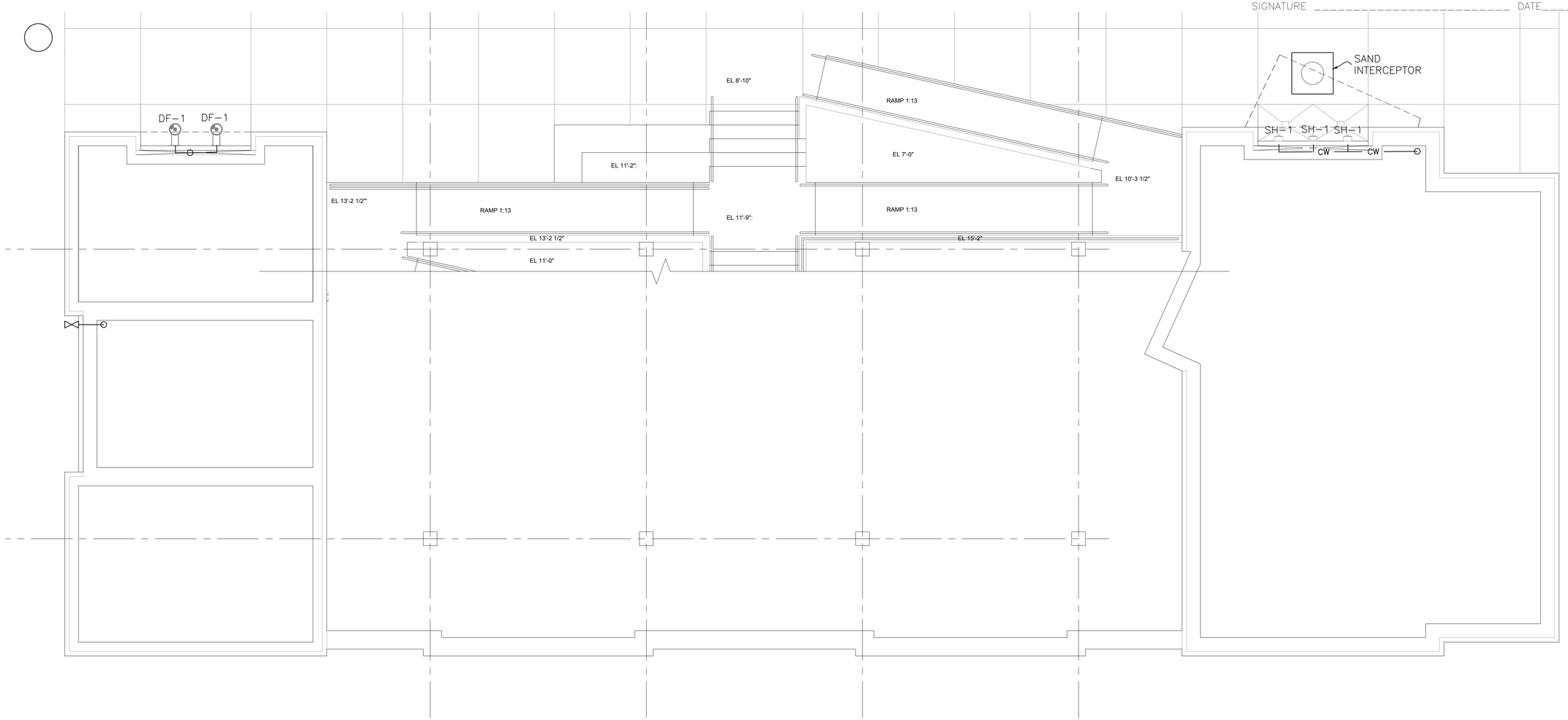

1 LOWER LEVEL
HOT & COLD WATER PLAN
SCALE: 1/4" = 1'-0"

STATE OF TEXAS
NORMAN S. HOFFMAN
95483
LICENSED
PROFESSIONAL ENGINEER

The seal appearing on this document was authorized by NORMAN HOFFMAN P.E. 95483 12/7/2017

GALVESTON COUNTY BEACH PAVILION CRYSTAL BEACH, TX 77650

BE-Arc LLC Project No : C-13-007.01

bis Engineering
REG # F-11156
P.O. Box 1573
Galveston, TX 77555
PH 409.621.5740

THIS PRINT IS THE PROPERTY OF BIS ENGINEERING IT MAYS NOT BE TRACED, OR REPRODUCED IN ANY FORM OR MANNER WHATSOEVER, NOR LOANED, OR TRANSFERRED TO ANY THIRD PARTY, IF IT BE SUBMITTED WITHOUT PRIOR WRITTEN CONSENT FROM BIS ENGINEERING.

BRAX EASTERWOOD
DESIGN
2728 AVENUE Q SUITE 2
GALVESTON TEXAS 77550
PHONE 409-354-8976
EASTERWOOD@BEAIA.COM

FOR PERMIT

DATE	REVISION

DESIGN DEVELOPMENT

DATE ISSUED:
12/7/2017

COPYRIGHT 2017

P1.2

COUNTY APPROVAL:
SIGNATURE _____ DATE_____

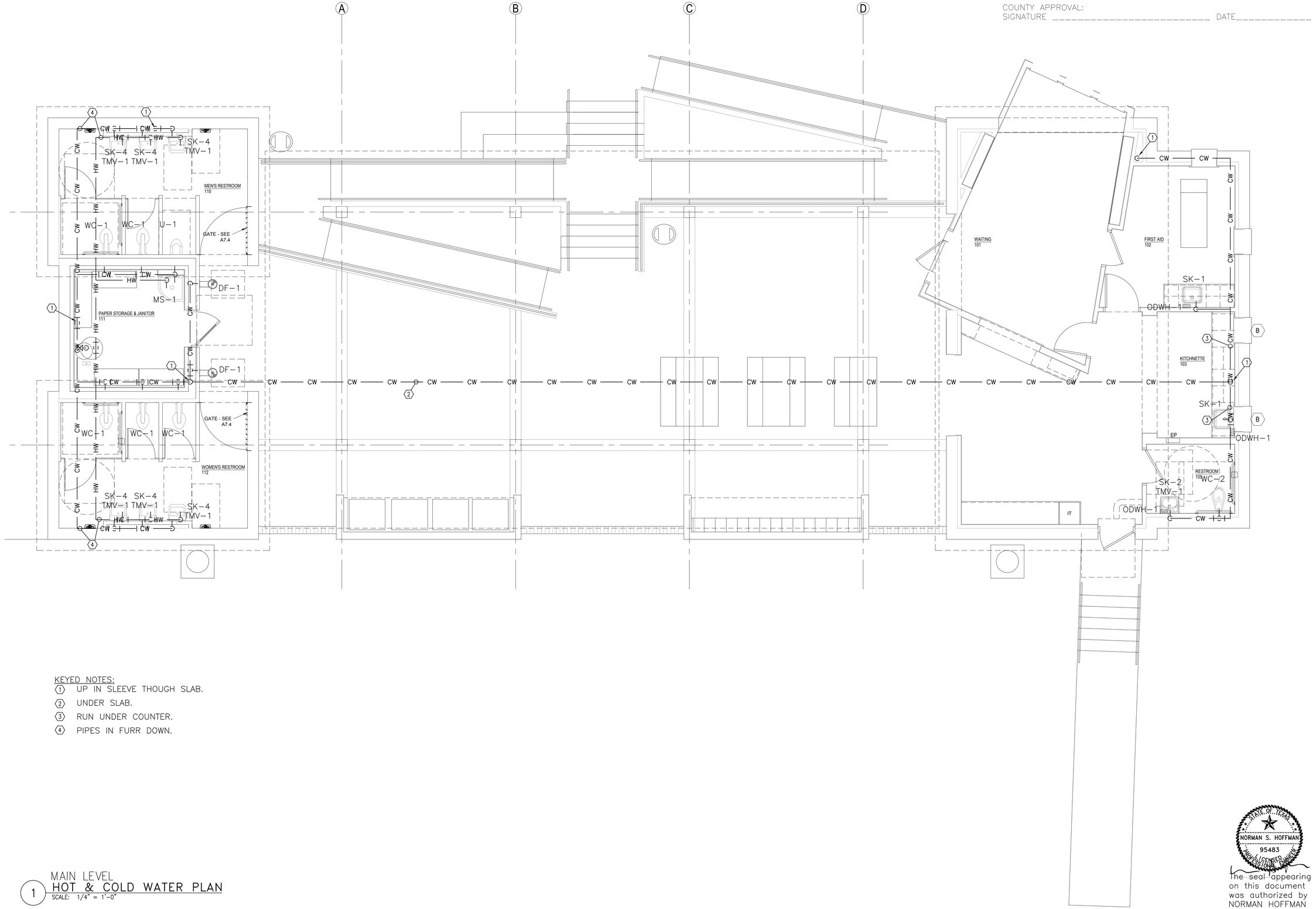

KEYED NOTES:

1. UP IN SLEEVE THOUGH SLAB.
2. UNDER SLAB.
3. RUN UNDER COUNTER.
4. PIPES IN FURR DOWN.

1 MAIN LEVEL
HOT & COLD WATER PLAN
SCALE: 1/4" = 1'-0"

STATE OF TEXAS
NORMAN S. HOFFMAN
95483
LICENSED
PROFESSIONAL ENGINEER

The seal appearing on this document was authorized by NORMAN HOFFMAN P.E. 95483 12/7/2017

GALVESTON COUNTY BEACH PAVILION CRYSTAL BEACH, TX 77650

BE-Arc LLC Project No : C-13-007.01

bis Engineering
REG # F-11156
P.O. Box 1373
Galveston, Texas 77555
PH 409.621.6740
THIS PRINT IS THE PROPERTY OF BIS ENGINEERING IT MAY NOT BE TRACED OR REPRODUCED IN WHOLE OR IN PART IT BE SUBMITTED WITHOUT PRIOR WRITTEN CONSENT FROM BIS ENGINEERING.

BRAX EASTERWOOD
DESIGN
2728 AVENUE Q SUITE 2
GALVESTON TEXAS 77550
PHONE 409-354-8976
EASTERWOOD@BEAIA.COM

FOR PERMIT

DATE	REVISION

DESIGN DEVELOPMENT

DATE ISSUED:
12/7/2017

COPYRIGHT 2017

P1.3

Point of Use "Non-Thermostatic"

Single Point and Flow Controlled **(Designed for cold water feed only)**

Specifications
Electric Tankless Hot Water Heater

Applications

- Hand washing (0.35-2.0 GPM)
- Kitchen/bar/utility sinks
- Manufacturing facilities
- Hand set shower (0.7-2.0 GPM)
- Dual handwash sinks (DL option)
- Modular buildings and tenant spaces

Performance Features

- On demand hot water. Flow switch activates heater only on demand (no standby heat loss). 99% efficient
- Endless hot water – no storage capacity to run out
- Easy installation. No T&P relief valve needed (check local codes). Only one cold water line need be brought to installation, mounts on wall
- High temperature limit switch with automatic reset
- Optional flow restricting aerator (for EX-DL models) ensures proper temperature rise. Standard with SP models
- Prevents Legionella bacteria growth
- Reduces calcification, liming and sedimentation
- Complies with handicap ADA physical installation requirements
- Ni Chrome element – a unique, patented flow path ensures optimum heat transfer and extended element life
- Warranty – Heaters, against failure due to leaks of "Heater Body/Element Assembly", five (5) years – Parts, one (1) year

Product Specifications

Dimensions:	10.75" x 5.25" x 2.78"
Weight:	4 lbs.
Cover:	ABS UL rated 94V0.
Color:	White
Element:	Replaceable cartridge insert
Fittings:	SP – 3/8" compression fitting at top of unit EX – 1/2" (5/8" OD) compression fitting at bottom of unit
Operating Pressure:	Min. 25 PSI, max. 150 PSI
UL listed file number:	E66687

U.S. Patent #'s: 4,762,980 and 4,960,976

Special Design Service

Inquiries for units for unique applications are welcome.
Call our Technical Service department at **1-800-543-6163**.

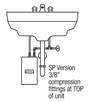

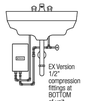

Pictured, EX: Bottom Water Connections

U.S. Patent #'s: 4,762,980 and 4,960,976

The wetted surface of this product contacted by water contains less than 0.25% lead and meets ANSI/NSF 372

Suggested Specification

Tankless water heater shall be an Eemax Non-Thermostatic model number _____.

Unit shall have ABS-UL 94V0 rated cover. Element shall be replaceable cartridge insert. Unit shall have replaceable filter in the inlet connector. Element shall be iron free, nickel chrome material. Water heater to be supplied with compression fittings. EX models will have 1/2 fittings on the bottom of unit, SP units to have 3/8" fittings on the top of unit. Maximum operating pressure of 150 PSI. Hot water storage tanks prohibited. Unit shall be Eemax or approved equal. NOTE: Refer to rating chart for product information.

Specification options available on EX models:

____ **DL** Dual Lavs- supplied with two faucet aerators
____ **SL** Single Lav – supplied with 3/8" compression fittings (0.5 or 1.0 GPM aerator included).
____ **N4** NEMA 4 waterproof cabinet w/powder coat finish
____ **N4X** NEMA 4 stainless steel waterproof corrosion-resistant cabinet

Series 1
Single Point and Flow Controlled

Point of Use "Non-Thermostatic"

Single Point and Flow Controlled (Designed for cold water feed only)

Specifications
Electric Tankless Hot Water Heater

	MODEL NUMBER	kW	AMPS	TURN ON (GPM)	RECOMMENDED WIRE SIZE (CU)	TEMPERATURE RISE °F 0.5 GPM	0.75 GPM	1.0 GPM	1.5 GPM
	VOLTS 120								
C	**SP2412†**	2.4kW	20A	0.3	12 AWG	33°	–	–	–
C	**EX2412**	2.4kW	20A	0.3	12 AWG	33°	–	–	–
C	**SP3012†**	3.0kW	25A	0.3	10 AWG	41°	–	–	–
C	**EX3012**	3.0kW	25A	0.3	10 AWG	41°	–	–	–
C	**SP3512†**	3.5kW	29A	0.3	10 AWG	48°	–	–	–
C	**EX3512**	3.5kW	29A	0.3	10 AWG	48°	–	–	–
	VOLTS 208 Single Phase								
C	**SP3208†**	3.0kW	15A	0.3	14 AWG	41°	–	–	–
C	**EX3208**	3.0kW	15A	0.3	14 AWG	41°	–	–	–
C	**SP4208†**	4.1kW	20A	0.3	12 AWG	56°	–	–	–
C	**EX4208**	4.1kW	20A	0.3	12 AWG	56°	–	–	–
C	**SP6208†**	6.3kW	40A	0.7	8 AWG	–	76°	57°	38°
C	**SP6208 DL†**	6.3kW	40A	0.7	8 AWG	–	76°	57°	38°
C	**EX6208**	6.3kW	40A	0.7	8 AWG	–	76°	57°	38°
C	**EX6208 DL**	6.3kW	40A	0.7	8 AWG	–	76°	57°	38°
	VOLTS 240†								
C	**SP35†**	3.5kW	15A	0.3	14 AWG	48°	32°	24°	16°
C	**SP35†** (derated 208V perf.)	2.7kW	13A	0.3	"	37°	24°	18°	11°
C	**EX35**	3.5kW	15A	0.3	14 AWG	48°	32°	24°	16°
C	**EX35** (derated 208V perf.)	2.7kW	13A	0.3	"	37°	24°	18°	11°
C	**EX35 SL**	3.5kW	15A	0.3	14 AWG	48°	32°	24°	16°
C	**SP40†**	4.0kW	20A	0.5	12 AWG	64°	42°	31°	21°
C	**SP40†** (derated 208V perf.)	3.0kW	17A	0.5	"	49°	33°	25°	16°
C	**SP40 DL**	4.0kW	20A	0.5	12 AWG	64°	42°	31°	21°
C	**EX40**	4.0kW	20A	0.5	12 AWG	64°	42°	31°	21°
C	**EX40** (derated 208V perf.)	3.0kW	17A	0.5	"	49°	33°	25°	16°
C	**EX40 SL**	4.0kW	20A	0.5	12 AWG	64°	42°	31°	21°
C	**EX40 DL**	4.0kW	20A	0.5	12 AWG	64°	42°	31°	21°
C	**SP50†**	5.0kW	23A	0.5	10 AWG	75°	50°	38°	25°
C	**SP50†** (derated 208V perf.)	4.1kW	20A	0.5	"	56°	38°	28°	19°
C	**SP55 DL†**	5.5kW	23A	0.5	10 AWG	75°	50°	38°	25°
C	**EX55**	5.5kW	23A	0.5	10 AWG	75°	50°	38°	25°
C	**EX55** (derated 208V perf.)	4.1kW	20A	0.5	"	56°	38°	28°	19°
C	**EX55 DL**	5.5kW	23A	0.5	10 AWG	75°	50°	38°	25°
C	**EX55 SL**	5.5kW	23A	0.5	10 AWG	75°	50°	38°	25°
C	**SP60†**	6.5kW	27A	0.7	10 AWG	–	59°	44°	30°
C	**SP60†** (derated 208V perf.)	4.9kW	24A	0.7	"	66°	44°	33°	22°
C	**SP65 DL†**	6.5kW	27A	0.7	10 AWG	–	59°	44°	30°
C	**EX65**	6.5kW	27A	0.7	10 AWG	–	59°	44°	30°
C	**EX65** (derated 208V perf.)	4.9kW	24A	0.7	"	66°	44°	33°	22°
C	**EX65 DL**	6.5kW	27A	0.7	10 AWG	–	59°	44°	30°
C	**EX65 SL**	6.5kW	27A	0.7	10 AWG	–	59°	44°	30°
C	**SP75†**	7.5kW	32A	0.7	8 AWG	–	68°	51°	34°
C	**SP75†** (derated 208V perf.)	5.6kW	27A	0.7	"	77°	51°	38°	26°
C	**SP75 DL†**	7.5kW	32A	0.7	8 AWG	–	68°	51°	34°
C	**EX75**	7.5kW	32A	0.7	8 AWG	–	68°	51°	34°
C	**EX75** (derated 208V perf.)	5.6kW	27A	0.7	"	77°	51°	38°	26°
C	**EX75 DL**	7.5kW	32A	0.7	8 AWG	–	68°	51°	34°
C	**EX75 SL**	7.5kW	32A	0.7	8 AWG	–	68°	51°	34°
C	**SP95†**	9.5kW	40A	0.7	8 AWG	–	87°	65°	43°
C	**SP95†** (derated 208V perf.)	7kW	34A	0.7	"	95°	64°	48°	32°
C	**SP95 DL†**	9.5kW	40A	0.7	8 AWG	–	87°	65°	43°
C	**EX95**	9.5kW	40A	0.7	8 AWG	–	87°	65°	43°
C	**EX95** (derated 208V perf.)	7kW	34A	0.7	"	95°	64°	48°	32°
C	**EX95 DL**	9.5kW	40A	0.7	8 AWG	–	87°	65°	43°
C	**EX95 SL**	9.5kW	40A	0.7	8 AWG	–	87°	65°	43°

	MODEL NUMBER	kW	AMPS	TURN ON (GPM)	RECOMMENDED WIRE SIZE (CU)	TEMPERATURE RISE °F 0.5 GPM	0.75 GPM	1.0 GPM	1.5 GPM
	VOLTS 277								
	SP3277†	3.0kW	11A	0.3	14 AWG	41°	–	–	–
	EX3277	3.0kW	11A	0.3	14 AWG	41°	–	–	–
	SP4277†	4.1kW	14.8A	0.3	14 AWG	56°	37°	28°	19°
	EX4277	4.1kW	14.8A	0.3	14 AWG	56°	37°	28°	19°
	SP60†	6.0kW	22A	0.7	10 AWG	–	55°	41°	27°
	SP60 DL†	6.0kW	22A	0.7	10 AWG	–	55°	41°	27°
	EX60	6.0kW	22A	0.7	10 AWG	–	55°	41°	27°
	EX60 SL	6.0kW	22A	0.7	10 AWG	–	55°	41°	27°
	EX60 DL	6.0kW	22A	0.7	10 AWG	–	55°	41°	27°
	SP80†	8.0kW	29A	0.7	10 AWG	–	73°	55°	36°
	SP80 DL†	8.0kW	29A	0.7	10 AWG	–	73°	55°	36°
	EX80	8.0kW	29A	0.7	10 AWG	–	73°	55°	36°
	EX80 SL	8.0kW	29A	0.7	10 AWG	–	73°	55°	36°
	EX80 DL	8.0kW	29A	0.7	10 AWG	–	73°	55°	36°
	SP90†	9.0kW	33A	0.7	8 AWG	–	82°	61°	41°
	SP90 DL†	9.0kW	33A	0.7	8 AWG	–	82°	61°	41°
	EX90	9.0kW	33A	0.7	8 AWG	–	82°	61°	41°
	EX90 SL	9.0kW	33A	0.7	8 AWG	–	82°	61°	41°
	EX90 DL	9.0kW	33A	0.7	8 AWG	–	82°	61°	41°
	SP100†	10kW	36A	0.7	8 AWG	–	91°	68°	46°
	SP100 DL†	10kW	36A	0.7	8 AWG	–	91°	68°	46°
	EX100	10kW	36A	0.7	8 AWG	–	91°	68°	46°
	EX100 SL	10kW	36A	0.7	8 AWG	–	91°	68°	46°
	EX100 DL	10kW	36A	0.7	8 AWG	–	91°	68°	46°

* 240V units can be used on 208V single phase with 20% reduced temperature output. Please note per UL standards the rating plate and installation instructions will all be according to a 240V applied voltage. Check with local officials prior to derating the electrical infrastructure.
† 3/8" compression fittings at top of unit
"C" indicates evaluation and compliance to either Underwriters Laboratories (UL) or Intertek (ETL) under CAN/CSA-C22.2 No. 64/No. 88.

Suffix Definitions

DL Dual Lavs – Two faucet aerators provided
SL Single Lav – 3/8" compression connections

"EX"

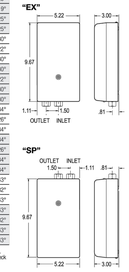

"SP"

NEMA 4/4X
For EX version only, NEMA cabinets not available for SP version.

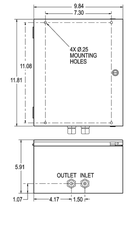

COUNTY APPROVAL:
SIGNATURE _____ DATE_____

D | DRAWING NUMBER S0710 (-M24) | SIZE A | SCALE NONE | DATE: 07/23/01 | APPROVED BY: AM | CHECKED BY: CR | DRAWN BY: JJ | FIGURE NUMBER 0710 (-M24)

WE CAN ASSUME NO RESPONSIBILITY FOR USE OF SUPERSEDED OR VOID DATA

DIMENSIONS ARE SUBJECT TO MANUFACTURING TOLERANCE AND CHANGE WITHOUT NOTICE

SMITH® JAY R. SMITH MFG. CO.®
DIVISION OF SMITH INDUSTRIES, INC.
POST OFFICE BOX 3207
MONTGOMERY, ALABAMA 36109-0207 (USA)
TEL: 334-277-6520 FAX: 334-272-7396 www.jrsmith.com
CUSTOMER DRIVEN
MEMBER OF:

LOCATION

LABOR SAVER® LAVATORY SUPPORTS
WITH CONCEALED ARMS
FLOOR MOUNTED TYPE WITH EXTENSION SET BEHIND _____" WALL

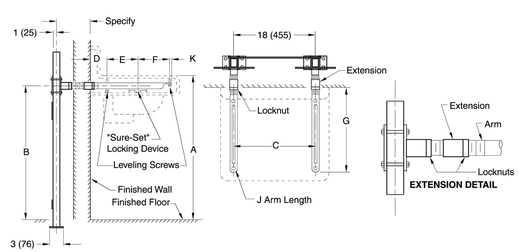

Fig. 0710 . . . FOR HIGH BACK LAVATORIES (shown)

NOTE: The rough-in dimensions listed on this drawing are based on current information available to Jay R. Smith by the fixture manufacturers. We recommend that you verify these dimensions with the fixture manufacturer. We will not accept responsibility for rough-in dimension changes by the fixture manufacturer.

NOTE: *This dimension includes a wall thickness of 1/2". For greater wall thickness, specify centerline of upright to finished wall dimension.

NOTE: Dimensions shown in parentheses are in millimeters.

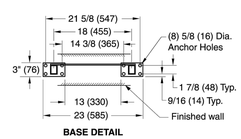

BASE DETAIL

ROUGH-IN TABLE

FIXTURE MFG.	NAME	NUMBER	SIZE

A	B	C	D	E	F	G	J	K

REV.	DATE	DESCRIPTION	BY	CKD. BY
D	07/23/08	Revised Plate Configuration	JJ	CL
C	12/06/02	Revised per George Flegel	JJ	AM
B	12/02/02	Added Extension Option	JJ	AM
A	12/19/01	Changed Hole Size in Base	JJ	AM

WEIGHT POUNDS | VOLUME CUBIC FEET | FIGURE NUMBER 0710 (-M24)

SYMMONS® the smart choice™

SCOT® S-60-H
Slow-Closing Omni Temperature Lavatory Faucet

SCOT metering/temperature selection lavatory faucet with blade type handle for handicap accessible applications (replaces S-60 knob style handle). Cast brass 4" centerset with temperature limit stop to adjust outlet temperature and time limit stop to adjust flow time, includes (2) in-line check/screen assemblies. Spray outlet with 0.5 gpm flow rate. Vandal resistant.

- ☐ ***S-60-H:*** ***Faucet only***
- ☐ ***S-60-G-H:*** ***With grid strainer drain assembly***
- ☐ ***S-60-1-H:*** ***With lift rod only***

Modifications: *Add suffix to model number*

- ☐ **Suffix 1.25:** Vandal resistant aerator in place of 0.5 gpm spray outlet (1.25 GPM at 50 PSI)
- ☐ **Suffix 0.35:** Vandal resistant aerator in place of 0.5 gpm spray outlet (0.35 GPM at 50 PSI)
- ☐ **Suffix NA:** Non-aerated laminar flow outlet
- ☐ **Suffix IPS:** 1/2" IPS connectors
- ☐ **Suffix STE:** Supply tube extensions, 8" with compression couplings
- ☐ **Suffix DP:** Adaptor plate for 8" center installations
- ☐ **Suffix OFG:** Offset grid strainer

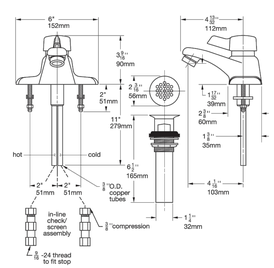

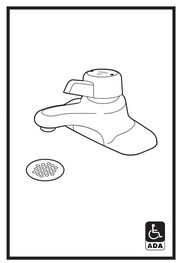

SYMMONS PRODUCTS MEET ASME A112.18.1; CSA B125.1 ANSI/NSF 372; ANSI/NSF 61.9 Metering Faucets 0.25 gallons per cycle (1.0 L/cycle)

Job/Location
. . . . . .
. . . . . .

Engineer
. . . . . .
. . . . . .

Contractor
. . . . . .
. . . . . .

For ADA compliance (Americans with Disabilities Act) consult ADAAG or your state regulations for proper product choice and mounting locations.

Symmons Industries, Inc. ▪ 31 Brooks Drive ▪ Braintree, MA 02184
(800) 796-6667 ▪ Fax (800) 961-9621
Website: www.symmons.com ▪ Email: gethelp@symmons.com

© 2010-2014 Symmons Industries, Inc. Printed in U.S.A. ▪ 062614

SYMMONS® the smart choice™

GALVESTON COUNTY
BEACH PAVILION
CRYSTAL BEACH, TX 77650

BE–Arc LLC Project No : C–13–007.01

BRAX EASTERWOOD
DESIGN
2728 AVENUE Q SUITE 2
GALVESTON TEXAS 77550
PHONE 409–354–8976
EASTERWOOD@EAIA.COM

FOR PERMIT

DATE	REVISION

DESIGN DEVELOPMENT

DATE ISSUED:
12/7/2017

COPYRIGHT 2017

STATE OF TEXAS
NORMAN S. HOFFMAN
95483
LICENSED
PROFESSIONAL ENGINEER

The seal appearing on this document was authorized by NORMAN HOFFMAN P.E. 95483 12/7/2017

P2.0

ES-LFUSG-B-M2

For Residential and Commercial Applications

Job Name _____ Contractor _____

Job Location _____ Approval _____

Engineer _____ Contractor's P.O. No. _____

Approval _____ Representative _____

LEAD FREE*

Series LFUSG-B

Under Sink Guardian®

The LFUSG-B-M2 Under Sink Guardian® ⅜" (10mm) compression and Quick-Connect fitting thermostatic mixing valves maintain and limit hot water to desired selectable temperature between 80°F and 120°F (27°C and 49°C) with flow rates as low as 0.25 gpm (1.0 lpm) and as high as 2.25 gpm (8.5 lpm). The mixing valve is listed to ASSE Standard 1070 for single fixture applications and IAPMO cUPC. The LFUSG-B-M2 features Lead Free* construction to comply with Lead Free* installation requirements. The superior flow characteristics of these valves provide temperature control with low pressure drop. As an added feature, the LFUSG-B-M2 incorporates dual check valves to protect against cross-flow and integral screens to filter out debris.

LFUSG-B-M2 LFUSG-B-QC-M2

ASSE 1070 & IAPMO cUPC Listed

Features

- Lead Free* Brass body construction
- Installs easily between the stop valves and faucet
- Includes tamper resistant locking nut to prevent accidental mis-adjustment
- Built-in check valves prevent migration of hot water to cold and cold water to hot water piping
- Provided with cap for three port application
- Integral strainer with 40 mesh stainless steel screens to filter out debris

Applications

The unit is intended for under sink installation to control the hot water temperature and minimize the occurrence of accidental scalding. The water temperature must be adjusted by the installer using a thermometer to measure the hot water temperature at the faucet outlet. Maximum temperature of 105°F (41°C) is recommended.

Specifications

A Thermostatic Mixing Valve shall be installed on the hot water supply to the fixture. The valve shall be ASSE Standard 1070 and IAPMO cUPC listed and control the temperature of the hot water. It shall have a Lead Free* brass 4-port, "H" pattern body. Lead Free* under counter thermostatic valves shall comply with state codes and standards, where applicable, requiring reduced lead content. The valve shall include integral check valves, integral screens and an adjustment nut with locking feature. The valve shall be provided with ⅜" (10mm) male compression or Quick-connect fittings. The valve shall be Watts Series LFUSG-B.

For satin chrome finish specify – SC.

Materials

Body: Lead Free* Brass
Rubber Disc: Buna-N
O-rings: Buna-N
Spring: Stainless steel
Piston: Noryl®
Thermostat: Copper

Approval

ASSE 1070

Pressure – Temperature

Minimum supply pressure: 30psi (207 kPa)
Hot inlet temperature: 120°F-180°F (49°C-82°C)
Cold inlet temperature: 39°F-80°F (3.8°C-27°C)
Minimum inlet temperature differential: 5°F (2.8°C)
Temperature range: 80°F-120°F (27°C-49°C)
Maximum pressure: 150psi (10.3 bar)
Minimum Flow: 0.25 gpm (1.0 l/m)

***The wetted surface of this product contacted by consumable water contains less than one quarter of one percent (0.25%) of lead by weight.**

Noryl® is a registered trademark of SABIC Innovative Plastics®.

Watts product specifications in U.S. customary units and metric are approximate and are provided for reference only. For precise measurements, please contact Watts Technical Service. Watts reserves the right to change or modify product design, construction, specifications, or materials without prior notice and without incurring any obligation to make such changes and modifications on Watts products previously or subsequently sold.

Basic Construction

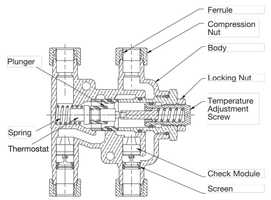

Flow Capacity

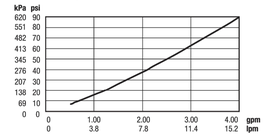

Dimensions – Weights

MODEL	SIZE	DIMENSIONS										WEIGHT	
		A		B		C		D					
		in.	mm	in.	mm	in.	mm	in.	mm			lbs.	kgs.
LFUSG-B-M2	⅜" Comp.	3⅝	81	3⅝	85	1 19/64	47	1½	38			.82	.37
LFUSG-B-SC-M2	⅜" Comp.	3⅝	81	3⅝	85	1 19/64	47	1½	38			.82	.37
LFUSG-B-QC-M2	⅜" Quick Connect	3¼	83	4	102	2¼	57	1½	38			1.05	.48
LFUSG-B-QC-SC-M2	⅜" Quick Connect	3¼	83	4	102	2¼	57	1½	38			1.05	.48

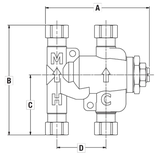

Typical Installations

Two Handle Faucet

Sensor Faucet

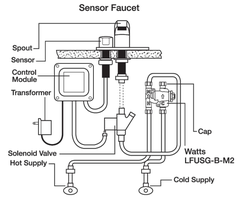

NOTICE

This information is not intended to replace the full product installation and safety information available or the experience of a trained product installer. You are required to thoroughly read all installation instructions and product safety information before beginning the installation of this product.

WATTS®

A Watts Water Technologies Company

USA: Tel: (978) 689-6066 • Fax: (978) 975-8350 • Watts.com
Canada: Tel: (905) 332-4090 • Fax: (905) 332-7068 • Watts.ca
Latin America: Tel: (52) 81-1001-8800 • Fax: (52) 81-8000-7091 • Watts.com

ES-LFUSG-B-M2 1433

© 2014 Watts

Dura-Ware®: 2115 Series
Siphon Jet Toilet - On Floor

2115-W-2
Fixture May Show Some Available Options

Please visit ***www.acorneng.com*** for most current specifications.

Siphon Jet Toilet - On Floor

Fixture is arranged to be installed on finished wall from the front side. It is fabricated from 16 gage, type 304 stainless steel and is seamless welded construction. Exterior has a satin finish with an integral contoured seat. The inside of the toilet bowl also has a satin finish. Wall flange is reinforced for maximum strength.

Toilet is Siphon Jet type with elongated bowl manufactured to comply with ASME A112.19.3-2008 and CSA B45.4-2008 standards. Toilet requires a minimum of 25 PSI flow pressure and uses a minimum water consumption of 1.28 GPF. Trap has a minimum 3-1/2" seal, will pass a 2-1/8" ball and is fully enclosed. Toilet has a 1-1/2" NPT flush valve connection and a gasketed waste outlet.

Flush Valve supply is additionally available for exposed or concealed flush valve styles in 1.28 GPF, 1.6 GPF or 3.5 GPF with 1-1/2" NPT connection.

Concealed floor anchor is furnished with two T-head anchor bolts, washers, and nuts.

GUIDE SPECIFICATION

Provide and install Acorn Dura-Ware Siphon Jet Toilet (specify model number and options). Fixture shall be fabricated from 16 gage, type 304 stainless steel. Construction shall be seamless welded and exposed surfaces shall have a satin finish with an integral contoured toilet seat. Toilet shall be concealed siphon jet type with an elongated bowl and a self-draining flushing rim. Toilet shall be ASME A112.19.3-2008 and CSA B45.4-2008 compliant. Toilet requires a minimum of 25 PSI flow pressure and uses a minimum water consumption of 1.28 GPF. Toilet trap shall have a minimum 3-1/2" seal that shall pass a 2-1/8" diameter ball and be fully enclosed. Toilet waste outlet shall be a gasketed waste.

Acorn Engineering Company • 15125 Proctor Avenue • P.O. Box 3527 • City of Industry, CA 91744-0527 U.S.A.
Tel: (800) 488-8999 • (626) 336-4561 • Fax: (626) 961-2200 • www.acorneng.com • E-mail: info@acorneng.com

MGI SpecBuilder™ —— Configure products and create specs with ease. —— Get Started ➔ www.mgispecbuilder.com

Dura-Ware®: 2115 Siphon Jet Toilet - On Floor

WALL THICKNESS AND TYPE (Must Specify)
Thickness: _____ Type: ❑ Concrete ❑ Block ❑ Steel

MODEL NUMBER AND OPTIONS SELECTION:

BASE MODEL NUMBER
☑ 2115 Siphon Jet Toilet

SUPPLY (Must Specify)
❑ -T Top (Exposed)
❑ -W Wall (Concealed)

FIXTURE MOUNTING AND WASTE (Must Specify)
☑ -2 On-Floor, Wall Outlet

FLUSH VALVE GPFs (Must Specify)
❑ -1.28 GPF (HET)
❑ -1.6 GPF (Not Available in California)
❑ -3.5 GPF (Not Available in California)

FLUSH VALVE OPTIONS (Must Specify)
REFER TO ACORN DURA-WARE ACCESSORIES FOR FLUSH VALVE COVER #2802, BOX #2803-1 AND PANEL #2898
❑ -FV Flush Valve, Mechanical (N/A for ADA)
❑ -FVBO Flush Valve by Other
❑ -FVH Flush Valve, Hydraulic (N/A for Top Supply)
❑ -FVL Flush Valve, ADA Lever Handle
❑ -MVCFV Time-Trol Flush Valve (N/A for Top Supply)

TOILET SEAT OPTIONS
❑ -HPS High Polish Integral Seat
❑ -HS-OFLC Hinged Seat, Open Front Less Cover
❑ -HS-OFWC Hinged Seat w/ Cover
❑ -PFS Punched for Seat by Others

TOILET OPTIONS
❑ -FT Flood-Trol (N/A with Top Supply)
❑ -FTA Flood-Trol Auto-Reset (N/A with Top Supply)
❑ -FTE Flood-Trol Electronic
❑ -FVT Flush Thru Wall Connector
❑ -PE Plain End Waste Extended 3" Beyond Rear of Fixture
❑ -TSC Toilet Shipping Cover

PRODUCT OPTIONS
❑ -ADA 18" Integral Seat Height
❑ -BCN Blind Cap Nuts (4)
❑ -BL Bedpan Lugs
❑ -CN Cap Nuts (4)
❑ -EG Enviro-Glaze Color Specify:_____ Toilet Interior & Exterior
❑ -EGE Enviro-Glaze Color Specify:_____ Toilet Exterior Only
❑ -FG 14 Gage Housing
❑ -TF Transformer, 120VAC to 24VAC (-MVCFV option)
❑ -VAC AcornVac System

Please visit ***www.acorneng.com*** for most current specifications.

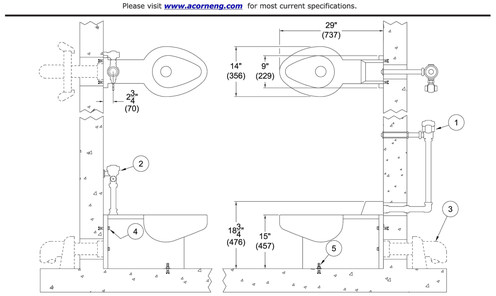

NOTES:
1. Optional -FV Flush Valve - Wall Supply
2. Optional -FV Flush Valve - Top Supply
3. Waste Fitting (By Others)
4. Wall Fasteners
5. Floor Fasteners

Important: Installation instructions and current rough-in are furnished with each fixture. Do not rough in without certified dimensions.
Dimensions are subject to manufacturer's tolerance of plus or minus 1/4" and change without notice. Acorn assumes no responsibility for use of void or superseded data. © Copyright 2009 Acorn Engineering Company

Selection Summary	Approved for Manufacturing
Model No. & Option_____	Company_____Title_____
Quantity_____	Signature_____ Date_____

Acorn Engineering Company • 15125 Proctor Avenue • P.O. Box 3527 • City of Industry, CA 91744-0527 U.S.A.
Tel: (800) 488-8999 • (626) 336-4561 • Fax: (626) 961-2200 • www.acorneng.com • E-mail: info@acorneng.com

COUNTY APPROVAL:
SIGNATURE _____ DATE_____

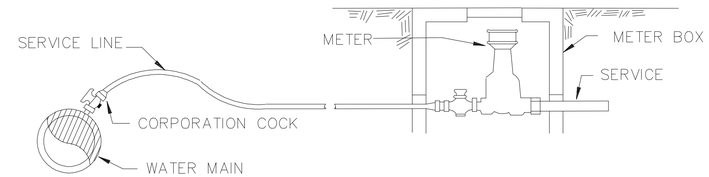

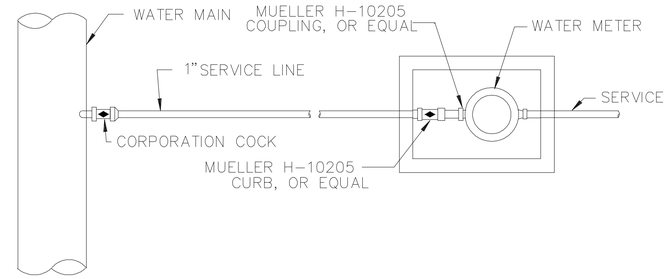

GALVESTON COUNTY
BEACH PAVILION
CRYSTAL BEACH, TX 77650

BE-Arc LLC Project No : C-13-007.01

BRAX EASTERWOOD
DESIGN
2728 AVENUE Q SUITE 2
GALVESTON TEXAS 77550
PHONE 409-354-8976
EASTERWOOD@BEAIA.COM

FOR PERMIT

DATE	REVISION

DESIGN DEVELOPMENT

DATE ISSUED:
12/7/2017

COPYRIGHT 2017

STATE OF TEXAS
NORMAN S. HOFFMAN
95483
LICENSED PROFESSIONAL ENGINEER

The seal appearing on this document was authorized by NORMAN HOFFMAN P.E. 95483 12/7/2017

P2.1

COUNTY APPROVAL:
SIGNATURE _____ DATE_____

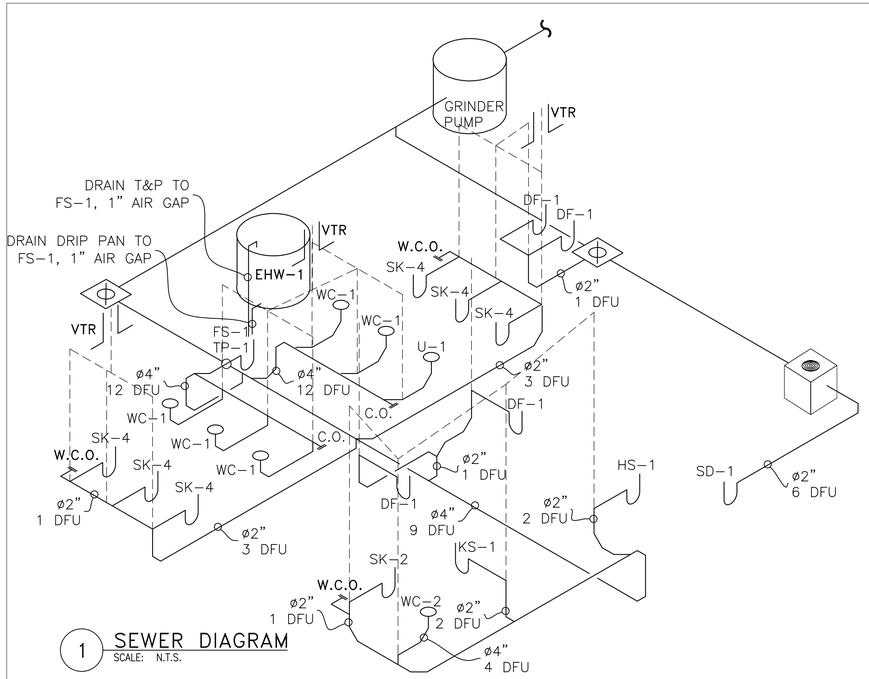

1 SEWER DIAGRAM
SCALE: N.T.S.

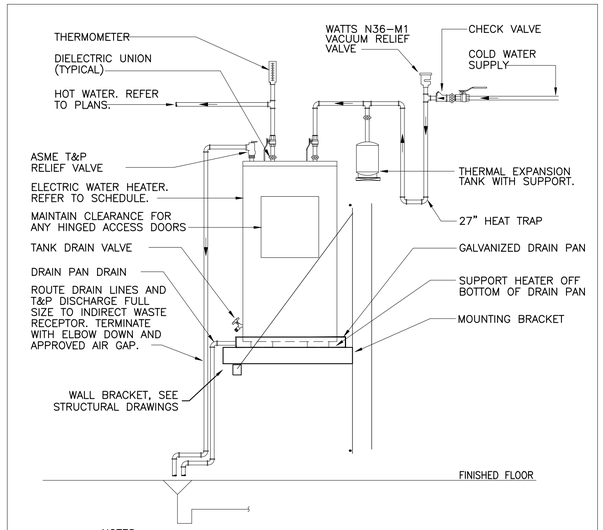

NOTES:
1. PROVIDE 1" PIPE INSULATION HAVING A CONDUCTIVITY NOT EXCEEDING 0.28 BTU PER INCH/HR x S.F. x °F ON ALL DOMESTIC HOT WATER AND RETURN PIPING.
2. PROVIDE AQUASTAT CONTROL OF HOT WATER CIRCULATING PUMP. RE: PLANS AND HOT WATER CIRCULATING PUMP DETAIL.

1 ELECTRIC WATER HEATER PIPING
SCALE: NONE

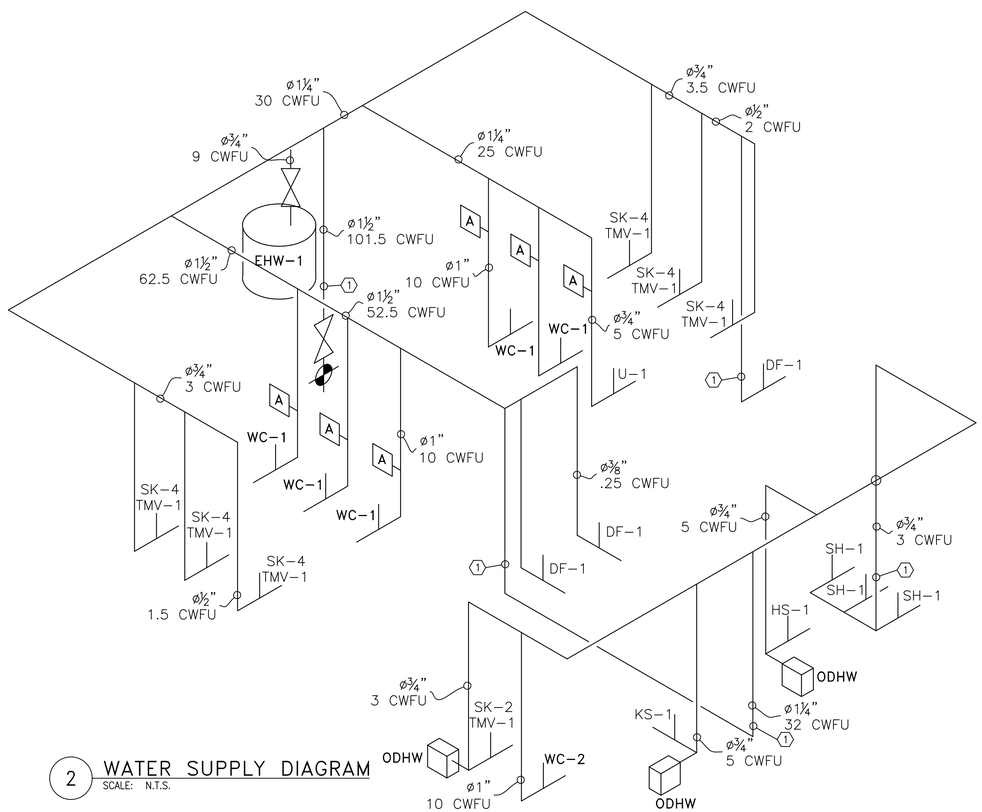

2 WATER SUPPLY DIAGRAM
SCALE: N.T.S.

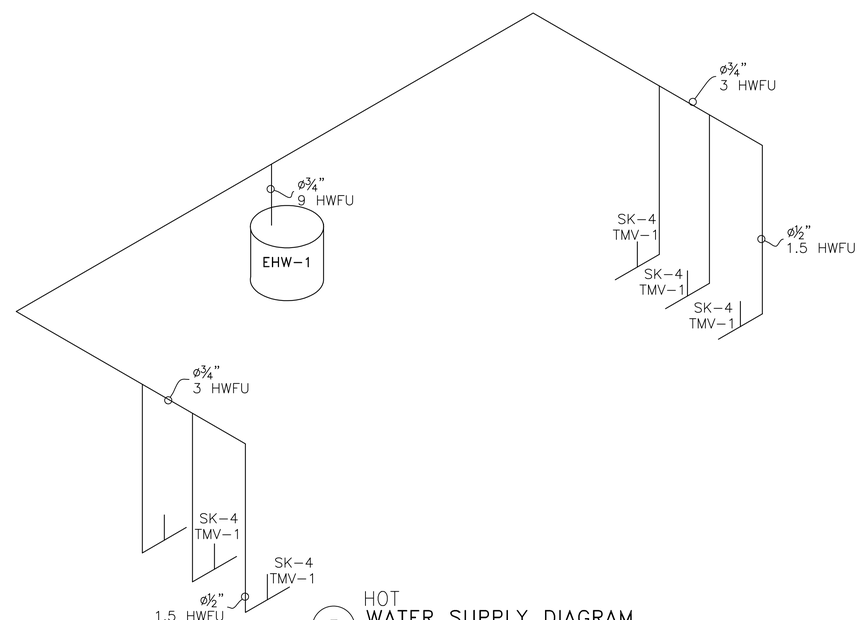

3 HOT WATER SUPPLY DIAGRAM
SCALE: N.T.S.

STATE OF TEXAS
NORMAN S. HOFFMAN
95483
LICENSED
PROFESSIONAL ENGINEER

The seal appearing on this document was authorized by NORMAN HOFFMAN P.E. 95483 12/7/2017

GALVESTON COUNTY
BEACH PAVILION
CRYSTAL BEACH, TX 77650

BE-Arc LLC Project No : C-13-007.01

bis Engineering
REG # F-11156
P.O. Box 1373
Galveston, Tx. 77555
PH 409.621.6740
THIS PRINT IS THE PROPERTY OF BIS ENGINEERING IT MAY NOT BE TRACED, OR REPRODUCED, IN WHOLE OR IN PART, OR BE SUBMITTED WITHOUT PRIOR WRITTEN CONSENT FROM BIS ENGINEERING.

BRAX EASTERWOOD
DESIGN
2728 AVENUE Q SUITE 2
GALVESTON TEXAS 77550
PHONE 409-354-8976
EASTERWOOD@BEAIA.COM

FOR PERMIT

DATE	REVISION

DESIGN DEVELOPMENT

DATE ISSUED:
12/7/2017

COPYRIGHT 2017

P2.2

COUNTY APPROVAL:
SIGNATURE ______________________________ DATE______________

Willoughby Industries - *Parks and Recreation*

WILLOUGHBY

WODF-1WM Series
Wall Mounted
Outdoor Drinking Fountain

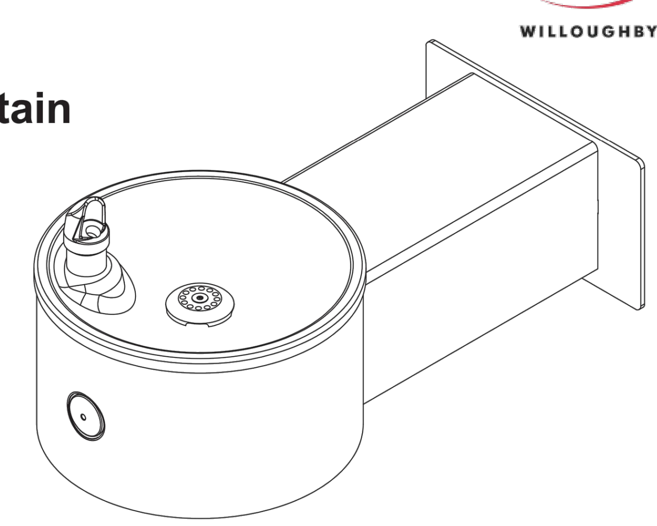

IN COMPLIANCE WITH A.D.A. 2010

Recommended Specifications

Willoughby Model **WODF-1WM** wall mounted outdoor drinking fountain is a single-level, vandal resistant drinking fountain with Type 304 stainless steel 10" Schedule-10 main column and 7 GA. flange.

Fountain shall have high-polished, 18 GA. stainless steel bowl with anti-rotation, anti-squirt, solid stainless steel bubbler. Bubbler shall be activated by pedestal mounted solid stainless steel push button assembly, which controls a lead-free, self-closing valve.

Push button shall require less than 5 lbs. of force to operate. Push button shall be adjustable to ensure adequate flow without being wasteful. **WODF-1WM** fountain shall be lead-free, adhering to ANSI/NSF 61, Section 9, ANSIA117.1.

When the drinking fountain bowl is mounted at an appropriate height (34" max A.F.F. for Adult ADA, 31" max A.F.F. for JR. ADA), it shall meet American Disabilities Act of 2010 (ADA) compliance requirements.

Standard Features

* Adult ADA or Child (JR.) ADA compliant
* 5/32" wall thickness stainless steel wall column
* ~~Heavy duty Type 304 stainless steel 10" Schedule-10 main column and 7 GA. flange~~
* ~~Optional~~ marine-grade Type 316 stainless steel body for installations near salt water
* High polished stainless steel bowl
* Solid stainless steel, anti-rotation bubbler
* Serviceable mesh strainer on inlet water supply
* Heavy-duty main access panel
* Resistant to sunlight, heat and vandalism
* Stainless steel adjustable push button

To specify fixture and color, use the Model Number and Options Guide.
Example: To specify a WODF-1WM wall mounted outdoor drinking fountain in Blue color
Use the following Willoughby Model Number: **WODF-1WM-BL**

Willoughby Industries - *Security Products*

WILLOUGHBY

ETWS-1490-FM
Wall Outlet
Floor Mounted
Siphon Jet Series
Water Closet

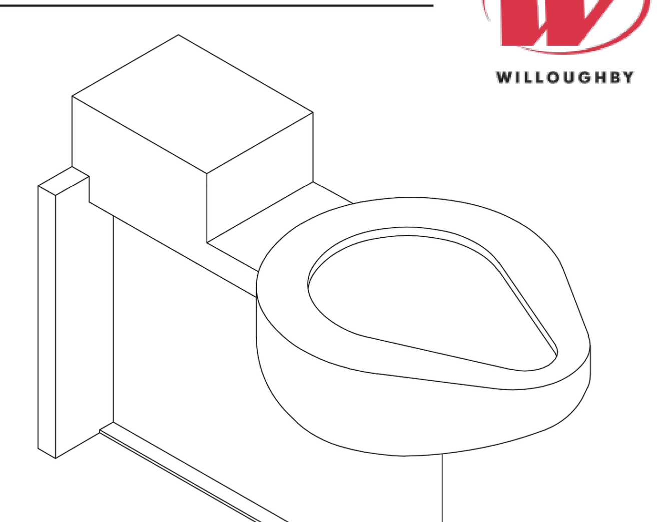

(1.6 GPF UNIT W/ 15" A.F.F. SEAT HEIGHT* SHOWN)
(Unit may be shown with optional features)

IN COMPLIANCE WITH A.D.A. 2010
* USE "HC" SUFFIX FOR 18" A.F.F.SEAT HEIGHT

To specify fixture and accessories, use the Model Number and Options page.
Example: To specify a Wall Outlet, Floor Mounted, Siphon Jet Series Toilet with back spud, standard 15" seat height, 1.6 GPF, toilet waste extension, 3" PVC waste connection, hydraulic flush valve, flush valve connection, high polish seat, wall sleeve, and toilet shipping cover
Use the following Willoughby Model Number: **ETWS-1490-FM-BS-1.6-TWE-TWC3P-FV-FVT-HPS-WS-TSC**

Recommended Specifications

Wall Outlet, Floor Mounted, Siphon Jet Series Toilet shall be:
Willoughby Model No. **ETWS-1490-FM**
(Select from model number and options list on next page)

Fixture shall be fabricated from 14 gauge, type 304 stainless steel. The construction shall be all welded, with exposed stainless surfaces polished to a #4 satin finish.

Standard toilet shall include:
- Elongated toilet bowl with contoured seat
- Integral crevice-free self-draining flushing rim with positive afterfill
- Fully enclosed 2-1/2" O.D. trap which shall maintain a minimum 2" seal and pass a 2-1/8" ball
- Bead blast finish bowl interior

Toilet shall be siphon jet type, requiring 35 PSI minimum flushing pressure. Model shall meet the requirements of ASME A112.19.3/ CSA B45.4.

Fixture shall withstand loadings of 5,000 lbs. without permanent damage.

Anchoring shall be by standard 6-point system (4 in the wall and 2 in the floor): threaded rods, nuts and washers shall be furnished for walls up to 8" thick. Floor anchoring hardware by others.

Unit shall require chase area for installation and maintenance.

On back to back fixture installations, do not use standard cross type waste fitting: cross flow may result due to blowout jet action. Use sanitary or off-set type waste fittings.

Note: For HET 1.28 GPF, unit will pass a 2" ball.

Willoughby Industries - *Security Products*

WILLOUGHBY

WRS-BF-FA Series
Front Mounted
Recessed Handicap
Shower Panel
w/ Hand Held Flexshower Head

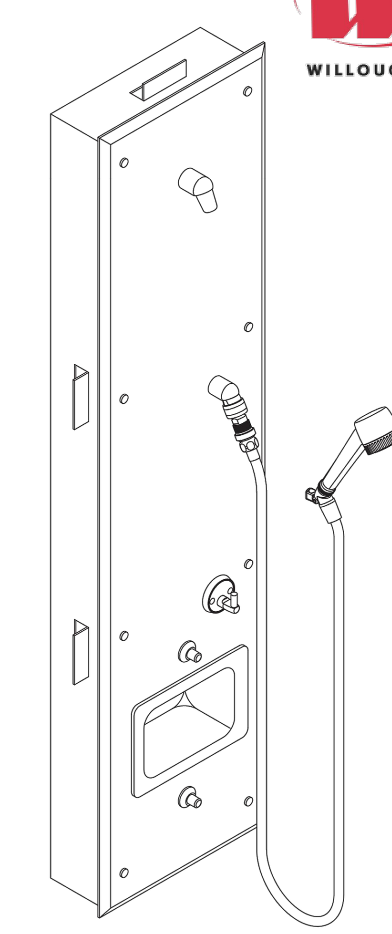

(Unit may be shown with optional features)

IN COMPLIANCE WITH A.D.A. 2010

To specify fixture and accessories, use the Model Number and Options page.
Example: To specify a Front Mounted, Recessed Handicap Shower Panel w/ Hand Held Flexshower Head with left hand controls, single temp. pneumatic metering valves(manifolded), standard pneumatic push buttons, standard 2.5 GPM flow rate, standard (NPS) and (FX) shower heads, in-line thermostatic mixing valve, and recessed mounted soap dish
Use the following Willoughby Model Number: **WRS-BF-FA-L-PML1-MA2-PPB-2.5GPM-NPS-FX-TMV-RD**

Recommended Specifications

Front Mounted, Recessed Handicap Shower Panel w/ Hand Held Flexshower Head shall be:
Willoughby Model No. **WRS-BF-FA**
(Select from model number and options list on next page)

Shower panel shall be fabricated from 14 gauge, Type 304 stainless steel with exposed stainless surfaces polished to a #4 satin finish. Mounting frame shall be fabricated from 18 gauge galvanized steel.

Standard equipment shall include:
- Shower valve (Select from Valve Selection options list)
- (NPS) non-adjustable penal shower head
- (FX) Hand held Flexshower head (w/ quick disconnect, vacuum breaker, and (1) hook)

Shower panel shall attach to mounting frame with vandal resistant stainless steel screws. Unit requires no chase area for installation and maintenance.

MODEL NUMBER AND OPTIONS:

1.) Outdoor Drinking Fountain Type:
❑ WODF-1WM Wall Mounted Outdoor Drinking Fountain

2.) Options:
❑ 316-1 316 Stainless Steel Body, Single
❑ SCV Seasonal Bowl Cover (1)

3.) Colors (select one):
❑ SL Silver (Silvadillo)
❑ G Green
❑ R Red
❑ BL Blue
❑ O Orange
❑ V Violet
❑ Y Yellow
❑ BR Brown
❑ BK Black
❑ BE Beige
❑ W White

Approved For Manufacturing By: ______________ Date: ________ Company: ______________
Wall Thickness: __________ Wall Type: ______________

IN COMPLIANCE WITH A.D.A. 2010

VERIFY ALL DIMENSIONS WITH FACTORY PRIOR TO ROUGH-IN
WILLOUGHBY RESERVES THE RIGHT TO MAKE CHANGES IN DESIGN AND DIMENSIONS WITHOUT FORMAL NOTICE AND WITHOUT INCURRING OBLIGATION.

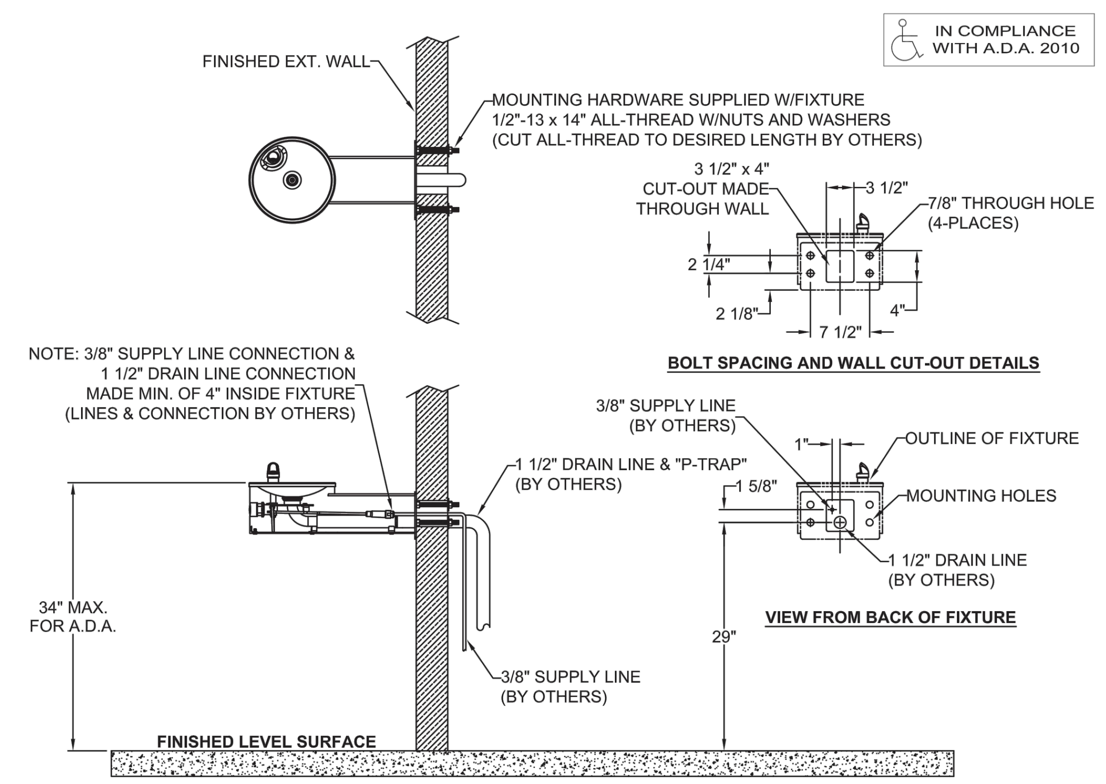

MODEL NUMBER AND OPTIONS:

1.) Base Model Number:
❑ ETWS-1490-FM Wall Outlet, Floor Mounted, Siphon Jet Series Toilet

2.) Inlet Location:
❑ BS Back Spud
❑ TS Top Spud

3.) Toilet Seat Height:
❑ 15" Seat Height (Standard)
❑ HC 18" Seat Height, Handicap-ADA Compliant

4.) Flush Valve GPF (Must Specify):
❑ 1.28 GPF HET
❑ 1.6 GPF ULF (Standard)
❑ 3.5 GPF (3" waste tube required)

5.) Toilet Waste:
❑ TWE Toilet Waste Extension (Standard)
❑ TW3 3" Clean-out for (TWE)
❑ TW5 4" Clean-out for (TWE)
❑ GWC Gasketed Waste Connection
❑ WO3 3" Toilet 'P' Trap (3.5 GPF Only)
❑ PC3 Pinned Clean-out Plug PVC-3"
❑ PCB3 Pinned Clean-out Plug Brass-3"
❑ PC4 Pinned Clean-out Plug PVC-4"
❑ PCB4 Pinned Clean-out Plug Brass-4"
❑ COH4 4" Clean-out Hook, 4" PVC Plug

6.) Waste Coupling for (TWE) Toilet Waste Extension:
❑ TWC3P Connecting to 3" PVC
❑ TWC3C Connecting to 3" Cast Iron
❑ TWC4P Connecting to 4" PVC
❑ TWC4C Connecting to 4" Cast Iron

7.) Other Options:
❑ T4 Manual Reset Toilet Overflow Preventer, Requires: (FV) Hydraulic Flush Valve and Accessible Chase
❑ T4A Auto Reset Toilet Overflow Preventer, Requires: (FV) Hydraulic Flush Valve and Accessible Chase
❑ ET4 Electronic Toilet Overflow Preventer*, Requires (EFV), Accessible Chase, & (WUCC-3010) or (WMSII) control
❑ FV Hydraulic Flush Valve (Includes Actuator)
❑ EFV Electronic Flush Valve (Pick Control)*
❑ EFVP Electronic Flush Valve w/ (PZPB) Piezo Push Button (Pick Control)*
❑ TFE Toilet Flush Extension
❑ FVT Flush Valve Connection (Back Spud Only)
❑ ASFVC Flush Valve Cover (Ligature-resistant, Top Spud Only)
❑ ASFVCADA Ligature-resistant ADA Flush Valve Cover (Top Spud Only)
❑ AP Flush Valve Access Panel (Allows access to chase mounted flush valve from fixture side)
❑ HS Hinged White Plastic Seat (No Cover, not recommended for Maximum Security/Ligature-resistant use)
❑ DC Decorator Color (Fixture exterior only - White)
❑ TF24H Hard-wired Transformer, 110VAC to 24VAC*
❑ TF24P Plug-in Transformer, 110VAC to 24VAC*
❑ HPS High Polish Seat
❑ MT Wall Template
❑ WS Wall Sleeve (Requires Accessible Chase)
❑ TSC Toilet Shipping Cover
❑ RTH1 Wall Mounted Recessed Tissue Holder (Rear Mounted, Requires Accessible Chase)
❑ RTH2 Wall Mounted Recessed Tissue Holder (Front Mounted, 4-1/2" Depth)
❑ Other ______________

8.) Electronic Controls* (Must Use Electronic Flush Valve):
❑ WUFC-4000 ❑ Pneutronic ❑ WMSII
❑ WUCC-3010 (Select WUCC-3010 Control if pairing a Toilet with a Lavatory or if the Toilet is selected with an (ET4) overflow option)

*(Req. 110V power through ground fault interrupter (GFCI) receptacle)

Approved For Manufacturing By: ______________ Date: ________ Company: ______________
Wall Thickness: __________ Wall Type: ______________

VERIFY ALL DIMENSIONS WITH FACTORY PRIOR TO ROUGH-IN
WILLOUGHBY RESERVES THE RIGHT TO MAKE CHANGES IN DESIGN AND DIMENSIONS WITHOUT FORMAL NOTICE AND WITHOUT INCURRING OBLIGATION.

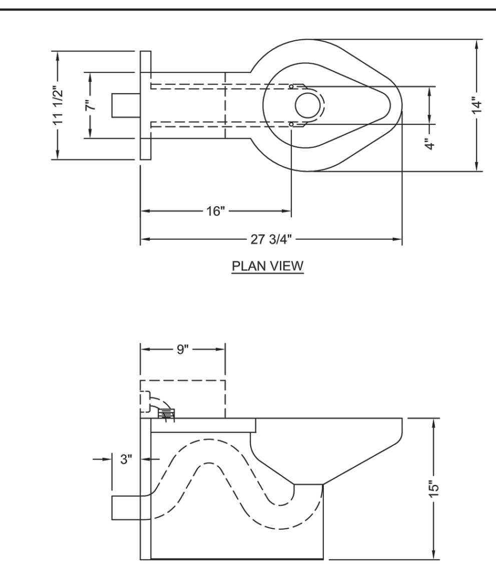

1.6 GPF VERSION SHOWN, 3.5 AND 1.28 MAY VARY IN SIZE.

MODEL NUMBER AND OPTIONS:

1.) Base Model Number:
❑ WRS-BF-FA Front Mounted, Recessed Handicap Shower Panel w/ Hand Held Flexshower Head

2.) Panel Orientation (Must Specify):
❑ L Left Hand Controls
❑ R Right Hand Controls

3.) Valve Selection:
❑ NV No Valve
❑ PML1 Single Temp. Pneumatic Metering
❑ PML2 Dual Temp. Pneumatic Metering
❑ E1L1 Single Temp. Electronic (Pick Control)*
❑ E1L2 Dual Temp. Electronic (Pick Control)*

Valve Manifold Option:
Pneumatic or Electronic Valves Only:
(See the Manifold Option Page at the end of Catalog Section S5 for further information)
❑ MA2

4.) Push Button Selection:
Pneumatic or Electronic Valves Only:
❑ PPB Pneumatic Push Buttons
❑ EPB Electronic Push Buttons*
❑ PZPB Piezo Push Buttons*

5.) Flow Rates:
❑ 2.5 GPM (Standard)
❑ 2.0 GPM
❑ 1.5 GPM

6.) Electronic Controls* (Must Use Electronic Push Button):
❑ WUSC-2200 ❑ WUSC-2400 ❑ Pneutronic ❑ WMS II

7.) Shower Head Selection:
❑ NPS Non-adjustable Penal Shower Head (Standard)
❑ FX Hand Held Flexshower w/ Quick Disconnect and Vacuum Breaker (Standard)
❑ APS Adjustable Penal Shower Head

8.) Options:
❑ TMV In-line Thermostatic Mixing Valve
❑ TF24H Hard-wired Transformer, 110VAC to 24VAC*
❑ TF24P Plug-in Transformer, 110VAC to 24VAC*
❑ RD Recessed Mounted Soap Dish
❑ SD Surface Mounted Soap Dish
❑ Other ______________
❑ Other ______________
*(Req. 110V power through ground fault interrupter (GFCI) receptacle)

Approved For Manufacturing By: ______________ Date: ________ Company: ______________
Wall Thickness: __________ Wall Type: ______________

LEFT HAND CONTROL FIXTURE SHOWN
(RIGHT HAND FIXTURE IS SYMMETRICALLY OPPOSITE)

IN COMPLIANCE WITH A.D.A. 2010

VERIFY ALL DIMENSIONS WITH FACTORY PRIOR TO ROUGH-IN
WILLOUGHBY RESERVES THE RIGHT TO MAKE CHANGES IN DESIGN AND DIMENSIONS WITHOUT FORMAL NOTICE AND WITHOUT INCURRING OBLIGATION.

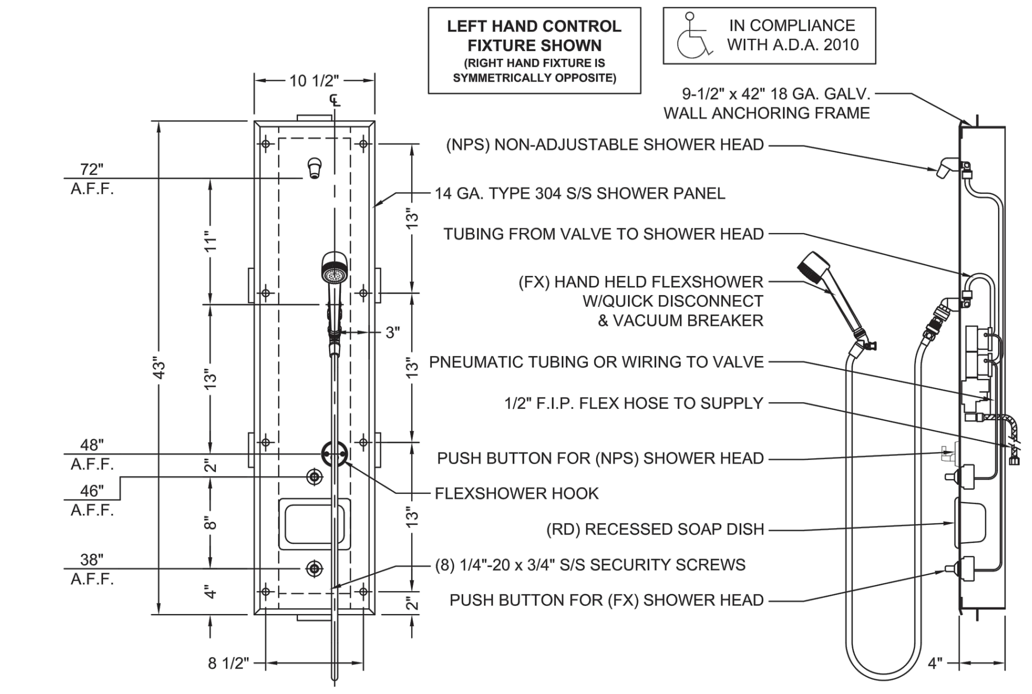

GALVESTON COUNTY
BEACH PAVILION
CRYSTAL BEACH, TX 77650
BE-Arc LLC Project No : C-13-007.01

ibis Engineering
REG # F-11156
P.O. Box 55171
Galveston, Texas 77555
PH 409.621.6740
THIS PRINT IS THE PROPERTY OF IBIS ENGINEERING IT MUST NOT BE TRACED OR REPRODUCED IN ANY MANNER NOR SHALL IT BE SUBMITTED WITHOUT PRIOR WRITTEN CONSENT FROM IBIS ENGINEERING.

B R A X E A S T E R W O O D
D E S I G N
2728 AVENUE Q SUITE 2
GALVESTON TEXAS 77550
PHONE 409-354-8976
EASTERWOOD@BEAIA.COM

FOR PERMIT

DATE	REVISION

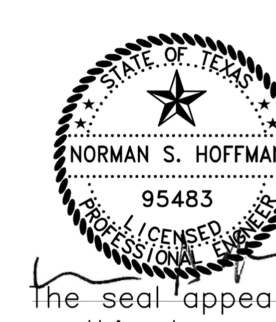

The seal appearing on this document was authorized by NORMAN HOFFMAN P.E. 95483 12/7/2017

DESIGN DEVELOPMENT

DATE ISSUED:
12/7/2017

COPYRIGHT 2017

P2.4

Willoughby Industries - *Commercial Ware*

ES-1015-HC
Handicap
Stainless Steel
Commercial Lavatory

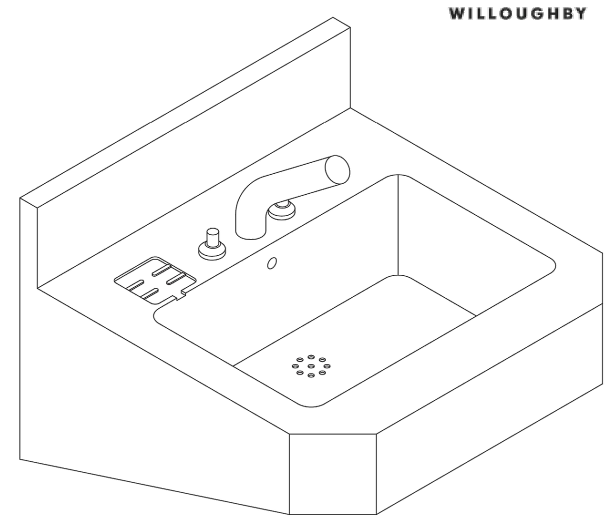

IN COMPLIANCE WITH A.D.A. 2010

(Unit may be shown with optional features)

To specify fixture and accessories, use the Model Number and Options page.

Example: To specify a Handicap Stainless Steel Commercial Lavatory with deck mounted spout, dual temp. pneumatic metering valves, standard pneumatic push buttons, standard lav. overflow vent, and chrome plated removable 'P' trap

Use the following Willoughby Model Number:
ES-1015-HC-DMS-PML2-PPB-OV-TT

Recommended Specifications

Handicap Stainless Steel Commercial Lavatory shall be:
Willoughby Model No. **ES-1015-HC**
(select from model number and options list on next page)

Fixture shall be fabricated from 16 gauge, Type 304 stainless steel. The construction is all-welded with exposed stainless surfaces polished to a #3 satin finish.

Standard lavatory shall include:
- Rectangular-shaped bowl, 14-1/2" x 9-1/2" x 4-3/8" deep
- Fast drain with overflow vent
- 4" long, Ø1-1/2" tailpiece
- Self-draining soap dish

Mounting:
Anchoring shall be from the front with Z-clip and anchoring holes provided. Anchoring hardware by others. Wall requires adequate backing to support lavatory. Unit requires no chase area for installation and maintenance.

ADA, TAS, and ANSI Compliant:
When the lavatory is mounted at the standard 34" adult rim height, it complies with applicable ADA, TAS, and ANSI Z124.3 and Z124.6 accessibility guidelines.

Note: Plug-in transformer must be used with a ground fault interrupter (GFCI) receptacle to prevent possible electrical shock.

Willoughby Industries - *Security Products*

UW-1317-HEU
Single Person
Rear Mounted
ADA-Compliant
Contoured
Washout Flush
High Efficiency Urinal

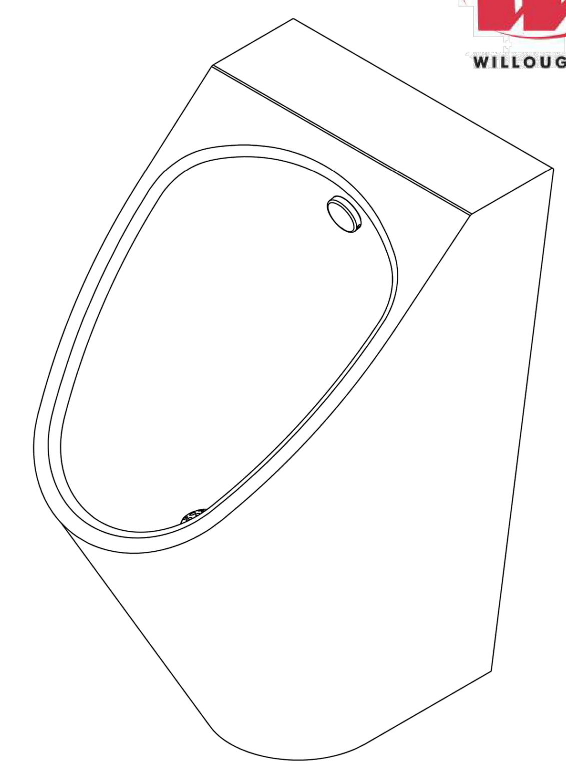

IN COMPLIANCE WITH A.D.A. 2010

(Unit may be shown with optional features)

To specify fixture and accessories, use the Model Number and Options page.

Example: To specify a Single Person, Rear Mounted, ADA-Compliant, Contoured, Washout Flush, High Efficiency Urinal with back spud, 1/8 GPF, wall sleeve, and hydraulic flush valve

Use the following Willoughby Model Number:
UW-1317-HEU-BS-0.125-WS-FV

Recommended Specifications

Single Person, Rear Mounted, ADA-Compliant, Contoured, Washout Flush, High Efficiency Urinal shall be:
Willoughby Model No. **UW-1317-HEU**
(Select from model number and options list on next page)

Fixture is fabricated from all 16 GA., Type 304 stainless steel. The construction shall be all-welded with exposed stainless steel surfaces polished to a satin finish. Contoured interior and exterior surfaces for ease of cleaning.

Standard equipment shall include:
- Machined stainless steel flush nozzle
- Beehive strainer
- Removable P-trap with 1-1/2" F.I.P. waste connection
- 3/4" N.P.T. male inlet connection

High Efficiency Urinal shall be washout type requiring 1/8 to 1/2 GPF flush valve and 25 PSI minimum flushing pressure. Trap shall be fully enclosed and maintain a 3" seal.

Anchoring shall be by a standard 4-point system: threaded rods, nuts and washers furnished for walls up to 8" thick.

Unit requires chase area for installation and maintenance.

Urinals mounted at 17" rim height to comply with ANSI, ADA and UFAS accessibility requirements. Please consult local code as compliance is subject to the interpretation and requirements of the local code authority.

COUNTY APPROVAL:
SIGNATURE ______________________________ DATE______________

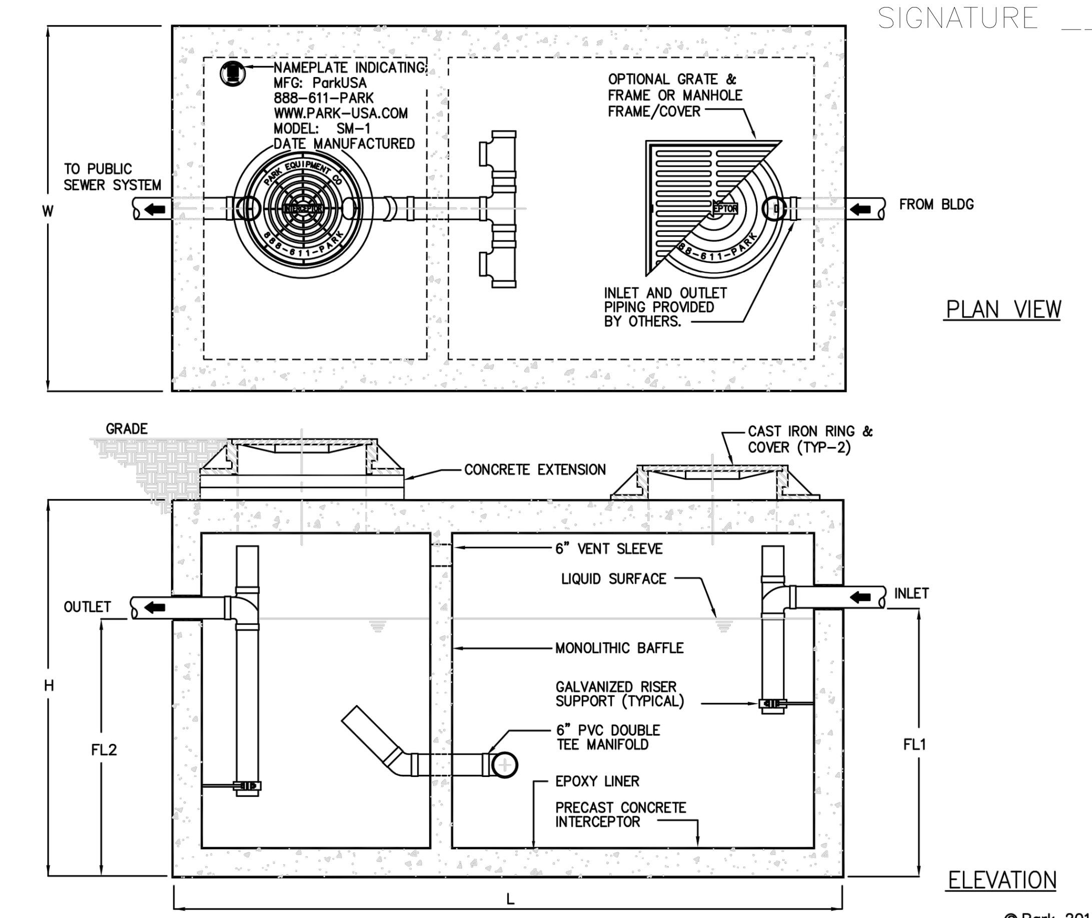

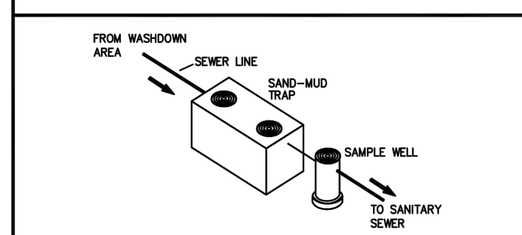

Typical applications include commercial and industrial laundry facilities where excessive sand & mud may interfere with the proper drainage of the sewer system. The sand-mud interceptor is generally buried below grade for gravity flow sewer systems. A sample well is utilized on the outlet side for sampling by the local water authoritiy.

Specifications

CONCRETE : Class II concrete with design strength of 4500 PSI at 28 days. Unit is of monolithic construction at floor, first stage of wall and baffle with sectional riser to required depth. (Monolithic baffle required, slide-in type is not acceptable)

REINFORCEMENT: Grade 60 reinforced with steel rebar conforming to ASTM A615 on required centers or equal.

C.I. CASTINGS: Manhole frames, covers or grates are manufactured of grey cast iron conforming to ASTM A48-76 Class 30. Manhole shall be nominal 24 inch diameter and be traffic duty.

SAND-MUD INTERCEPTOR SCHEDULE

MODEL NO.	CAPACITY USGal	EMPTY WT (LBS)	LENGTH L	WIDTH W	HEIGHT H	INLET FL1	OUTLET FL2
SM-500	500	9,500	7'-10"	4'-4"	4'-6"	3'-3"	3'-0"
SM-750	750	9,900	7'-10"	4'-4"	6'-0"	4'-5"	4'-2"
SM-1000	1,000	13,350	8'-8"	5'-0"	6'-0"	4'-9"	4'-6"
SM-1250	1,250	14,650	9'-2"	5'-8"	6'-0"	4'-9"	4'-6"
SM-1500	1,500	16,050	9'-2"	5'-8"	7'-0"	5'-9"	5'-6"
SM-2000	2,000	21,250	9'-0"	6'-0"	8'-0"	6'-9"	6'-6"
SM-2500	2,500	27,050	13'-0"	7'-0"	7'-0"	5'-9"	5'-6"
SM-3000	3,000	33,150	13'-0"	7'-0"	8'-0"	6'-9"	6'-6"
SM-3500	3,500	38,550	13'-0"	7'-0"	8'-6"	7'-3"	7'-0"
SM-4000	4,000	38,100	16'-0"	8'-6"	7'-0"	5'-9"	5'-6"

OTHER SIZES ARE AVAILABLE. CONTACT US FOR MORE INFORMATION

Engineering Data

The sand & mud interceptor is structurally & hydraulically engineered to conform to regional plumbing codes recommended in most cities. Consult with local authorities for specific application requirements.

Shop drawings shall include complete structural & bouyancy calculations certified by a licensed professional engineer.

Consult with Park Environmental for exact excavation dimensions & shipping information.

888.611.7275
www.park-usa.com
PARK USA Design for Water

SAND-MUD INTERCEPTOR MODEL SM - 500 THRU 4000 GALLONS		
SCALE NONE	DWG. NO. SM-1	REV. A
DATE 2012		

MODEL NUMBER AND OPTIONS:

1.) Lavatory Model:
❑ ES-1015-HC 18" Handicap Stainless Steel Commercial Lavatory

2.) Spout/Bubbler Selection:
❑ DMS Deck Mounted Spout
❑ DMBH Deck Mounted Hemispherical Bubbler

3.) Valve Selection:
❑ NV No Valve, No Spout / Bubbler- Faucet by Others (Select Hole Punching if needed)
❑ PSL1 Single Temp. Pneumatic Non-metering
❑ PSL2 Dual Temp. Pneumatic Non-metering
❑ PML1 Single Temp. Pneumatic Metering
❑ PML2 Dual Temp. Pneumatic Metering
❑ E1L1 Single Temp. Electronic (w/ Pneutronic Control)*
❑ E1L2 Dual Temp. Electronic (w/ Pneutronic Control)*

4.) Valve Actuation:
❑ PPB Pneumatic Push Buttons
❑ PBH Ligature-resistant Pneumatic Push Buttons
❑ EPB Electronic Push Buttons*
❑ EPBH Ligature-resistant Electronic Push Buttons*
❑ PZPB Piezo Electronic Push Buttons*

5.) Hole Punching Selection (Faucet by Others):
❑ 4CC 4" Centerset, Ø1" Holes (Specify 2 or 3 holes:___)
❑ 8CC 8" Centerset, Ø1" Holes (Specify 2 or 3 holes:___)
❑ 1CC Center Shank, (1) Ø1" Hole
❑ SP Special Punching (Specify hole punching dim.) SP: ____________

6.) Lavatory Waste Options:
❑ TT Chrome Plated Removable 'P' Trap
❑ TE Trap Enclosure
❑ OV Overflow Vent (Standard)

7.) Other Options:
❑ TMV In-line Thermostatic Mixing Valve
❑ DC Decorator Color (Fixture exterior only - White)
❑ TF24H Hard-wired Transformer, 110VAC to 24VAC* (Standard)
❑ TF24P Plug-in Transformer, 110VAC to 24VAC*
❑ Other ____________
❑ Other ____________

8.) Electronic Controls* (Must Use Electronic Push Button):
❑ WUCC-3010 ❑ Pneutronic
(The WUCC-3010 Control can be used to pair a Lavatory with a Toilet)
*(Req. 110V power through ground fault interrupter (GFCI) receptacle)

Approved For Manufacturing By: ____________ Date: ________ Company: ____________
Wall Thickness: ____________ Wall Type: ____________

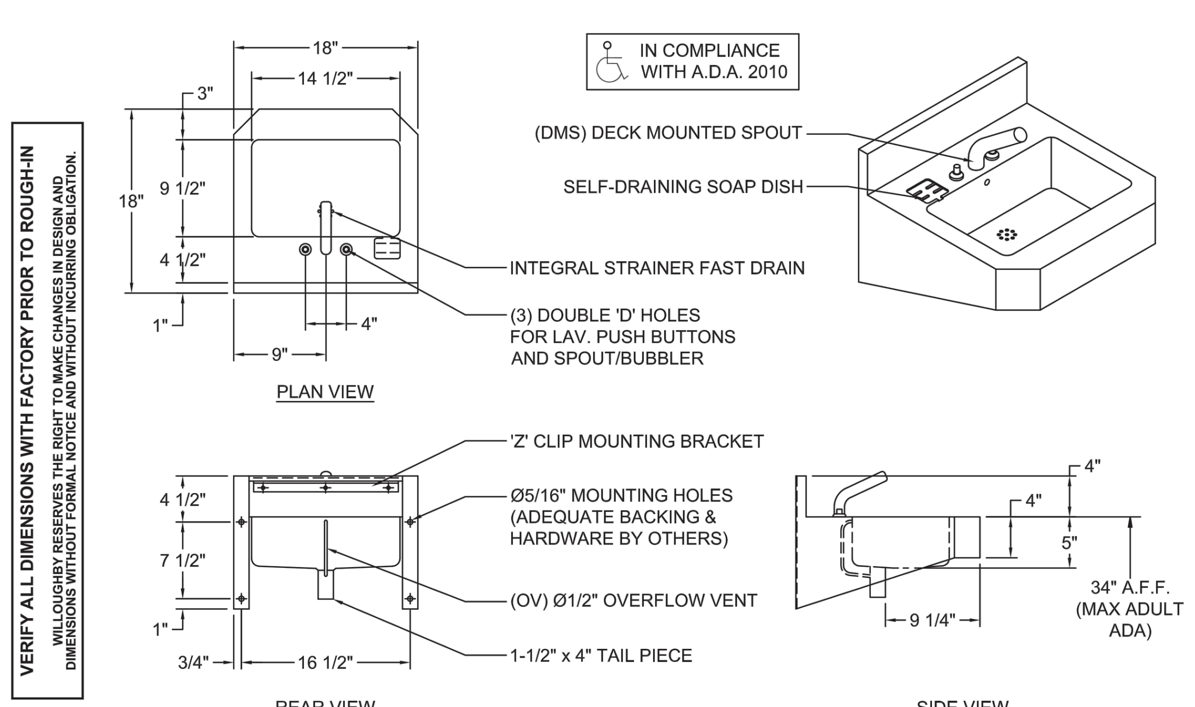

MODEL NUMBER AND OPTIONS:

1.) Base Model Number:
❑ UW-1317-HEU Single Person, Rear Mounted, ADA-Compliant, Contoured, Washout Flush, High Efficiency Urinal

2.) Inlet Location:
❑ BS Back Spud
❑ TS Top Spud

3.) Flush Valve GPF (Must Specify):
❑ 0.5 GPF High Efficiency (HEU)
❑ 0.125 GPF High Efficiency (HEU)

4.) Options:
❑ MT Wall Template
❑ WS Wall Sleeve (Requires Accessible Chase)
❑ FV Hydraulic Flush Valve (Includes Actuator)
❑ EFV Electronic Flush Valve (Pick Control)*
❑ EFVP Electronic Flush Valve w/ (PZPB) Piezo Push Button (Pick Control)*
❑ ASUFVC Ligature-resistant Urinal Flush Valve Cover (Top Spud Only)
❑ AP Flush Valve Access Panel (Allows access to chase mounted flush valve from fixture side)
❑ TF24H Hard-wired Transformer, 110VAC to 24VAC*
❑ TF24P Plug-in Transformer, 110VAC to 24VAC*
❑ DC Decorator Color (Fixture exterior only - White)
❑ Other ____________
❑ Other ____________

5.) Electronic Controls* (Must Use Electronic Flush Valve):
❑ WUFC-4000 ❑ Pneutronic ❑ WMSII
*(Req. 110V power through ground fault interrupter (GFCI) receptacle)

Approved For Manufacturing By: ____________ Date: ________ Company: ____________
Wall Thickness: ____________ Wall Type: ____________

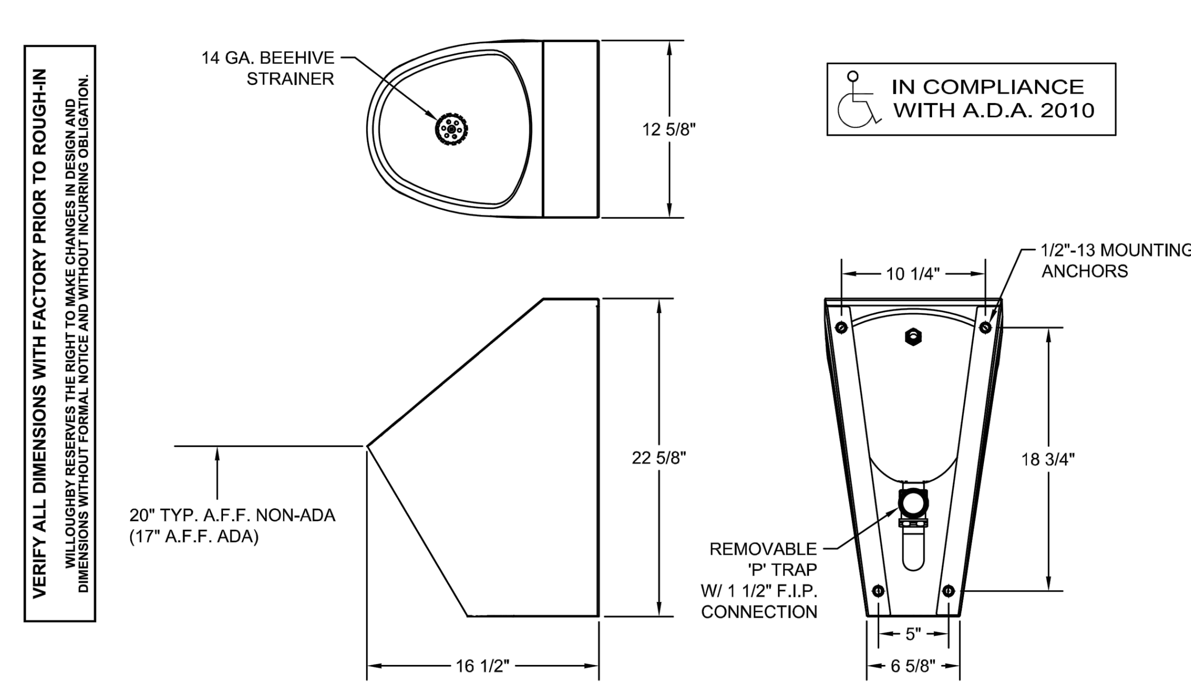

STATE OF TEXAS
NORMAN S. HOFFMAN
95483
LICENSED PROFESSIONAL ENGINEER

The seal appearing on this document was authorized by NORMAN HOFFMAN P.E. 95483 12/7/2017

GALVESTON COUNTY
BEACH PAVILION
CRYSTAL BEACH, TX 77650
BE-Arc LLC Project No : C-13-007.01

ibis Engineering
REG # F-11156
P.O. Box 55171
Galveston, Texas 77555
PH 409.621.6740
THIS PRINT IS THE PROPERTY OF IBIS ENGINEERING IT MUST NOT BE TRACED OR REPRODUCED IN ANY MANNER NOR SHALL IT BE SUBMITTED WITHOUT PRIOR WRITTEN CONSENT FROM IBIS ENGINEERING.

BRAX EASTERWOOD
DESIGN
2728 AVENUE Q SUITE 2
GALVESTON TEXAS 77550
PHONE 409-354-8976
EASTERWOOD@BEAIA.COM

FOR PERMIT

DATE	REVISION

DESIGN DEVELOPMENT

DATE ISSUED:
12/7/2017

COPYRIGHT 2017

P2.5

PLUMBING LEGEND

SYMBOL	DESCRIPTION
——SAN——	SANITARY OR WASTE PIPING ABOVE GRADE (SAN)
——SAN——	SANITARY OR WASTE PIPING BELOW GRADE (SAN)
—— GW ——	GREASE WASTE PIPING ABOVE GRADE (GW)
—— GW ——	GREASE PIPING BELOW GRADE (GW)
— — — — —	VENT PIPING ABOVE OR BELOW GRADE (V)
—— SD ——	STORM PIPING ABOVE GRADE (SD)
—— SD ——	STORM PIPING BELOW GRADE (SD)
——OFD——	OVERFLOW STORM PIPING ABOVE GRADE (OFD)
—— CW ——	COLD WATER PIPING (CW)
—— HW ——	HOT WATER PIPING (HW)
—— HWR ——	HOT WATER RETURN PIPING (HWR)
—— TW ——	TEMPERED WATER (TW)
—— TP ——	TRAP PRIMER LINE (TP)
—— FIRE ——	FIRE PROTECTION WATER PIPING (FIRE)
	FLOW DIRECTIONAL ARROW
	SHUT–OFF VALVE
	BALANCING VALVE (BV)
	SOLENOID VALVE (SV)
	BALL VALVE (BV)
	BUTTERFLY VALVE
	GAS PLUG VALVE (GPV)
	HORIZONTAL SWING CHECK
	UNION
	Y–STRAINER
	REDUCER OR INCREASER
	ECCENTRIC REDUCER
	REDUCED PRESSURE BACKFLOW PREVENTER (RPZ)
	PIPING DOWN
	RISE OR DROP PIPING
	PIPING UP –OR– PIPING UP & DOWN
	CAP ON END OF PIPE
	CLEANOUT (WALL OR CEILING) (CO)
	FLOOR CLEANOUT (FCO)
	EXTERIOR CLEANOUT WITH 18"x18"x4" CONCRETE PAD (ECO)
	TWO–WAY CLEANOUT (PROVIDE 18"x24"x4" CONCRETE PAD OUTSIDE)
	PRESSURE REDUCING VALVE (PRV)
	BRANCH CONNECTION OUT OF TOP
	BRANCH CONNECTION OUT OF BOTTOM
	BRANCH CONNECTION OUT OF SIDE
	WYE & 1/8TH BEND BRANCH CONNECTION
	WYE BRANCH CONNECTION
	HOSE BIBB
	PRESSURE GAUGE WITH COCK
	THERMOMETER
	GAS PRESSURE REGULATOR
	TEST COCK
	GAS METER
	WALL HYDRANT
	VALVE IN RISE
	ASME TEMPERATURE & PRESSURE RELIEF VALVE
	VACUUM RELIEF VALVE
	ANGLE VALVE
1	REFER TO KEYED NOTE
	FLOOR SINK (FS)
	FLOOR DRAIN (FD)
	FLOOR DRAIN WITH P–TRAP (FD)
	FLOOR DRAIN WITH P–TRAP AT 45° ANGLE (FD)
	HUB DRAIN (HD)
	ACCESS PANEL FOR TRAP PRIMER
AP	ACCESS PANEL LOCATION SYMBOL
	SHOCK ABSORBER WITH ACCESS PANEL
	AIR CHAMBER
	EXISTING
	NEW
	CONNECT NEW TO EXISTING
	INVERT ELEVATION
	QUARTER OF AN INCH SLOPE
	1/8TH OF AN INCH SLOPE
	1/16TH OF AN INCH SLOPE
	DELTA CHANGE SYMBOL
	RISER FLAG

NOTE: NOT ALL SYMBOLS MAY APPLY TO THIS PROJECT.

PLUMBING GENERAL NOTES

1. REFER TO CIVIL DRAWINGS FOR CONTINUATION OF DOMESTIC WATER, FIRE PROTECTION WATER, AND SANITARY WASTE UTILITIES.
2. REFER TO CIVIL DRAWINGS FOR SIZE AND LOCATION OF DOMESTIC WATER METER ON SITE.
3. REFER TO ARCHITECTURAL/CIVIL DRAWINGS FOR BUILDING FINISHED FLOOR ELEVATION.
4. FIELD VERIFY EXACT LOCATION, SIZE, DEPTH, DIRECTION OF FLOW, CAPACITY, PIPE MATERIAL AND CONDITION OF EXISTING SITE DOMESTIC WATER, FIRE PROTECTION WATER, AND SANITARY WASTE PIPING PRIOR TO BEGINNING CONSTRUCTION TO ENSURE THAT PROPER CONNECTIONS TO AND EXTENSION OF SUCH UTILITIES CAN BE MADE.
5. INVERT ELEVATIONS LISTED ARE APPROXIMATE. PRIOR TO CONSTRUCTION, COORDINATE FINAL INVERT ELEVATIONS OF BUILDING SANITARY OUTFALLS AND SITE PIPING WITH SITE UTILITY CONTRACTOR. MAKE ADJUSTMENTS AS REQUIRED TO ENSURE PROPER CONNECTIONS TO SITE UTILITIES.
6. PRIOR TO BEGINNING CONSTRUCTION, COORDINATE PLUMBING BACKFLOW PREVENTION REQUIREMENTS WITH THE LOCAL CODE AUTHORITY AND PROVIDE AS DIRECTED.
7. CONTRACTOR SHALL COORDINATE ROUTING OF PIPING BELOW SLAB WITH COLUMN FOOTINGS, GRADE BEAMS, UNDERGROUND PLUMBING AND ELECTRICAL UTILITIES, AND OTHER SUB–SURFACE BUILDING ELEMENTS.
8. CONTRACTOR SHALL COORDINATE ROUTING OF PIPING IN CEILING SPACES WITH MECHANICAL AND ELECTRICAL EQUIPMENT, DUCTWORK AND CONDUIT. SHOULD A CONFLICT OCCUR THE CONTRACTOR SHALL NOTIFY THE ARCHITECT/ENGINEER PRIOR TO INSTALLING AN ALTERNATE PIPING PLAN.
9. MAINTAIN MINIMUM 15'–0" DISTANCE BETWEEN VENT TERMINALS THROUGH ROOF AND ALL FRESH AIR INTAKES.
10. COORDINATE ALL FIXTURE AND EQUIPMENT LOCATIONS AND CONNECTION REQUIREMENTS WITH LATEST ARCHITECTURAL DRAWINGS, SPECIFICATIONS, AND MANUFACTURER RECOMMENDATIONS PRIOR TO ANY ROUGH–INS.
11. DO NOT ROUGH–IN FROM THESE DRAWINGS. REFER TO LATEST ARCHITECTURAL DRAWINGS FOR DIMENSIONED LOCATIONS.
12. CONTRACTOR TO COORDINATE ALL WORK WITH THE WORK OF OTHER TRADES TO AVOID CONFLICTS AND TO MINIMIZE INTERRUPTION OF SERVICES.
13. ALL WORK, METHODS AND INSTALLATIONS INVOLVED IN THE PLUMBING DESIGN SHALL BE IN ACCORDANCE WITH THE CITY BUILDING CODE AND INSPECTION REGULATIONS AND ALL OTHER OFFICIALS HAVING JURISDICTION.
14. UPON COMPLETION OF WORK, THOROUGHLY ROD OUT AND FLUSH ALL SANITARY PIPING TO ENSURE IT IS FREE FROM BLOCKAGES.

GENERAL CONDITIONS

1. ALL WORK SHALL BE INSTALLED IN ACCORDANCE WITH THE GOVERNING LOCAL, STATE, AND NATIONAL CODE AS THE MINIMUM REQUIREMENT WHETHER OR NOT SPECIFIED OF SHOWN ON DRAWINGS. DRAWINGS SHALL GOVERN WHERE A LARGER SIZE, QUANTITY, OR BETTER QUALITY IS SHOWN THAN IS REQUIRED BY CODE(S). AS USED IN THE FOLLOWING, "CONTRACTOR" SHALL MEAN THE CONTRACTOR INSTALLING WORK UNDER THIS DIVISION OF THE WORK.
2. DRAWINGS ARE DIAGRAMMATIC IN NATURE AND DO NOT SHOW EVERY REQUIRED MISCELLANEOUS DETAILS, SUPPORT, FITTINGS, ETC. FURNISH AND INSTALL ALL MATERIALS REQUIRED FOR A COMPLETE FUNCTIONING SYSTEM WHETHER OR NOT SHOWN ON THE DRAWINGS.
3. COORDINATE INSTALLATION WITH OTHER TRADES TO ASSURE INSTALLATION OF MATERIALS AND EQUIPMENT AS REQUIRED FOR THE PROPER SEQUENCE OF CONSTRUCTION. VERIFY AND INSTALL WITHIN INTENDED SPACE REQUIREMENTSWITH PROVISIONS FOR ACCESS FOR SERVICE AND REMOVAL.
4. CONTRACTOR SHALL INSPECT THE SITE AND BE INFORMED OF THE CONDITIONS AFFECTING THE WORK, NO ADDITIONAL ALLOWANCE WILL BE MADE BECAUSE OF FAILURE TO OBTAIN INFORMATION ON SITE CONDITIONS, COORDINATE THE WORK AS REQUIRED AND DIRECTED BY LOCAL UTILITY COMPANIES STANDARDS.
5. ALL WORK SHALL BE INSTALLED IN THE FIRST CLASS MANNER CONSISTENT WITH INDUSTRY STANDARDS. MATERIALS OR EQUIPMENT WHICH DO NOT PRESENT A READONABLY NEAT OR WORKMANLIKE APPEARANCE MAY BE DIRECTED BY THE ARCHITECT TO BE REMOVED AND REPLACED AT NO ADDITIONAL COST.
6. FURNISH 6 COPIES OR BROCHURES/SHOP DRAWINGS FOR APPROVAL PRIOR TO STARTING WORK. AT PROJECT CLOSEOUT, PROVIDE THREE COPIES OPERATING MANUALS, THREE COPIES OF "AS–BUILT" RECORD DRAWINGS, AND INSTRUCT OWNER IN THE OPERATION OF ALL EQUIPMENT.
7. ALL MISCELLANEOUS WORK SUCH AS EXCAVATION BACKFILL, CONCRETE, PADS, SLEEVES, ETC. REQUIRED TO PERFORM WORK UNDER THE DIVISION SHALL BE FURNISHED AND INSTALLED BY THE CONTRACTOR OR THIS DIVISION OF WORK. OBTAIN AND PAY FOR ALL REQUIRED LICENSES, PERMITS, AND CERTIFICATES REQUIRED FOR WORK UNDER THIS SECTION.
8. ALL WORK SHALL BE GUARENTEED AGAINST DEFECTS IN MATERIALS AND WORKMANSHIP FOR A PERIOD OF (1) YEAR BEYOND FINAL ACCEPTANCE IN A FORM ACCEPTABLE TO THE ARCHITECT. GUARANTEE SHALL INCLUDE CORRECTIONS OR REPLACEMENT OF DAMAGE OR REPLACEMENT TO OTHER'S WORK OR MATERIALS CAUSED BY WORK UNDER THIS DIVISION.

REQUIREMENTS

1. PLUMBING CONTRACTOR SHALL FURNISH AND INSTALL ALL HOT AND COLD WATER PIPING SYSTEMS, DRAINAGE, WASTE, AND VENT PIPING SYSTEMS, FIXTURES AND HARDWARE, AND WATER HEATERS INSTALLED DIELECTRIC UNIONS AT ALL DISSINILIR METAL CONNECTIONS.
2. PROVIDE 1 SET OF AIR CHAMBERS AT ALL WATER CLOSET TANKS, BACK FLOW PREVENTORS SHALL BE PROVIDED WHERE SHOWN ON THE DRAWINGS AND AS REQUIRED BY CODE.
3. CUTOFF VALVES, STOPS, SHALL BE PROVIDED WHERE SHOWN ON DRAWINGS AND AT ALL FIXTURE CONNECTIONS. CLEAN OUTS SHALL BE PROVIDED AS REQUIRED BY CODE AND AS SHOWN ON THE DRAWINGS.
4. CONDENSATE DRAIN LINES SHALL BE MINIMUM 3/4", WITH TRAP, INSULATE 1ST 10'–0" OF CONDENSATE DRAIN WITH 1/2" INSULATION.
5. TEST ALL WATER SYSTEMS IN PRESENCE OF OWNER'S REPRESENTATIVE AT MINIMUM 100 PSIG FOR 8 HOURS. SANITARY, WASTE AND VENTS SHALL BE TESTED WITH 10'–0" HEAD OF WATER FOR 8 HOURS WITH LEVEL OF WATER TO REMAIN UNCHANGED.
6. INSTALL ALL PIPING SYSTEMS SO THAT THEY WILL NOT BE SUBJECT TO ANY UNDUE STRAINS OR STRESSES AND PROVISIONS SHALL BE MADE FOR THE EXPANSION, AND CONTRACTION, AND STRUCTURAL SETTLEMENT. INSTALL A MINIMUM 6" SAND FILL AROUND ALL UNDERGROUND PIPES.
7. SANITIZE/FLUSH DOMESTIC WATER SYSTEM PER STATE STANDARDS. CHECK WATER PRESSURE AVAILABLE AT SITE AND INSTALL PRESSURE REDUCER IF REQUIRED TO LIMIT 80PSI AT BUILDING ENTRANCE.
8. ALL WATER PIPING AND TRAPS IN EXTERIOR WALLS AND IN PLENUM SPACE SHALL BE INSULATED WITH MIN. 1" ARMFLEX VAPOR SHIELD INSULATION.
9. CONFIRM ALL TRAPS ARE FULL OF WATER AFTER INSTALLATION.
10. ALL PENETRATIONS THROUGH FIRE RATED WALLS AND FLOOR CEILING ASSEMBLIES SHALL BE INSTALLED AND SEALED TO MAINTAIN FIRE RATING WITH U.L. LISTED ASSEMBLIES, MATERIALS, AND SEALANTS. VERIFY ACTUAL REQUIREMENTS WITH LOCAL BUILDING OFFICIALS.
11. UNIONS SHALL BE INSTALLED IN THE WATER SUPPLY PIPING WITHIN 12" OF REGULATING EQUIPMENT, WATER HEATER, CONDITIONING AND SIMILIAR EQUIPMENT WHICH MAY REQUIRE SERVICE BY REMOVAL OR REPLACEMENT IN A MANNER WHICH WILL FACILITATE ITS READY REMOVAL.
12. USE PROSET FIRESTOP WASHER/REFRIGERATOR BOX DESIGN PS/PV 120–08 IN RATED WALLS.
13. WATER PIPING INSDE THE BUILDING SHALL BE SEAMLESS ASTM B 88 TYPE L COPPER WATER TUBE WROUGHT COPPER FITTINGS, ANSI B16.22. SOLDER MATERIAL SHALL BE 95.5% LEAD FREE, ASTM B 32. THE USE OF DRILLED–T CONNECTIONS IS NOT PERMITTED.

    WATER PIPING BELOW SLAB SHALL BE ASTM B 88 TYPE K COPPER WATER TUBE WITH WROUGHT COPPER FITTINGS, ANSI B16.22. ALL JOINTS SHALL BE BRAZED.
14. DRAIN, WASTE, PIPING, AND FITTINGS SHALL BE SCHEDULE 40 POLYVINYL CHLORIDE CONFORMING TO ASTM D–2665 WITH SOLVENT WELDED JOINTS.
15. VENT PIPING SHALL BE CAST IRON. DRAIN PIPING IN PLENUM SHALL BE CAST IRON OR COPPER.

THERMOSTATIC MIXING VALVES

ITEM NO.	INLET HOT WATER TEMP (°F)	OUTLET MIXED TEMP (°F)	MINIMUM FLOW (GPM)	DESIGN FLOW (GPM)	PRESSURE DROP @ DESIGN FLOW (PSI)	VALVE FINISH	MANUFACTURER / MODEL NO.
TMV–1	140°	110°	0.5	4	5.0	ROUGH BRONZE	SYMMONS THERMIXER 7–120–CKX
TMV–2	140°	110°	–	7	5.0	ROUGH BRONZE	SPEAKMAN SE–370

NOTES:
1. MAKE WATER CONNECTIONS TO THERMOSTATIC MIXING VALVE(S) IN ACCORDANCE WITH THE MANUFACTURER'S RECOMMENDATIONS.
2. PROVIDE PIPE INCREASERS AND/OR VALVES AS REQUIRED.

WATER HAMMER DAMPERS

SYMBOL / SIZE	FIXTURE UNITS	CHAMBER LENGTH	SWEAT CONNECTION
A	1–11	8–1/4"	1/2"

NOTES
1. SOUIX CHIEF HYDRA–RESTER 650 SERIES WATER HAMMER ARRESTER

COUNTY APPROVAL:
SIGNATURE ______________________ DATE____________

FIXTURE VENTS
2009 IPC, TABLE 906.1
DISTANCE OF FIXTURE TRAP FROM VENT

MAXIMUM FIXTURE UNITS ALLOWED PER SLOPE			
SIZE OF FIXTURE DRAIN (IN.)	SIZE OF TRAP (IN.)	SLOPE (IN/FT)	DISTANCE FROM TRAP (FT)
1 1/4"	1 1/4"	1/4	5'
1 1/2"	1 1/4"	1/4	5'
1 1/2"	1 1/2"	1/4	6'
2"	1 1/2"	1/4	6'
2"	2"	1/4	8'
3"	3"	1/8	12'
4"	4"	1/8	16'

FIXTURE WATER SUPPLY PIPES
2009 IPC, TABLE 604.5

MINIMUM SIZES OF FIXTURE WATER SUPPLY PIPES	
FIXTURE	MINIMUM PIPE SIZE (IN.)
BATHTUBS	1/2"
KITCHEN SINK	1/2"
LAUNDRY	1/2"
LAVATORY	1/2"
SHOWER	1/2"
WATER CLOSET, FLUSH TANK	1/2"

SANITARY SEWER
2009 IPC, TABLE 710.1(1)
BUILDING DRAINS AND SEWERS

MAXIMUM FIXTURE UNITS ALLOWED PER SLOPE (INCLD BRANCHES)			
PIPE DIA.	1/8" PER FT	1/4" PER FT	1/2" PER FT
3"	36	42	50
4"	180	216	250
5"	390	450	575
6"	700	840	1000
MIN. SIZE OF AN BLDG DRAIN SERVING A WATER CLOSET IS 3"			

NOTE:
ALL BUILDING ARE (3) STORY UNLESS NOTED OTHERWISE. ALL LINE SIZES ARE BASED ON 1/4" PER FT. SLOPE (UNC). PROVIDE CLEANOUTS PER IPC 708.3.1: 1 PER 100' (ONE PER HUNDRED FEET)

SANITARY SEWER
2009 IPC, TABLE 710.1(2)
HORIZONTAL FIXTURES BRANCHES AND STACKS

MAXIMUM FIXTURE UNITS				
PIPE DIA.	TOTAL FOR HOR BRANCH	STACK BRANCH INTERVAL	3 STORY STACK	4 STORY STACK
3"	20	20	48	72
4"	160	90	240	500
5"	360	200	540	1100
6"	620	350	960	1900
MIN. SIZE SERVING WC=3"				

WATER CONSERVATION
2009 IPC, TABLE 604.4

MAXIMUM WATER USAGE PER FIXTURE	
PRIVATE WATER CLOSETS	1.6 GAL/FLUSH
LAVATORY	2.2 GPM AT 60 PSI
PRIVATE SINK/FAUCETS	2.2 GPM AT 60 PSI
SHOWERHEADS	2.5 GPM AT 80 PSI

NOTE:
VERIFY WATER PRESSURE AT BUILDING ENTRANCE AND INSTALL PRESSURE REDUCING VALVE TO LIMIT 80 PSI PER IPC 604.8
WATER PIPING SIZING BASED ON PROVIDING A MINIMUM OF 15 PSI AT THE MOST REMOTE OUTLET.

STATE OF TEXAS
NORMAN S. HOFFMAN
95483
LICENSED
PROFESSIONAL ENGINEER

The seal appearing on this document was authorized by NORMAN HOFFMAN P.E. 95483 12/7/2017

GALVESTON COUNTY
BEACH PAVILION
CRYSTAL BEACH, TX 77650
BE–Arc LLC Project No : C–13–007.01

Ibis Engineering
REG # F–11156
P.O. Box 55171
Galveston, Texas 77555
PH 409.621.6740
THIS PRINT IS THE PROPERTY OF IBIS ENGINEERING IT MUST NOT BE TRACED OR REPRODUCED IN ANY MANNER NOR SHALL IT BE SUBMITTED WITHOUT PRIOR WRITTEN CONSENT FROM IBIS ENGINEERING.

BRAX EASTERWOOD
DESIGN
2728 AVENUE Q SUITE 2
GALVESTON TEXAS 77550
PHONE 409–354–8976
EASTERWOOD@BEAIA.COM

FOR PERMIT

DATE	REVISION

DESIGN DEVELOPMENT

DATE ISSUED:
12/7/2017

COPYRIGHT 2017

P3.0

COUNTY APPROVAL:
SIGNATURE ______________________________ DATE______________

PLUMBING SPECIFICATIONS

DOMESTIC WATER PIPING– COPPER TUBE AND FITTINGS

A. HARD COPPER TUBE: ASTM B 88, TYPE L (ASTM B 88M, TYPE B) WATER TUBE, DRAWN TEMPER.
1. CAST–COPPER SOLDER–JOINT FITTINGS: ASME B16.18, PRESSURE FITTINGS.
2. WROUGHT–COPPER SOLDER–JOINT FITTINGS: ASME B16.22, WROUGHT–COPPER PRESSURE FITTINGS.
3. BRONZE FLANGES: ASME B16.24, CLASS 150, WITH SOLDER–JOINT ENDS.
4. COPPER UNIONS: MSS SP–123, CAST–COPPER–ALLOY, HEXAGONAL –STOCK BODY, WITH BALL –AND–SOCKET, METAL–TO–METAL SEATING SURFACES. AND SOLDER–JOINT OR THREADED ENDS.

B. SOFT COPPER TUBE: ASTM B 88, TYPE K (ASTM B 88M, TYPE A) AND ASTM B 88, TYPE L (ASTM B 88M, TYPE B) WATER TUBE, ANNEALED TEMPER. COPPER SOLDER–JOINT FITTINGS: ASME B16.22, WROUGHT–COPPER PRESSURE FITTINGS. COPPER PRESSURE–SEAL–JOINT FITTINGS:
MANUFACTURERS: SUBJECT TO COMPLIANCE WITH REQUIREMENTS, PROVIDE PRODUCTS BY ONE OF THE FOLLOWING:
1. NIBCO INC.
2. VIEGA; PLUMBING AND HEATING SYSTEMS.
NPS 2 (DN 50) AND SMALLER: WROUGHT–COPPER FITTING WITH EPDM–RUBBER O–RING SEAL IN EACH END.
NPS 3 AND NPS 4 (DN 80 AND DN 100): CAST–BRONZE OR WROUGHT–COPPER FITTING WITH EPDM–RUBBER 0–RING SEALS IN EACH END.

C. DIELECTRIC FITTINGS
GENERAL REQUIREMENTS' ASSEMBLY OF COPPER ALLOY AND FERROUS MATERIALS WITH SEPARATING NONCONDUCTIVE INSULATING MATERIAL. INCLUDE END CONNECTIONS COMPATIBLE WITH PIPES TO BE JOINED.

D. DRAWING PLANS, SCHEMATICS, AND DIAGRAMS INDICATE GENERAL LOCATION AND ARRANGEMENT OF DOMESTIC WATER PIPING. INDICATED LOCATIONS AND ARRANGEMENTS ARE USED TO SIZE PIPE AND CALCULATE FRICTION LOSS, EXPANSION, AND OTHER DESIGN CONSIDERATIONS. INSTALL PIPING AS INDICATED UNLESS DEVIATIONS TO LAYOUT ARE APPROVED ON COORDINATION DRAWINGS.

E. INSTALL COPPER TUBING UNDER BUILDING SLAB ACCORDING TO CDA'S "COPPER TUBE HANDBOOK."

F. INSTALL SHUTOFF VALVE IMMEDIATELY UPSTREAM OF EACH DIELECTRIC FITTING.

G. INSTALL DOMESTIC WATER PIPING LEVEL V!TH 0.125 PERCENT SLOPE DOWNWARD TOWARD DRAIN AND PLUMB.

H. INSTALL PIPING CONCEALED FROM VIEW AND PROTECTED FROM PHYSICAL CONTACT BY BUILDING OCCUPANTS UNLESS OTHERI'!SE INDICATED AND EXCEPT IN EQUIPMENT ROOMS AND SERVICE AREAS.

I. INSTALL PIPING INDICATED TO BE EXPOSED AND PIPING IN EQUIPMENT ROOMS AND SERVICE AREAS AT RIGHT ANGLES OR PARALLEL TO BUILDING WALLS. DIAGONAL RUNS ARE PROHIBITED UNLESS SPECIFICALLY INDICATED OTHERWISE.

J. INSTALL PIPING ABOVE ACCESSIBLE CEILINGS TO ALLOW SUFFICIENT SPACE FOR CEILING PANEL REMOVAL, AND COORDINATE WITH OTHER SERVICES OCCUPYING THAT SPACE.

K. INSTALL PIPING ADJACENT TO EQUIPMENT AND SPECIAL TIES TO ALLOW SERVICE AND MAINTENANCE.

L. INSTALL PIPING TO PERMIT VALVE SERVICING.

M. INSTALL NIPPLES, UNIONS, SPECIAL FITTINGS, AND VALVES WITH PRESSURE RATINGS THE SAME AS OR HIGHER THAN SYSTEM PRESSURE RATING USED IN APPLICATIONS BELOW UNLESS OTHERWISE INDICATED.

N. INSTALL PIPING FREE OF SAGS AND BENDS.

O. INSTALL FITTINGS FOR CHANGES IN DIRECTION AND BRANCH CONNECTIONS.

P. INSTALL UNIONS IN COPPER TUBING AT FINAL CONNECTION TO EACH PIECE OF EQUIPMENT, MACHINE, AND SPECIALTY.

Q. INSTALL SLEEVES FOR PIPING PENETRATIONS OF WALLS, CEILINGS, AND FLOORS.

R. INSTALL ESCUTCHEONS FOR PIPING PENETRATIONS OF WALLS, CEILINGS, AND FLOORS.

S. INSTALL SHUTOFF VALVE CLOSE TO WATER MAIN ON EACH BRANCH AND RISER SERVING PLUMBING FIXTURES OR EQUIPMENT, ON EACH WATER SUPPLY TO EQUIPMENT, AND ON EACH WATER SUPPLY TO PLUMBING FIXTURES THAT DO NOT HAVE SUPPLY STOPS. USE BALL VALV£S FOR PIPING NPS 2 (DN 50) AND SMALLER. USE GATE VALVES FOR PIPING NPS 2–1/2 (DN 65) AND LARGER.

T. HANGER AND SUPPORT INSTALLATION: SUPPORT VERTICAL PIPING AND TUBING AT BASE AND AT EACH FLOOR.

U. ROD DIAMETER MAY BE REDUCED ONE SIZE FOR DOUBLE–ROD HANGERS, TO A MINIMUM OF 3/8 INCH (10 MM).

V. INSTALL HANGERS FOR COPPER TUBING WITH THE FOLLOWING MAXIMUM HORIZONTAL SPACING AND MINIMUM ROD DIAMETERS:
1. NPS 3/4 (DN 20) AND SMALLER: 60 INCHES (1500 MM) WITH 3/8–INCH (10–MM) ROD.
2. NPS 1 AND NPS 1–1/4 (DN 25 AND DN 32): 72 INCHES (1BDD MM) WITH 3/8–INCH (10–MM) ROD.
3. NPS 1–1/2 AND NPS 2 (DN 4D AND DN 50): 96 INCHES (2400 MM) WITH 3/8–INCH (10–MM) ROD.
4. NPS 2–1/2 (DN 65): 108 INCHES (2700 MM) WITH 1/2–INCH (13–MM) ROD.
5. NPS 3 TO NPS 5 (DN 80 TO DN 125): 10 FEET (3 M) WITH 1/2–INCH (13–MM) ROD.
6. NPS 6 (DN 150): 10 FEET (3 M) WITH 5/8–INCH (16–MM) ROD.
7. NPS 8 (DN 200): 10 FEET (3 M) WITH 3/4–INCH (19–MM) ROD.

W. INSTALL SUPPORTS FOR VERTICAL COPPER TUBING EVERY 10 FEET (3 M).

X. FIELD QUALITY CONTROL PERFORM TESTS AND INSPECTIONS. PIPING INSPECTIONS:
1. DO NOT ENCLOSE, COVER, OR PUT PIPING INTO OPERATION UNTIL IT HAS BEEN INSPECTED AND APPROVED BY AUTHORITIES HAVING JURISDICTION.
2. DURING INSTALLATION, NOTIFY AUTHORITIES HAVING JURISDICTION AT LEAST ONE DAY BEFORE INSPECTION MUST BE MADE. PERFORM TESTS SPECIFIED BELOW IN PRESENCE OF AUTHORITIES HAVING JURISDICTION:
3. ROUGHING–IN INSPECTION' ARRANGE FOR INSPECTION OF PIPING BEFORE CONCEALING OR CLOSING–IN AFTER ROUGHING–IN AND BEFORE SETTING FIXTURES.
4. FINAL INSPECTION: ARRANGE FINAL INSPECTION FOR AUTHORITIES HAVING JURISDICTION TO OBSERVE TESTS SPECIFIED BELOW AND TO ENSURE COMPLIANCE WITH REQUIREMENTS.
5. REINSPECTION: IF AUTHORITIES HAVING JURISDICTION FIND THAT PIPING IMLL NOT PASS TESTS OR INSPECTIONS, MAKE REQUIRED CORRECTIONS AND ARRANGE FOR REINSPECTION.
6. REPORTS: PREPARE INSPECTION REPORTS AND HAVE THEM SIGNED BY AUTHORITIES HAVING JURISDICTION.

Y. PIPING TESTS:
1. FILL DOMESTIC WATER PIPING. CHECK COMPONENTS TO DETERMINE THAT THEY ARE NOT AIR BOUND AND THAT PIPING IS FULL OF WATER.
2. TEST FOR LEAKS AND DEFECTS IN NEW PIPING AND PARTS OF EXISTING PIPING THAT HAVE BEEN ALTERED, EXTENDED, OR REPAIRED. IF TESTING IS PERFORMED IN SEGMENTS, SUBMIT A SEPARATE REPORT FOR EACH TEST, COMPLETE WITH DIAGRAM OF PORTION OF PIPING TESTED.
3. LEAVE NEW, ALTERED, EXTENDED, OR REPLACED DOMESTIC WATER PIPING UNCOVERED AND UNCONCEALED UNTIL IT HAS BEEN TESTED AND APPROVED. EXPOSE WORK THAT WAS COVERED DR CONCEALED BEFORE IT WAS TESTED.
4. CAP AND SUBJECT PIPING TO STATIC WATER PRESSURE OF 50 PSIG (345 KPA) ABOVE OPERATING PRESSURE, WITHOUT EXCEEDING PRESSURE RATING OF PIPING SYSTEM MATERIALS. ISOLATE TEST SOURCE AND ALLOW TO STAND FOR FOUR HOURS. LEAKS AND LOSS IN TEST PRESSURE CONSTITUTE DEFECTS THAT MUST BE REPAIRED.
5. REPAIR LEAKS AND DEFECTS WITH NEW MATERIALS AND RETEST PIPING OR PORTION THEREOF UNTIL SATISFACTORY RESULTS ARE OBTAINED.
6. PREPARE REPORTS FOR TESTS AND FOR CORRECTIVE ACTION REQUIRED.

Z. DOMESTIC WATER PIPING WILL BE CONSIDERED DEFECTIVE IF IT DOES NOT PASS TESTS AND INSPECTIONS.
AA. PREPARE TEST AND INSPECTION REPORTS.

AB. CLEAN AND DISINFECT POTABLE AND NON–POTABLE DOMESTIC WATER PIPING AS FOLLOWS:
AC. PURGE NEW PIPING AND PARTS OF EXISTING PIPING n–IAT HAVE BEEN ALTERED, EXTENDED, OR REPAIRED BEFORE USING.
AD. USE PURGING AND DISINFECTING PROCEDURES PRESCRIBED BY AUTHORITIES HAVING JURISDICTION; IF METHODS ARE NOT PRESCRIBED, USE PROCEDURES DESCRIBED IN EITHER AWWA C651 OR AWWA C652 DR FOLLOW PROCEDURES DESCRIBED BELOW:
1. FLUSH PIPING SYSTEM WITH CLEAN, POTABLE WATER UNTIL DIRTY WATER DOES NOT APPEAR AT OUTLETS.
2. FLUSH SYSTEM WITH CLEAN, POTABLE WATER UNTIL NO CHLORINE IS IN WATER COMING FROM SYSTEM AFTER THE STANDING TIME.
3. SUBMIT WATER SAMPLES IN STERILE BOTTLES TO AUTHORITIES HAVING JURISDICTION. REPEAT PROCEDURES IF BIOLOGICAL EXAMINATION SHOWS CONTAMINATION.
AE. UNDER–BUILDING–SLAB, DOMESTIC WATER PIPING, NPS 2 (DN 50) AND SMALLER, SHALL BE THE FOLLOWING:
1. SOFT COPPER TUBE, ASTM B 88, TYPE L (ASTM B 88M, TYPE B); WROUGHT–COPPER SOLDER–JOINT FITTINGS; AND BRAZED JOINTS.
AF. ABOVEGROUND DOMESTIC WATER PIPING, NPS 2 (DN 50) AND SMALLER, SHALL BE THE FOLLOWING:
1. HARD COPPER TUBE, ASTM B 88, TYPE L (ASTM B 88M, TIPE B); WROUGHT–COPPER SOLDER–JOINT FITTINGS; AND SOLDERED JOINTS.
AG. ABOVEGROUND DOMESTIC WATER PIPING, NPS 2–1/2 TO NPS 4 (DN 65 TO DN 100), SHALL BE OF THE FOLLOWING:
1. HARD COPPER TUBE, ASTM B 88, TYPE L (ASTM B 88M, TIPE B); CAST–COPPER SOLDER–JOINT FITTINGS; AND SOLDERED JOINTS.
2. GALVANIZED–STEEL PIPE; GROOVED–JOINT, GALVANIZED–STEEL–PIPE APPURTENANCES; AND GROOVED JOINTS.
AH. DRAWINGS INDICATE VALVE TYPES TO BE USED. WHERE SPECIFIC VALVE TYPES ARE NOT INDICATED, THE FOLLOWING REQUIREMENTS APPLY:
1. SHUTOFF DUTY: USE BALL VALV£S FOR PIPING NPS 2 (DN 50) AND SMALLER. USE GATE VALVES WITH FLANGED ENDS FOR PIPING NPS 2–1/2 (DN 65) AND LARGER.
2. THROTTLING DUTY: USE BALL VALVES FOR PIPING NPS 2 (DN 50) AND SMALLER. USE BALL VALVES WITH FLANGED ENDS FOR PIPING NPS 2–1/2 (DN 65) AND LARGER.
3. HOT–WATER CIRCULATION PIPING, BALANCING DUTY: CALIBRATED BALANCING VALVES.
4. DRAIN DUTY: HOSE–END DRAIN VALVES.
AI. USE CHECK VALVES TO MAINTAIN CORRECT DIRECTION OF DOMESTIC WATER FLOW TO AND FROM EQUIPMENT.
AJ. IRON GROOVED–END VALVES MAY BE USED WITH GROOVED–END PIPING.

SANITARY WASTE

A. HUB–AND–SPIGOT, CAST–IRON SOIL PIPE AND FITTINGS PIPE AND FITTINGS' ASTM A 74, SERVICE CLASS(ES). GASKETS: ASTM C 564, RUBBER.

B. HUBLESS, CAST–IRON SOIL PIPE AND FITTINGS PIPE AND FITTINGS: ASTM A 888 OR CISPI 301. SOVENT STACK FITTINGS: ASME B16.45 OR ASSE 1043, HUBLESS, CAST–IRON AERATOR AND DEAERATOR DRAINAGE FITTINGS. CISPI, HUBLESS–PIPING COUPLINGS:
MANUFACTURERS: SUBJECT TO COMPLIANCE WITH REQUIREMENTS, PROVIDE PRODUCTS BY ONE OF THE FOLLOWING:
1. ANACO–HUSKY, SD–4000.
2. MIFAB, INC.
3. MISSION RUBBER COMPANY; A DIVISION OF MCP INDUSTRIES, INC.
4. CLAMP–ALL CORP.
5. STANDARDS' ASTM C 1277 AND CISPI 310.
6. DESCRIPTION: STAINLESS–STEEL CORRUGATED SHIELD WITH STAINLESS–STEEL BANDS AND TIGHTENING DEVICES; AND ASTM C 564, RUBBER SLEEVE WITH INTEGRAL, CENTER PIPE STOP.

C. DRAWING PLANS, SCHEMATICS, AND DIAGRAMS INDICATE GENERAL LOCATION AND ARRANGEMENT OF PIPING SYSTEMS. INDICATED LOCATIONS AND ARRANGEMENTS WERE USED TO SIZE PIPE AND CALCULATE FRICTION LOSS, EXPANSION, PUMP SIZING, AND OTHER DESIGN CONSIDERATIONS. INSTALL PIPING AS INDICATED UNLESS DEVIATIONS TO LAYOUT ARE APPROVED ON COORDINATION DRAWINGS.
D. INSTALL PIPING IN CONCEALED LOCATIONS UNLESS OTHERWISE INDICATED AND EXCEPT IN EQUIPMENT ROOMS AND SERVICE AREAS.
E. INSTALL PIPING INDICATED TO BE EXPOSED AND PIPING IN EQUIPMENT ROOMS AND SERVICE AREAS AT RIGHT ANGLES OR PARALLEL TO BUILDING WALLS. DIAGONAL RUNS ARE PROHIBITED UNLESS SPECIFICALLY INDICATED OTHERWISE.
F. INSTALL PIPING ABOVE ACCESSIBLE CEILINGS TO ALLOW SUFFICIENT SPACE FOR CEILING PANEL REMOVAL.
G. INSTALL PIPING TO PERMIT VALVE SERVICING.
H. INSTALL PIPING AT INDICATED SLOPES.
I. INSTALL PIPING FREE OF SAGS AND BENDS.
J. INSTALL FITTINGS FOR CHANGES IN DIRECTION AND BRANCH CONNECTIONS.
K. INSTALL PIPING TO ALLOW APPLICATION OF INSULATION.
L. MAKE CHANGES IN DIRECTION FOR SOIL AND WASTE DRAINAGE AND VENT PIPING USING APPROPRIATE BRANCHES, BENDS, AND LONG–SWEEP BENDS. SANITARY TEES AND SHORT–SWEEP 1/4 BENDS MAY BE USED ON VERTICAL STACKS IF CHANGE IN DIRECTION OF FLOW IS FROM HORIZONTAL TO VERTICAL. USE LONG–TURN, DOUBLE Y–BRANCH AND 1/8–BEND FITTINGS IF TWO FIXTURES ARE INSTALLED BACK TO BACK OR SIDE BY SIDE WITH COMMON DRAIN PIPE. STRAIGHT TEES, ELBOWS. AND CROSSES MAY BE USED ON VENT LINES. DO NOT CHANGE DIRECTION OF FLOW MORE THAN 90 DEGREES. USE PROPER SIZE OF STANDARD INCREASERS AND REDUCERS IF PIPES OF DIFFERENT SIZES ARE CONNECTED. REDUCING SIZE OF DRAINAGE PIPING IN DIRECTION OF FLOW IS PROHIBITED.
M. LAY BURIED BUILDING DRAINAGE PIPING BEGINNING AT LOW POINT OF EACH SYSTEM. INSTALL TRUE TO GRADES AND ALIGNMENT INDICATED, WITH UNBROKEN CONTINUITY OF INVERT. PLACE HUB ENDS OF PIPING UPSTREAM. INSTALL REQUIRED GASKETS ACCORDING TO MANUFACTURER'S WRITTEN INSTRUCTIONS FOR USE OF LUBRICANTS, CEMENTS, AND OTHER INSTALLATION REQUIREMENTS. MAINTAIN SWAB IN PIPING AND PULL PAST EACH JOINT AS COMPLETED.
N. INSTALL SOIL AND WASTE DRAINAGE AND VENT PIPING AT THE FOLLOWING MINIMUM SLOPES UNLESS OTHERWISE INDICATED:
1. BUILDING SANITARY DRAIN: 2 PERCENT DO'M\IWARD IN DIRECTION OF FLOW FOR PIPING NPS 3 (ON 80) AND SMALLER; 1 PERCENT DOWNWARD IN DIRECTION OF FLOW FOR PIPING NPS 4 (DN 100) AND LARGER.
2. HORIZONTAL SANITARY DRAINAGE PIPING: 1 PERCENT DOWNWARD IN DIRECTION OF FLOW.
3. VENT PIPING: 1 PERCENT DOWN TOWARD VERTICAL FIXTURE VENT OR TOWARD VENT STACK.
0. INSTALL CAST–IRON SOIL PIPING ACCORDING TO CISPI'S "CAST IRON SOIL PIPE AND FITTINGS HANDBOOK," CHAPTER IV, "INSTALLATION OF CAST IRON SOIL PIPE AND FITTINGS."
1. INSTALL ENCASEMENT ON UNDERGROUND PIPING ACCORDING TO ASTM A 674 OR AWWA C105/A 21.5.
P. DO NOT ENCLOSE, COVER, OR PUT PIPING INTO OPERATION UNTIL IT IS INSPECTED AND APPROVED BY AUTHORITIES HAVING JURISDICTION.
Q. INSTALL SLEEVES FOR PIPING PENETRATIONS OF WALLS, CEILINGS, AND FLOORS.
R. INSTALL ESCUTCHEONS FOR PIPING PENETRATIONS OF WALLS, CEILINGS, AND FLOORS.
S. HANGER AND SUPPORT INSTALLATION COMPLY WITH REQUIREMENTS FOR PIPE HANGER AND SUPPORT DEVICES AND INSTALLATION.
1. INSTALL CARBON–STEEL PIPE HANGERS FOR HORIZONTAL PIPING IN NONCORROSIVE ENVIRONMENTS.
2. INSTALL STAINLESS–STEEL PIPE HANGERS FOR HORIZONTAL PIPING IN CORROSIVE ENVIRONMENTS.
3. INSTALL CARBON–STEEL PIPE SUPPORT CLAMPS FOR VERTICAL PIPING IN NONCORROSIVE ENVIRONMENTS.
4. INSTALL STAINLESS–STEEL PIPE SUPPORT CLAMPS FOR VERTICAL PIPING IN CORROSIVE ENVIRONMENTS.
5. VERTICAL PIPING: MSS TYPE 8 OR TYPE 42, CLAMPS.
6. INSTALL INDIVIDUAL. STRAIGHT, HORIZONTAL PIPING RUNS:
7. 100 FEET (30 M) AND LESS: MSS TYPE 1, ADJUSTABLE, STEEL CLEVIS HANGERS.
8. LONGER THAN 100 FEET {30 M): MSS TYPE 43, ADJUSTABLE ROLLER HANGERS.
9. LONGER THAN 100 FEET (30 M) IF INDICATED: MSS TYPE 49, SPRING CUSHION ROLLS.
10. MULTIPLE, STRAIGHT, HORIZONTAL PIPING RUNS 100 FEET (30 M) OR LONGER: MSS TYPE 44, PIPE ROLLS. SUPPORT PIPE ROLLS ON TRAPEZE.
11. BASE OF VERTICAL PIPING: MSS TYPE 52, SPRING HANGERS.
T. SUPPORT HORIZONTAL PIPING AND TUBING WITHIN 12 INCHES (300 MM) OF EACH FITTING, VALVE, AND COUPLING.
W. INSTALL HANGERS FOR CAST–IRON SOIL PIPING WITH THE FOLLOWING MAXIMUM HORIZONTAL SPACING AND MINIMUM ROD DIAMETERS:
U. SUPPORT VERTICAL PIPING AND TUBING AT BASE AND AT EACH FLOOR.
V. ROD DIAMETER MAY BE REDUCED ONE SIZE FOR DOUBLE–ROD HANGERS, WITH 3/8–INCH (10–MM) MINIMUM RODS.
1. NPS 1–1/2 AND NPS 2 (DN 40 AND DN 50): 60 INCHES (1500 MM) WITH 3/8–INCH (10–MM) ROD.
2. NPS 3 (DN 80): 60 INCHES (1500 MM) WITH 1/2–INCH (13–MM) ROD.
3. NPS 4 AND NPS 5 (DN 100 AND DN 125): 60 INCHES (1500 MM) WITH 5/8–INCH (16–MM) ROD.
4. NPS 6 AND NPS 8 (DN 150 AND DN 200): 60 INCHES (1500 MM) WITH 3/4–INCH (19–MM) ROD.
5. INSTALL SUPPORTS FOR VERTICAL CAST–IRON SOIL PIPING EVERY 15 FEET (4.5 M).

X. DURING INSTALLATION, NOTIFY AUTHORITIES HAVING JURISDICTION AT LEAST 24 HOURS BEFORE INSPECTION MUST BE MADE. PERFORM TESTS SPECIFIED BELOW IN PRESENCE OF AUTHORITIES HAVING JURISDICTION.
ROUGHING–IN INSPECTION: ARRANGE FOR INSPECTION OF PIPING BEFORE CONCEALING OR CLOSING–IN AFTER ROUGHING–IN AND BEFORE SETTING FIXTURES.
FINAL INSPECTION: ARRANGE FOR FINAL INSPECTION BY AUTHORITIES HAVING JURISDICTION TO OBSERVE TESTS SPECIFIED BELOW AND TO ENSURE COMPLIANCE WITH REQUIREMENTS.
Y. REINSPECTION: IF AUTHORITIES HAVING JURISDICTION FIND THAT PIPING WILL NOT PASS TEST OR INSPECTION, MAKE REQUIRED CORRECTIONS AND ARRANGE FOR REINSPECTION.
Z. REPORTS: PREPARE INSPECTION REPORTS AND HAVE THEM SIGNED BY AUTHORITIES HAVING JURISDICTION.

AA. TEST SANITARY DRAINAGE AND VENT PIPING ACCORDING TO PROCEDURES OF AUTI–IORITIES HAVING JURISDICTION OR, IN ABSENCE OF PUBLISHED PROCEDURES, AS FOLLOWS:
1. TEST FOR LEAKS AND DEFECTS IN NEW PIPING AND PARTS OF EXISTING PIPING THAT HAVE BEEN ALTERED, EXTENDED, OR REPAIRED. IF TESTING IS PERFORMED IN SEGMENTS, SUBMIT SEPARATE REPORT FOR EACH TEST, COMPLETE WITH DIAGRAM OF PORTION OF PIPING TESTED.
2. LEAVE UNCOVERED AND UNCONCEALED NEW, ALTERED, EXTENDED, OR REPLACED DRAINAGE AND VENT PIPING UNTIL IT HAS BEEN TESTED AND APPROVED. EXPOSE WORK THAT WAS COVERED OR CONCEALED BEFORE IT WAS TESTED.
3. ROUGHING–IN PLUMBING TEST PROCEDURE: TEST DRAINAGE AND VENT PIPING EXCEPT OUTSIDE LEADERS ON COMPLETION OF ROUGHING–IN. CLOSE OPENINGS IN PIPING SYSTEM AND FILL WITH WATER TO POINT OF OVERFLOW, BUT NOT LESS THAN 10–FOOT HEAD OF WATER (30 KPA). FROM 15 MINUTES BEFORE INSPECTION STARTS TO COMPLETION OF INSPECTION, WATER LEVEL MUST NOT DROP. INSPECT JOINTS FOR LEAKS.
4. FINISHED PLUMBING TEST PROCEDURE: AFTER PLUMBING FIXTURES HAVE BEEN SET AND TRAPS FILLED WITH WATER, TEST CONNECTIONS AND PROVE THEY ARE GASTIGHT AND WATERTIGHT. PLUG VENT–STACK OPENINGS ON ROOF AND BUILDING DRAINS WHERE THEY LEAVE BUILDING. INTRODUCE AIR INTO PIPING SYSTEM EQUAL TO PRESSURE OF 1–INCH WG (250 PA). USE U–TUBE OR MANOMETER INSERTED IN TRAP OF WATER CLOSET TO MEASURE THIS PRESSURE. AIR PRESSURE MUST REMAIN CONSTANT WITHOUT INTRODUCING ADDITIONAL AIR THROUGHOUT PERIOD OF INSPECTION. INSPECT PLUMBING FIXTURE CONNECTIONS FOR GAS AND WATER LEAKS.
5. REPAIR LEAKS AND DEFECTS WITH NEW MATERIALS AND RETEST PIPING, OR PORTION THEREOF, UNTIL SATISFACTORY RESULTS ARE OBTAINED.

AB. CAP AND SUBJECT PIPING TO STATIC–WATER PRESSURE OF 50 PSIG (345 KPA) ABOVE OPERATING PRESSURE, WITHOUT EXCEEDING PRESSURE RATING OF PIPING SYSTEM MATERIALS. ISOLATE TEST SOURCE AND ALLOW TO STAND FOR FOUR HOURS, LEAKS AND LOSS IN TEST PRESSURE CONSTITUTE DEFECTS THAT MUST BE REPAIRED.
AC. REPAIR LEAKS AND DEFECTS V!TH NEW MATERIALS AND RETEST PIPING, OR PORTION THEREOF, UNTIL SATISFACTORY RESULTS ARE OBTAINED.
AD. PREPARE REPORTS FOR TESTS AND REQUIRED CORRECTIVE ACTION.

AE. CLEANING AND PROTECTION, CLEAN INTERIOR OF PIPING. REMOVE DIRT AND DEBRIS AS WORK PROGRESSES, PROTECT DRAINS DURING REMAINDER OF CONSTRUCTION PERIOD TO AVOID CLOGGING WITH DIRT AND DEBRIS AND TO PREVENT DAMAGE FROM TRAFFIC AND CONSTRUCTION WORK. PLACE PLUGS IN ENDS OF UNCOMPLETED PIPING AT END OF DAY AND WHEN WORK STOPS.

AF. ABOVEGROUND, SOIL AND WASTE PIPING 6" AND SMALLER SHALL BE ANY OF THE FOLLOWING:
1. SERVICE CLASS, CAST–IRON SOIL PIPE AND FITTINGS; GASKETS; AND GASKETS JOINTS.
2. HUBLESS, CAST–IRON SOIL PIPE AND FITTINGS HEAVY–DUTY HUBLESS–PIPING COUPLINGS; AND COUPLED JOINTS.

AI. ABOVEGROUND, SOIL AND WASTE PIPING 8" AND LARGER SHALL BE ANY OF THE FOLLOWING:
1.SERVICE WEIGHT(SV) HUB AND SPIGOT CAST IRON SOIL PIPE FITTINGS

AJ. ABOVEGROUND, VENT PIPING 6" AND SMALLER SHALL BE ANY OF THE FOLLOWING:
1.HUBLESS, CAST–IRON SOIL PIPE AND FITTINGS; CISPI HUBLESS–PIPING COUPLINGS; AND COUPLED JOINTS.

AK. ABOVEGROUND, VENT PIPING 8" AND LARGER SHALL BE ANY OF THE FOLLOWING:
1.SERV1CE CLASS, CAST–IRON SOIL PIPE AND FITTINGS; GASKETS; AND GASKETS JOINTS.

AL. UNDERGROUND, SOIL, WASTE, AND VENT PIPING 15" AND SMALLER SHALL BE ANY OF THE FOLLOWING:
1. SERVICE CLASS, CAST–IRON SOIL PIPE AND FITTINGS; GASKETS; AND GASKETS JOINTS

CLEANOUTS

A. EXPOSED METAL CLEANOUTS:
MANUFACTURERS: SUBJECT TO COMPLIANCE WITH REQUIREMENTS, PROVIDE PRODUCTS BY ONE OF THE FOLLOWING:
1. JOSAM COMPANY; JOSAM DIV.
2. MIFAB, INC.
3. SMITH, JAY R. MFG. CO.; DIVISION OF SMITH INDUSTRIES, INC.
4. TYLER PIPE; WADE DIV.
5. ZURN PLUMBING PRODUCTS GROUP; SPECIFICATION DRAINAGE OPERATION.
STANDARD: ASME A112.36.2M FOR CAST IRON FOR CLEANOUT TEST TEE.
SIZE: SAME AS CONNECTED DRAINAGE PIPING
BODY MATERIAL: HUB–AND–SPIGOT, CAST–IRON SOIL PIPE T–BRANCH AS REQUIRED TO MATCH CONNECTED PIPING.
CLOSURE: COUNTERSUNK PLUG.
CLOSURE PLUG SIZE: SAME AS OR NOT MORE THAN ONE SIZE SMALLER THAN CLEANOUT SIZE.
CLOSURE: STAINLESS–STEEL PLUG WITH SEAL.

B. METAL FLOOR CLEANOUTS:
MANUFACTURERS: SUBJECT TO COMPLIANCE WITH REQUIREMENTS, PROVIDE PRODUCTS BY ONE OF THE FOLLOWING:
1. JOSAM COMPANY; JOSAM DIV.
2. SMITH, JAY R. MFG. CO.; DIVISION OF SMITH INDUSTRIES, INC.
3. TYLER PIPE; WADE DIV.
4. A. MIFAB, INC.
STANDARD: ASME A112.36.2M FOR THREADED, ADJUSTABLE HOUSING CLEANOUT.
SIZE: SAME AS CONNECTED BRANCH.
TYPE: ADJUSTABLE HOUSING THREADED, ADJUSTABLE HOUSING.
BODY OR FERRULE: CAST IRON.
CLAMPING DEVICE: NOT REQUIRED.
OUTLET CONNECTION: THREADED.
CLOSURE: BRASS PLUG WITH STRAIGHT THREADS AND GASKET.
ADJUSTABLE HOUSING MATERIAL: CAST IRON WITH SET–SCREWS OR OTHER DEVICE.
FRAME AND COVER MATERIAL AND FINISH: ROUGH BRONZE.
FRAME AND COVER SHAPE: ROUND.
TOP LOADING CLASSIFICATION: LIGHT DUTY.
RISER: ASTM A 74, SERVICE CLASS, CAST–IRON DRAINAGE PIPE FITTING AND RISER TO CLEAN OUT.
STANDARD: ASME A112.3.1.
SIZE: SAME AS CONNECTED BRANCH.
HOUSING: STAINLESS STEEL.
CLOSURE: STAINLESS STEEL WITH SEAL.
RISER: STAINLESS–STEEL DRAINAGE PIPE FITTING TO CLEANOUT.

C. CAST–IRON WALL CLEANOUTS:
MANUFACTURERS: SUBJECT TO COMPLIANCE WITH REQUIREMENTS, PROVIDE PRODUCTS BY ONE OF THE FOLLOWING:
1. JOSAM COMPANY; JOSAM DIV.
2. MIFAB, INC.
3. SMITH, JAY R. MFG. CO.; DIVISION OF SMITH INDUSTRIES, INC.
4. TYLER PIPE; WADE DIV.
5. ZURN PLUMBING PRODUCTS GROUP; SPECIFICATION DRAINAGE OPERATION.
STANDARD: ASME A112.36.2M. INCLUDE WALL ACCESS.
SIZE: SAME AS CONNECTED DRAINAGE PIPING.
BODY: HUB–AND–SPIGOT, CAST–IRON SOIL PIPE T–BRANCH AS REQUIRED TO MATCH CONNECTED PIPING.
CLOSURE: COUNTERSUNK OR RAISED–HEAD, BRASS PLUG.
CLOSURE PLUG SIZE: SAME AS OR NOT MORE THAN ONE SIZE SMALLER THAN CLEANOUT SIZE.
WALL ACCESS: ROUND, STAINLESS–STEEL COVER PLATE WITH SCREW.
WALL ACCESS: ROUND, STAINLESS–STEEL WALL–INSTALLATION FRAME AND COVER.

D. INSTALL CLEANOUTS IN ABOVEGROUND PIPING AND BUILDING DRAIN PIPING ACCORDING TO THE FOLLOWING, UNLESS OTHERWISE INDICATED:
1. SIZE SAME AS DRAINAGE PIPING UP TO NPS 4 (DN 100). USE NPS 4 (DN 100) FOR LARGER DRAINAGE PIPING UNLESS LARGER CLEANOUT IS INDICATED.
2. LOCATE AT EACH CHANGE IN DIRECTION OF PIPING GREATER THAN 45 DEGREES.
3. LOCATE AT MINIMUM INTERVALS OF 50 FEET (15 M) FOR PIPING NPS 4 (DN 100) AND SMALLER AND 100 FEET (30 M) FOR LARGER PIPING.
4. LOCATE AT BASE OF EACH VERTICAL SOIL AND WASTE STACK.
E. FOR FLOOR CLEANOUTS FOR PIPING BELOW FLOORS, INSTALL CLEANOUT DECK PLATES WITH TOP FLUSH WITH FINISHED FLOOR.
F. FOR CLEANOUTS LOCATED IN CONCEALED PIPING, INSTALL CLEANOUT WALL ACCESS COVERS, OF TYPES INDICATED, WITH FRAME AND COVER FLUSH WITH FINISHED WALL
G. INSTALL FLOOR DRAINS AT LOW POINTS OF SURFACE AREAS TO BE DRAINED. SET GRATES OF DRAINS FLUSH WITH FINISHED FLOOR, UNLESS OTHERWISE INDICATED.
H. INSTALL ROOF FLASHING ASSEMBLIES ON SANITARY STACK VENTS AND VENT STACKS THAT EXTEND THROUGH ROOF.
I. ASSEMBLE OPEN DRAIN FITTINGS AND INSTALL WITH TOP OF HUB 2 INCHES (51 MM) ABOVE FLOOR.
J. INSTALL DEEP–SEAL TRAPS ON FLOOR DRAINS AND OTHER WASTE OUTLETS, IF INDICATED.
K. INSTALL FLOOR–DRAIN, TRAP–SEAL PRIMER FITTINGS ON INLET TO FLOOR DRAINS THAT REQUIRE TRAP–SEAL PRIMER CONNECTION.
1. EXCEPTION: FITTING MAY BE OMITTED IF TRAP HAS TRAP–SEAL PRIMER CONNECTION.
2. SIZE: SAME AS FLOOR DRAIN INLET.
L. INSTALL AIR–GAP FITTINGS ON DRAINING–TYPE BACKFLOW PREVENTERS AND ON INDIRECT–WASTE PIPING DISCHARGE INTO SANITARY DRAINAGE SYSTEM.

PLUMBING FIXTURES

A. ASSEMBLE PLUMBING FIXTURES, TRIM, FITTINGS, AND OTHER COMPONENTS ACCORDING TO MANUFACTURERS' WRITTEN INSTRUCTIONS.
1. INSTALL OFF–FLOOR SUPPORTS, AFFIXED TO BUILDING SUBSTRATE, FOR WALL–MOUNTING FIXTURES.
2. USE CARRIER SUPPORTS WITH WASTE FITTING AND SEAL FOR BACK–OUTLET FIXTURES.
3. USE CARRIER SUPPORTS WITHOUT WASTE FITTING FOR FIXTURES WITH TUBULAR WASTE PIPING.
B. USE CHAIR– TYPE CARRIER SUPPORTS WITH RECTANGULAR STEEL UPRIGHTS FOR ACCESSIBLE FIXTURES.
C. INSTALL BACK–OUTLET, WALL–MOUNTING FIXTURES ONTO WASTE FITTING SEALS AND ATTACH TO SUPPORTS.
D. INSTALL FLOOR–MOUNTING FIXTURES ON CLOSET FLANGES OR OTHER ATTACHMENTS TO PIPING OR BUILDING SUBSTRATE.
E. INSTALL WALL–MOUNTING FIXTURES WITH TUBULAR WASTE PIPING ATTACHED TO SUPPORTS.
F. INSTALL FLOOR–MOUNTING, BACK–OUTLET WATER CLOSETS ATTACHED TO BUILDING FLOOR SUBSTRATE AND WALL BRACKET AND ONTO WASTE FITTING SEALS.
G. INSTALL COUNTER–MOUNTING FIXTURES IN AND ATTACHED TO CASEWORK.
H. INSTALL FIXTURES LEVEL AND PLUMB ACCORDING TO ROUGHING–IN DRAWINGS.
I. INSTALL WATER–SUPPLY PIPING WITH STOP ON EACH SUPPLY TO EACH FIXTURE TO BE CONNECTED TO WATER DISTRIBUTION PIPING. ATTACH SUPPLIES TO SUPPORTS TO SUBSTRATE WITHIN PIPE SPACES BEHIND FIXTURES. INSTALL STOPS IN LOCATIONS WHERE THEY CAN BE EASILY REACHED FOR OPERATION.
J. EXCEPTION: USE BALL VALVES IF SUPPLY STOPS ARE NOT SPECIFIED WITH FIXTURE.
K. INSTALL TRAP AND TUBULAR WASTE PIPING ON DRAIN OUTLET OF EACH FIXTURE TO BE DIRECTLY CONNECTED TO SANITARY DRAINAGE SYSTEM.
L. INSTALL TUBULAR WASTE PIPING ON DRAIN OUTLET OF EACH FIXTURE TO BE INDIRECTLY CONNECTED TO DRAINAGE SYSTEM.
M. INSTALL FLUSHOMETER VALVES FOR ACCESSIBLE WATER CLOSETS AND URINALS WITH HANDLE MOUNTED ON WIDE SIDE OF COMPARTMENT. INSTALL OTHER ACTUATORS IN LOCATIONS THAT ARE EASY FOR PEOPLE WITH DISABILITIES TO REACH.
N. INSTALL TANKS FOR ACCESSIBLE, TANK–TYPE WATER CLOSETS WITH LEVER HANDLE MOUNTED ON WIDE SIDE OF COMPARTMENT.
O. INSTALL OPEN FRONT TOILET SEATS ON WATER CLOSETS.
P. INSTALL WATER–SUPPLY FLOW–CONTROL FITTINGS WITH SPECIFIED FLOW RATES IN FIXTURE SUPPLIES AT STOP VALVES.
Q. INSTALL FAUCET FLOW–CONTROL FITTINGS WITH SPECIFIED FLOW RATES AND PATTERNS IN FAUCET SPOUTS IF FAUCETS ARE NOT AVAILABLE WITH REQUIRED RATES AND PATTERNS. INCLUDE ADAPTERS IF REQUIRED.
R. INSTALL SHOWER FLOW–CONTROL FITTINGS WITH SPECIFIED MAXIMUM FLOW RATES IN SHOWER ARMS,
S. INSTALL TRAPS ON FIXTURE OUTLETS.
1. EXCEPTION: OMIT TRAP ON FIXTURES WITH INTEGRAL TRAPS.
2. EXCEPTION: OMIT TRAP ON INDIRECT WASTES, UNLESS OTHERWISE INDICATED.
U. INSTALL ESCUTCHEONS AT PIPING WALL CEILING PENETRATIONS IN EXPOSED, FINISHED LOCATIONS AND WITHIN CABINETS AND MILLWORK. USE OEEP–PATTERN ESCUTCHEONS IF REQUIRED TO CONCEAL PROTRUDING FITTINGS.
V. SEAL JOINTS BETWEEN FIXTURES AND WALLS, FLOORS, AND COUNTERTOPS USING SANITARY–TYPE, ONE–PART, MILDEW–RESISTANT SILICONE SEALANT. MATCH SEALANT COLOR TO FIXTURE COLOR.
W. VERIFY THAT INSTALLED PLUMBING FIXTURES ARE CATEGORIES AND TYPES SPECIFIED FOR LOCATIONS WHERE INSTALLED.
X. CHECK THAT PLUMBING FIXTURES ARE COMPLETE WITH TRIM, FAUCETS, FITTINGS, AND OTHER SPECIFIED COMPONENTS.
Y. INSPECT INSTALLED PLUMBING FIXTURES FOR DAMAGE. REPLACE DAMAGED FIXTURES AND COMPONENTS.
Z. TEST INSTALLED FIXTURES AFTER WATER SYSTEMS ARE PRESSURIZED FOR PROPER OPERATION. REPLACE MALFUNCTIONING FIXTURES AND COMPONENTS, THEN RETEST. REPEAT PROCEDURE UNTIL UNITS OPERATE PROPERLY.
AA. INSTALL FRESH BATTERIES IN SENSOR–OPERATED MECHANISMS.
AB. CLEAN FIXTURES, FAUCETS, AND OTHER FITTINGS WITH MANUFACTURERS' RECOMMENDED CLEANING METHODS AND MATERIALS. DO THE FOLLOWING:
1. REMOVE FAUCET SPOUTS AND STRAINERS, REMOVE SEDIMENT AND DEBRIS, AND REINSTALL STRAINERS AND SPOUTS.
2. REMOVE SEDIMENT AND DEBRIS FROM DRAINS.
AC. AFTER COMPLETING INSTALLATION OF EXPOSED, FACTORY–FINISHED FIXTURES, FAUCETS, AND FITTINGS, INSPECT EXPOSED FINISHES AND REPAIR DAMAGED FINISHES.

PLUMBING PIPING INSULATION

A. INSULATION MATERIALS
PRODUCTS SHALL NOT CONTAIN ASBESTOS, LEAD, MERCURY, OR MERCURY COMPOUNDS. PRODUCTS THAT COME IN CONTACT WITH STAINLESS STEEL SHALL HAVE A LEACHABLE CHLORIDE CONTENT OF LESS THAN 50 PPM WHEN TESTED ACCORDING TO ASTM C 871.

B. FOAM INSULATION MATERIALS SHALL NOT USE CFC OR HCFC BLOWING AGENTS IN THE MANUFACTURING PROCESS.

C. MINERAL–FIBER, PREFORMED PIPE INSULATION:
PRODUCTS: SUB.ECT TO COMPLIANCE Wln–1 REQUIREMENTS, PROI;IDE TI–IE FOLLOWING] [PROVIDE ONE OF THE FOLLOWING:
1. CERTAIN TEED, CO.
2. JOHNS MANVILLE; MICRO–LOK.
3. KNAUF INSULATION; 1000–DEGREE PIPE INSULATION.
4. MANSON INSULATION INC.; ALLEY–K.
5. OWENS CORNING; FIBERGLAS PIPE INSULATION.
TYPE I, 850 DEG F (454 DEG C) MATERIALS' MINERAL OR GLASS FIBERS BONDED WITH A THERMOSETTING RESIN. COMPLY WITH ASTM C 547, TYPE I, GRADE A, WITH FACTORY–APPLIED ASJ–SSL. FACTORY–APPLIED JACKET REQUIREMENTS ARE SPECIFIED IN "FACTORY–APPLIED JACKETS" ARTICLE.
D. MINERAL–FIBER INSULATING CEMENT: COMPLY WITH ASTM C 195.
PRODUCTS: SUBJECT TO COMPLIANCE WITH REQUIREMENTS, PROVIDE THE FOLLOWING:
1. RAMCO INSULATION, INC.; SUPER–STIK.

E. MINERAL–FIBER, HYDRAULIC–SETTING INSULATING AND FINISHING CEMENT: COMPLY WITH ASTM C 449.
PRODUCTS: SUBJECT TO COMPLIANCE WITH REQUIREMENTS, PROVIDE THE FOLLOWING:
1. RAMCO INSULATION, INC.; RAMCOTE 1200 AND QUIK–COTE.
F. ADHESIVES
MATERIALS SHALL BE COMPATIBLE I'!TH INSULATION MATERIALS, JACKETS, AND SUBSTRATES AND FOR BONDING INSULATION TO ITSELF AND TO SURFACES TO BE INSULATED, UNLESS OTHERWISE INDICATED.
MINERAL–FIBER ADHESIVE: COMPLY WITH MIL–A–3316C, CLASS 2, GRADE A.
PRODUCTS: SUBJECT TO COMPLIANCE WITH REQUIREMENTS, PROVIDE ONE OF THE FOLLOWING:
1. CHILDERS BRAND, SPECIALTY CONSTRUCTION BRANDS, INC., A BUSINESS OF H. B. FULLER COMPANY; CP–127.
2. EAGLE BRIDGES – MARATHON INDUSTRIES; 225.
3. FOSTER BRAND, SPECIALTY CONSTRUCTION BRANDS, INC., A BUSINESS OF H. B. FULLER COMPANY; 85–60/85–70.
4. MON–ECO INDUSTRIES, INC.; 22–25.
FOR INDOOR APPLICATIONS, USE ADHESIVE THAT HAS A VOC CONTENT OF 80 G/L OR LESS WHEN CALCULATED ACCORDING TO 40 CFR 59, SUBPART D (EPA METHOD 24).

G. ASJ ADHESIVE, AND FSK JACKET ADHESIVE: COMPLY WITH MIL–A–3316C, CLASS 2, GRADE A FOR BONDING INSULATION JACKET LAP SEAMS AND JOINTS.
PRODUCTS: SUBJECT TO COMPLIANCE WITH REQUIREMENTS, PROVIDE ONE OF THE FDLLOI'!NG:
1. CHILDERS BRAND, SPECIALTY CONSTRUCTION BRANDS, INC., A BUSINES

STATE OF TEXAS
NORMAN S. HOFFMAN
95483
LICENSED
PROFESSIONAL ENGINEER

The seal appearing on this document was authorized by NORMAN HOFFMAN P.E. 95483 12/7/2017

GALVESTON COUNTY
BEACH PAVILION
CRYSTAL BEACH, TX 77650
BE–Arc LLC Project No : C–13–007.01

ibis Engineering
REG # F–11156
P.O. Box 55171
Galveston, Texas 77555
PH 409.621.6740
THIS PRINT IS THE PROPERTY OF IBIS ENGINEERING IT MUST NOT BE TRACED OR REPRODUCED IN ANY MANNER NOR SHALL IT BE SUBMITTED WITHOUT PRIOR WRITTEN CONSENT FROM IBIS ENGINEERING.

BRAX EASTERWOOD
DESIGN
2728 AVENUE Q SUITE 2
GALVESTON TEXAS 77550
PHONE 409–354–8976
EASTERWOOD@BEAIA.COM

FOR PERMIT

DATE	REVISION

DESIGN DEVELOPMENT

DATE ISSUED:
12/7/2017

COPYRIGHT 2017

P4.0

COUNTY APPROVAL:
SIGNATURE _____ DATE_____

PLUMBING FIXTURE SPECIFICATION

TYPE: HS-1
DESCRIPTION: DUKE MANUFACTUREING, WALL MOUNTED, 10" X 14" X 6".
FAUCET: CHROME PLATED BRASS DECK MOUNTED FAUCET WITH 5" SPOUT, 4" WRIST BLADE HANDLES ON 8" CENTERS, QUARTER TURN OPERATING CARTRIDGES, VANDAL RESISTANT 2.2 GPM AERATOR. CHICAGO MODEL 404-317CP-E12VPJKCP.
STRAINER: CHROME PLATED BRASS GRID STRAINER WITH 6" LONG 17 GAUGE 1-1/4" TAILPIECE WITH LOCK NUT. CHICAGO 327-XCP.
P-TRAP: 1-1/4" CHROME PLATED CAST BRASS TRAP WITH CLEANOUT AND GROUND JOINT ELBOW AND SLIP NUTS. 1-1/4"CHROME PLATE CAST BRASS EXTENSION TO WALL WITH ESCUTCHEON PLATE. MCGUIRE 8088 AND 1127.
SUPPLIES: 1/2" I.P.S. X 3/8" O.D.CHROME PLATED LOOSE KEY STOP VALVE W/ ESCUTCHEON AND 3/8" COMPRESSION CHROME PLATED FLEXIBLE RISER. CHICAGO 1017.
ROUGH-IN: 2" WASTE, 2" VENT, 1/2" HOT AND COLD WATER. REFER TO ARCHITECTURAL DRAWINGS FOR HEIGHT REQUIREMENTS.

TYPE: L-1 (T.A.S. COMPLIANT FOR ADULTS)
DESCRIPTION: LAVATORY, WALL HUNG, WHITE VITREOUS CHINA, 20½" X 18¼" W/ FRONT OVERFLOW AND CONCEALED ARM SUPPORTS, FAUCET HOLES ON 8" CENTERS. AMERICAN STANDARD "LUCERNE" 0356.015, OR APPROVED EQUAL.
FAUCET: CHROME PLATED BRASS DECK MOUNTED FAUCET WITH 5" SPOUT, 4" WRIST BLADE HANDLES ON 8" CENTERS, QUARTER TURN OPERATING CARTRIDGES, VANDAL RESISTANT 2.2 GPM AERATOR. CHICAGO MODEL 404-317CP-E12VPJKCP.
STRAINER: CHROME PLATED BRASS GRID STRAINER WITH 6" LONG 17 GAUGE 1-1/4" TAILPIECE WITH LOCK NUT. CHICAGO 327-XCP.
P-TRAP: 1-1/4" CHROME PLATED CAST BRASS TRAP WITH CLEANOUT AND GROUND JOINT ELBOW AND SLIP NUTS. 1-1/4"CHROME PLATE CAST BRASS EXTENSION TO WALL WITH ESCUTCHEON PLATE. MCGUIRE 8088 AND 1127.
SUPPLIES: 1/2" I.P.S. X 3/8" O.D.CHROME PLATED LOOSE KEY STOP VALVE W/ ESCUTCHEON AND 3/8" COMPRESSION CHROME PLATED FLEXIBLE RISER. CHICAGO 1017.
ROUGH-IN: 2" WASTE, 2" VENT, 1/2" HOT AND COLD WATER. REFER TO ARCHITECTURAL DRAWINGS FOR HEIGHT REQUIREMENTS.

TYPE: SK-1 (T.A.S. COMPLIANT FOR ADULTS)
DESCRIPTION: SINK, COUNTER MOUNTED, SELF-RIMMING, 20 GAUGE TYPE 304 STAINLESS STEEL, 33" X 21 X 5-3/8" DEEP, DOUBLE COMPARTMENT WITH FAUCET DECK. DRAIN OUTLETS OFF-CENTER TO REAR OF BASIN. THREE FAUCET HOLES ON 4" CENTERS. ELKAY GECR-3321.
FAUCET: CHROME PLATED BRASS DECK MOUNTED FITTING WITH 8" SWING GOOSENECK SPOUT AND 4" WRIST BLADE HANDLES ON 8" CENTERS. QUARTER TURN OPERATING CARTRIDGES, 2.2 GPM AERATOR. CHICAGO MODEL 201-AGN8AE3-317CP.
STRAINER: TWO HEAVY DUTY FORGED STAINLESS STEEL BASKET STRAINERS, EACH WITH 1-1/2" OUTLET, LESS TAILPIECE. MCGUIRE 151A-LT.
P-TRAP: 1-1/2" END OUTLET 16" CENTERS 17 GAUGE CONTINUOUS WASTE WITH CAST BRASS TEE AND SLIP NUTS. MCGUIRE 111C16G17.1-1/2" CHROME PLATED CAST BRASS TRAP WITH CLEANOUT AND GROUND JOINT ELBOW AND SLIP NUTS. 1-1/2"CHROME PLATE CAST BRASS EXTENSION TO WALL WITH ESCUTCHEON PLATE. MCGUIRE 8089 AND 2127.
SUPPLIES: 1/2" I.P.S. X 3/8" O.D.CHROME PLATED LOOSE KEY STOP VALVE WITH ESCUTCHEON AND 3/8" COMPRESSION CHROME PLATED FLEXIBLE RISER. CHICAGO 1017.
ROUGH-IN: 2" WASTE, 2" VENT, 1/2" HOT AND COLD WATER. REFER TO ARCHITECTURAL DRAWINGS FOR HEIGHT REQUIREMENTS.

TYPE: SH-1
DESCRIPTION: BRADLEY WS-1W SINGLE STATION ECONO-WALL SHOWER, STANDARD HEIGHT, THERMOSATIC MIXING VALVE, 1.5 GPM FLOW CONTROL SHOWER HEAD. SHOWER DRAIN SHALL BE MANUFACTURED BY ZURN, WITH HEEL-PROOF STRAINER, NICKEL HEAD, AND SHALL BE VANDAL PROOF.

TYPE: HB-1 - GENERAL USE
DESCRIPTION: HOSE BIBB, 3/4" INLET, CHROME PLATED BRASS, VACUUM BREAKER, REMOVABLE TEE HANDLE. CHICAGO 952.
ROUGH-IN: 3/4" COLD WATER

TYPE: TMV
DESCRIPTION: THERMOSTATIC MIXING VALVE. SCHEDULED ON DRAWINGS.

TYPE: FD-1
SERVICE: TOILET ROOMS AND GENERAL USE
DESCRIPTION: FLOOR DRAIN, BOTTOM OUTLET CAST IRON BODY, ADJUSTABLE 6" DIAMETER NICKEL BRONZE STRAINER WITH VANDAL PROOF SCREWS, INTEGRAL CLAMPING DEVICE. WADE 1100-STD6-1.
TRAP SEAL: PROVIDE PRO-SET SYSTEMS, INC. TRAP GUARD FACTORY FITTED TO MATCH EACH FLOOR DRAIN BY SIZE, MODEL, AND MANUFACTURER.
ROUGH-IN: REFER TO FLOOR PLANS FOR SIZES. COORDINATE FINAL LOCATION AND INSTALLATION WITH ARCHITECTURAL DRAWINGS / FLOOR CONSTRUCTION.

TYPE; FCO
DESCRIPTION: FLOOR CLEANOUT, CAST IRON BODY WITH THREADED ADJUSTABLE HOUSING, FERRULE WITH TAPERED BRASS PLUG, AND ROUND SCORIATED NICKEL BRONZE COVER. PROVIDE CARPET MARKER WHERE REQUIRED. WADE 8130AF.

TYPE: WCO
DESCRIPTION: WALL CLEANOUT. CAST IRON CLEANOUT FERRULE, COUNTERSUNK BRASS PLUG AND ROUND STAINLESS COVER PLATE WITH CENTER SECURING SCREW. PROVIDE CAST IRON CLEANOUT TEE IN LIEU OF FERRULE AS REQUIRED FOR WALL CONSTRUCTION. WADE 8550E OR WADE 8560E WITH WADE 8480R.

TYPE: RVB-1
DESCRIPTION: REFRIGERATOR VALVE BOX, 10-3/4" X 9", 16 GAUGE STEEL WITH EPOXY FINISH, 5/8" O.D. SWEAT CONNECTION. PROVIDE FILTER WHEN MAKING FINAL CONNECTION. GUY GRAY BIM-875 WITH AQUA-PURE AP717 FILTER.
ROUGH-IN: 1/2" COLD WATER

TYPE: ECO
DESCRIPTION: EXTERIOR CLEANOUT TO GRADE, CAST IRON BODY WITH THREADED ADJUSTABLE HOUSING, FERRULE WITH TAPERED BRASS PLUG, AND ROUND SCORIATED CAST IRON TRACTOR TYPE COVER WITH SECURITY SCREWS. IF LOCATED IN ASPHALT OR DIRT PROVIDE 18" X 18" X 12" CONCRETE PAD. WADE 6000Z-179.

TYPE: FCO
DESCRIPTION: FLOOR CLEANOUT, CAST IRON BODY WITH THREADED ADJUSTABLE HOUSING, FERRULE WITH TAPERED BRASS PLUG, AND ROUND SCORIATED NICKEL BRONZE COVER. PROVIDE CARPET MARKER WHERE REQUIRED. WADE 8130AF.

TYPE: TP-1
DESCRIPTION: TRAP PRIMERS SHALL BE PPP MODEL MPB-500 OR APPROVED EQUAL WITH RECYCLE TIMER WITH PRE-SET TIMER OPENING FOR 10 SECONDS EVERY 24 HOURS. DISTRIBUTION MANIFOLD UNITS (DU SERIES) DRAIN OUTLET: 5/8" AND 1/2" COMPRESSION FITTINGS. SAEJ512-1/2 FEMALE NPT ANSI/ASME B1.20.1 CIRCUIT BREAKER, TEST SWITCH, TIMER SOLENOID VALVE UP LISTED. ELECTRICAL ASSEMBLY LISTED PER UL#73. TERMPERATURE/PRESSURE: 32F TO 125 F, 20 PSI - 150 PSI, MIN. 2 OZ WATER AT 20 PSI PER DRAIN SERVED. WITH ACCESS DOOR.

TYPE: WC-1 (T.A.S. COMPLIANT DEPENDING UPON MOUNTING HEIGHT)
DESCRIPTION: 2467.100 'AMERICAN STANDARD' 17" HEIGHT, ELONGATED BOWL, VITREOUS CHINA "CADET" 295C 'CHURCH' WHITE, SOLID PLASTIC, OPEN FRONT SEAT W/ A STAINLESS STEEL CHECK HINGE. WATER CLOSET RIM HEIGHT SHALL BY 17" ABOVE FINISHED FLOOR LEVEL. CONTRACTOR TO CONFIRM WATER PRESSURE IS SUFFICINET TO OPERATE FLUSH TANK, PER MANUFACTURE'S REQUIREMENTS.
SEAT: ELONGATED OPEN FRONT WHITE PLASTIC SEAT WITH SELF-SUSTAINING CHECK HINGES. OLSONITE 95SSC.
CARRIER: WADE VERTICAL SERIES W-340, OR HORIZONTAL SERIES W-310.
ROUGH-IN: 4" WASTE, 2" VENT, 1" COLD WATER. REFER TO ARCHITECTURAL DRAWINGS FOR HEIGHT REQUIREMENTS.

GENERAL NOTES:

ALL LAVATORIES AND SINKS SHALL BE SUPPLIED WITH HOT AND COLD WATER TO FAUCETS AS INDICATED ON PLANS AND FIXTURE SCHEDULE. PROVIDE CHROME PLATED BRASS SUPPLY STOPS WITH LOOSE KEYS AND WALL ESCUTCHEONS. PROVIDE CHROME PLATED FLEXIBLE RISERS OF SIZE REQUIRED TO PROPERLY CONNECT FIXTURES. PROVIDE 17 GAUGE CHROME PLATED CAST BRASS P- TRAP WITH CLEANOUT AND EXTENSION TO WALL WITH ESCUTCHEON. REFER TO FIXTURE SCHEDULE FOR MINIMUM SIZES OF PLUMBING FIXTURE ROUGH-INS.

PROVIDE MOLDED CLOSED CELL ANTI-MICROBIAL VINYL INSULATION KITS AT ALL LAVATORIES AND SINKS REQUIRED TO BE T.A.S. ACCESSIBLE (TRUEBRO LAV-GUARD 2 SERIES). ALL SUCH FIXTURES AND FINAL INSTALLATIONS SHALL COMPLY WITH THE STATE ACCESSIBILITY STANDARDS REQUIREMENTS.

STATE OF TEXAS
NORMAN S. HOFFMAN
95483
LICENSED
PROFESSIONAL ENGINEER

The seal appearing on this document was authorized by NORMAN HOFFMAN P.E. 95483 12/7/2017

GALVESTON COUNTY
BEACH PAVILION
CRYSTAL BEACH, TX 77650

BE-Arc LLC Project No : C-13-007.01

bis Engineering
REG # F-11156
P.O. Box 1373
Galveston, Tx. 77555
PH 409.621.6740
THIS PRINT IS THE PROPERTY OF BIS ENGINEERING IT MAY NOT BE TRACED, OR REPRODUCED IN ANY FORM OR MANNER WHATSOEVER, NOR LOANED OUT, OR BE SUBMITTED WITHOUT PRIOR WRITTEN CONSENT FROM BIS ENGINEERING.

BRAX EASTERWOOD
DESIGN
2728 AVENUE Q SUITE 2
GALVESTON TEXAS 77550
PHONE 409-354-8976
EASTERWOOD@BEAIA.COM

FOR PERMIT

DATE	REVISION

DESIGN DEVELOPMENT

DATE ISSUED:
12/7/2017

COPYRIGHT 2017

P4.1

COUNTY APPROVAL:
SIGNATURE _____ DATE_____

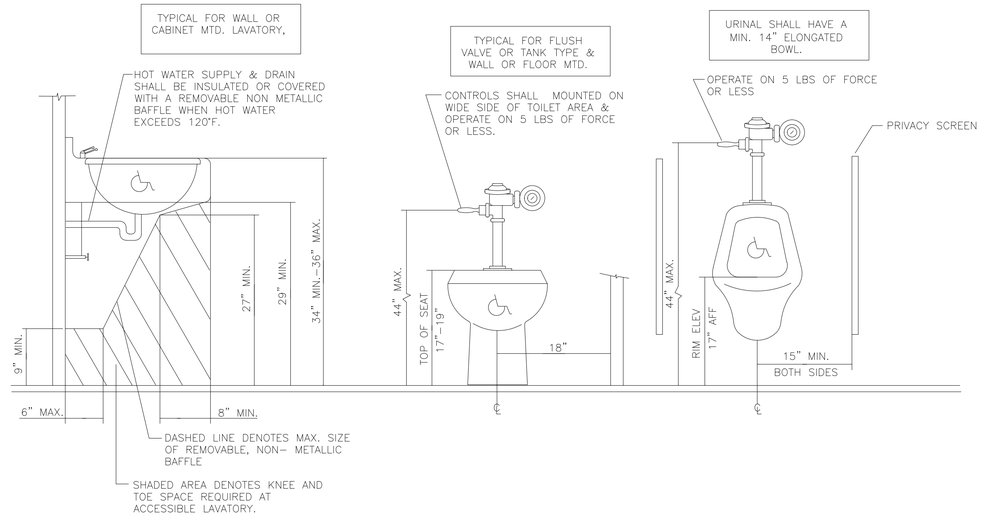

1/P4.0 NOT USED
Scale: N.T.S.

4/P4.0 HANDICAP PLUMBING FIXTURE INSTALLATION
Scale: N.T.S.

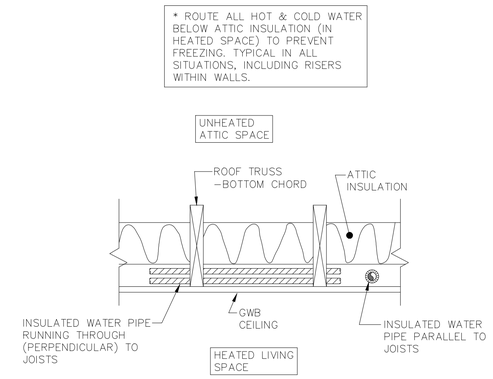

9/P4.0 WATER PIPING ROUTED IN ATTIC DETAIL
Scale: N.T.S.

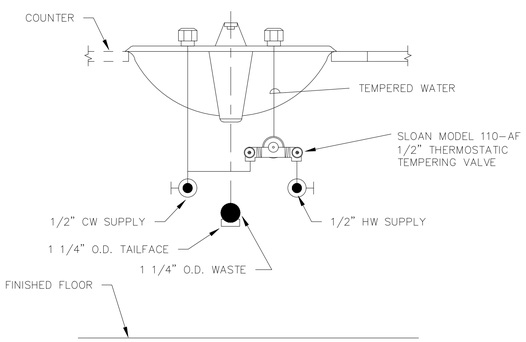

2/P4.0 LOCAL MIXING VALVE DETAIL
Scale: N.T.S.

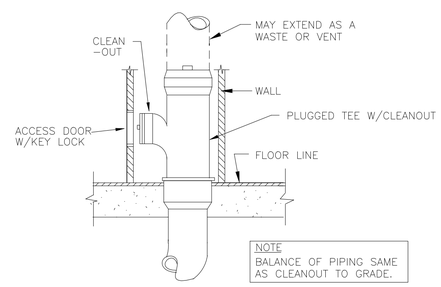

5/P4.0 WALL CLEANOUT DETAIL
Scale: N.T.S.

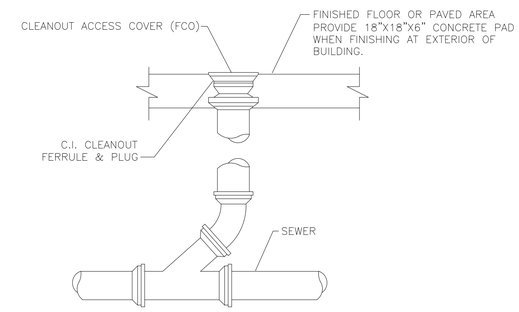

7/P4.0 CLEANOUT DETAIL
Scale: N.T.S.

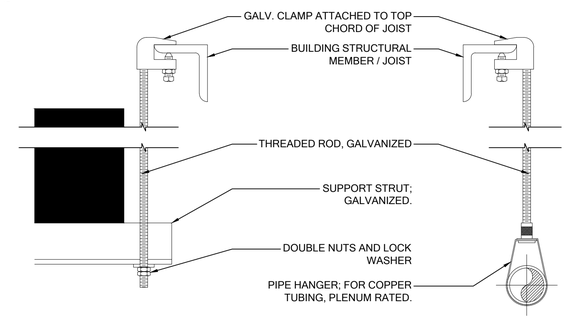

3 PIPE SUPPORT
SCALE: NONE

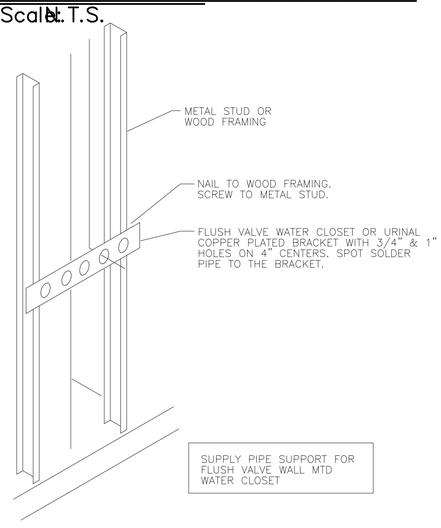

3/P4.0 WATER CLOSET/ URINAL PIPE SUPPORT DETAIL
Scale: N.T.S.

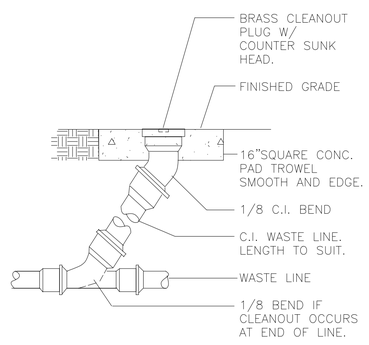

6/P4.0 CLEANOUT TO GRADE
Scale: N.T.S.

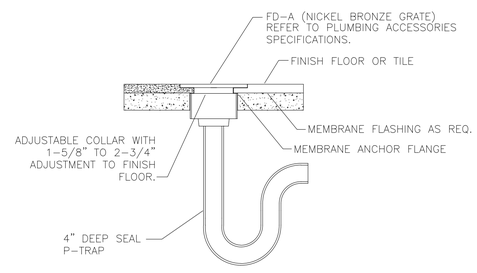

8/P4.0 TOILET AREA FLOOR DRAIN
Scale: N.T.S.

STATE OF TEXAS
NORMAN S. HOFFMAN
95483
LICENSED
PROFESSIONAL ENGINEER

The seal appearing on this document was authorized by NORMAN HOFFMAN P.E. 95483 12/7/2017

GALVESTON COUNTY BEACH PAVILION CRYSTAL BEACH, TX 77650

BE-Arc LLC Project No : C-13-007.01

BIS Engineering
REG # F-11156
P.O. Box 1575
Galveston, Texas 77555
PH 409.621.5740

THIS PRINT IS NOT TO BE SCALED OR DIMENSIONED. IT MUST NOT BE TRACED OR REPRODUCED IN ANY FORM OR MANNER WHATSOever TO ANY THIRD PARTY OR IT BE SUBMITTED WITHOUT PRIOR WRITTEN CONSENT FROM BIS ENGINEERING.

BRAX EASTERWOOD
DESIGN
2728 AVENUE Q SUITE 2
GALVESTON TEXAS 77550
PHONE 409-354-8976
EASTERWOOD@GEAIA.COM

FOR PERMIT

DATE	REVISION

DESIGN DEVELOPMENT

DATE ISSUED:
12/7/2017

COPYRIGHT 2017

P5.0.

COUNTY APPROVAL:
SIGNATURE _____ DATE_____

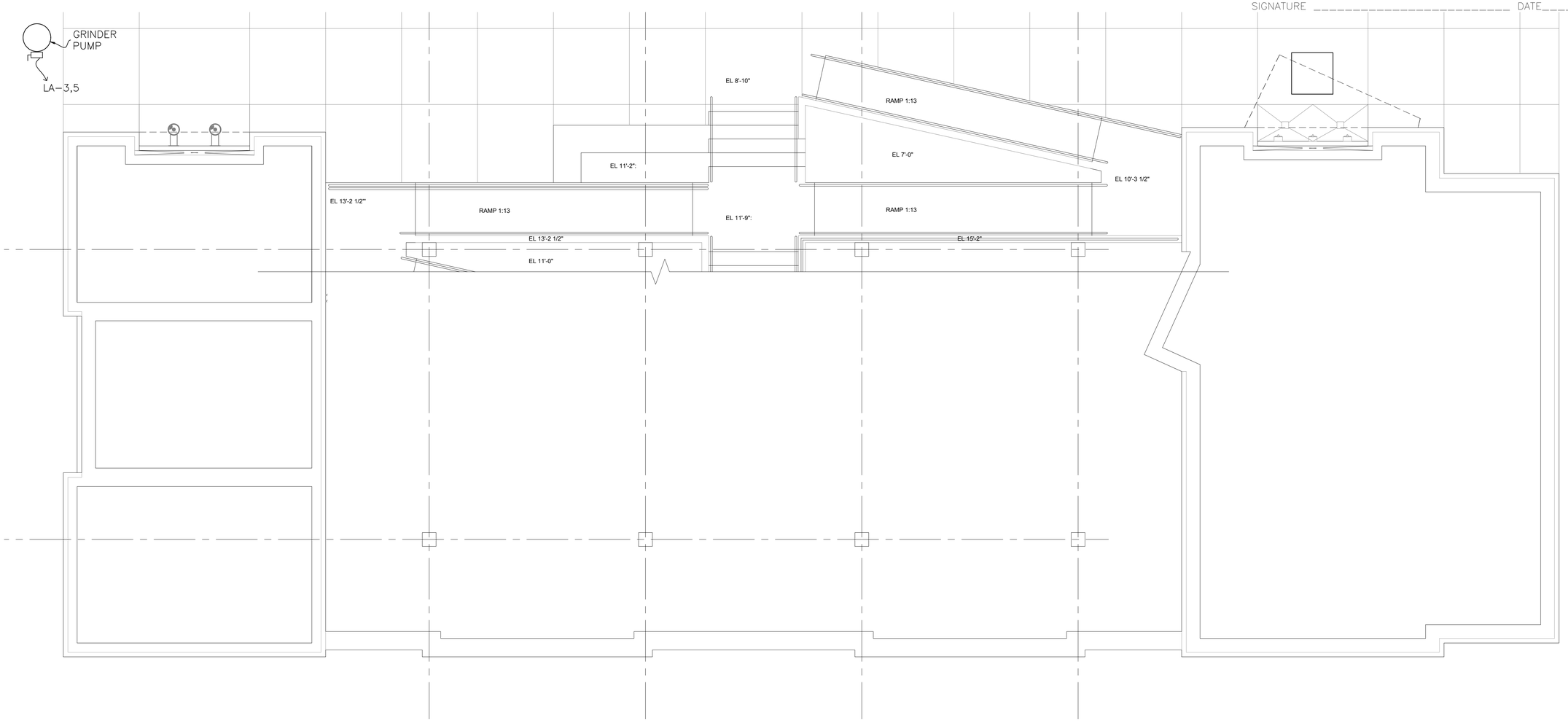

1 LOWER LEVEL
POWER & LIGHTING PLAN
SCALE: 1/4" = 1'-0"

STATE OF TEXAS
JANET MURRAY HOFFMAN
102117
LICENSED
PROFESSIONAL ENGINEER

The seal appearing on this document was authorized by JANET MURRAY HOFFMAN P.E. 102117 12/7/2017

GALVESTON COUNTY BEACH PAVILION CRYSTAL BEACH, TX 77650

BE-Arc LLC Project No : C-13-007.01

bis Engineering
REG # F-11156
P.O. Box 1573
Galveston, TX 77555
PH 409.621.5740

THIS PRINT IS THE PROPERTY OF BIS ENGINEERING IT MAYS NOT BE TRACED, OR REPRODUCED IN ANY FORM OR MANNER WHATSOEVER, NOR LOANED TO ANY PERSON OR FIRM, IT BE SUBMITTED WITHOUT PRIOR WRITTEN CONSENT FROM BIS ENGINEERING.

BRAX EASTERWOOD
DESIGN
2728 AVENUE Q SUITE 2
GALVESTON TEXAS 77550
PHONE 409-354-8976
EASTERWOOD@BEAIA.COM

FOR PERMIT

DATE	REVISION

DESIGN DEVELOPMENT

DATE ISSUED:
12/7/2017

COPYRIGHT 2017

E1.0

COUNTY APPROVAL:
SIGNATURE _____ DATE_____

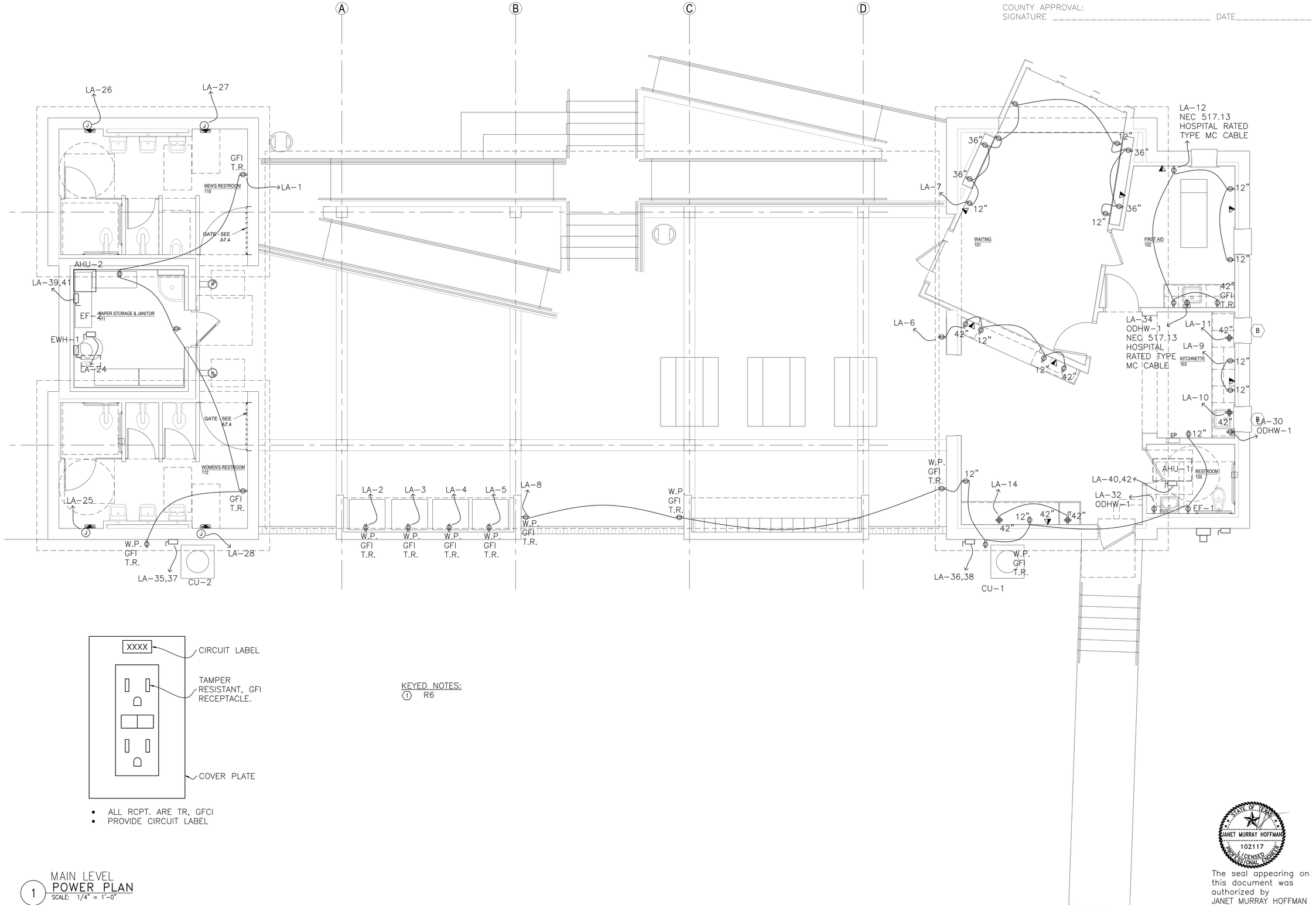

- ALL RCPT. ARE TR, GFCI
- PROVIDE CIRCUIT LABEL

KEYED NOTES:
1. R6

1 MAIN LEVEL POWER PLAN
SCALE: 1/4" = 1'-0"

STATE OF TEXAS
JANET MURRAY HOFFMAN
102117
LICENSED PROFESSIONAL ENGINEER

The seal appearing on this document was authorized by JANET MURRAY HOFFMAN P.E. 102117 12/7/2017

GALVESTON COUNTY
BEACH PAVILION
CRYSTAL BEACH, TX 77650

BE-Arc LLC Project No : C-13-007.01

bis Engineering
REG # F-11156
P.O. Box 1373
Galveston, Texas 77555
PH 409.621.5740
THIS PRODUCT IS THE PROPERTY OF BIS ENGINEERING IT MAYS NOT BE TRACED, OR REPRODUCED, IN WHOLE OR IN PART, IT BE SUBMITTED WITHOUT PRIOR WRITTEN CONSENT FROM BIS ENGINEERING.

BRAX EASTERWOOD
DESIGN
2728 AVENUE Q SUITE 2
GALVESTON TEXAS 77550
PHONE 409-354-8976
EASTERWOOD@BEAIA.COM

FOR PERMIT

DATE	REVISION

DESIGN DEVELOPMENT

DATE ISSUED:
12/7/2017

COPYRIGHT 2017

E1.1

COUNTY APPROVAL:
SIGNATURE _____ DATE_____

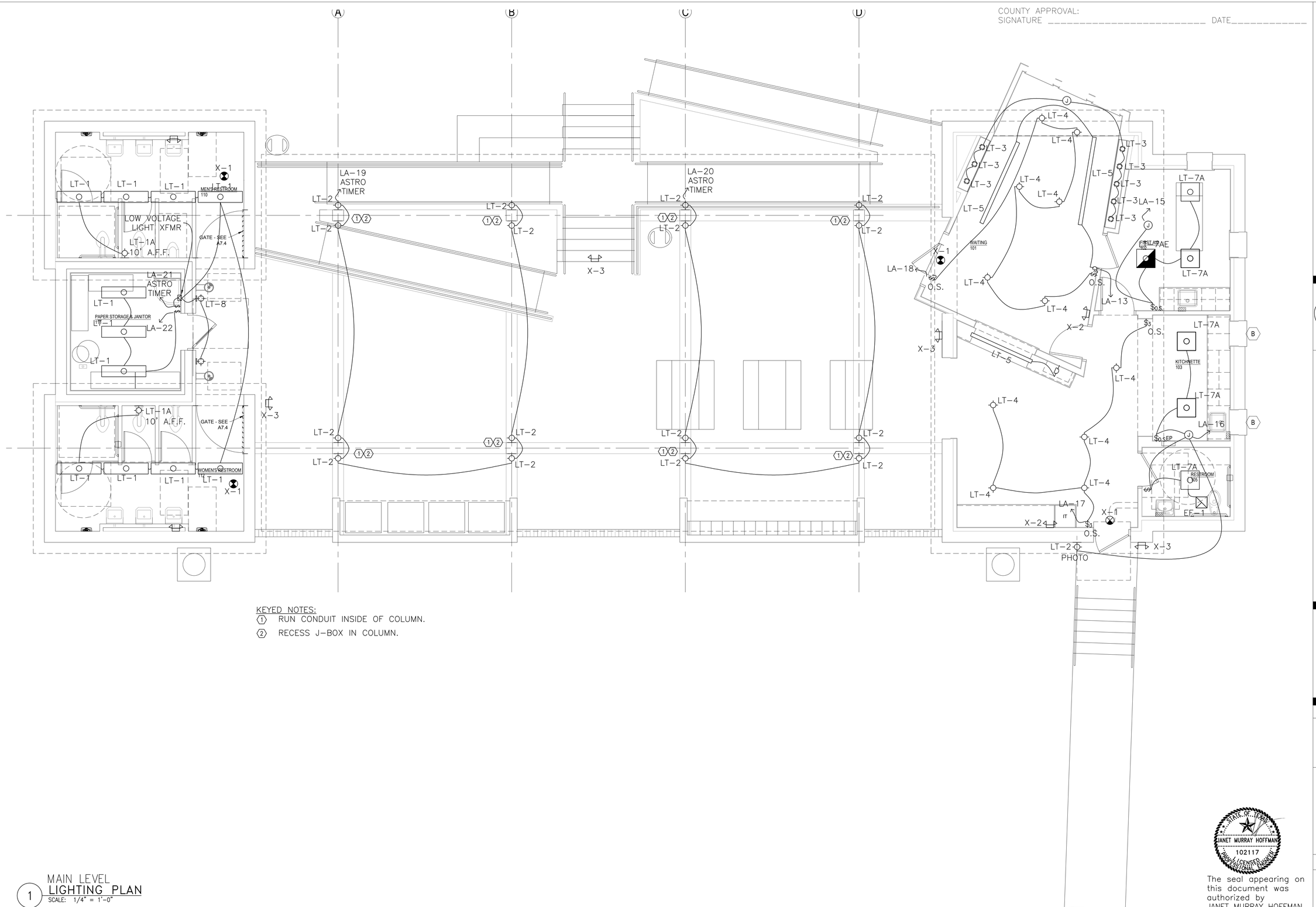

KEYED NOTES:

1. RUN CONDUIT INSIDE OF COLUMN.
2. RECESS J-BOX IN COLUMN.

1 MAIN LEVEL
LIGHTING PLAN
SCALE: 1/4" = 1'-0"

STATE OF TEXAS
JANET MURRAY HOFFMAN
102117
LICENSED
PROFESSIONAL ENGINEER

The seal appearing on this document was authorized by JANET MURRAY HOFFMAN P.E. 102117 12/7/2017

GALVESTON COUNTY
BEACH PAVILION
CRYSTAL BEACH, TX 77650

BE-Arc LLC Project No : C-13-007.01

bis Engineering
REG # F-11156
P.O. Box 1371
Galveston, Texas 77555
PH 409.621.5740

THIS PRINT IS THE PROPERTY OF BIS ENGINEERING IT MAY NOT BE TRACED, OR REPRODUCED IN ANY FORM OR MANNER WHATSOEVER, NOR LOANED TO ANY PERSON OR FIRM, OR BE SUBMITTED WITHOUT PRIOR WRITTEN CONSENT FROM BIS ENGINEERING.

BRAX EASTERWOOD
DESIGN
2728 AVENUE Q SUITE 2
GALVESTON TEXAS 77550
PHONE 409-354-8976
EASTERWOOD@BEAIA.COM

FOR PERMIT

DATE	REVISION

DESIGN DEVELOPMENT

DATE ISSUED:
12/7/2017

COPYRIGHT 2017

E1.2

COUNTY APPROVAL:
SIGNATURE _____ DATE_____

Panel Schedule
LA

Source Information:
Size:
Impedance:
Xfmr AIC:
Voltage Pri:
Voltage Sec: 240 / 120 V
Phase: 1

Enclosure Information:
NEMA: Type 1
Main Connection: breaker
Ground Buss: Yes
Neutral Buss: Yes
CT Meter: No
Entrance: Bottom

Circuit Information:
Circuits: 42 / 42
Voltage: 120 / 240
System: 1Ø,
Hertz: 60

Protection Information:
Frame Size: 200A
Load (A): 122
% Factor: 160
OCPD Size: 200A

Conductor Information:
Conductor: 2-4/0 ga.
Neutral: 1-4/0 ga.
Ground: 1-6 ga.
Insulation: THHN
Material: Copper
Raceway: PVC-40

					Load - kVA			Load - kVA								
Ct#	Load Description	Rway Size	Cdtr Size	OCPD Size	AØ	BØ	CØ	L	CØ	BØ	AØ	OCPD Size	Cdtr Size	Rway Size	Load Description	Ct#
1	RCPT		(1) 12 ga.	20A /1	0.72			L1			0.72	20A /1	(1) 12 ga.		RCPT	2
3	GRINDER		(2) 12 ga.	20A /2				L2		0.72		20A /1	(1) 12 ga.		RCPT	4
5	---							L1			0.9	20A /1	(1) 12 ga.		RCPT	6
7	RCPT		(1) 12 ga.	20A /1		0.72		L2		1.44		20A /1	(1) 12 ga.		RCPT	8
9	RCPT		(1) 12 ga.	20A /1	0.36			L1			0.36	20A /1	(1) 12 ga.		RCPT	10
11	RCPT TIMERS		(1) 12 ga.	20A /1		0.36		L2		0.9		20A /1	(1) 12 ga.		MEDICAL RCPT	12
13	TRACK LTS		(1) 12 ga.	20A /1	1.8			L1			0.18	20A /1	(1) 12 ga.		SPARE	14
15	MEDICAL LTS		(1) 12 ga.	20A /1		0.88		L2		0.88		20A /1	(1) 12 ga.		LTS	16
17	LTS		(1) 12 ga.	20A /1	0.88			L1			0.88	20A /1	(1) 12 ga.		LTS	18
19	LTS		(1) 12 ga.	20A /1		0.88		L2		0.88		20A /1	(1) 12 ga.		LTS	20
21	LTS		(1) 12 ga.	20A /1	0.88			L1			0.88	20A /1	(1) 12 ga.		LTS	22
23	EMERGENCY LTS (NON MEDICAL)		(1) 12 ga.	20A /1		0.88		L2				20A /1	(1) 12 ga.		EF-2	24
25	HAND DRYER		(1) 12 ga.	20A /1	1.2			L1			1.2	20A /1	(1) 12 ga.		HAND DRYER	26
27	HAND DRYER		(1) 12 ga.	20A /1		1.2		L2		1.2		20A /1	(1) 12 ga.		HAND DRYER	28
29	RCPT		(1) 12 ga.	20A /1	0.36			L1			1.2	20A /1	(1) 12 ga.		IHW KITCHEN	30
31	EHW-1		(2) 12 ga.	20A /2		1.25		L2		1.2		20A /1	(1) 12 ga.		IHW BATH	32
33	---				1.25			L1			1.2	20A /1	(1) 12 ga.		MEDICAL IHW SINK	34
35	CU-2		(2) 12 ga.	20A /2		1.6		L2		3.2		35A /2	(2) 8 ga.		CU-1	36
37	---				1.6			L1			3.2				---	38
39	AHU-2		(2) 10 ga.	30A /2				L2				45A /2	(2) 8 ga.		AHU-1	40
41	---							L1							---	42
	Phase Totals - kVA:				9.05	7.77				10.42	10.72					

Load Balance:

PhaseA:	PhaseB:
19.77 kVA	18.19 kVA

Phase Balance Differential: 9.25%

Load Totals:

	Amps:	kW:	kVA:
Connected Load:	166.29	33.40	37.91
w/ Demand Factors:	121.63	23.49	26.69

LA — Load Summary

Service Characterization :
Computation Method : Office / Per Maximum Phase Load Method
NEC Table : 310.16
OCPD Size : Std-200A-2P-240VAC — 1 Phase
OCPD Increase Factor : 160%
L-L Voltage : 240 VAC — L-N Voltage : 120 VAC
Current-Carrying Conductors : 2 - 4/0 ga. THHN Copper conductors
Ground Conductors : 1 - 6 ga. THHN Copper conductor
Neutral Conductors : 1 - 4/0 ga. THHN Copper conductor

Service Load Characteristics :
Gross Amperes : 121.63 (A)
Gross Kilowatts : 23.49 (kW)
Gross Volt Amperes : 26,692 (VA)
Gross Kilovolt Amperes : 26.69 (kVA)

Phase Load Balance :
Phase A : 17.51 kW
Phase B : 15.89 kW
Balance Differential Percentage : 9.25%

OCPD Summary : **Service Size Computation Method : Office**

	Line	Neutral	Notes
General Lighting Load :			
Inductive Lighting Load :	1,800.00 VA	1,800.00 VA	1 - circuit(s)
Total Load :	1,800.00 VA	1,800.00 VA	
Total Load with Demand Factor:	**1,800.00 VA**	**1,800.00 VA**	per NEC 220.42, 220.52(A) & (B)
Receptacle Load :			
Continuous Load :	15,615.00 VA	15,615.00 VA	21 - circuit(s)
Total Load :	15,615.00 VA	15,615.00 VA	
Total Load with Demand Factor:	**12,807.00 VA**	**12,807.00 VA**	per NEC 220.44
Motor Load :			
Motor Load :	3.25 VA	3.25 VA	2 - circuit(s)
25% of Largest Motor* :	1,598.57 VA	1,598.57 VA	per NEC 220.18(A)
Total Load :	**1,601.82 VA**	**1,601.82 VA**	
Environmental Load :			
Heater Load :	10,900.00 VA	10,900.00 VA	8 - circuit(s)
A/C Load :	9,591.43 VA	9,591.43 VA	2 - circuit(s)
Applied Load:	**10,900.00 VA**	**10,900.00 VA**	NEC 220.60
	27,109.00 VA	**27,109.00 VA**	
Totals :	**122.00 A**	**122.00 A**	

* Largest motor load is derived from CU-1

Items not included in panel load summary computations :
1. AHU-2 - 240 VAC, 1Ø, 20.83 A
2. AHU-1 - 240 VAC, 1Ø, 37.50 A

Ampacity Formula
The total load in amperes is computed from the summation of each item utilizing the following formula:
Amperes = (item kW * 1000) / (panel Voltage * item power factor * item efficiency factor * square root of the panel phase)

Reprinted with permission from NFPA 70 2008, NEC copyright © 2008, National Fire Protection Association. This is not the complete and official position of the NFPA on the referenced subject which is represented only by the standard in its entirety.
The title National Electric Code and the acronym NEC are registered trademarks of the National Fire Protection Association(NFPA).

STATE OF TEXAS
JANET MURRAY HOFFMAN
102117
LICENSED PROFESSIONAL ENGINEER

The seal appearing on this document was authorized by JANET MURRAY HOFFMAN P.E. 102117 12/7/2017

Low Voltage Momentary Short Circuit Analysis Report
Per Unit Method - IEEE Standards 141, 242

Monday, Sep. 25, 2017

Supplied Information and Base Values

Utility Co.: UTILITY
XFMR Type: Single Phase
75 kVA, 1Ø, 60Hz
Voltages: 13,200V pri / 240V sec
Impedance: 1.2%
Tolerance: 7.5%
XR Ratio: 1.8

Utility Line Starting Power: 1,000 MVA
Base Line Voltage: 13.2 kV
Base Transformer Power: 75 kVA
Base XR Ratio: 1.8
Cables' Resistence (R) Computed At: 25ºC
Available Fault L-L: 28.153 kA
Available Fault L-G: 20 kA

			Maximum Fault Amperes		Protection Values	
Item Name	Ø	Voltage	Symmetrical	Asymmetrical	OCPD Type	Duty Amperes
• **LA**	1	240	10,456.5	10,856.7	LVPCB MCCB 10-20 kA MCCB > 20 kA	10,456.5 14,430 15,998.4
AHU-1	1	240	2,011.9	2,014.8	LVPCB MCCB 10-20 kA MCCB > 20 kA	2,011.9 2,776.4 3,078.2
AHU-2	1	240	1,364.7	1,365.6	LVPCB MCCB 10-20 kA MCCB > 20 kA	1,364.7 1,883.3 2,088.1
CU-1	1	240	3,542.4	3,558.2	LVPCB MCCB 10-20 kA MCCB > 20 kA	3,542.4 4,888.5 5,419.9
CU-2	1	240	1,609.3	1,610.8	LVPCB MCCB 10-20 kA MCCB > 20 kA	1,609.3 2,220.8 2,462.2
EHW-1	1	240	902	902.3	LVPCB MCCB 10-20 kA MCCB > 20 kA	902 1,244.8 1,380.1
IHW KITCHEN	1	120	471.3	471.4	LVPCB MCCB 10-20 kA MCCB > 20 kA	471.3 650.5 721.2
MEDICAL IHW SINK	1	120	471.3	471.4	LVPCB MCCB 10-20 kA MCCB > 20 kA	471.3 650.5 721.2
IHW BATH	1	120	471.3	471.4	LVPCB MCCB 10-20 kA MCCB > 20 kA	471.3 650.5 721.2
SPARE	1	120	471.3	471.4	LVPCB MCCB 10-20 kA MCCB > 20 kA	471.3 650.5 721.2
HAND DRYER	1	120	471.3	471.4	LVPCB MCCB 10-20 kA MCCB > 20 kA	471.3 650.5 721.2
HAND DRYER	1	120	471.3	471.4	LVPCB MCCB 10-20 kA MCCB > 20 kA	471.3 650.5 721.2
HAND DRYER	1	120	471.3	471.4	LVPCB MCCB 10-20 kA MCCB > 20 kA	471.3 650.5 721.2

Low Voltage Momentary Short Circuit Analysis Report
Per Unit Method - IEEE Standards 141, 242

Monday, Sep. 25, 2017

			Maximum Fault Amperes		Protection Values	
Item Name	Ø	Voltage	Symmetrical	Asymmetrical	OCPD Type	Duty Amperes
HAND DRYER	1	120	471.3	471.4	LVPCB MCCB 10-20 kA MCCB > 20 kA	471.3 650.5 721.2
EF-2	1	120	1,542	1,543.3	LVPCB MCCB 10-20 kA MCCB > 20 kA	1,542 2,128 2,359.3
EMERGENCY LTS (NON MEDICAL)	1	120	471.3	471.4	LVPCB MCCB 10-20 kA MCCB > 20 kA	471.3 650.5 721.2
LTS	1	120	471.3	471.4	LVPCB MCCB 10-20 kA MCCB > 20 kA	471.3 650.5 721.2
LTS	1	120	471.3	471.4	LVPCB MCCB 10-20 kA MCCB > 20 kA	471.3 650.5 721.2
LTS	1	120	471.3	471.4	LVPCB MCCB 10-20 kA MCCB > 20 kA	471.3 650.5 721.2
LTS	1	120	471.3	471.4	LVPCB MCCB 10-20 kA MCCB > 20 kA	471.3 650.5 721.2
LTS	1	120	471.3	471.4	LVPCB MCCB 10-20 kA MCCB > 20 kA	471.3 650.5 721.2
LTS	1	120	471.3	471.4	LVPCB MCCB 10-20 kA MCCB > 20 kA	471.3 650.5 721.2
LTS	1	120	471.3	471.4	LVPCB MCCB 10-20 kA MCCB > 20 kA	471.3 650.5 721.2
MEDICAL LTS	1	120	471.3	471.4	LVPCB MCCB 10-20 kA MCCB > 20 kA	471.3 650.5 721.2
RCPT TIMERS	1	120	471.3	471.4	LVPCB MCCB 10-20 kA MCCB > 20 kA	471.3 650.5 721.2
TRACK LTS	1	120	471.3	471.4	LVPCB MCCB 10-20 kA MCCB > 20 kA	471.3 650.5 721.2
MEDICAL RCPT	1	120	471.3	471.4	LVPCB MCCB 10-20 kA MCCB > 20 kA	471.3 650.5 721.2
RCPT	1	120	471.3	471.4	LVPCB MCCB 10-20 kA MCCB > 20 kA	471.3 650.5 721.2
RCPT	1	120	471.3	471.4	LVPCB MCCB 10-20 kA MCCB > 20 kA	471.3 650.5 721.2

Low Voltage Momentary Short Circuit Analysis Report
Per Unit Method - IEEE Standards 141, 242

Monday, Sep. 25, 2017

			Maximum Fault Amperes		Protection Values	
Item Name	Ø	Voltage	Symmetrical	Asymmetrical	OCPD Type	Duty Amperes
RCPT	1	120	471.3	471.4	LVPCB MCCB 10-20 kA MCCB > 20 kA	471.3 650.5 721.2
RCPT	1	120	471.3	471.4	LVPCB MCCB 10-20 kA MCCB > 20 kA	471.3 650.5 721.2
RCPT	1	120	471.3	471.4	LVPCB MCCB 10-20 kA MCCB > 20 kA	471.3 650.5 721.2
RCPT	1	120	471.3	471.4	LVPCB MCCB 10-20 kA MCCB > 20 kA	471.3 650.5 721.2
RCPT	1	120	471.3	471.4	LVPCB MCCB 10-20 kA MCCB > 20 kA	471.3 650.5 721.2
GRINDER	1	240	1,542	1,543.3	LVPCB MCCB 10-20 kA MCCB > 20 kA	1,542 2,128 2,359.3
RCPT	1	120	471.3	471.4	LVPCB MCCB 10-20 kA MCCB > 20 kA	471.3 650.5 721.2
RCPT	1	120	471.3	471.4	LVPCB MCCB 10-20 kA MCCB > 20 kA	471.3 650.5 721.2

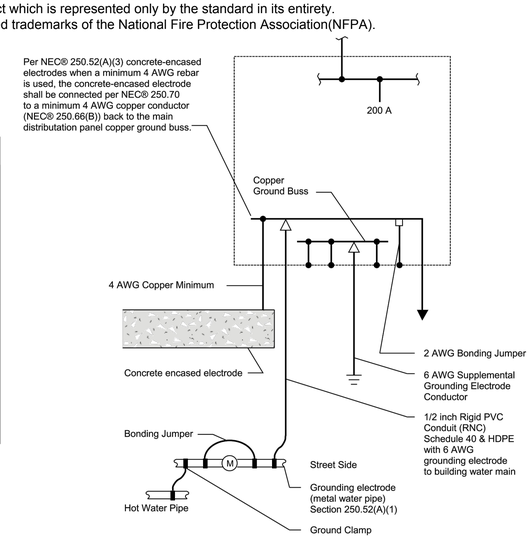

GALVESTON COUNTY
BEACH PAVILION
CRYSTAL BEACH, TX 77650

BE-Arc LLC Project No : C-13-007.01

bis Engineering
REG # F-11156
P.O. Box 1373
Galveston, TX 77553
PH 409.621.6740
THIS PRINT IS PROPERTY OF BIS ENGINEERING IT MAY NOT BE TRACED, OR REPRODUCED IN ANY FORM OR MANNER WHATSOEVER, NOR LOANED OUT, OR RE SUBMITTED WITHOUT PRIOR WRITTEN CONSENT FROM BIS ENGINEERING.

BRAX EASTERWOOD
DESIGN
2728 AVENUE Q SUITE 2
GALVESTON TEXAS 77550
PHONE 409-354-8976
EASTERWOOD@BEAIA.COM

FOR PERMIT

DATE	REVISION

DESIGN DEVELOPMENT

DATE ISSUED:
12/7/2017

COPYRIGHT 2017

E2.0

COUNTY APPROVAL:
SIGNATURE _____ DATE_____

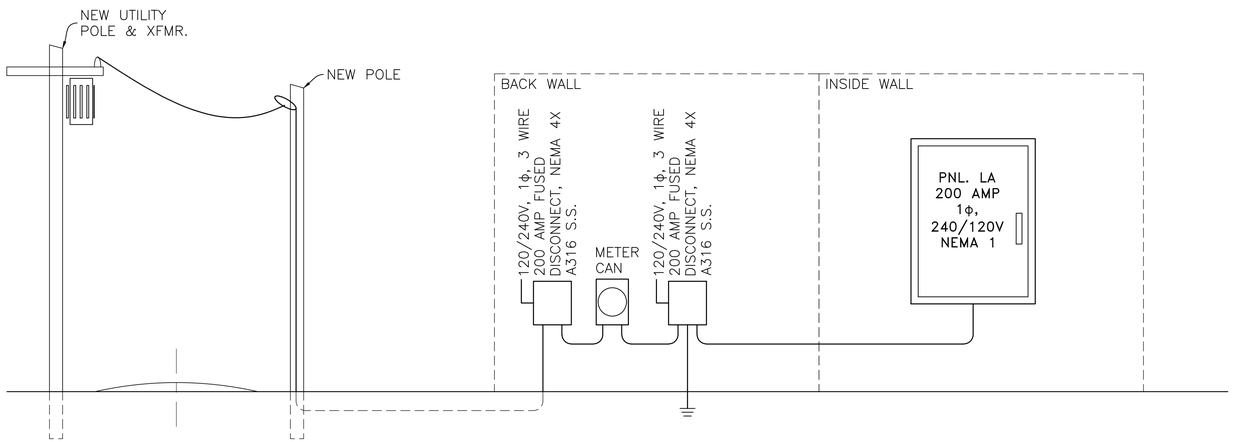

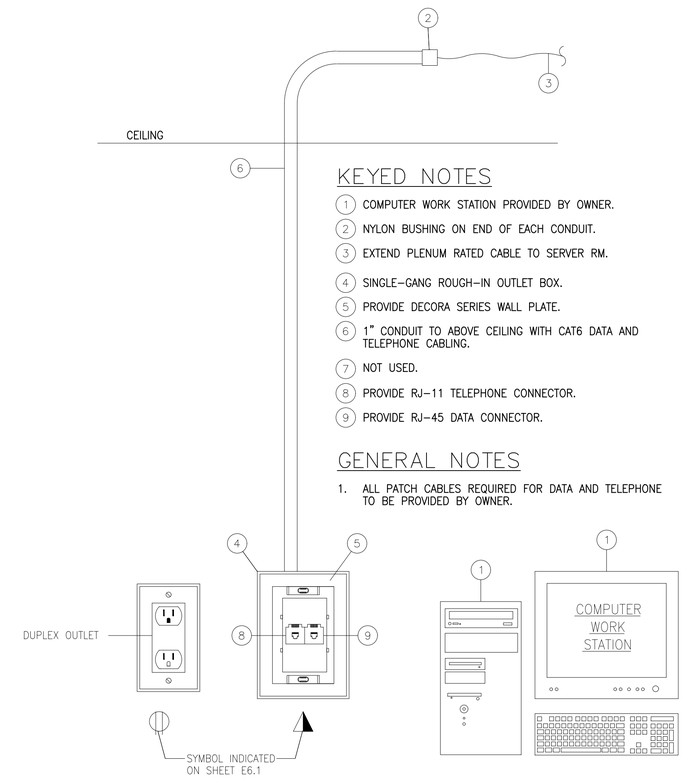

KEYED NOTES

1. COMPUTER WORK STATION PROVIDED BY OWNER.
2. NYLON BUSHING ON END OF EACH CONDUIT.
3. EXTEND PLENUM RATED CABLE TO SERVER RM.
4. SINGLE-GANG ROUGH-IN OUTLET BOX.
5. PROVIDE DECORA SERIES WALL PLATE.
6. 1" CONDUIT TO ABOVE CEILING WITH CAT6 DATA AND TELEPHONE CABLING.
7. NOT USED.
8. PROVIDE RJ-11 TELEPHONE CONNECTOR.
9. PROVIDE RJ-45 DATA CONNECTOR.

GENERAL NOTES

1. ALL PATCH CABLES REQUIRED FOR DATA AND TELEPHONE TO BE PROVIDED BY OWNER.

STATE OF TEXAS
JANET MURRAY HOFFMAN
102117
LICENSED
PROFESSIONAL ENGINEER

The seal appearing on this document was authorized by JANET MURRAY HOFFMAN P.E. 102117 12/7/2017

GALVESTON COUNTY
BEACH PAVILION
CRYSTAL BEACH, TX 77650

BE-Arc LLC Project No : C-13-007.01

bis Engineering
REG # F-11156
P.O. Box 1375
Galveston, TX 77555
PH 409.621.6740
THIS PRINT IS THE PROPERTY OF BIS ENGINEERING IT MAY NOT BE TRACED, OR REPRODUCED, IN WHOLE OR IN PART, OR BE SUBMITTED WITHOUT PRIOR WRITTEN CONSENT FROM BIS ENGINEERING.

BRAX EASTERWOOD
DESIGN
2728 AVENUE Q SUITE 2
GALVESTON TEXAS 77550
PHONE 409-354-8976
EASTERWOOD@BEAIA.COM

FOR PERMIT

DATE	REVISION

DESIGN DEVELOPMENT

DATE ISSUED:
12/7/2017

COPYRIGHT 2017

E2.1

ELECTRICAL SPECIFICATIONS

ELECTRICAL CONDUCTORS

A. MANUFACTURERS: SUBJECT TO COMPLICANCE W/ REQUIREMENTS, PROVIDE BY ONE OF THE FOLLOWING:

ALCAN PRODUCTS CORPORATION; ALCAN CABE DIVISION.

AMERICAN INSULATED WIRE CORP.; A LEVITON COMPANY.

GENERAL CABLE CORPORATION.

SENATOR WIRE & CABLE COMPANY.

SOUTHWIRE COMPANY.

COPER CONDUCTORS: COMPLY W/ NEMA WC 70.

CONDUCTOR INSULATION: COMPLY W/ NEMA WC 70 FOR TYPES THW, THHN-THWN, XHHW, UF, USE, AND SO.

MULTICONDUCTOR CABE: COMPLY W/ NEMA WC 70 FOR ARMORED CABLE, TYPE AC,METAL-CLAD CABLE, TYPE MC, TYPE SO, AND TYPE USE W; FROUND WIRE.

B. CONDUCTOR MATERIAL APPLICATIONS:

COPPER. SOLID FOR NO. 10 AWG AND SMALLER; STRANDED FOR NO. 8 & LARGER.

C. CONDUCTOR INSULATION & MULTICONDUCTOR CABLE APPLICATIONS & WIRING METHODS

1. SERVICE ENTRANCE: TYPE THHN-THWN, SINGLE CONDUCTORS IN RACEWAY, TYPE SE OR USE MULTICONDUCTOR CABLE.
2. EXPOSED FEEDERS: TYPE THHN-THWN, SINGE CONDUCTORS IN RACEWAY.
3. FEEDERS CONCEALED IN CEILING, WALLS, PARTITIONS, & CRAWLSPACES: TYPE THHN-THWN, SINGLE CONDUCTORS IN RACEWAY.
4. FEEDER CONCEALED IN CONCRETE, BELOW SLABS-ON GRADE, & UNDERGROUND: TYPE THHN-THWN, SINGLE CONDUCTORS IN RACEWAY.
5. FEEDERS INSTALLED BELOW RAISED FLOORING: TYPE THHN-THWN, SINGLE CONDUCTORS IN RACEWAY.
6. EXPOSED BRANCH CIRCUITS, INCLUDING IN CRAWLSPACES: TYPE THHN-THWN, SINGLE CONDUCTORS IN RACEWAY, METAL-CLAD CABLE, TYPE MC.
7. BRANCH CIRCUITS CONCEALED IN CEILINGS, WALLS, & PARTITIONS: TYPE THHN-THWN, SINGLE CONDUCTORS IN RACEWAY, ARMORED CABLE, TYPE AC, METAL-CLAD CABLE, TYPE MC.
8. BRANCH CIRCUITS CONCEALED IN CONCRETE, BELW SLABS-ON-GRADE, & UNDERGROUND: TYPE THHN-THWN, SINGLE CONDUCTORS IN RACEWAY.
9. BRANCH CIRCUITS INSTALLED BELOW RAISED FLOORING: TYPE THHN-THWN, SINGLE CONDUCTORS IN RACEWAY OR ARMORED CABLE, TYPE AC, METAL-CLAD CABLE, TYPE MC.
10. BRANCH CIRCUITS INSTALLED IN PATIENT CARE AREAS: TYPE HCF-MCAP OR AC-HCF W/ ASSEMBLY CERTIFIED AS AN EQUIPMENT GROUNDING CONDUCTOR & A GREEN INSULATED EQUIPMENT GROUNDING CONDUCTOR CONNECTED TO ALL RECEPTABLES, METALLIC BOXES CONTAINING RECEPTACLES, & ALL METALLIC EQUIPMENT CASINGS.

GROUNDING

A. INSULATED CONDUCTORS: COPPER WIRE OR CABLE INSULATED FOR 600 V UNLESS OTHERWISE REQUIRED BY APPLICABLE CODE OR AUTHORITIES HAVING JURISDICTION.

B. BARE COPPER CONDUCTORS:

1. SOLID CONDUCTORS: ASTM B 3.
2. STRANDED CONDUCTORS: ASTM B 8.
3. BONDING CABLE: 28 KCMIL, 14 STRANDS OF NO. 17 AWG CONDUCTOR, ¼ INCH (6 MM) IN DIAMETER.
4. BONDING CONDUCTOR: MO 4 OR NO. 6 AWG, STRANDED CONDUCTOR.
5. BONDING JUMPER: COPPER TAPE, BRAIDED CONDUCTORS TERMINATED W/ COPPER FERRULES; 1-5/8 INCHES (41 MM) WIDE & 1/16 INCH (1.6 MM) THICK.

C. GROUNDING BUS: PREDRILLED RECTANGULAR BARS OF ANNEALED COPPER, ¼ BY 4 INCHES (6.3 BY 100 MM) IN CROSS SECTION, W/ 9/32 INCH (7.14-MM) HOLES SPACED 1⅛ INCHES (28 MM) APART. STAND-OFF INSULATORS FOR MOUNTING SHALL COMPLY W/ UL 891 FOR USE IN SWITCHBOARDS, 600 V. LEXAN, IMPULSE TESTED AT 5000 V.

D. CONNECTORS: LISTED & LABELED BY AN NRTL ACCEPTBLE TO AUTHORITIES HAVING JURISDICTION FOR APPLICATIONS IN WHICH USED & SPECIDIC TYPES, SIZES, & COMBINATIONS OF CONDUCTORS & OTHER ITEMS CONNECTED.

E. BOLTED CONNECTORS FOR CONDUCTORS & PIPES: COPPER OR COPPER ALLOY, PRESSURE TYPE W/ AT LEAST TWO BOLTS. PIPE CONNECTORS: CLAMP TYPE, SIZED FOR PIPE.

F. WELDED CONNECTORS: EXOTHERMIC-WELDING JITS OF TYPES RECOMMENDED BY KIT MANUFACTURER FOR MATERIALS BEING JOINED & INSTALLATION CONDITIONS.

G. BUS-BAR CONNECTORS: MECHANICAL TYPE, CAST SILICON BRONZE, SOLDERLESS COMPRESSION-TYPE WIRE TERMINALS, & LONG-BARREL, TWO-BOLT CONNECTION TO GROUND BUS BAR.

H. CONDUCTORS: INSTALL SOLID CONDUCTOR FOR NO. 8 AWG & SMALLER, & STRANDED CONDUCTORS FOR 6 AWG & LARGER UNLESS OTHERWSE INDICATED.

I. ISOLATED GROUNDING CONDUCTORS: GREEN-COLORED INSULATION W/ CONTINUOUS YELLOW STIPE, ON FEEDERS W/ ISOLATED GROUND, IDENTIFY GROUNDING CONDUCTOR WHERE VISIBLE TO NORMAL INSPECTION, W/ ALTERNATING BANDS OF GREEN & YELLOW TAPE, W/ AT LEAST THREE BANDS OF GREEN & TWO BANDS OF YELLOW.

J. CONDUCTOR TEMINATIONS & CONNECTIONS:
PIPE & EQUIPMENT GROUNDING CONDUCTOR TERMINATIONS: BOLTED CONNECTORS. UNDERGROUND CONNECTIONS: WELDED CONNECTIONS: WELDED CONNECTORS EXCEPT AT TEST WELLS & AS OTHERWISE INDICATED, CONNECTIONS TO GROUND RODS AT TEST WELLS: BOLTED CONNECTORS, CONNECTIONS TO STRUCTURAL STEEL: WELDED CONNECTORS.

K. EQUIPMENTT GROUNDING:
INSTALL INSULATED EQUIPMENT GROUNDING CONDUCTORS TO COMPLY W/ THE NEC & AS INDICATED ON THE DRAWINGS.

ELECTICAL HANGERS & SUPPORTS

A. COMPLY W/ NECA 1 & NECA 101 FOR APPLICATION OF HANGERS & SUPPORTS FOR ELECTRICAL & SYSTEMS EXCEPT IF REQUIREMENTS IN THIS SECTION ARE STRICTER, MAXIMUM SUPPORT SPACING & MINIMUM HANGER ROD SIZE FOR RACEWAY: SPACE SUPPORTS FOR EMT, IMC, & RMC AS SCHEDULED IN NECA 1, WHERE ITS TABLE 1 LISTS MAXIMUM SPACINGS LESS THAN STATED IN NFPA 70. MINIMUM ROD SIZE SHALL BE ¼ INCH (6 MM) IN DIAMETER, MULTIPLE RACEWAYS OR CABLES: INSTALL TRAPEZE-TYPE SUPPORTS FABRICATED W/ STEEL SLOTTED OR OTHER SUPPORT SYSTEM, SIZED SO CAPACITY CAN BE INCREASED BY AT LEAST 25 PERCENT IN FUTURE WITHOUT EXCEEDING SPECIFIED DESIGN LOAD KIMITS. SECURE RACEWAYS & CABLES TO THESE SUPPORTS W/ TWO-BOLT CONDUIT CPAMPS, SPRING-STEEL CLAMPS DESIGNED FOR SUPPORTING SINGLE CONDUITS WITHOUT BOLTS MAY BE USED FOR 1½ INCH (38-MM) & SMALLED RACWAYS SERVING BRANCH CIRCUITS & COMMUNICATION SYSTEMS ABOVE SUSPENDED CEILINGS & FOR FASTENING RACEWAYS TO TRAPEZE SUPPORTS.

B. SUPPORT INSTALLATION: COMPLY W/ NECA 1 & NECA 101 FOR INSTALLATION REQUIREMENTS EXCEPT AS SPECIFIED IN THIS ARTICALE.

C. RACEWAY SUPPORT METHODS: IN ADDITION TO METHODS DESCRIBED IN NECA 1, EMT, IMC, & RMC MAY BE SUPPORTED BY OPENINGS THROUGH STRUCTURE MEMBERS, AS PERMITTED IN NFPA 70.

D. STRENGTH OF SUPPORT ASSEMBLIES: WHERE NOT INDICATED, SELECT SIZES OF COMPONENTS SO STRENGTH WILL BE ADQUATE TO CARRY PRESENT & FUTURE STATIC LOADS WITHIN SPECIFIED LOADING LIMITS. MINIMUM STATIC DESIGN LOAD USED FOR STRENGTH DETERMINATION SHALL BE WEIGHT OF SUPPORTED COMPONENTS PLUS 200 LB (90 KG).

E. MOUNTING & ANCHORAGE OF SURFACE-MOUNTED EQUIPMENT & COMPONENTS: ANCHOR & FASTEN ELECTRICAL ITEMS & THEIR SUPPORTS TO BUILDING STRUCTURAL ELEMENTS BY THE FOLLOWING METHODS UNLESS OTHERWISE INDICATED BY CODE:

1. TO WOOD: FASTEN W/ LAG SCREWS OR THROUGH BOLTS.
2. TO NEW CONCRETE: BOLT TO CONCRETE INSERTS.
3. TO MASONRY: APPROVED TOGGLE-TYPE BOLTS ON HOLLOW MASONRY UNITS & EXPANSION ANCHOR FASTENERS ON SOLID MASONRY UNITS.
4. TO EXISTING CONCRETE: EXPANSION ANCHOR FASTENERS.
5. INSTEAD OF EXPANSION ANCHORS, POWDER-ACTUATED DRIVEN THEADED STUDS PROVIDED W/ LOCK WASHERS & NUTS MAY BE USED IN EXISTING STANDARD-WEIGHT CONCRETE 4 INCHES (100 MM) THICK OR GREATER. DO NOT USE FOR ANCHORAGE TO LIGHTWEIGHT-AGGREGATE CONCRETE OR FOR SLABS LESS THAN 4 INCHES (100 MM) THICK.
6. TO STEEL: WELDED THREADED STUDS COMPLYING W/ AWS D1.1/D1.1M, W/ LOCK WASHERS & NUTS OR BEAM CLAMPS (MSS TYPE 19, 21, 23, 25, OR 27) COMPLYING W/ MSS SP-69.
7. TO LIGHT STEEL: SHEET METAL SCREWS.
8. DRILL HOLES FOR EXPANSION ANCHORS IN CONCRETE AT LOCATIONS & TO DEPTHS THAT AVOID REINFORCING BARS.

ELECTRICAL CONDUIT

A. METAL CONDUIT & TUBING
MANUFACTURERS: SUBJECT TO COMPLIANCE W/ REQUIREMENTS, PROVIDE PRODUCTS BY ONE OF THE FOLLOWING:

1. AFC CABLE SYSTEMS, INC.
2. ALFLEX INC.
3. ALLIED TYBE & CONDUIT: A TYCO INTERNATIONAL LTD. CO.
4. ANAMET ELECTRICAL, INC.:; ANACONDA METAL HOSE.
5. ELECTRI-FLEX CO.
6. MAVERICK TUBE CORPORATION.
7. O-Z GEDNET; A UNIT OF GENERAL SIGNAL.
8. WHEATLAND TUBE COMPANY.

B. DIGID STEEL CONDUIT: ANSI 080.1.

C. ALUMINUM RIGID CONDUIT: ANSI C80.5.

D. IMC: ANSI C80.6.

E. PVC-COATED STEEL CONDUIT: PVC-COATED RIGID STEEL CONDUIT.

F. COMPLY W/ NEMA RN 1.

G. COATING THICKNESS: 0.040 INCH (1 MM), MINIMUM.

H. EMT: ANSI C80.3.

I. FMC: ZINC-COATED STEEL.

J. LFMC: FLEXBLE STEEL CONDUIT W/ PVC JACKET.

K. FITTINGS FOR CONDUIT (INCLUDING ALL TYPES & FLEXBLE & LIQUID TIGHT), EMT, & CABLE: NEMA FB1; LISTED FOR TYPE & SIZE RACEWAY W/ WHIGH USED, & FOR APPLICATION & ENVIRONMENT IN WHICH INSTALLED.

1. FITTINGS FOR EMT: STEEL SET-SCREW OR COMPRESSION TYPE, DIE-CAST IS NOT ACCEPTABLE.
2. COATING FOR FITTINGS FOR PVC-COATED CONDUIT: MINIMUM THICKNESS, 0.040 INCH (1 MM), W/ OVERLAPPING SLEEVES PROTECTING THREADED JOINTS.

L. JOINT COMPOUND FOR RIGID STEEL CONDUIT OR IMC: LISTED FOR USE IN CABLE CONNECTOR ASSEMBLIES, & COMPUNDED FOR USE TO LUBRICATE & PROTECT THREADED RACEWAY JOINTS FROM CORROSION & ENHANCE THEIR CONDUCTIVITY.

N. BOXES, ENCLOSURES, & CABINETS:
MANUFACTURERS: SUBJECT TO COMPLIANCE W/ REQUIREMENTS, PROVIDE PRODUCTS BY ONE OF THE FOLLOWING:

1. COOPER CROUSE-HINDS; DIV. OF COOPER INDUSTRIES, INC.
2. EGS/ APPLETON ELECTRIC.
3. HOFFMAN.
4. HUBBELL INCRPORATED; KILLARK ELECTRIC MANUFACTURING CO. DIVISION.
5. O-Z/ GEDNEY; A UNIT OF GENERAL SIGNAL.
6. RACO; A HUBBELL COMPANY.
7. ROBROY INDUSTRIES, INC.; ENCLOSURE DIVISION.
8. THOMAS & BETTS CORPORATION.
9. WALKER SYSTEMS, INC.; WIREMOLD COMPANY (THE).

O. SHEET METAL OUTLET & DEVICE BOXES: NEMA OS 1.

P. CAST-METAL OUTLET & DEVICE BOXES: NEMA FB 1, FERROUS ALLOY, TYPE FD, W/ GASKETED COVER.

Q. METAL FLOOR BOXES; CAST METAL, FULLY ADJUSTABLE, RECTANGULAR.

R. SMALL SHEET METAL PULL & JUNCTION BOXES: NEMA OS 1.

S. CAST-METAL ACCESS, PULL, & JUNCTION BOXES: NEMA FB 1, GALVANIZED, CAST IRON W/ GASKETED COVER.

T. HINGED-COVER ENCLOSURES: NEMA 250, TYPE 1, W/ CONTINUOUS-HINGE COVER W/ FLUSH LATCH, UNLESS OTHERWIRE INDICATED.

1. METAL ELCLOSURES: STEEL, FINISHED INSIDE & OUT W/ MANUFACTURER'S STANDARD ENAMEL.

A. IN STANDARD PARTITIONS, WHERE ½" & ¾" CONDUITS ARE EMPLOYED: 4" SQUARE BY 2⅛" DEEP BOXES W/ 1-GANG PLASTER COVERS SHALL BE USED, NO. 4SD-SPL.

B. IN THIN PARTITIONS MEASURING 3½" OR LESS: 4" SQUARE BY 1½" DEEP BOXES W/ 1-GANG OR 2-GANG PLASTER COVERS BE USED, NO. 4S-SPL.

C. IN STANDARD PARTITIONS, WHERE CONDUITS OF A SIZE GREATER THAN ¾" ARE EMPLOYED: 4" SQUARE BY 2⅛" DEEP BOXES W/ 1-GANG OF 2-GANG PLASTER COVERS SHALL BE USED, NO. 4SJD SERIES. THE OUTLET BOXES SHALL BE LOCATED WHEREBY NO. TWO (2) OUTLET BOXES ARE INSTALLED CLOSER THAN 24" ON CENTER, & SECURELY ATTACHED TO THE PARTITION STUDS, W/ AT LEAST ONE (1) PARITITION STUD SEPARATING THE OUTLET BOXES. IT IS NOT ACCEPTABLE TO SECURE OUTLET BOXES ONLY TO DRYWALL PARTITION.

U. CABINETS:

1. NEMA 250, TYPE 1, GALVANIZED-STEEL BOX W/ REMOVABLE INTERIOR PANEL & REMOVABLE FRONT, FINISHED INSIDE & OUT W/ MANUFACTURER'S STANDARD ENAMEL.
2. HINGED DOOR IN FRONT COVER W/ FLUSH LATCH & CONCEALED HINGE.
3. KEY LATCH TO MATCH PANELBOARDS.
4. METAL BARRIERS TO SEPARATE WIRING OF DIFFERENT SYSTEMS & VOLTAGE.
5. ACCESSORY FEET WHERE REQUIRED FOR FREESTANDING EQUIPMENT.

V. RACEWAY APPLICATION:
OUTDOORS: APPLY RACEWAY PRODUCTS AS SPECIFIED BELOW, UNLESS OTHERWISE INDICATED:

1. EXPOSED CONDUIT: RIGID STEEL CONDUIT.
2. CONCEALED CONDUIT, ABOVEGROUND: RIGID STEEL CONDUIT, EMT, RNC.
3. UNDERGROUND CONDUIT: RNC, TYPE EPC-40-PVC, DIRECT BURIED.
4. CONNECTION TO VIBRATING EQUIPMENT (INCLUDING TRANSFORMERS & HYDRAULIC, PNEUMATIC, ELECTRIC SOLENOID, OR MOTOR-DRIVEN EQUIPMENT): LFMC.
5. BOXES & ENCLOSURES, ABOVEGROUND: NEMA 250, TYPE 3R.

Z. COMPLY W/ THE FOLLOWING INDOOR APPLICATIONS, UNLESS OTHERWISE INDICATED:

1. EXPOSED, NOT SUBJECT TO PHYSICAL DAMAGE: EMT.
2. EXPOSED, NOT SUBJECT TO SEVERE PHYSICAL DAMAGE: EMT.

3. EXPOSED, NOT SUBJECT TO SEVERE PHYSICAL DAMAGE: RIGID STEEL CONDUIT. INCLUDES RACEWAYS IN THE FOLLOWING LOCATIONS: LOADING DOCK, CORRIDORS USED FOR TRAFFIC OR MECHANIZED CARTS, FORKLIFTS, & PALLET-HANDLING UNITS, MECHANICAL ROOMS.

4. CONCEALED IN CEILINGS & INTERIOR WALLS & PARTITIONS: EMT.

5. CONNECTION TO VIBRATING EQUIPMENT (INCLUDING TRANSFORMERS & HYDRAULIC, PNEUMATIC, ELECTRIC SOLENOID, OR MOTOR-DRIVEN EQUIPMENT): FMC, EXCEPT USE LFMC IN DAMP OR WET LOCATIONS.

6. DAMP OF WET LOCATIONS: RIGID STEEL CONDUIT.
7. RACEWAYS FOR OPTICAL FIBER OR COMMUNICATIONS CABE IN SPACES USED FOR ENVIRONMENTAL AIR: PLENUM-TYPE, OPTICAL FIBER/ COMMUNICATIONS CABLE RECEWAY, EMT.
8. RACEWAYS FOR OPTICAL FIBER OR COMMUNICATIONS CABLE RISERS IN VERTICAL SHAFTS: RISER-TYPE, OPTICAL FIBER/ COMMUNICATIONS CABLE RACEWAY, EMT.
9. RACEWAYS FOR CONCEALED GENERAL PURPOSE DISTRIBUTION OF OPTICAL FIBER OR COMMUNICATIONS CABLE: GENERAL-USE, OPTICAL FIBER/ COMMUNICATIONS CABLE RACEWAY, RISER-TYPE, OPTICAL FIBER/ COMMUNICATIONS CABLE RACEWAY, PLENUM-TYPE, OPTICAL FIBER/ COMMUNICATIONS CABLE RACEWAY, EMT.
10. BOXES & ENCLOSURES: NEMA 250, TYPE 1, EXCEPT USE NEMA 250, TYPE 4X, STAINLESS STEEL IN DAMP OR WET LOCATIONS.

AA. MINIMUM RACEWAY SIZE: ½ INCH (16-MM) TRADE SIZE.

AB. RACEWAY FITTINGS: COMPATIBLE W/ RACEWAYS & SUITABLE FOR USE & LOCATION.

1. RIGID & INTERMEDIATE STEEL CONDUIT: USE THREADED RIGID STEEL CONDUIT FITTINGS, UNLESS OTHERWISE INDICATED.
2. PVC EXTERNALLY COATED, RIGID STEEL CONDUITS: USE ONLY FITTINGS LISTED FOR USE W/ THAT MATERIAL. PATCH & SEAL ALL JOINTS, NICKS, & SCRAPES IN PVC W/ THAT MATERIAL. PATCH & SEAL ALL JOINTS, NICKS, & SCRAPES IN PVC COATING AFTER INSTALLING CONDUITS & FITTINGS. USE SEALANT RECOMMENDED BY FITTING MANUFACTURER.

AC. INSTALLATION
COMPLY W/ NECA 1 FOR INSTALLATION REQUIREMENTS APPLICABLE TO PRODUCTS SPECIFIED EXCEPT WHERE REQUIREMENTS ON DRAWINGS OR IN THIS ARTICLE ARE STRICTER.

AD. KEEP RACEWAYS AT LEAST 6 INCHES (150 MM) AWAY FROM PARALLED RUNS OF FLUES & STEAM OR HOT-WATER PIPES. INSTALL HORIZONTAL RACEWAY RUNS ABOVE WATER & STEAM PIPING.

AE. COMPLETE RACEWAY INTALLATION BEFORE STATING CONDUCTOR INSTALLATION.

AF. SUPPORT RACEWAYS AS SPECIFIED IN "HANGERS & SUPPORTS FOR ELECTRICAL SYSTEMS."

AG. ARRANGE STUB-UPS SO CURVED PORTIONS OF BENDS ARE NOT VISIBLE ABOVE THE FINISHED SLAB.

AH. INSTALL NO MORE THAN THE EQUIVALENT OF THREE 90-DEGREE BENDS IN ANY CONDUIT RUN EXCEPT FOR COMMUNICATIONS CONDUITS, FOR WHICH FEWER BENDS ARE ALLOWED.

AI. CONCEAL CONDUIT & EMT WITHIN FINISHED WALLS, CEILINGS, & FLOORS, UNLESS OTHERWISE INDICATED.

AJ. RACEWAYS EMBEDDED IN SLABS:

1. RUN CONDUIT LARGER THAN 1-INCH (27-MM) TRADE SIZE, PARALLED OR AT RIGHT ANGLES TO MAIN REINFORCEMENT. WHERE AT RIGHT ANGLES TO REINFORCEMENT, PLACE CONDUIT CLOSE TO SLAB SUPPORT.
2. ARRANGE RACEWAYS TO CROSS BUILDING EXPANSION JOINTS AT RIGHT ANGLES W/ EXPANSION FITTINGS.
3. CHANGE FROM ENT TO RNC, TYPE EPC-40-PVC, RIGID STEEL CONDUIT, OF IMC BEFORE RISING ABOVE THE FLOOR.

AK. THREADED CONDUIT JOINTS, TEPOSED T WET, DAMP, CORROSIVE, OR OUTDOOR CONDITIONS: APPLY LISTED COMPOUND TO THREADS OF RACEWAY & FITTINGS BEFORE MAKING UP JOINTS. FOLLOW COMPOUND MANUFACTURER'S WRITTEN INSTRUCTIONS.

AL. RACEWAY TERMINATIONS AT LOCATIONS SUBJECT TO MOISTURE OR VIBRATION: USE INSULATING BUSHINGS TO PROTECT CONDUCTORS, INCLUDING CONDUCTORS SMALLER THAN NO. 4 AWG.

AM. INSTALL PULL WIRES IN EMPTY RACEWAYS. USE POLYPROPYLENE OR MONOFILAMENT PLASTIC LINE W/ NOT LESS THAN 200-LB (90-KG) TENSILE STRENGTH. LEAVE AT LEAST 12 INCHES (300 MM) OF SLACK AT EACH END OF PULL WIRE.

AN. RACEWAYS FOR OPTICAL FIBER & COMMUNICATIONS CABLE: INSTALL RACWAYS. METALLIC & NONMETALLIC, RIGID & FLEXIBLE, AS FOLLOW:

1. ¾ INCH (19-MM) TRADE SIZE & SMALLER: INSTALL RACEWAYS IN MAXIMUM LENGTHS OF 50 FEET (15 M).
2. 1-INCH (25-MM) TRADE SIZE & LARGER: INSTALL RACEWAYS IN MAXIMUM LENGTHS OF 75 FEET (23 M).
3. INSTALL W/ A MAXIMUM OF TWO 90-DEGREE BENDS OR EQUIVALENT FOR EACH LENGTH OF RECEWAY UNLESS DRAWINGS SHOW STRICTER REQUIREMENTS. SEPARATE LENGTHS W/ PULL OR JUNCTION BOXES OR TERMINATIONS AT DISTRICUTION FRAMES OR CABINETS WHERE NECESSARY TO COMPLY W/ THESE REQUIREMENTS.

AO. INSTALL RACEWAY SEALING FITTINGS AT SUITABLE, APPROVED, & ACCESSIBLE LOCATIONS & FILL THEM W/ LISTED SEALING COMPOUND. FOR CONCEALED RACEWAYS, INSTALL EACH FITTING IN A FLUSH STEEL BOX W/ A BLANK COVER PLATE HAVING A FINISH SIMLAR T THAT OF ADJACENT PLATES OR SURFACES. INSTALL RACEWAY SEALING FITTINGS AT THE FOLLOWING POINTS:

1. WHERE CONDUITS PASS FROM WARM TO COLD LOCATOINS, SUCH AS BOUNDARIES OF REFRIGERATED SPACES.
2. WHERE OTHERWISE REQUIRED BY NFPA 70.

AP. FLEXIBLE CONDUIT CONNECTIONS: USE MAXMUM OF INCHES (1219 MM) OF FLEXIBLE CONDUIT FOR RECESSED & SEMIRECESSED LIGHTING FIXTURES, EQUIPMENT SUBJECT TO VIBRATION, NOISE TRANSMISSION, OR MOVEMENT; & FOR TRANSFORMERS & MOTORS.

1. USE LFMC IN DAMP OR WET LOCATIONS.

AQ. RECESSED BOXES IN MASONRY WALLS: SAW-CUT OPENING FOR BOX IN CENTER OF CELL OF MASORY BLOCK, & INSTALL BOX FLUSH W/ SURFACE OF WALL.

AR. SET METAL FLOOR BOXES LEVEL & FLUSH W/ FINISHED FLOOR SURFACE.

AS. FIRESTOPPING
APPLY FIRESTOPPING TO ELECTRICAL PENETRATIONS OF FIRE-RATED FLOOR & WALL ASSEMBLIES TO RESTORE ORIGINAL FIRE-RESISTANCE RATING OF ASSEMBLY. PROVIDE SLEEVES FOR FLOOR PENETRATIONS EXTENDING 2" ABOVE FLOOR EXCEPT IN FINISHED AREAS WHERE COORDINATED W/ ARCHITECT.

CONT. ON E3.1

COUNTY APPROVAL:
SIGNATURE ____________________________ DATE____________

STATE OF TEXAS
JANET MURRAY HOFFMAN
102117
LICENSED
PROFESSIONAL ENGINEER

The seal appearing on this document was authorized by
JANET MURRAY HOFFMAN
P.E. 102117
12/7/2017

GALVESTON COUNTY
BEACH PAVILION
CRYSTAL BEACH, TX 77650

BE-Arc LLC Project No : C-13-007.01

Ibis Engineering
REG # F-11156
P.O. Box 55171
Galveston, Texas 77555
PH 409.621.6740

THIS PRINT IS THE PROPERTY OF IBIS ENGINEERING IT MUST NOT BE TRACED OR REPRODUCED IN ANY MANNER NOR SHALL IT BE SUBMITTED WITHOUT PRIOR WRITTEN CONSENT FROM IBIS ENGINEERING.

BRAX EASTERWOOD
DESIGN
2728 AVENUE Q SUITE 2
GALVESTON TEXAS 77550
PHONE 409-354-8976
EASTERWOOD@BEAIA.COM

FOR PERMIT

DATE	REVISION

DESIGN DEVELOPMENT

DATE ISSUED:
12/7/2017

COPYRIGHT 2017

E3.0

ELECTRICAL SPECFICATIONS (CONT.)

PANELBOARDS

A. ENCLOSURES: FLUSH- AND SURFACE-MOUNTED CABINETS. RATED FOR ENVIRONMENTAL CONDITIONS AT INSTALLED LOCATION. INDOOR DRY & CLEAN LOCATIONS: NEMA 250, TYPE 1. OUTDOOR LOCATIONS: NEMA 250, TYPE 3R. WET OR DAMP INDOOR LOCATIONS: NEMA 250, TYPE 4X STAINLESS STEEL.

B. FRONT: SECURED TO BOX W/ CONCEALED TRIM CLAMPS. FOR SURFACE-MOUNTED FRONTS, MATCH BOX DIMENSIONS; FOR FLUSH-MOUNTED FRONTS, OVERLAP BOX.

C. HINGED FRONT COVER: ENTIRE FRONT TRIM HINGED TO BOX & W/ STANDARD DOOR WITHIN HINGED TRIM COVER.

D. FINISHES:
PANELS & TRIM: GALVANIZED STEEL, FACTORY FINISHED IMMEDIATELY AFTER CLEANING & PRETREATING W/ MANUFACTURER'S STANDARD TWO-COAT, BAKED-ON FINISH CONSITSTING OF PRIME COAT & THERMOSETTING TOPCOAT.

E. BACK BOXES: GALVANIZED STEEL.

F. FUNGUS PROOFING: PERMANENT FUNGICIDAL TREATMENT FOR OVERCURRENT PROTECTIVE DEVICES & OTHER COMPONENTS.

G. DIRECTORY CARD: INSIDE PANELBOARD DOOR, MOUNTED IN TRANSPARENT CARD HOLDER.

H. INCOMING MAINS LOCATION: TOP & BOTTOM.

I. PHASE, NEUTRAL & GROUND BUSES:
MATERIAL: HARD-DRAWN COPPER, 98 PERCENT CONDUCTIVITY. EQUIPMENT GROUND BUS: ADEQUATE FOR FEEDER & BRANCH-CIRCUIT EQUIPMENT GROUNDING CONDUCTORS; BONDED TO BOX.

J. CONDUCTOR CONNECTORS: SUITABLE FOR USE W/ CONDUCTOR MATERIAL & SIZES. MATERIAL: HARD-DRAWN COPPER, 98 PERCENT CONDUCTIVITY. MAIN & NEUTRAL LUGS: COMPRESSION TYPE. CROUND LUGS & BUS-CONFIGURED TERMINATORS: COMPRESSION TYPE. FEED-THROUGH LUGS: COMPRESSION TYPE, SUITABLE FOR USE W/ CONDUCTOR MATERIAL. LOCATE AT OPPOSITE END OF BUS FROM INCOMING LUGS OR MAIN DEVICE.

K. PANELBOARD SHORT-CIRCUIT CURRENT RATING: FULLY RATED TO INTERRUPT SYMMETRICAL SHORT-CIRCUIT CURRENT AVAILABLE AT TERMINALS.

L. LIGHTING & APPLIANCE BRANCH-CIRCUIT PANELBOARDS MANUFACTURERS: SUBJECTOT COMPLIANCE W/ REQUIREMENTS, PROVIDE PRODUCTS BY ONE OF THE FOLLOWING:

EATON ELECTRICAL INC.; CUTLER-HAMMER BUSINESS UNIT.

GENERAL ELECTRIC COMPANY; GE CONSUMER & INDUSTRIAL

SIEMENS ENERGY & AUTOMATION, INC.

SQUARE D; A BRAND OF SCHNEIDER ELECTRIC.

PANELBOARDS: NEMA PB 1, LIGHTING & APPLIANCE BRANCH-CIRCUIT TYPE.

MAINS: CIRCUIT BREAKER OR LUGS ONLY.

BRANCH OVERCURRENT PROTECTIVE DEVICES: BOLT-ON CIRCUIT BREAKERS, REPLACEABLE WITHOUT DISTURBING ADJACENT UNITS.

DOORS: CONCEALED HINGES; SECURED W/ FLUSH LATCH W/ TUMBLER LOCK; KEYED ALIKE.

LIGHTING FIXTURES

A. GENERAL REQUIREMENTS FOR LIGHTING FIXTURES & COMPONENTS,

1. RECESSED FIXTURES: COMPLY W/ NEMA LE 4 FOR CEILING COMPATIBILITY FOR RECESSED FIXTURES.

2. INCANDESCENT FIXTURES: COMPLY W/ UL 1598. WHERE LER IS SPECIFIED, TEST ACCORDING TO NEMA LE 5A.

3. FLUORESCENT FIXTURES: COMPLY W/ UL 1598. WHERE LER IS SPECIFIED, TEST ACCORDING TO NEMA LE 5 & NEMA LE 5A AS APPLICABLE.

4. HID FIXTURES: COMPLY W/ UL 1598. WHERE LER IS SPECIFIED, TEST ACCORDING TO NEMA LE 5B.

METAL PARTS: FREE OF BURRS & SHARP CORNERS & EDGES. SHEET METAL COMPONENTS: STEEL UNLESS OTHERWISE INDICATED. FORM & SUPPORT TO PREVENT WARPING & SAGGING. DOORS, FRAMES, & OTHER INTERNAL ACCESS: SMOOTH OPERATING, FREE OF LIGHT LEAKAGE UNDER OPERATING CONDITIONS, & DESIGNED TO PERMIT RELAMPING WITHOUT USE OF TOOLS. DESIGNED TO PREVENT DOORS, FRAMES, LENSES, DIFFUSERS,& OTHER COMPONENTS FROM FALLING ACCIDENTALLY DURING RELAMPING & WHEN SECURED IN OPERATING POSITION.

B. DIFFUSERS & GLOBES:

1. ACRYLIC LIGHTING DIFFUSERS: 100 PERCENT VIRGIN ACRYLIC PLASTIC. HIGH RESISTANCE RADIATION.

2. LENS THICKNESS: AT LEAST 0.125 INCH (3.175 MM) MINIMUM UNLESS OTHERWISE INDICATED.

3. UV STABILIZED.

4. GLASS: ANNEALED CRYSTAL GLASS UNLESS OTHERWISE INDICATED.

C. FACTORY-APPLIED LABELS: COMPLY W/ UL 1598. INCLUDE RECOMMENDED LAMPS & BALLASTS. LABELS SHALL BE LOCATED WHERE THEY WILL BE READILY VISIBLE TO SERVICE PERSONNEL, BUT NOT SEEN FROM NORMAL VIEWING ANGLES WHEN FAMPS ARE IN PLACE. DABEL SHALL INCLUDE THE FOLLOWING LAMP & BALLAST CHARACTERISTICS:

1. "USE ONLY" & INCLUDE SPECIFIC LAMP TYPE.

2. LAMP DIAMETER CODE (T-4, T-5, T-8, T-12, ETC.) TUBE CONFIGURATION (TWIN, QUAD, TRIPLE, ETC.), BASE TYPE, & NOMINAL WATTAGE FOR FLUORESCENT & COMPACT FLUORESCENT LUMINAIRES.

3. LAMP TYPE, WATTAGE, BULB TYPE (ED17, BD56, ETC.) & COATING (CLEAR OR COATED) FOR HID LUMINAIRES.

4. START TYPE (PREHEAT, RAPID START, INSTANT START, ETC.) FOR FLUORESCENT & COMPACT FLUORESCENT LUMINAIRES.

5. ANSI BALLAST TYPE (M98, M57, ETC.) FOR HID LUMINAIRES.

6. CCT & CRI FOR ALL LUMINAIRES.

D. ELECTROMAGNETIC-INTERFERENCE FILTERS: FACTORY INSTALLED TO SUPPRESS CONDUCTED ELECTROMAGNETIC INTERFERENCE AS REQUIRED BY MIL-STD-461E. FABICATE LIGHTING FIXTURES W/ ONE FILTER ON EACH BALLAST INDICATED TO REQUIRE A FILTER.

BALLASTS

A. BALLASTS FOR LINEAR FLUORESCENT LAMPS, GENERAL REQUIREMENTS FOR ELECTRONIC BALLASTS:

1. COMPLY W/ UL 935 AND W/ ANSI C82.11.

2. DESIGNED FOR TYPE AND QUANTITY OF LAMPS SERVED.

3. BALLASTS SHALL BE DESIGNED FOR FULL LIGHT OUTPUT UNLESS ANOTHER BF, DIMMER, OR BI-LEVEL CONTROL IS INDICATED.

4. SOUND RATING: CLASS A.

5. TOTAL HARMONIC DISTORTION RATING: LESS THAN 10 PERCENT.

6. TRANSIENT VOLTAGE PROTECTION: IEEE C62.41.1 AND IEEE C62.41.2, CATEGORY A OR BETTER.

7. OPERATING FREQUENCY: 42 KHZ OR HIGHER.

8. LAMP CURRENT CREST FACTOR: 1.7 OR LESS.

9. BF: .088 OR HIGHER.

10. POWER FACTOR: .95 OR HIGHER.

11. PARALLEL LAMP CIRCUITS: MULTIPLE LAMP BALLASTS SHALL COMPLY W/ ANSI C82.11 AND SHALL BE CONNECTED TO MAINTAIN FULL LIGHT OUTPUT ON SURVIVING LAMPS IF ONE OR MORE LAMPS FAIL.

B. LUMINAIRES CONTROLLED BY OCUPANCY SENSORS SHALL HAVE PROGRAMMED-START BALLASTS.

C. ELECTRONIC PROGRAMMED-START BALLASTS FOR T8 AND T5 AND T5HO LAMPS: COMPLY W/ ANSI C82.11 AND THE FOLLOWING:

1. LAMP END-OF-LIFE DETECTION AND SHUTDOWN CIRCUIT FOR T5 DIAMETER LAMPS.

2. AUTOMATIC LAMP STARTING AFTER LAMP REPLACEMENT.

D. ELECTROMAGNETIC BALLASTS: COMPLY W/ ANSI C82.1; ENERGY SAVING, HIGH-POWER FACTOR, CLASS P, AND HAVING AUTOMATIC-RESET THERMAL PROTECTION.

E. BALLAST MANUFACTURER CERTIFICATION: INDICATED BY LABEL.

F. SINGLE BALLASTS FOR MULTIPLE LIGHTING FIXTURES: FACTORY WIRED W/ BALLAST ARRANGEMENTS AND BUNDLED EXTENSION WIRING TO SUIT FINAL INSTALLATION COMDITIONS WITHOUT MODIFICATION OR REWIRING IN THE FIELD.

G. BALLASTS FOR COMPACT FLUORESCENT LAMPS.

H. DESCRIPTION: ELECTRONIC-PROGRAMMED RAPID-START TYPE, COMPLYING W/ UL 935 AND W/ ANSI C 82.11, DESIGNED FOR TYPE AND QUANTITY OF LAMPS INDICATED. BALLAST SHALL BE DESIGNED FOR FULL LIGHT OUTPUT UNLESS DIMMER OR BI-LEVEL CONTROL IS INDICATED:

1. LAMP END-OF-LIFE DETECTION AND SHUTDOWN CIRCUIT.

2. AUTOMATIC LAMP STARTING ATER LAMP REPLACEMENT.

3. SOUND RATING: CLASS A.

4. TOTAL HARMONIC DISTORTION RATING: LESS THAN 20 PERCENT.

5. TRANSIENT VOLTAGE PROTECTION: IEEE C62.41.1 AND IEEE C62.41.2, CATEGORY A OR BETTER.

6. OPERATING FREQUENCY: 20 KHZ OR HIGHER.

7. LAMP CURRENT CREST FACTOR: 1.7 OR LESS.

8. BF: 0.95 OR HIGHER UNLESS OTHERWISE INDICATED.

9. POWER FACTOR: 0.95 OR HIGHER.

10. INTERFERENCE: COMPLY W/ 47 CFR 18, CH. 1, SUBPART C, FOR LIMITATIONS ON ELECTROMAGNETIC AND RADIO-FREQUENCY INTERFERENCE FOR NONCONSUMER EQUIPMENT.

FLUORESCENT LAMPS

A. T8 RAPID-START LAMPS, RATED 32 W MAXIMUM, NOMINAL LENGTH OF 48 INCHES (1220 MM), 2800 INITIAL LUMENS (MINIMUM), CRI 85 (MINIMUM), COLOR TEMPERATURE 3000 K, AND AVERAGE RATED LIFE 20,000 HOURS UNLESS OTHERWISE INDICATED.

B. T8 RAPID-START LAMPS, RATED 17 W MAXIMUM, NOMINAL LENGTH OF 24 INCHES (610 MM), 1300 INITIAL LUMENS (MINIMUM), CRI 85 (MINIMUM), COLOR TEMPERATURE 3000 K, AND AVERAGE RATED LIFE 20,000 HOURS UNLESS OTHERWISE INDICATED.

C. T5 RAPID-START LAMPS, RATED 28 W MAXIMUM, NOMINAL LENGTH OF 45.2 INCHES (1150 MM), 2900 INITIAL LUMENS (MINIMUM), CRI 85 (MINIMUM), COLOR TEMPERATURE 3000 K, AND AVERAGE RATED LIFE 20,000 HOURS UNLESS OTHERWISE INDICATED.

D. T5HO RAPID-START,HIGH-OUTPUT LAMPS, RATED 54 W MAXIMUM, NOMINAL LENGTH OF 45.2 INCHES (1150 MM), 5000 INITIAL LUMENS (MINIMUM), CRI 85 (MINIMUM), COLOR TEMPERATURE 4100 K, AND AVERAGE RATED LIFE 20,000 HOURS UNLESS OTHERWISE INDICATED.

E. COMPACT FLUORESCENT LAMPS: 4-PIN, CRI 80 (MINIMUM), COLOR TEMPERATURE 3000 K, AND AVERAGE RATED LIFE 10,000 HOURS AT THREE HOURS OPERATION PER START, AND SUITABLE FOR USE W/ DIMMING BALLASTS UNLESS OTHERWISE INDICATED.

1. 13 W: T4, DOUBLE OR TRIPLE TUBE, RATED 900 INTIAL LUMENS (MINIMUM).

2. 18 W: T4, DOUBLE OR TRIPLE TUBE, RATED 1200 INTIAL LUMENS (MINIMUM).

3. 26 W: T4, DOUBLE OR TRIPLE TUBE, RATED 1800 INTIAL LUMENS (MINIMUM).

4. 32 W: T4, TRIPLE TUBE, RATED 2400 INTIAL LUMENS (MINIMUM).

5. 42 W: T4, TRIPLE TUBE, RATED 2400 INTIAL LUMENS (MINIMUM).

6. 57 W: T4, TRIPLE TUBE, RATED 2400 INTIAL LUMENS (MINIMUM).

7. 70 W: T4, TRIPLE TUBE, RATED 2400 INTIAL LUMENS (MINIMUM).

WIRING DEVICES

A. MANUFACTURERS:

1. COOPER WIRING DEVICES;

2. HUBBELL INCORPORATED; WIRING DEVICE-KELLUMS

3. LEVITON MFG. COMPANY INC.

4. PASS & SEYMOUR/ LEGRAND; WIRING DEVICES & ACCESSORIES

B. ALL WIRING DEVICES TO BE WHITE OR COLOR AS SELECTED BY ARCHITECT.

C. STRAIGHT BLADE RECEPTACLES:
CONVENIENCE RECEPTABLES, 125 V, 20 A: COMPLY W/ NEMA WD 1, NEMA WD 6 CONFIGURATION 5-20R, AND UL 498. PRODUCTS: SUBJECT TO COMPLIANCE W/ REQUIREMENT, PROVIDE ONE OF THE FOLLOWING:

1. LEVITON; 16341-W (SINGLE), 16362-W (DUPLEX).

2. ANY EQUAL BY ABOVE LISTED MANUFACTURERS.

D. ISOLATED-GROUND, DUPLEX CONVENIENCE RECEPTACLES, 125 V, 20 A: COMPLY W/ NEMA WD 1, NEMA WD 6 CONFIGURATION 5-20R, AND UL 498. PRODUCTS: SUBJECT TO COMPLIANCE W/ REQUIREMENTS, PROVIDE ONE OF THE FOLLOWING:

3. LEVITON; 16362-IGW.

4. ANY EQUAL BY ABOVE LISTED MANUFACTURERS.

DESCRIPTION: STRAIGHT BLADE; EQUIPMENT GROUNDING CONTACTS SHALL BE CONNECTED ONLY TO THE GREEN GROUNDING SCREW TERMINAL OF THE DEVICE AND W/ INHERENT ELECTRICAL ISOLATION FROM MOUNTING STRAP. ISOLATION SHALL BE INTERGRAL TO RECEPTACLE CONSTRUCTION AND NOT DEENDENT ON REMOVABLE PARTS.

E. GFCI RECEPTACLES
GENERAL DESCRIPTION: STRAIGHT BLADE, FEED-THROUGH TYPE. COMPLY W/ NEMA WD 1, NEMA WD 6, UL 498, AND UL 943, CLASS A, AND INCLUDE INICATOR LIGHT THAT IS LIGHTED WHEN DEVICE IS TRIPPED, DUPLEX GFCI CONVENIENCE RECEPTACLES, 125 V, 20 A: PRODUCTS: SUBJECT TO COMPLIANCE W/ REQUIREMENTS, PROVIDE ONE OF THE FOLLOWING:

1. LEVITON: 7899-W.

2. ANY EQUAL BY ABOVE LISTED MANUFACTURERS.

F. SNAP SWITCHES, COMPLY W/ NEMA WD 1 AND UL 20. SWITCHES, 120/277 V, 20 A: PRODUCTS: SUBJECT TO COMPLIANCE W/ REQUIREMENTS, PROVIDE ONE OF THE FOLLOWING:

1. LEVITON; 5621-2W (SINGLE POLE), 5622-2 (TWO POLE), 5623-2 (THREE WAY)

2. ANY EQUAL BY ABOVE LISTED MANUFACTURERS.

H. WALL-BOX DIMMERS, DIMMER SWITCHES: MODULAR, FULL-WAVE, SOLID-STATE UNITS W/ INTERGRAL, QUIET ON-OFF SWITCHES, W/ AUDIBLE FREQUENCY AND EMI/RFI SUPPRESION FILTERS, CONTROL: CONTINUOUSLY ADJUSTABLE SLIDER; W/ SINGLE-POLE OR THREE-WAY SWITCHING, COMPLY W/ UL 1472.

1. INCANESCENT LAMP DIMMERS: 120 V; CONTROL SHALL FOLLOW SQUARE-LAW DIMMING SHALL REQUIRE NO DERATING WHEN GANGED W/ OTHER DEVICES.

2. FLUORESCENT LAMP DIMMER SWITCHES: MODULAR; COMPATIBLE W/ DIMMER BALLASTS; TRIM POTENTIOMETER TO ADJUST LOW-END DIMMING; DIMMER-BALLAST COMBINATION CAPABLE OF CONSISTENT DIMMING W/ LOW END NOT GREATER THAN 20 PERCENT OF FULL BRIGHTNESS.

3. ACCEPTABLE MANUFACTURERS: LEVITON, LUTRON.

I. OCCUPANCY SENSORS, WALL-SWITCH SENSORS: SUBJECT TO COMPLIANCE W/ REQUIREMENTS, PROVIDE ONE OF THE FOLLOWING:

1. LEVITON; ODS15-IDW.

2. ANY EQUAL BY NOVITAS, WATTSTOPPER OR SENSOR SWITCH.

DESCRIPTION: PASSIVE-INFRARED TYPE, 120/277 V, ADJUSTABLE TIME DELAY UP TO 20 MINUTES, 180-DEGREE FIELD OF VIEW, W/ A MINIMUM CONVERAGE AREA OF 1800 SQ.FT. (167 SQ.M).

K. WALL PLATES, SINGLE AND COMBINATION TYPES TO MATCH CORRESPONDING WIRING DEVICES. PLATE-SECURING SCREW: METAL W/ HEAD COLOR TO MATCH PLATE FINISH.

1. MATERIAL FOR FINISHED SPACES: SMOOTH, HIGH-IMPACT THERMOPLASTIC 0.035-INCH-(1-MM) THICK.

2. MATERIAL FOR UNFINISHED SPACES: SMOOTH, HIGH-IMPACT THERMOPLASTIC.

3. MATERIAL FOR DAMP LOCATIONS: THERMOPLASTIC W/ SPRING-LOADED LIFT COVER, AND LISTED AND LABELED FOR USE IN "WET LOCATIONS."

4. WET-LOCATION, WEATHERPROOF COVER PLATES: NEMA 250, COMPLYING W/ TYPE 3R WEATHER-RESISTANT, THERMOPLASTIC W/ LOCKABLE COVER.

DEVICE MOUNTING HEIGHTS

IN GENERAL, UNLESS OTHERWISE NOTED ON THE ARCHITECTURAL DRAWINGS OR TH ELECTRICAL DRAWINGS, MOUNTING SHALL BE AS FOLLOWS: (HEIGHTS SHOWN ARE ABOVE FINISHED FLOOR TO CENTER LINE OF OUTLET).

WALL SWITCHES	48 INCHES
ELECTRICAL, VOICE/ DATA OUTLETS	18 INCHES
CLOCK OUTLETS	90 INCHES
RECEPTACLES (MOUNTED ABOVE A COUNTER)	42 INCHES
FIRE ALARM PULL STATIONS	42 INCHES
FIRE ALARM SYSTEM AUDIO/ VISUAL STROBES	80 INCHES
FIRE ALARM SYSTEM VISUAL STROBES	80 INCHES
WALL MOUNTED TELEPHONE	42 INCHES

COUNTY APPROVAL:
SIGNATURE ______________________________ DATE____________

GALVESTON COUNTY
BEACH PAVILION
CRYSTAL BEACH, TX 77650

BE-Arc LLC Project No : C-13-007.01

Ibis Engineering
REG # F-11156
P.O. Box 55171
Galveston, Texas 77555
PH 409.621.6740

THIS PRINT IS THE PROPERTY OF IBIS ENGINEERING IT MUST NOT BE TRACED OR REPRODUCED IN ANY MANNER NOR SHALL IT BE SUBMITTED WITHOUT PRIOR WRITTEN CONSENT FROM IBIS ENGINEERING.

B R A X E A S T E R W O O D
D E S I G N
2728 AVENUE Q SUITE 2
GALVESTON TEXAS 77550
PHONE 409-354-8976
EASTERWOOD@BEAIA.COM

FOR PERMIT

DATE	REVISION

DESIGN DEVELOPMENT

DATE ISSUED:
12/7/2017

COPYRIGHT 2017

E3.1

STATE OF TEXAS
JANET MURRAY HOFFMAN
102117
LICENSED
PROFESSIONAL ENGINEER

The seal appearing on this document was authorized by
JANET MURRAY HOFFMAN
P.E. 102117
12/7/2017

COUNTY APPROVAL:
SIGNATURE ______________________________ DATE____________

LT-1A

Surface

UQU-31344
Quarter 1

LIGMAN LIGHTING USA

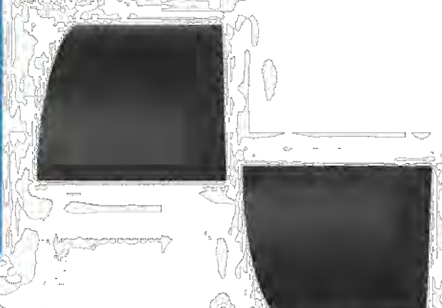

A small size quarter-cylindrical wall mounted luminaire with a selection of precision optics providing type II, III & IV light distributions for optimum spacing and perfect uniformity between light fixures. This light fixture has vandal proof tempered glass with specially designed silicon gaskets that allow the fixture to be mounted as an uplight, as well as downlight configurations. Installation is made easy with a die cast aluminum wall mount casting, that is attached to the wall before securing the fixture with a single vandal resistant screw. The lens is available in clear or lightly frosted options to suit customer requirements. Designed for the illumination of entrances, terraces, corridors and building facades. For mounting in upward or downward positions. When installed as a downlight this fixture is Dark Sky compliant.

Physical Data
Length • 8.1"
Height • 8.6"
Weight • 13.2 lbs
IP65 • Suitable For Wet Locations
IK08 • Impact Resistant (Vandal Resistant)

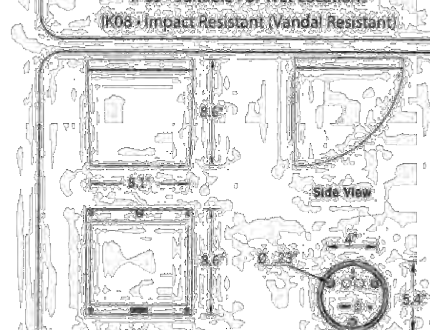

Aluminum Casting
Less than 0.1% copper content – Marine Grade LM6 Aluminum High Pressure die casting provides excellent mechanical strength, clean detailed product lines and excellent heat dissipation.

Pre paint
8 step degrease and phosphate process that includes deoxidizing and etching as well as a zinc and nickel phosphate process before product painting.

Memory Retentive -Silicon Gasket
Provided with special injection molded **"fit for purpose"** long life high temperature **memory retentive silicon gaskets**. Maintains the gaskets exact profile and seal over years of use and compression.

Thermal management
LM6 Aluminum is used for its **excellent mechanical strength and thermal dissipation properties** in low and high ambient temperatures. The superior thermal heat sink design by Ligman used in conjunction with the driver, controls thermals below critical temperature range to ensure maximum luminous flux output, as well as providing long LED service life and ensuring less than 10% lumen depreciation at 50,000 hours.

Surge Suppression
Standard 10kv surge suppressor provided with all fixtures.

Finishing
All Ligman products go through an extensive finishing process that includes fettling to improve paint adherence.

Paint
UV Stabilized 4.9Mil thick powder coat paint and baked at 200 Deg C.
This process ensures that Ligman products can withstand harsh environments.
Rated for use in natatoriums.

Hardware
Provided Hardware is **Marine grade 316 Stainless steel.**

Anti Seize Screw Holes
Tapped holes are infused with a **special anti seize compound** designed to prevent seizure of threaded connections, due to electrolysis from heat, corrosive atmospheres and moisture.

Crystal Clear Low Iron Glass Lens
Provided with tempered, impact resistant **crystal clear low iron glass** ensuring no green glass tinge.

Optics & LED
Precise optic design provides **exceptional light control and precise distribution of light.**
LED CRI > 80

Lumen - Maintenance Life
L80 /B10 at 50,000 hours (This means that at least 90% of the LED still achieve 80% of their original flux)

Standard Options

Lamp	Beam	LED Color	Finish Color
40w LED	T2 • Type II Distribution - 3510lm	W27 • 2700K	
	T3 • Type III Distribution - 3591lm	W30 • 3000K	
	T4 • Type IV Distribution - 3624lm	W40 • 4000K	

Extra Options (Consult Factory For Pricing)
Surface Conduit Entry Box
1/2 • 1/2" Cable Entry
3/4 • 3/4" Cable Entry
Additional information needed for conduit specifications
F • Frosted Lens

Ordering Example : UQU - 31344 - 40w - T2 - W30 - 02 - 120/277v - Options

		Lamp	Beam	LED Color	Color	Voltage	Options	
UQU	31344	40w LED						

PROJECT: DATE: QUANTITY:
TYPE: NOTE:

Head Office:
7144 NW Progress Ct
Hillsboro, Oregon 97124
Tel: 503-645-0500
Fax: 503-645-8100
www.ligmanlightingusa.com

LT-2

Surface

UTA-31861
Tango 29 Downlight

ida DARK SKY APPROVED 2016

LIGMAN LIGHTING USA

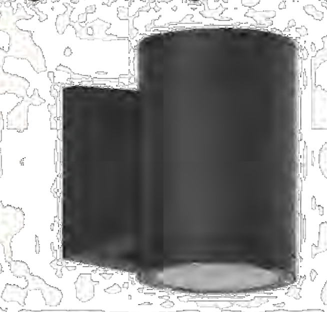

Wall luminaires with a selection of light distributions and LED wattages with downward light distributions. The Tango is unique as it is available with Type II,III & IV light distribution options that facilitates wider spacing and even light distribution between the light fixtures. Spacings of up to 40' on center, and a 14' mounting height with a 2 fc average can be achieved using the type II optic. This provides higher energy saving and reduced installation costs. The Tango 31 cylindrical or Tango 32 square up-down versions can be manufactured using different type beam distributions for the up and down optics.
Integral electronic control gear.
Mounting plate for 3" and 4" junction box is provided with the fixture. Matching surface mount conduit boxes are available as an option.
Custom round pole adapters can be manufactured to suit specific pole diameters for column mounting applications. Please contact the factory for more information.

For the Square downlight option, see Tango 30.
For type V distributions, see Jet surface wall luminaires.

Physical Data
Length • 7.3"
Height • 10.7"
Weight • 9.7 lbs
IP65 • Suitable For Wet Locations
IK08 • Impact Resistant (Vandal Resistant)

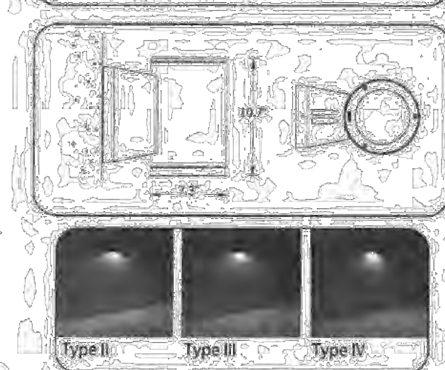

Aluminum Casting
Less than 0.1% copper content – Marine Grade LM6 Aluminum High Pressure die casting provides excellent mechanical strength, clean detailed product lines and excellent heat dissipation.

Pre paint
8 step degrease and phosphate process that includes deoxidizing and etching as well as a zinc and nickel phosphate process before product painting.

Memory Retentive -Silicon Gasket
Provided with special injection molded **"fit for purpose"** long life high temperature **memory retentive silicon gaskets**. Maintains the gaskets exact profile and seal over years of use and compression.

Thermal management
LM6 Aluminum is used for its **excellent mechanical strength and thermal dissipation properties** in low and high ambient temperatures. The superior thermal heat sink design by Ligman used in conjunction with the driver, controls thermals below critical temperature range to ensure maximum luminous flux output, as well as providing long LED service life and ensuring less than 10% lumen depreciation at 50,000 hours.

Surge Suppression
Standard 10kv surge suppresor provided with all fixtures.

BUG Rating
B1 - U0 - G1

Finishing
All Ligman products go through an extensive finishing process that includes fettling to improve paint adherence.

Paint
UV Stabilized 4.9Mil thick powder coat paint and baked at 200 Deg C.
This process ensures that Ligman products can withstand harsh environments.
Rated for use in natatoriums.

Hardware
Provided Hardware is **Marine grade 316 Stainless steel.**

Anti Seize Screw Holes
Tapped holes are infused with a **special anti seize compound** designed to prevent seizure of threaded connections, due to electrolysis from heat, corrosive atmospheres and moisture.

Crystal Clear Low Iron Glass Lens
Provided with tempered, impact resistant **crystal clear low iron glass** ensuring no green glass tinge.

Optics & LED
Precise optic design provides **exceptional light control and precise distribution of light.**
LED CRI > 80

Lumen - Maintenance Life
L80 /B10 at 50,000 hours (This means that at least 90% of the LED still achieve 80% of their original flux)

Standard Options

Lamp	Beam	LED Color	Finish Color
37w LED	T2 • Type II Distribution - 2706lm	W27 • 2700K	
28w LED	T3 • Type III Distribution - 2722lm	W30 • 3000K	
20w LED	T4 • Type IV Distribution - 2777lm	W40 • 4000K	
	(lumen output for 37w LED)	(IDA Dark Sky approved for 2700K & 3000K only)	

Options (Consult Factory for Pricing)
F - Frosted Lens
EMG - Emergency Battery Pack
SCE - Custom Surface Conduit Entry Box
HGT - Specify Custom Height
NAT - Natatorium & High Salt Environments

Ordering Example : UTA - 31861 - 37w - T2 - W30 - 02 - 120/277v - Options

		Lamp	Beam	LED Color	Color	Voltage	Options		
UTA	31861								

PROJECT: DATE: QUANTITY:
TYPE: NOTE:

Head Office:
7144 NW Progress Ct
Hillsboro, Oregon 97124
Tel: 503-645-0500
Fax: 503-645-8100
www.ligmanlightingusa.com

LT-3

Portfolio

DESCRIPTION

2- inch LED recessed downlight with excellent light control and low aperture brightness. Offered with 15°, 25° 40° or 55° optic producing a smooth distribution. Lumen packages ranging from 500 to 2000 with color temperatures of 2400K, 2700K, 3000K, 3500K, 4000K and 5000K, in 80, 90 or 97CRI. Available with dim-to-warm technology – similar to halogen at full power, the 3000K LED warms smoothly as dimmed to 1850K creating a rich warm glow within the space.

Catalog #		Type
Project		
Comments		Date
Prepared by		

SPECIFICATION FEATURES

Lower Reflector
Round or square painted die cast aluminum or anodized aluminum lower reflector with a lensed upper optical chamber providing superior lumen output with minimal source brightness. Anodized reflectors are offered in all Portfolio Alzak finishes. Plaster lathing ring accessory offered for flush reflector transition.

Trim Retention
Reflector is retained with three or four pressure springs holding the flange tight to the finished ceiling surface.

Optic
TIR optic in 15°, 25°, 40, 55° or wall wash provides smooth beam without color separation. Media holder fits onto upper reflector and holds up one lens media. For non-lens trims only.

Plaster Frame / Collar
New Construction
Galvanized steel plaster frame designed for ceiling thickness from ½ to 1-1/4-inch.
Retrofit
Installs from below.

Universal Mounting Bracket
Accepts 1/2" EMT, C channel and bar hangers.

Junction Box
(4) 1/2" trade size pry outs positioned to allow straight conduit runs. Listed for (4) #12AWG (two in, two out) 90°C conductors and feed thru branch wiring. Lever connectors for simple push in wiring.

Thermal
Forged aluminum heat sink conducts heat away from the LED COB for optimal performance and long life.

LED
Chip on board with a multitude of highly efficient white LED's, combined with TIR optic produces an even distribution with no pixilation. Rated for 50,000 hours at 70% lumen maintenance. Auto resetting, thermally protected. LED's are turned off when safe operating temperatures are exceeded. Color variation within 3-step MacAdam ellipses. Flexible disconnect allows for tool-less replacement of LED engine from below ceiling. Available in 80, 90 or 97 CRI. D2W™ – dim-to-warm shifts CCT from 3000K to 1850K as fixture dims mimicking halogen sources.

Driver
Standard 120-277V 0-10V dimming driver provides flicker free dimming from 100% to 1%. Optional 120V leading edge, <1% 0-10V, Fifth Light, DMX or Lutron® Ecosystem. Driver can be serviced from above or through the aperture with standard D010 driver. Other drivers require above ceiling access.

Connected Lighting Systems
WaveLinx tilemount daylight sensor includes control module, sensor and cable allowing use with the comprehensive lighting system.

LumaWatt Pro (powered by Enlighted) wireless tile mount sensor and relay accessory enables wireless control using a tile mount sensor accessory.

Code Compliance
Thermally protected and cULus listed for protected damp locations. IP66 rated with lensed reflective when used with IP66 gasket kit accessory. EMI/RFI emissions per FCC 47CFR Part 18 Class B consumer limits. 1500 lumen and above are Non-IC rated - Insulation must be kept 3" from top and sides of housing. IC-rated up to 1000 lumens (except wall wash).
RoHS Compliant. Photometric testing completed in accordance with IES LM 79 and TM-30 standards. LED life testing completed in accordance with LM 80 standards.

Warranty
5-year warranty

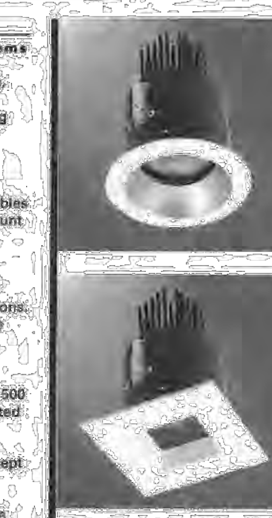

LD2B EU2B 2LB

500, 1000, 1500, 2000 Lumens
LED

2-inch
Downlight
New Construction or Retrofit
2x4 and 2x6

Can be used to comply with California Title 24 High Efficacy requirements. Certified to California Title 20 Appliance Efficiency Database.

D2W

EATON

TD520051EN
2017-03-21 11:57:26

LT-3

LD2B EU2B 2LB

ORDERING INFORMATION

SAMPLE NUMBER: LD2B15D010

Housing	Lumens[1]	Voltage	Driver	Options
LD2B=New Construction Downlight 2" 2000 lumen LDRT2B=Remodel Downlight 2" 1500 lumen	5=500 lumens 10=1000 lumens 15=1500 lumens 20=2000 lumens	Blank=120-277V	D010=0-10V Dimming, 5% to 100%, 120V-277V D010TR=0-10V or Line Voltage Dimming, 1% to 100%, 120V-277V DE010=0-10V Dimming, 0% to 100%, 120V-277V[6] D5LT=Fifth Light® (DALI) Dimming, 0% to 100%, 120V-277V[6] DMX=DMX Dimming, 0% to 100%, 120V-277V[6, 9] DL2=Lutron® Hi-Lume Forward Phase Dimming, 1% to 100%, 120V Only[6] DL3=Lutron® Hi-Lume 3 Wire Dimming, 1% to 100%, 120V-277V[6] DLE=Lutron Ecosystem dimming 1% to 100%, 120V-277V[6]	EMBOD=Bodine® Emergency Module with Remote Test Switch[6] EM7=7W Emergency Module with Remote Test Switch[6] EM14=14W Emergency Module with Remote Test Switch[6]

SAMPLE NUMBER: EU2B15B03S

Power Module	Lumen Levels / Distribution[1] / Optic	CRI	Color		
EU2B=2" Universal LED Module	05SP15=500 lumen 15° IC Rated 05WW=500 lumen wall wash IC Rated[8] 10SP15=1000 lumen 15° IC Rated 10WW=1000 lumen wall wash Non-IC Rated[8] 0510NFL25=500 and 1000 lumen 25° IC Rated 0510FL40=500 and 1000 lumen 40° IC Rated 0510WFL55=500 and 1000 lumen 55° IC Rated 15NFL25=1500 lumen 25° Non IC Rated 15FL40=1500 lumen 40° Non IC Rated 15WFL55=1500 lumen 55° Non IC Rated 15WW=1500 lumen wall wash Non IC Rated[8] 20NFL25=2000 lumen 25° Non IC Rated 20FL40=2000 lumen 40° Non IC Rated 20WFL55=2000 lumen 55° Non IC Rated	80=80 CRI minimum 90=90 CRI minimum 97=97 CRI minimum	80 CRI 27=2700K 30=3000K 35=3500K 40=4000K 50=5000K	90 CRI 24=2400K 27=2700K 30=3000K 35=3500K 40=4000K 50=5000K	97 CRI 27=2700K 30=3000K

Dim to Warm
10NFL259030D2W=1000 lumen 25° IC Rated
15NFL259030D2W=1500 lumen 25° Non-IC
10FL409030D2W=1000 lumen 40° IC Rated
15FL409030D2W=1500 lumen 40° Non-IC
10WFL559030D2W=1000 lumen 55° IC Rated
15WFL559030D2W=1500 lumen 55° Non-IC

SAMPLE NUMBER: 2LBD1LI

Trim	Reflector	Flange	Finish
2LB=2" LED	D=Round downlight spun reflector SW=Round lensed Wall Wash, Spun Aluminum DL=Round Downlight lensed spun reflector DC=Round Cast Downlight[4] DLC=Round Lensed cast downlight[4] PIN=Round Pinhole downlight black oculus[5] PINW=Round Pinhole downlight white oculus[5] DSQC=Square Cast Downlight[4] DSQLC=Square Lensed cast shallow downlight[4]	1=Self-flanged[7] 2=White Painted Self-flanged 3=Rimless[3]	LI=Specular Clear[2] H=Semi-Specular Clear[2] WMH=Warm Haze[2] WH=Wheat[2] GPH=Graphite Haze[2] B=Specular Black[2] MW=Matte White MB=Matte Black[2] MMS=Matte Metallic Silver[2]

Accessories
LGSKT2IP66=IP66 Gasket Kit
PRR2=Round plaster lathing ring (order with rimless option)
Bar Hangers
HB26=Pair C-channel bar hanger, 26" long
RMB22=Pair wood joist bar hanger 22" long
Connected Lighting Systems
PORLWTFD1=LumaWatt Pro wireless sensor kit (0-10V only)[6]
TMSWPD1=WaveLinx tilemount daylight sensor (includes control module, sensor, cable and tile mount)[6]

Notes:
1 Nominal Lumens will vary depending on selected distribution, color, driver and reflector finish.
2 Only available with Matte White, Matte metallic silver and Matte Black Finishes.
3 Available only on DC, DLC, D and DL.
4 Not available on DC or PIN.
5 Available matte white painted finish only. Flange designation should be blank.
6 D010TE, D5LT, DE010, Lutron, connected and emergency module drivers require accessible ceiling.
7 Flange is the same finish as reflector.
8 Order with 2LBSW Wall Wash trim.
9 DMX fixtures default to full on upon loss of DMX signal.

EATON

Eaton
1121 Highway 74 South
Peachtree City, GA 30269
P: 770-486-4800
www.eaton.com/lighting

Specifications and dimensions subject to change without notice.

LT-4

REBELLE ARCHITECTURAL LIGHTING

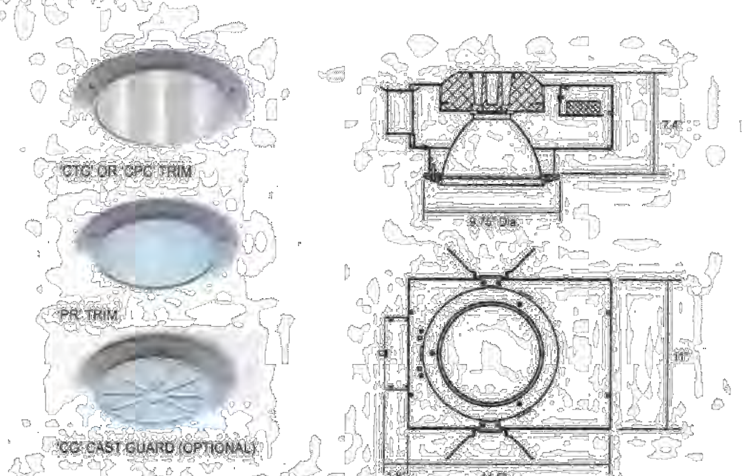

Sightlines 8000LED Vandal Resistant Recessed Downlight

EXTERIOR

MODEL	MOUNTING	LED MODULE	COLOR TEMPERATURE	VOLT	LENS	OPTIONS	TRIM COLOUR
8000	HC*	32L	40K*	120*	CPC*	CG	WT
		22L	30K	208	CTG	BH	BT
		16L	35K	240	PR	PH	SM
				277		TP	AN
						80	BZ
						90	GM
						EM	WS
							BM
							RAL

*Standard configuration unless otherwise specified Source nominal power

SAMPLE CATALOG NUMBER: 8000 - HC - 32L - 40K - 120 - CPC - WT
Using this catalog number would order 1 model 8000 recessed exterior luminaire for a hollow ceiling application with a COB LED light engine in 4000K and 70 CRI wired to 120 volts with a .188" clear polycarbonate lens and white texture paint on the trim.

CONSTRUCTION
Materials
Housing: Wiped, galvanized steel sheet. Trim: Pressure die cast aluminum. Reflector: Spun aluminum with diffuse ALZAK finish. Junction Box: Zinc plated steel. Lens: Clear polycarbonate, clear glass or prismatic (Solite) glass. Heat sink: cast aluminum. Fasteners: Hex drive, standard.

Electrical Components
Driver: Electronic, constant current, integral, 120-277V.
LED Module: COB 1208 or 1205, includes control leads for 0 - 10V dimming. 70 CRI standard.

MOUNTING
The 8000 series is for hollow ceilings, T-bar drywall or plaster. Units are provided with adjustable mounting hangers and are for non-insulated ceilings (non-IC). Insulation materials, if present, must be kept 3" away from housing. Junction box is suitable for thru-wiring with 4 no. 12 AWG through branch circuit conductors, suitable for 90°C (4IN / 4OUT).

OPTICAL
The 8000 series reflectors are precision formed from high purity aluminum. Finish is diffuse ALZAK as provided by Alux - Luxar.

PROTECTION
The 8000 series is listed for use in wet locations to UL and CSA Standards.

Trims are double gasketed to exclude contaminants from the reflector cavity to ensure longevity of optical performance.

The standard tamper resistant or optional tamper proof stainless steel fasteners secure trim to housing. Impact resistant polycarbonate or tempered glass lenses are provided and a cast guard is an optional extra.

LED life 50,000 hours, L70 @ 25°C ambient.

www.rebellelighting.com
© 2017 REBELLE All rights reserved. R17 Specifications subject to change without notice.

LT-4

REBELLE ARCHITECTURAL LIGHTING

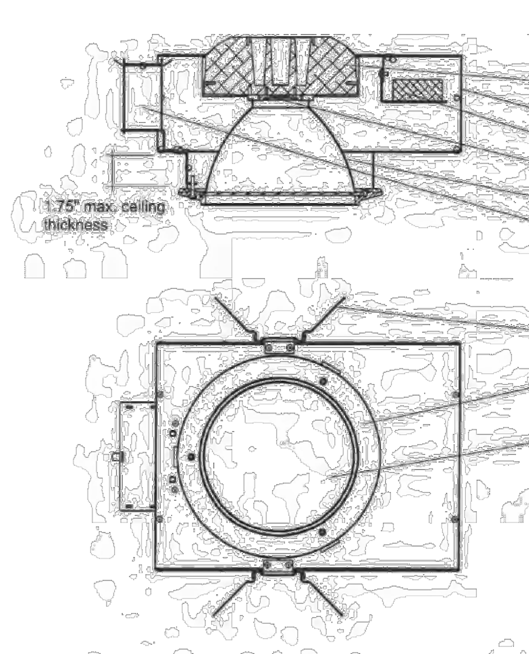

Sightlines 8000LED Detailed Product Description

Product	CCT	CRI*	Source Lumens	Delivered Lumens	LED Power (W)	System Power (W)	Lumens/Watt
8000-32L	3000/3500	70	4608	3456	31.65	37.68	92
8000-32L	4000	70	4921	3691	31.68	37.71	98
8000-22L	3000/3500	70	3180	2385	21.93	26.10	91
8000-22L	4000	70	3389	2542	21.94	26.12	97
8000-16L	3000/3500	70	2492	1869	15.61	18.58	101
8000-16L	4000	70	2638	1978	15.56	18.52	107

*Lumen Multiplier for CRI 80 use 0.91, CRI 90 use 0.78

www.rebellelighting.com
© 2017 REBELLE All rights reserved. R17 Specifications subject to change without notice.

GALVESTON COUNTY BEACH PAVILION
CRYSTAL BEACH, TX 77650

BE-Arc LLC Project No : C-13-007.01

Ibis Engineering
REG # F-11156
P.O. Box 55171
Galveston, Texas 77555
PH 409.621.6740

THIS PRINT IS THE PROPERTY OF IBIS ENGINEERING IT MUST NOT BE TRACED OR REPRODUCED IN ANY MANNER NOR SHALL IT BE SUBMITTED WITHOUT PRIOR WRITTEN CONSENT FROM IBIS ENGINEERING.

BRAX EASTERWOOD
DESIGN
2728 AVENUE Q SUITE 2
GALVESTON TEXAS 77550
PHONE 409-354-8976
EASTERWOOD@BEAIA.COM

FOR PERMIT

DATE	REVISION

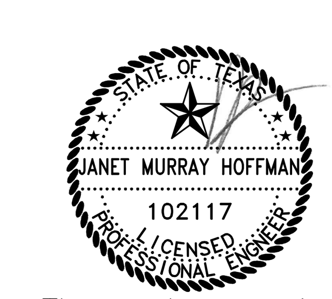

The seal appearing on this document was authorized by JANET MURRAY HOFFMAN P.E. 102117 12/7/2017

DESIGN DEVELOPMENT

DATE ISSUED:
12/7/2017

COPYRIGHT 2017

E4.0

LT-7A & 7AE

E-TR22L2 Series

LED Troffer - 2' x 2'
Replaces 2 x F32T8/U6

TROFFERS

Our popular LED Lay-In Troffers are new and improved! Enjoy the same fully-sealed durable steel construction of our previous models, a pre-installed and wired driver, and lower energy consumption (up to 40%).

Durable
- Made from 18 - 20 gauge steel
- Fully sealed construction keeps LEDs protected

Easy Install
- Pre-installed and wired driver
- Fits conventional grid ceilings

Recommended Use
- Offices
- Educational & retail
- Commercial & institutional

Input Voltage
- Universal (120V through 277V Operation)

Certifications

5 YEAR LIMITED WARRANTY · UL LISTED · Suitable for DAMP LOCATIONS · DLC QPL LISTED · DIMMABLE

e-conolight® | Making LED easy.

1501 96th Street, Sturtevant, WI 53177 | Phone (888) 243-9445 | Fax (262) 504-5409 | www.e-conolight.com

---

LT-5

ALCON LIGHTING

SHOP NOW >

Alcon Lighting **11142-4-W i66 Series** Architectural LED 4 Foot Linear Wall Mount Direct Light Fixture

FEATURES & SPECIFICATIONS

INTENDED USE
The **Alcon Lighting i66 Series Architectural LED Surface Mount Linear Lighting** fixtures bring clean lines and clear light to commercial LED or residential office lighting interiors. Our sleek, stylish fixtures offer highly effective and efficient lighting solutions for hotels, offices, retail outlets, restaurants, and more.

DETAILS
4 FT - W 6" x **L** 48" x **H** 6"
Construction: Die-formed and welded 22-gauge cold rolled steel
Lens: Snap In Frosted Acrylic Lens

ADDITIONAL FEATURES
Type: Direct Downlight
Voltage: 120-277
Wattage: 36W (2x18W)
Lumens: 4200 lms
CRI: 83
Listings: ETL and DLC for LED component only
LED lamp included

SPEC GRADE · DLC · 5 YEAR · ETL · TITLE 24 · UL

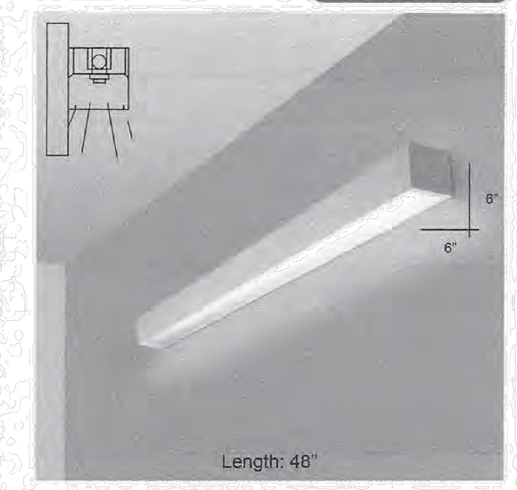

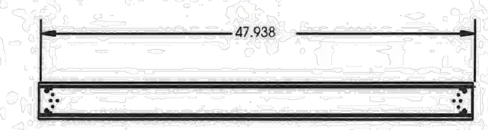

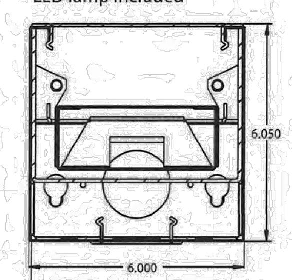

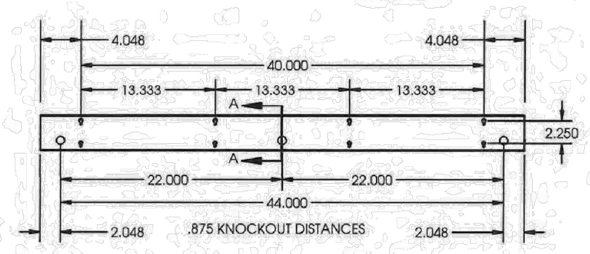

Ordering Information:

Example: (11142-4-W-40K-WH-2W-DS)

Model	Color Temp	Finish	Dimming	Options
11142-4-W Surface	35K 3500K 40K 4000K 50K 5000K	WH White BK Black SL Silver BR Bronze	Blank Non-Dimming (Standard) 2W 2-Wire Incandescent Dimming (120V only) (Title 24 Compliant)	CRWK Continuous Row Wire Kit EM[1] Emergency Backup Battery DS[1] Integrated Daylight Sensor

[1]Factory Installed

AlconLighting.com © 2017 2845 S. Robertson Blvd. Los Angeles, CA 90034 USA (877)733-5236 sales@alconlighting.com

---

LT-8

Half Moon 3000K LED Deck Light BBR

15764BBR30R (Bronzed Brass)

Project Name:
Location:
Type:
Qty:
Comments:

Ordering Information	
Product ID	15764BBR30R
Finish	Bronzed Brass
Available Finishes	AZT, AZT, BBR, BBR, WHT, WHT

Electrical	
Voltage	15V

Qualifications	
Safety Rated	Wet
Warranty	www.kichler.com/warranty

Primary Lamping	
Light Source	LED
Lamp Included	Not Included
Max or Nominal Watt	2.5W

Dimensions	
Height	2.00"
Width	4.00"

Kichler
7711 East Pleasant Valley Road
Cleveland, Ohio 44131-8010
Toll free: 866.558.5706 or kichler.com

Notes:
1) Information provided is subject to change without notice. All values are design or typical values when measured under laboratory conditions.
2) Incandescent Equivalent: The incandescent equivalent as presented is an approximate number and is for reference only.

KICHLER

LT-7A & 7AE

E-TR22L2 Series

TROFFERS

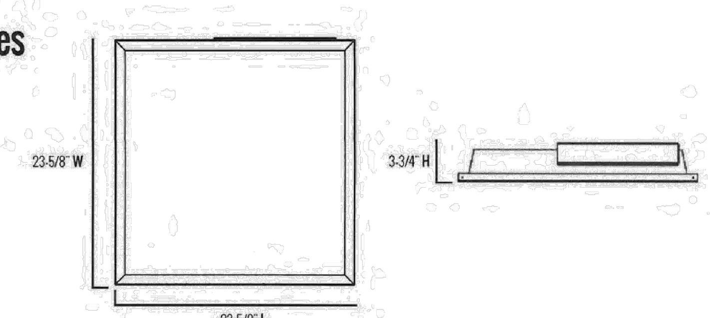

Series Overview

DIMENSIONS	PRODUCT WEIGHT	MOUNTING HEIGHT	SPACING
23-5/8" L x 23-5/8" W x 3-3/4" H	13.2 lbs.	---	---

Fixture Specifications

HOUSING	Durable steel construction White polyester powder-coat finish Sealed, maintenance-free fixture design
LENS ASSEMBLY	Precision engineered polystyrene diffuser prevents hot spots, shadows and glare, while providing uniform illumination
MOUNTING	Installs into conventional grid ceiling

Electrical Performance

OPERATING MINIMUM	LIFESPAN L_{70} AT 25°C (77°F)	POWER FACTOR	TOTAL HARMONIC DISTORTION	DIMMABLE
-18°C (0°F)	Estimated 60,000 Hours	> 0.9	< 20%	Yes
INPUT VOLTAGE	**120V**	**208V**	**240V**	**277V**
Current Draw (Amps)	0.32A	0.18A	0.16A	0.14A

Warranty & Certifications

WARRANTY	UL LISTED	DLC	IC-RATED
5-Year Limited	Damp Locations	Yes	For direct contact with insulation

CORRELATED COLOR TEMPERATURE (CCT)

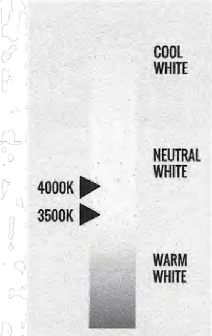

Output Specifications

SKU	LIGHT OUTPUT	COLOR TEMP (See chart)	POWER CONSUMPTION	COLOR ACCURACY	REPLACES
E-TR22L2383U	3700 Lumens	Warm White (3500K)	38W	≥ 80 CRI	2 x F32T8/U6
E-TR22L2384U	3800 Lumens	Neutral White (4000K)	38W	≥ 80 CRI	2 x F32T8/U6

Due to continuous product improvement, information in this document is subject to change.
Revision Date: 05/04/16
1501 96th Street, Sturtevant, WI 53177 | Phone (888) 243-9445 | Fax (262) 504-5409 | www.e-conolight.com

e-conolight®

LT-6

REBELLE ARCHITECTURAL LIGHTING

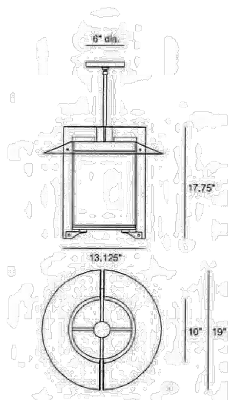

OFFICE

Orchestra Circle 2756PLED Maxi Pendant Mount

INTERIOR

MODEL	LED WATTS	COLOR TEMPERATURE	VOLT	SHIELD	DIFFUSER	DRIVER LOCATION	OPTIONS	COLOR
2756P	32L 2612 lumens¹ 32w LED/ 38w system	40 4000K 30 3000K 35 3500K	120* 208 240 277 347+	PF perforated liner	RF* frost CL clear	REM* remote driver INT integral driver	P(__") pendant length C86 ball aligner hanger WL wet location listing DIM dimming driver 90 90 CRI	WT white texture BT black texture SM silver metallic AN aluminum natural BZ bronze GM gunmetal WS white satin BM black matte RAL specify no.

*Standard configuration unless otherwise specified ¹Delivered lumens based on PF option and standard frost diffuser (4000K, 80 CRI) +Consult factory

SAMPLE CATALOG NUMBER: 2756P - 32L40 - 120 - RF - REM - WT
Using this catalog number would order 1 model 2756P maxi circle pendant with 4000K, 80 CRI LED light engine at 120 volts with frosted acrylic lens and remote mounted driver, painted with white texture polyester powder coat.

CONSTRUCTION

Materials
Support Frame: Heavy aluminum plate. Hinge/Lock up: Pressure die cast aluminum. Glare guard / Ceiling canopy / Reflector disk: Aluminum sheet, die formed. Diffusers (side): Thermo-formed acrylic. Bottom lens: Acrylic. Fasteners: Stainless steel.

Electrical Components
Driver: Constant current 900mA, 84% efficiency. Light engine: COB 1208 24mm x 20mm with a 15mm LES.

MOUNTING

This luminaire is designed to mount to a recessed 4" octagon j-box (by others). Remote mounted driver assemblies are standard (consult factory for lamp to driver distance). Optional integral driver assemblies are offered. For wet locations luminaire must be restrained from wind action. Special hanger or restraint required (by others).

OPTICAL

Luminaire has a choice of frost or clear lens and diffuser, with frost supplied as standard. The perforated liner is supplied if specified. The reflector disk is fixed in top position. Standard optic, Type V square (130°).

PROTECTION

The Orchestra maxi pendant is listed for use in damp locations to UL and CSA Standards. An optional wet location label can be provided.

LEDs are rated for 50,000 hour life with lumen maintenance >70% (L70).

www.rebellelighting.com
© 2016 REBELLE All rights reserved. R15 Specifications subject to change without notice.

LT-1

11/11/15

LED VAPOR TIGHT STRIP
48-WATT LED
(E-VW SERIES)

Applications: For use in car washes, airports, tunnels, stairwells and maintenance areas

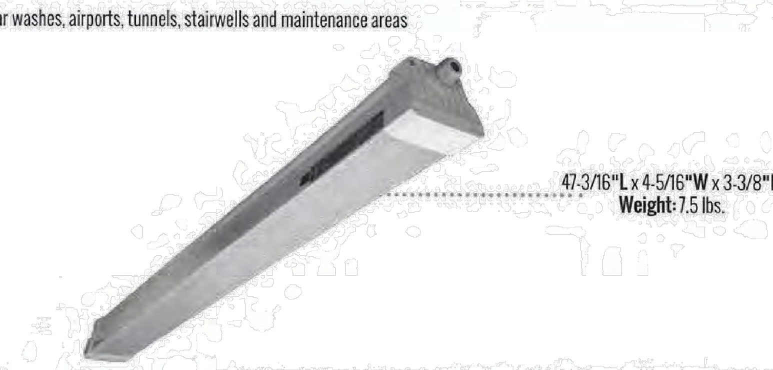

Catalog #	Description	Input Voltage	Initial Delivered Lumens	CCT	CRI	50K Hours Projected Lumen Maintenance Factor at 25°C[1]	Comparable To
E-VW4L04UCW	48W LED, Cool White	120V-277V	4700	5000K	82	82%	2-Lamp F32T8 Vapor Tight
E-VW4L04UNW	48W LED, Neutral White	120V-277V	4700	4000K	82	82%	2-Lamp F32T8 Vapor Tight

[1] Calculated L_{70} based on 9,000 hours of LM-80 testing: >54,000 hours

Performance
- Estimated 54,000 hours of maintenance-free operation to L_{70} at 25°C (77°F)
- -27°C (-17°F) minimum starting temperature
- 5-year limited warranty

Construction & Materials
- Extruded aluminum housing with gloss white polycarbonate corrosion resistant cover
- High-efficiency polycarbonate frosted diffuser is optically engineered to reduce glare and hotspots
- Can be surface mounted (mounting clips included) or suspended. Cable sold separately (E-ACSC5)

Electrical
- Non-dimmable
- 120V through 277V Operation
- Amperage Draw: 0.450A at 120V, 0.260A at 208V, 0.225A at 240V, 0.195A at 277V
- > 0.9 power factor
- < 20% total harmonic distortion

Regulatory
- UL Listed for wet locations
- IP66 Rated

Accessories:

CAT.# E-ACSC5 Mounting Safety Cable
Cable Length: 5', field adjustable.
Note: Requires 2 per fixture if used for mounting

e-conolight®

Due to continuous product improvement, information in this document is subject to change. All published photometric testing performed to IESNA LM-79-08 standards by a NVLAP certified laboratory. Fixture photometry was completed on a single representative fixture. Actual production units may vary up to ±10% of initial delivered lumens. Lumen maintenance values at 25°C (77°F) are calculated per TM-21 based on LM-80 data and in-situ fixture testing.
1501 96th Street, Sturtevant, WI 53177 | Phone (888)243-9445 | Fax (262)504-5409 | www.e-conolight.com

---

COUNTY APPROVAL:
SIGNATURE ______________________________ DATE____________

GALVESTON COUNTY
BEACH PAVILION
CRYSTAL BEACH, TX 77650

BE-Arc LLC Project No : C-13-007.01

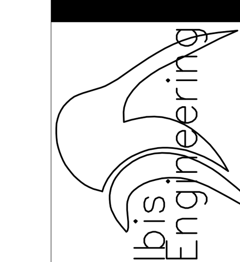

Ibis Engineering
REG # F-11156
P.O. Box 55171
Galveston, Texas 77555
PH 409.621.6740

THIS PRINT IS THE PROPERTY OF IBIS ENGINEERING IT MUST NOT BE TRACED OR REPRODUCED IN ANY MANNER NOR SHALL IT BE SUBMITTED WITHOUT PRIOR WRITTEN CONSENT FROM IBIS ENGINEERING.

BRAX EASTERWOOD
DESIGN
2728 AVENUE Q SUITE 2
GALVESTON TEXAS 77550
PHONE 409-354-8976
EASTERWOOD@BEAIA.COM

FOR PERMIT

DATE	REVISION

DESIGN DEVELOPMENT

DATE ISSUED:
12/7/2017

COPYRIGHT 2017

E4.1

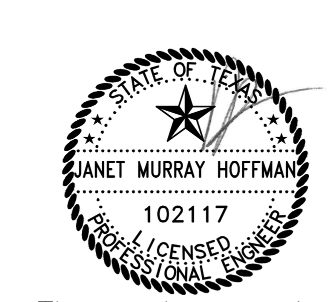

The seal appearing on this document was authorized by
JANET MURRAY HOFFMAN
P.E. 102117
12/7/2017